PETITION NO. 1602
HIGHLAND CHURCH OF CHRIST
11100 E. 7 MILE RD.
NEWPORT, MICHIGAN 48234
C/O DEACON DWIKE DOOLEY
PHONE NO. 313 587-1396

NORTH
BASED ON CITY OF DETROIT COORDINATE SYSTEM

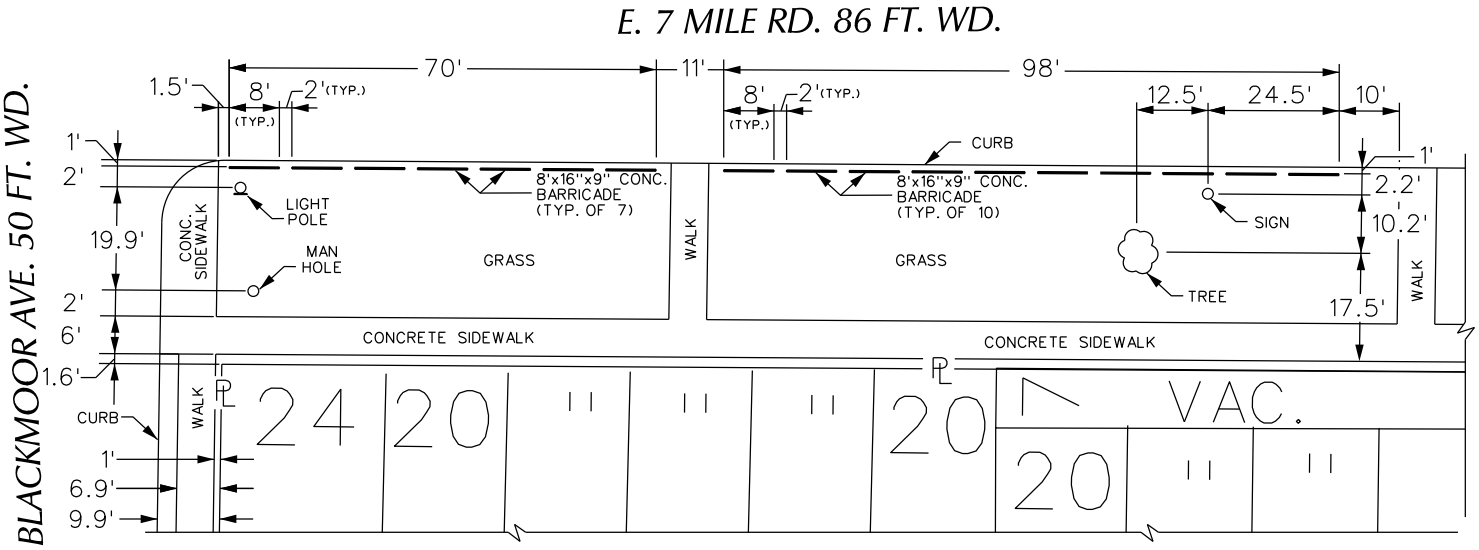

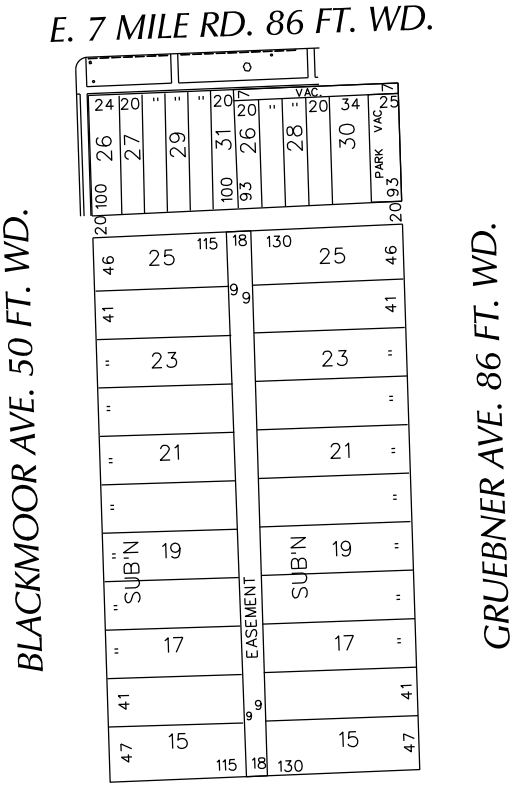

■ - REQUESTED BERM USE (Concrete Barriers)

CARTO 60 B

(FOR OFFICE USE ONLY)

B					
A					
DESCRIPTION		DRWN	CHKD	APPD	DATE
REVISIONS					
DRAWN BY WLW		CHECKED			
DATE 10-24-17		APPROVED			

REQUEST BERM USE (Concrete Barriers) INTO E. 7 MILE RD. AT 11100 E. 7 MILE RD.

CITY OF DETROIT
CITY ENGINEERING DEPARTMENT
SURVEY BUREAU

JOB NO. 01-01

DRWG. NO. X 1602