PETITION NO. 419
INTERSECTION CONSULTING GROUP
8120 E. JEFFERSON AVE.
DETROIT, MICHIGAN 48214
C/O BRIAN R. ELLISON
PHONE NO. 313 397-5863

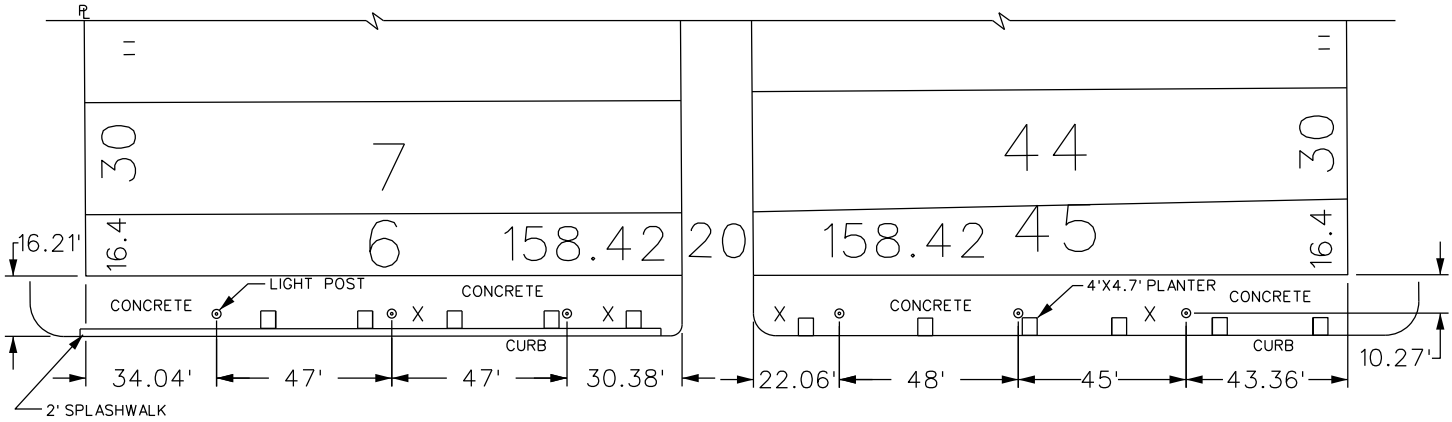

COE AVE. 60 FT. WD.

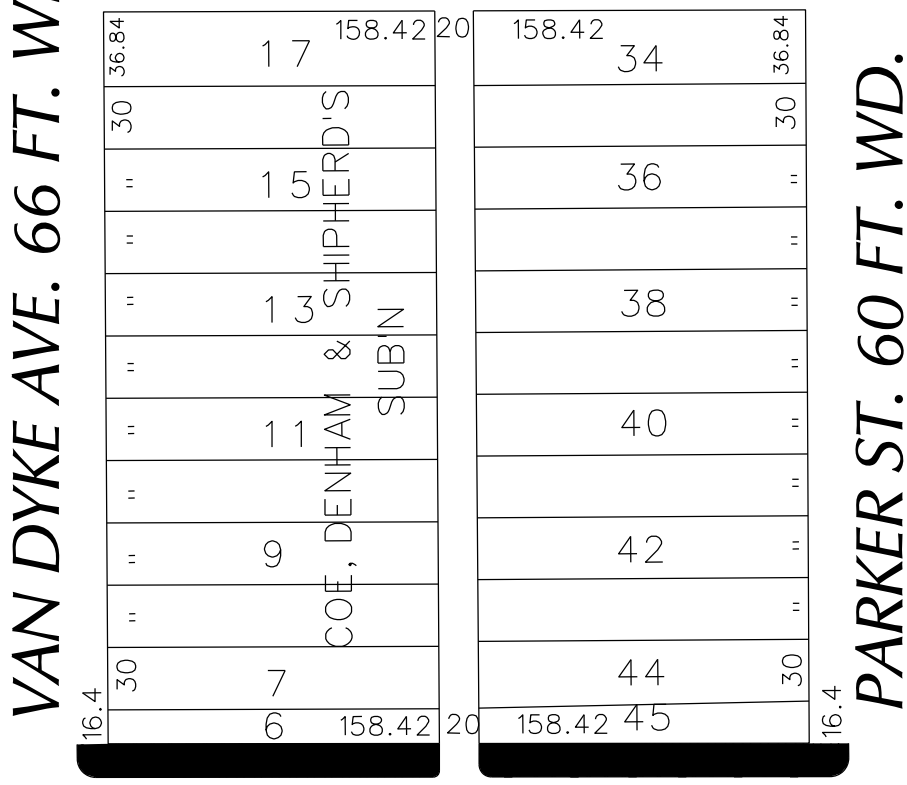

AGNES ST. 60 FT. WD.

LEGEND:
- X Proposed Bike Rack
- 4'x4.7' Planters
- Light pole

- REQUEST ENCROACHMENT (With Bike Racks)

CARTO 46 B

(FOR OFFICE USE ONLY)

B					
A					
DESCRIPTION		DRWN	CHKD	APPD	DATE
REVISIONS					
DRAWN BY WLW		CHECKED			
DATE 11-03-14		APPROVED			

REQUEST ENCROACHMENT
INTO THE NORTH SIDE OF AGNES AVE.
BETWEEN VAN DYKE AND PARKER AVE.
(With Bike Racks)

CITY OF DETROIT
CITY ENGINEERING DEPARTMENT
SURVEY BUREAU

JOB NO. 01-01

DRWG. NO. X 419