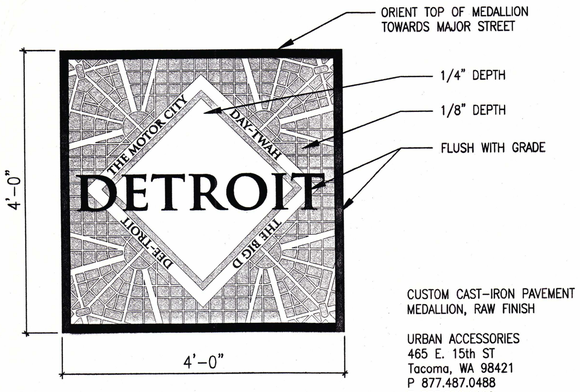

1 ENH-9 **PAVEMENT MEDALLION**
SCALE: 1"=1'-0"

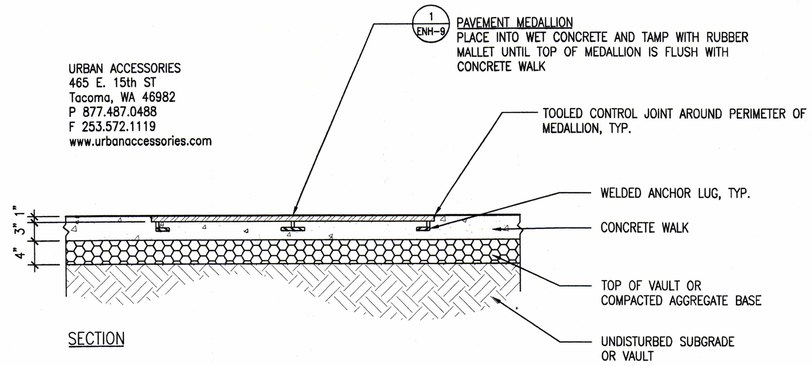

2 ENH-9 **PAVEMENT MEDALLION INSTALLATION**
1" = 1'-0"

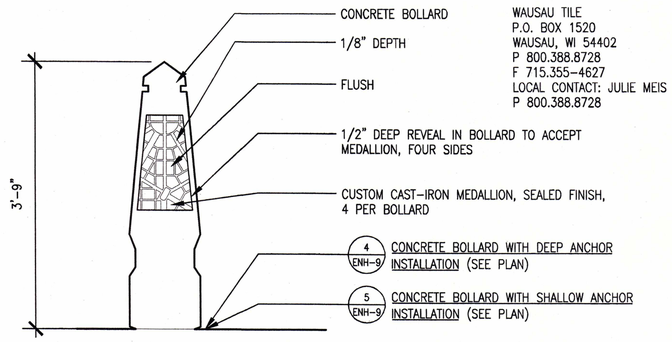

3 ENH-9 **CONCRETE BOLLARD WITH MEDALLION**
1" = 1'-0"

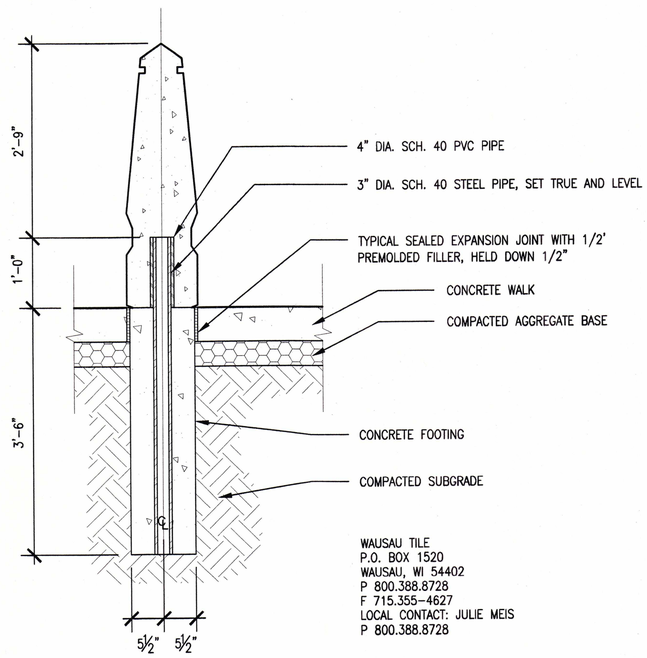

4 ENH-9 **CONCRETE BOLLARD WITH DEEP ANCHOR INSTALLATION**
1"=1'-0"

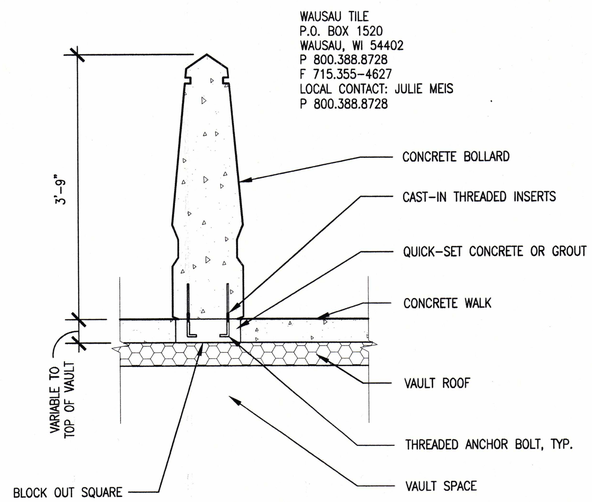

5 ENH-9 **CONCRETE BOLLARD WITH SHALLOW ANCHOR INSTALLATION**
1"=1'-0"

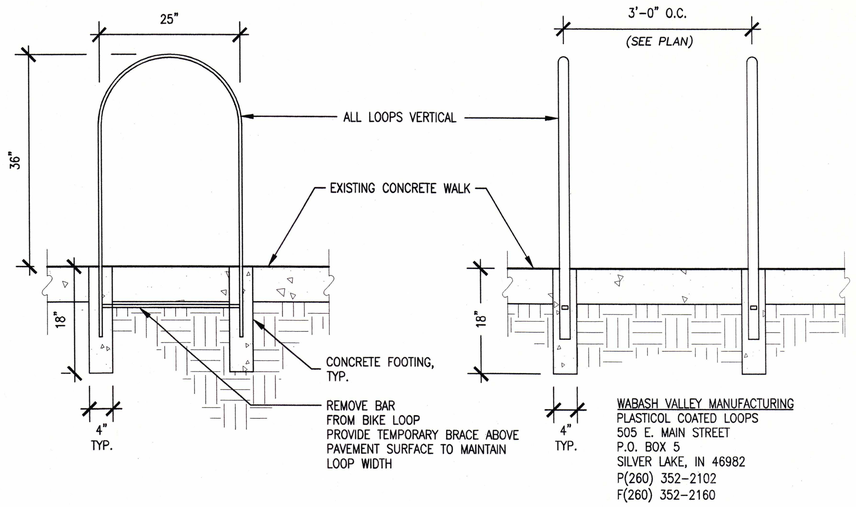

6 ENH-9 **BIKE LOOP INSTALLATION - EXISTING CONCRETE**
1"=1'-0"

AS-BUILT

	DESCRIPTION	CHK'D	APPV'D	DATE
F				
E				
D				
C				
B				
A				

REVISIONS

DRAWN BY: MS
DESIGNED BY: LS
CHECKED BY: BJ,DT
APPROVED BY: DT

LOWER WOODWARD CROSS STREETS IMPROVEMENTS
CITY OF DETROIT- DOWNTOWN DEVELOPMENT AUTHORITY

ENHANCEMENT
CONSTRUCTION DETAILS

SCALE: AS SHOWN DATE: 11-15-07

220 W. CONGRESS, SUITE 400
DETROIT, MI 48226
PHONE: (313) 967-4700
FAX: (313) 967-4707
www.spaldingdedecker.com

hamiltonanderson
Hamilton Anderson Associates
1435 Randolph Suite 200, Detroit, Michigan 48226
p 313 964 0270 f 313 964 0170
www.hamilton-anderson.com

NTH
480 Ford Field, 2000 Brush Street
Detroit, MI 48226
PHONE: (313) 237-3948
FAX: (313) 237-3909
www.nthconsultants.com

Consulting Engineering Associates, Inc
16580 Wyoming Avenue,
DETROIT, MI 48221-2882
PHONE: (313) 341-5797
FAX: (313) 341-0205
www.consulteng.com

UES
20349 Alderton Street, Suite 200
P.O. Box 19550
DETROIT, MI 48219-9550
PHONE: (313) 434-8282
FAX: (313) 537-7945
www.urbanengineeringsolutions.com

MANSELL
Mansell Associates, INC.
33608 Grand River
Farmington, MI 48335
PHONE: (248) 473-7070
FAX: (248) 473-8190

DDA
CITY OF DETROIT
DOWNTOWN DEVELOPMENT AUTHORITY
500 Griswold, Suite 2200,
Detroit, MI 48226
P: (313) 963-2940
F: (313) 963-8893

SECTION MAP	TOWN	RANGE	SECTION	PORTION CODE
-- - -- - --	-- - --	-- - --	-- - -- - --	-- - -- - --

M.D.P.H./D.N.R. PERMIT NO.
REF. NO. DE06001.OT
CONTRACT NO. ,
FILE NO. ,
DRAWING NO. ENH-9