CITY OF DETROIT
DEPARTMENT OF PUBLIC WORKS

IN CO-OPERATION WITH

MICHIGAN DEPARTMENT OF TRANSPORTATION

AND

FEDERAL HIGHWAY ADMINISTRATION

CONTROL SECTION NO. --------

JOB NO. ------

FEDERAL PROJECT NO. ----------

FEDERAL ITEM NO. ------

PLANS FOR PROPOSED

WILKINS ST OVER ABANDONED GTW RR (DEQUINDRE CUT): BRIDGE REPLACEMENT (S.N. 12493)

ADELAIDE ST OVER ABANDONED GTW RR (DEQUINDRE CUT): BRIDGE REPLACEMENT (S.N. 12446)

DIVISION ST OVER ABANDONED GTW RR (DEQUINDRE CUT): BRIDGE REPLACEMENT (S.N. 12467)

ALFRED ST OVER ABANDONED GTW RR (DEQUINDRE CUT): BRIDGE REMOVAL (S.N. 12447)

INDEX OF SHEETS

PROJ. SET SHEET NO.	BRIDGE SHEET NO.	
374	1	COVER SHEET

WILKINS BRIDGE (S.N. 12493)

375	2	DETOUR PLAN
376	3	EXISTING ROAD TYPICAL
377	4	TYPICAL PAVEMENT SECTION
378	5	ROAD REMOVAL PLAN
379	6	ROAD CONSTRUCTION PLAN
380	7	ROAD CONSTRUCTION PROFILES
381	8	PLAN OF SITE
382-384	9-11	LOG OF BORINGS
385	12	GENERAL PLAN OF STRUCTURE
386	13	GENERAL PLAN OF STRUCTURE DETAILS
387-389	14-16	REMOVAL PLANS
390	17	PILE PLAN
391	18	PILE DETAILS
392	19	FOOTING PLAN
393	20	SILL WALL PLAN
394	21	SILL WALL DETAILS
395-396	22-23	WINGWALL DETAILS
397	24	PRECAST CONCRETE PLAN AND DETAILS
398	25	SUPERSTRUCTURE DETAILS
399-400	26-27	PEDESTRIAN FENCE DETAILS
401	28	RETAINING WALL REHAB PLAN AND DETAILS
402	29	PLD/DWSD PLANS AND DETAILS
403	30	STREET LIGHTING PLAN
404	31	PLD STANDARD PLAN SHEET - HANDHOLES
405-407	32-34	DWSD STANDARD DETAILS
408	35	BILL OF MATERIALS/STEEL REINFORCEMENT

ADELAIDE BRIDGE (S.N. 12446)

409	2	DETOUR PLAN
410	3	EXISTING ROAD TYPICAL
411	4	TYPICAL PAVEMENT SECTION
412	5	ROAD REMOVAL PLAN
413	6	ROAD CONSTRUCTION PLAN
414	7	ROAD CONSTRUCTION PROFILES
415	8	PLAN OF SITE
416	9	GRADING DETAIL SHEET
417-419	10-12	LOG OF BORINGS
420	13	GENERAL PLAN OF STRUCTURE
421	14	GENERAL PLAN OF STRUCTURE DETAILS
422-424	15-17	REMOVAL PLANS
425	18	PILE PLAN
426	19	PILE DETAILS PLAN
427	20	FOOTING PLAN
428	21	SILL WALL PLAN
429	22	SILL WALL DETAILS
430-431	23-24	WALL DETAILS
432	25	PRECAST CONCRETE PLAN AND DETAILS
433	26	SUPERSTRUCTURE DETAILS
434-435	27-28	PEDESTRIAN FENCE DETAILS
436	29	PLD/DWSD PLANS AND DETAILS
437	30	PLD STANDARD PLAN SHEET - HANDHOLES
438-440	31-33	DWSD STANDARD DETAIL SHEET
441	34	BILL OF MATERIALS/STEEL REINFORCEMENT

DIVISION BRIDGE (S.N. 12467)

442	2	DETOUR PLAN
443	3	EXISTING ROAD TYPICAL
444	4	TYPICAL PAVEMENT SECTION
445	5	ROAD REMOVAL PLAN
446	6	ROAD CONSTRUCTION PLAN
447	7	ROAD CONSTRUCTION PROFILES
448	8	PLAN OF SITE
449-451	9-11	LOG OF BORINGS
452	12	GENERAL PLAN OF STRUCTURE
453	13	GENERAL PLAN OF STRUCTURE DETAILS
454-457	14-17	REMOVAL SHEETS
458	18	PILE PLAN
459	19	PILE DETAILS
460	20	FOOTING PLAN
461	21	SILL WALL PLAN
462	22	SILL WALL DETAILS
463-464	23-24	WALL DETAILS
465	25	PRECAST CONCRETE PLAN AND DETAILS
466	26	SUPERSTRUCTURE DETAILS
467-468	27-28	PEDESTRIAN FENCE DETAILS
469	29	PLD/DWSD PLANS AND DETAILS
470	30	PLD STANDARD PLAN SHEET - HANDHOLES
471-473	31-33	DWSD STANDARD DETAIL SHEET
474	34	BILL OF MATERIALS/STEEL REINFORCEMENT

ALFRED BRIDGE (S.N. 12447)

475	2	DETOUR PLAN
476	3	GENERAL PLAN OF SITE
477	4	GENERAL PLAN OF SITE DETAILS
478	5	GENERAL PLAN OF STRUCTURE
479-481	6-8	EXISTING PLAN (REM)
482	9	EXISTING PLAN-INFO ONLY
483	10	SUPERSTRUCTURE DETAILS
484	11	RAILING DETAILS
485-486	12-13	PEDESTRIAN FENCE DETAILS
487	14	PLD PLAN
488	15	PLD STANDARD DETAILS - HANDHOLES
489	16	BILL OF MATERIALS/STEEL REINFORCEMENT

AREA MAP

GENERAL NOTES

THE RECONSTRUCTION DESIGN IS BASED ON 1.2 TIMES THE CURRENT AASHTO LRFD BRIDGE DESIGN SPECIFICATION HL-93 LOADING WITH THE EXCEPTION THAT THE DESIGN TANDEM PORTION OF THE HL-93 LOAD DEFINITION SHALL BE REPLACED BY THE SINGLE 60 KIP AXLE LOAD BEFORE APPLICATION OF THIS 1.2 FACTOR. THE RESULTING LOAD IS DESIGNATED HL-93 MOD. LIVE LOAD PLUS DYNAMIC LOAD ALLOWANCE DEFLECTION DOES NOT EXCEED 1/1000 OF SPAN LENGTH.

EXCEPT WHERE OTHERWISE INDICATED ON THESE PLANS, OR IN THE PROPOSAL AND SUPPLEMENTAL SPECIFICATIONS CONTAINED HEREIN, ALL MATERIALS AND WORKMANSHIP SHALL BE ACCORDING TO THE MICHIGAN DEPARTMENT OF TRANSPORTATION STANDARD SPECIFICATIONS FOR CONSTRUCTION 2012 EDITION.

THE DESIGN OF THE STRUCTURAL MEMBERS ARE BASED ON MATERIAL OF THE FOLLOWING GRADES AND STRESSES:

CONCRETE: GRADE S2	FC=3,000 PSI
CONCRETE: GRADE D	FC=4,000 PSI
STEEL REINFORCEMENT	FY=60,000 PSI

ESTIMATED TRAFFIC DISTRIBUTION

AVERAGE DAILY TRAFFIC	SEE PLAN OF SITE SHEETS
FUTURE ADT (2023)	SEE PLAN OF SITE SHEETS
DESIGN HOURLY VOLUME	COMMERCIAL
10%	
POSTED SPEED	25 MPH
DESIGN SPEED	30 MPH

ALL EXPOSED CONCRETE CORNERS SHOWN SQUARE ON THE PLANS SHALL BE BEVELED WITH 1/2" TRIANGULAR MOLDINGS EXCEPT AS OTHERWISE NOTED.

BIDDERS WILL BE FURNISHED WITH SCANNED IMAGES OF PLAN SHEETS OF THE EXISTING STRUCTURES IF REQUESTED.

THE DESIGN OF THE FOUNDATION PILING IS BASED ON MATERIAL OF THE FOLLOWING GRADES AND STRESSES (AND LOSSES):
FOUNDATION PILING (STEEL H-PILING):
AASHTO M270
GRADE 50 FY=50,000 PSI

UNLESS OTHERWISE SHOWN ON THE PLANS PROVIDE MINIMUM CONCRETE CLEAR COVER FOR REINFORCEMENT ACCORDING TO THE FOLLOWING:

CONCRETE CAST AGAINST EARTH:	3 IN
PRECAST CONCRETE:	1 IN
ALL OTHER UNLESS SHOWN ON PLANS:	2 IN

THE BRIDGE DECK SURFACES HAVE AN HMA OVERLAY, HMA CAP OR HMA PATCHES. REMOVAL OF HMA AS A RESULT OF REMOVAL OF OTHER SUPERSTRUCTURE ITEMS SHALL BE INCLUDED IN THE REMOVAL OF THOSE ITEMS.

THE IMPROVEMENTS COVERED BY THESE PLANS SHALL BE DONE IN ACCORDANCE WITH THE MICHIGAN DEPARTMENT OF TRANSPORTATION 2012 STANDARD SPECIFICATIONS FOR CONSTRUCTION.

UTILITY CONTACT INFORMATION

CITY OF DETROIT PLD 9449 GRINNELL DETROIT, MI 48213 MICHAEL LASKOWSKI (313) 267-7306	STREET LIGHTING
CITY OF DETROIT DWSD J MADISON BLDG. 1420 WASHINGTON BLVD. DETROIT, MI 48226 GANG SONG (313) 967-1508	WATER MAINS & SEWERS
CITY OF DETROIT TRAFFIC ENGINEERING, D.P.W. 2633 MICHIGAN AVENUE DETROIT, MI 48207 ASHOK PATEL (313) 224-1610	PAVEMENT MARKINGS, SIGNS & TRAFFIC SIGNALS
DTE, DETROIT EDISON ONE ENERGY PLAZA DO REGIONAL PLANNING SE SUP ENG OSB DETROIT, MI 48226 ERIK SMITH (313) 235-4414	ELECTRIC POWER
DTE, MICHIGAN CONSOLIDATED GAS COMPANY 17150 ALLEN RD MELVINDALE, MI 48122 LAURIE FORRESTER (313) 389-7261	GAS MAIN
AT&T 17651 MICHIGAN AVE DEARBORN, MI 48126 DAVID HARDAWAY (313) 240-5541	TELEPHONE
DETROIT THERMAL LLC 3575 E PALMER ST DETROIT, MI 48201 ED LAROSA (313) 921-1922	STEAM LINES
COMCAST CABLEVISION 25626 TELEGRAPH RD SOUTHFIELD, MI 48034 GLEN YOUNGLOVE (248) 809-2712	TV CABLE
ITC TRANSMISSION 27175 ENERGY DRIVE NOVI, MI 48377 ROD LEWIS (248) 946-3238	120 KV PRIM U/G

WADETRIM
500 Griswold, Suite 2500
Detroit, MI 48226
313.961.3650
FAX: 313.961.0898
www.wadetrim.com
Building relationships on a foundation of excellence

Drawn		Date:
Checked		CEA File Name
Approved		
		File No.
		Job No.
Approved		
		File No.
Approved		

CONTRACT FOR 3 BRIDGE REPLACEMENTS & 1 BRIDGE REMOVAL

LOCAL AUTHORITY APPROVAL
CITY OF DETROIT
CITY ENGINEERING DEPARTMENT
DEPARTMENT OF PUBLIC WORKS

APPROVED BY _____ HEAD ENGINEER _____ DATE

APPROVED BY _____ CITY ENGINEER _____ DATE 4/26/13

PREPARED UNDER THE SUPERVISION OF

STATE OF MICHIGAN
ROBERT BREEN
ENGINEER
No. 28033
LICENSED PROFESSIONAL ENGINEER

ROBERT R. BREEN, PE — LICENSE # 6201028033 — DATE 5/21/13

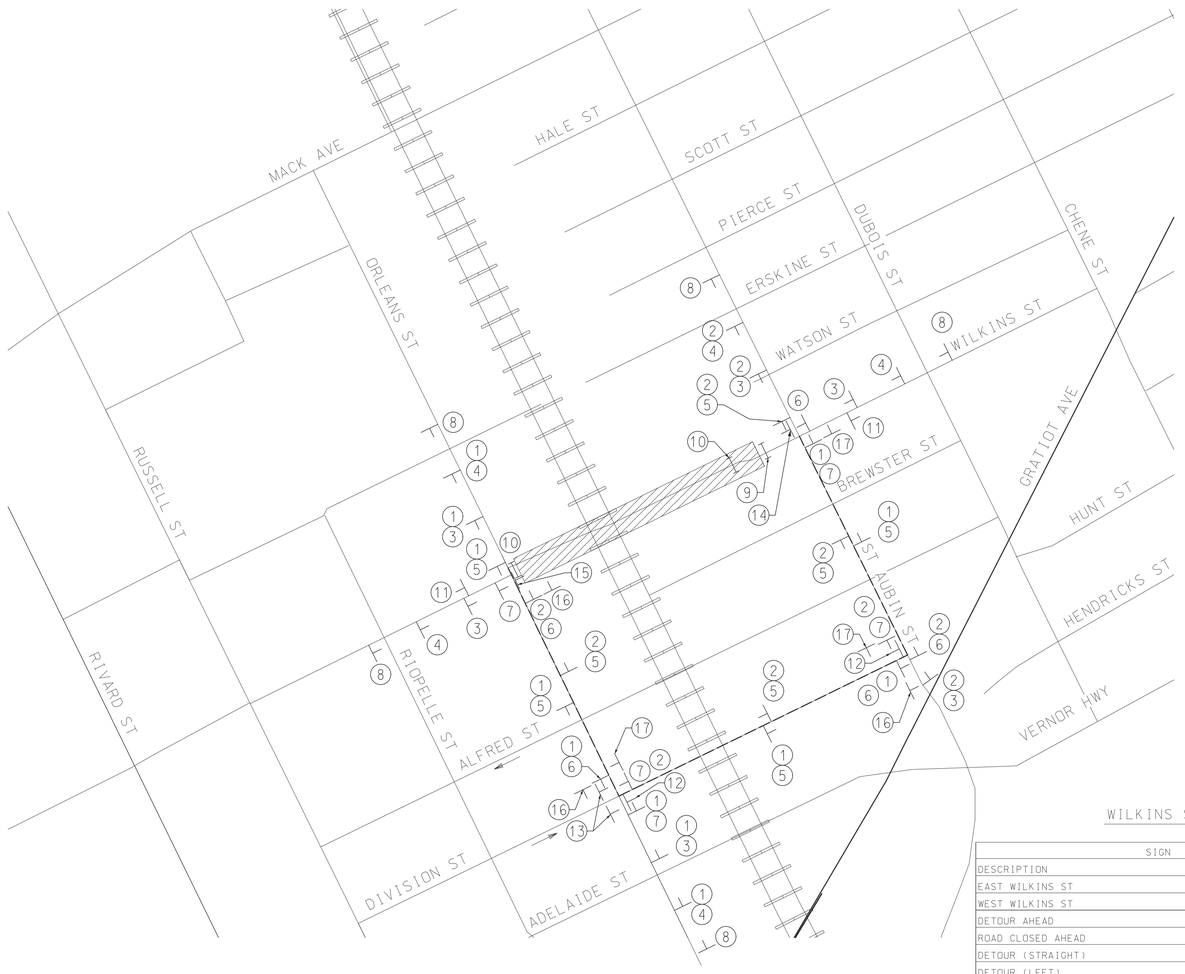

PLAN

1	E WILKINS ST	SPECIAL SIGN #1	9	ROAD CLOSED TO THRU TRAFFIC 1-TYPE III BARRICADE	R11-4
2	W WILKINS ST	SPECIAL SIGN #2	10	ROAD CLOSED 7-TYPE III BARRICADES	R11-2
3	DETOUR AHEAD	W20-2	11	END DETOUR	M4-8a
4	ROAD CLOSED AHEAD	W20-3	12	TWO WAY TRAFFIC	W6-3a
5	DETOUR ⇧	M4-9a	13	END ONE WAY	R6-7
6	DETOUR ⇦	M4-9(L)	14	SIDEWALK CLOSED AHEAD ⇦ CROSS HERE 1-TYPE III BARRICADE	R9-11(L)
7	DETOUR ⇨	M4-9(R)	15	SIDEWALK CLOSED AHEAD ⇨ CROSS HERE 1-TYPE III BARRICADE	R9-11(R)
8	WILKINS ST CLOSED ORLEANS ST TO ST AUBIN	SPECIAL SIGN #3	16	DETOUR ⇦ M4-9b(L)	
			17	DETOUR ⇨ M4-9b(R)	
				WORK ZONE BEGINS R5-18c	
				END ROAD WORK G20-2	

WILKINS STREET DETOUR SIGNING QUANTITIES

SIGN			SIZE(in X in)		AREA	TOTAL	TOTAL
DESCRIPTION	CODE	TYPE	IN	IN	SQ FT	QTY	AREA
EAST WILKINS ST	SPECIAL SIGN #1	B	48	12	4.0	15	60
WEST WILKINS ST	SPECIAL SIGN #2	B	48	12	4.0	14	56
DETOUR AHEAD	W20-2	B	48	48	16.0	6	96
ROAD CLOSED AHEAD	W20-3	B	48	48	16.0	5	80
DETOUR (STRAIGHT)	M4-9a	B	30	24	5.0	8	40
DETOUR (LEFT)	M4-9(L)	B	30	24	5.0	5	25
DETOUR (RIGHT)	M4-9(R)	B	30	24	5.0	5	25
WILKINS ST CLOSED ORLEANS ST TO ST AUBIN	SPECIAL SIGN #3	B	48	42	14.0	5	70
WORK ZONE BEGINS	R5-18c	B	48	48	16.0	2	32
END ROAD WORK	G20-2	B	36	16	4.0	2	8
ROAD CLOSED TO THRU TRAFFIC	R11-4	B	60	30	12.5	1	13
ROAD CLOSED	R11-2	B	48	30	10.0	2	20
END DETOUR	M4-8a	B	30	24	5.0	2	10
TWO WAY TRAFFIC	W6-3a	B	48	48	16.0	2	32
END ONE WAY	R6-7	B	24	30	5.0	2	10
SIDEWALK CLOSED AHEAD CROSS HERE (LEFT)	R9-11(L)	B	24	12	2.0	1	2
SIDEWALK CLOSED AHEAD CROSS HERE (RIGHT)	R9-11(R)	B	24	12	2.0	1	2
PEDESTRIAN DETOUR (LEFT)	M4-9b(L)	B	30	24	5.0	3	15
PEDESTRIAN DETOUR (RIGHT)	M4-9b(R)	B	30	24	5.0	3	15
SIGN. TYPE B. TEMP. PRISMATIC. FURN						50	476
SIGN. TYPE B. TEMP. PRISMATIC. OPER							428
SIGN. TYPE B. TEMP. PRISMATIC. SPECIAL. FURN						34	205
SIGN. TYPE B. TEMP. PRISMATIC. SPECIAL. OPER							186

		QTY
BARRICADE. TYPE III. HIGH INTENSITY. FURN	EA	18
BARRICADE. TYPE III. HIGH INTENSITY. OPER	EA	18
MINOR TRAF DEVICES (SN 12493)	LS	1

MAINTAINING TRAFFIC NOTES

1. ALL TEMPORARY CONSTRUCTION TRAFFIC APPURTENANCES. SUCH AS BARRICADES NECESSARY FOR CONSTRUCTION SHALL CONFORM TO THE 2011 MICHIGAN MANUAL OF UNIFORM TRAFFIC CONTROL DEVICES.
2. ALL CONSTRUCTION APPURTENANCES SHALL BE IN PLACE PRIOR TO THE START OF CONSTRUCTION ACTIVITIES. EXISTING SIGNS IN CONFLICT WITH THE TEMPORARY CONSTRUCTION TRAFFIC SIGNS SHALL BE COVERED OR TEMPORARILY RESET OR REMOVED AND STOCKPILED DURING CONSTRUCTION.
3. THE CONTRACTOR SHALL NOTIFY THE CITY OF DETROIT POLICE AND FIRE DEPARTMENTS IN WRITING A MINIMUM OF TEN WORKING DAYS PRIOR TO THE START OF CONSTRUCTION ON ANY ROAD CLOSURES.
4. LOCAL STREETS ADJACENT TO THE CONSTRUCTION AREA SHALL NOT BE USED BY THE CONTRACTOR FOR EQUIPMENT AND MATERIAL STORAGE.
5. THE CONTRACTOR SHALL SUBMIT A PLAN TO THE ENGINEER FOR APPROVAL FOR TRUCK OR HAUL ROUTES TO BE USED DURING CONSTRUCTION.
6. THE CONTRACTOR SHALL NOTIFY ADJACENT BUSINESSES IN WRITING A MINIMUM OF TEN WORKING DAYS PRIOR TO PAVEMENT REMOVAL OR ANY PLANNED CONSTRUCTION THAT MAY LIMIT OR TEMPORARILY ELIMINATE ACCESS TO THEIR PROPERTY.
7. ALL CONSTRUCTION ACTIVITIES SHALL TAKE PLACE BETWEEN THE HOURS OF 7:00 A.M. AND 7:00 P.M. MONDAY THROUGH SATURDAY. NO CONSTRUCTION ACTIVITIES. INCLUDING PAVEMENT SAW CUTTING WILL BE ALLOWED ON SUNDAYS. AND MONDAY THROUGH SATURDAY BETWEEN THE HOURS OF 7:00 P.M. AND 7:00 A.M. THE CONTRACTOR MAY REQUEST AN EXTENSION OF WORK HOURS. ANY EXTENSION OF WORK HOURS IS AT THE DISCRETION OF THE CITY OF DETROIT. CITY ENGINEERS OFFICE.
8. PLACE R5-18c AND G20-2 AT ORLEANS AND ST. AUBIN AS DIRECTED BY THE ENGINEER

E WILKINS ST — D3-1; 1.63" Radius, 0.38" Border, 0.63" Indent, Black on Orange; [E WILKINS ST] C;

SPECIAL SIGN #1 DETAIL

W WILKINS ST — D3-1; 1.63" Radius, 0.38" Border, 0.63" Indent, Black on Orange; [W WILKINS ST] C;

SPECIAL SIGN #2 DETAIL

WILKINS ST CLOSED ORLEANS ST TO ST AUBIN

W-VAR: 1.6" Radius, 0.9" Border, 0.6" Indent, Black on Orange; [WILKINS] C; [ST] C; [CLOSED] C; [ORLEANS] C; [ST] C; [TO] C; [ST] C; [AUBIN] C; Table of letter and object lefts.

SPECIAL SIGN #8 DETAIL

LEGEND

- DETOUR ROUTE
- (1) SIGN CLUSTER NUMBER
- TYPE III BARRICADE
- WORK ZONE
- ONE-WAY STREET (FLOW OF TRAFFIC)

REV #	DATE	DESCRIPTION	BY

NOT VALID FOR CONSTRUCTION UNLESS SIGNED AND DATED

WADETRIM
500 Griswold, Suite 2500
Detroit, MI 48226
PH: 313.962.7800
FAX: 313.961.0888
www.wadetrim.com

Building relationships on a foundation of excellence.

CITY OF DETROIT
DEPARTMENT OF PUBLIC WORKS
CITY ENGINEERING DIVISION
WILKINS ST. OVER DEQUINDRE CUT S.N. 12493
DETOUR PLAN

ISSUED FOR: DATE: BY:

JOB NO. DTE 2025-08T

SHEET 2 (375)

WILKINS STREET BRIDGE

© Wade Trim Group, Inc.

PROJECT MANAGER: - FIELD BOOK INFORMATION: -
C:\Sw_work\cometona\60350142\CRP-PLTS\detourplan.dgn
PLOTTED 5/21/2013 9:49:51 AM BY Cometona

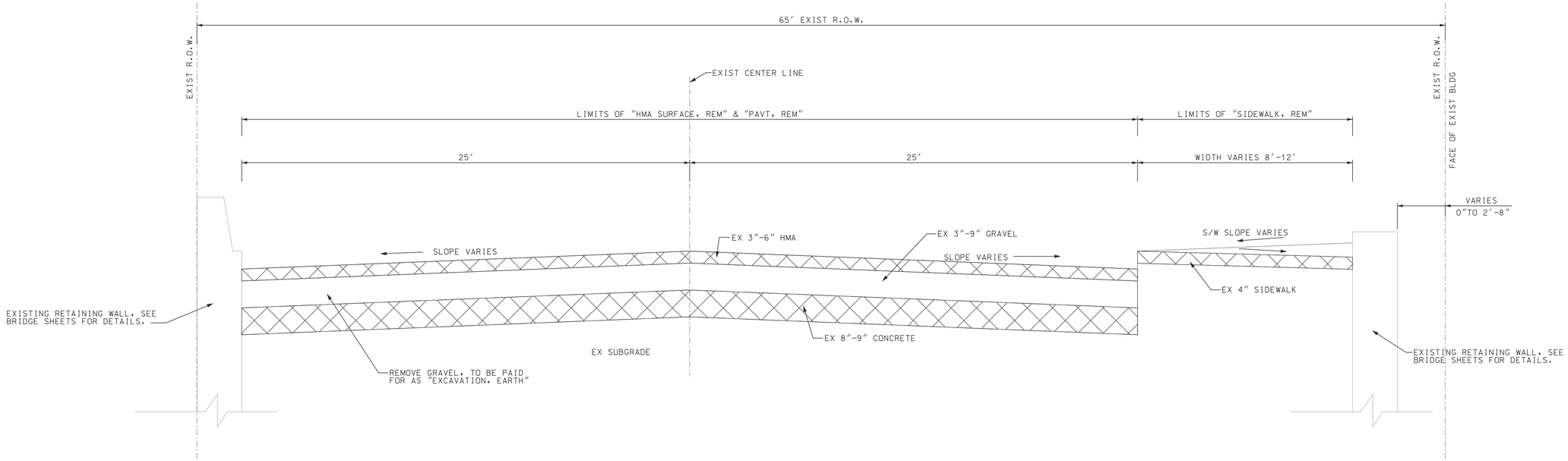

EXISTING TYPICAL CROSS SECTION

STA 195+59.50 TO STA 197+99.68
STA 198+61.18 TO STA 202+92.84

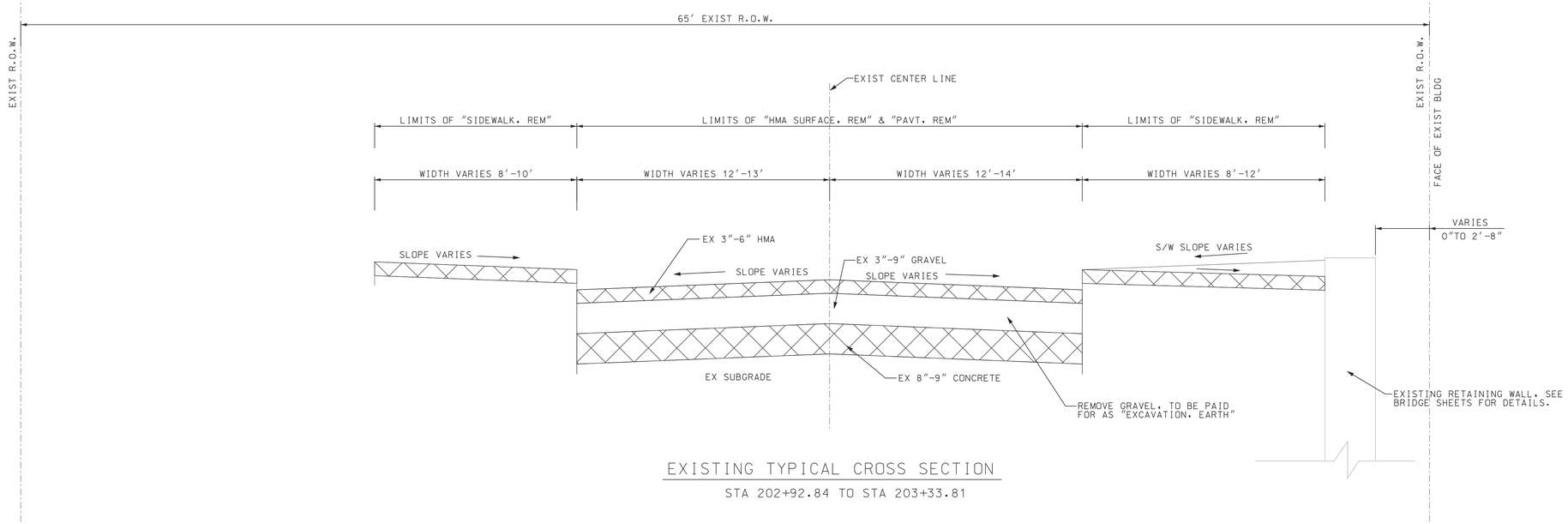

EXISTING TYPICAL CROSS SECTION

STA 202+92.84 TO STA 203+33.81

REV #	DATE	DESCRIPTION	BY

NOT VALID FOR CONSTRUCTION UNLESS SIGNED AND DATED

WADETRIM
500 Griswold, Suite 2500
Detroit, MI 48226
313.961.3650
FAX 313.961.0898
www.wadetrim.com

Building relationships on a foundation of excellence

CITY OF DETROIT
DEPARTMENT OF PUBLIC WORKS
CITY ENGINEERING DIVISION
WILKINS ST OVER DEQUINDRE CUT S.N. 12493
EXISTING ROAD TYPICAL

ISSUED FOR: DATE: BY:

JOB NO. DTE 2025-08T

SHEET 3 (376)

WILKINS STREET BRIDGE

© Wade Trim Group, Inc.

PROJECT MANAGER: FIELD BOOK INFORMATION: -
c:\pw_work\corretjorge\d0350142\CTP-PLTS Existingroad Typicals.dgn
PLOTTED 5/21/2013 9:54:45 AM BY Corretjorge

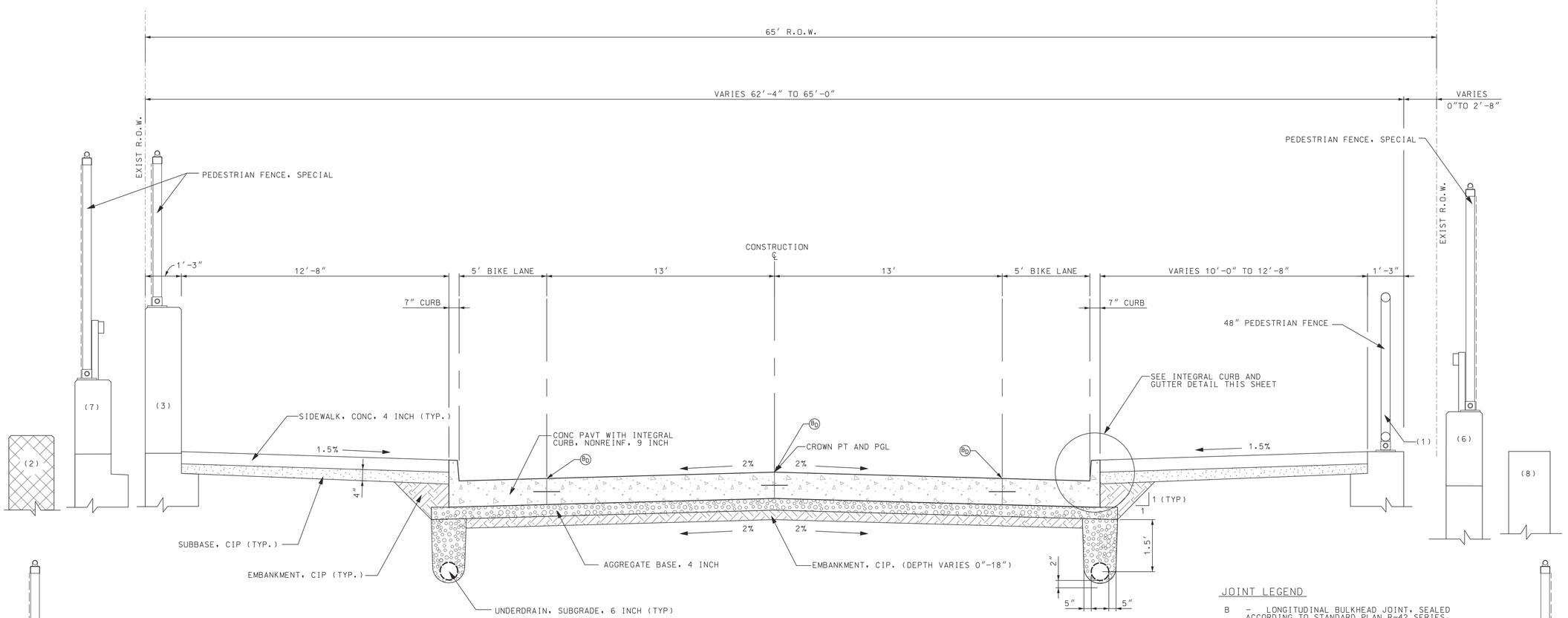

PROPOSED TYPICAL PAVEMENT SECTION

STA 195+59.50 TO STA 202+63.00
NOT TO SCALE

JOINT LEGEND

B – LONGITUDINAL BULKHEAD JOINT, SEALED ACCORDING TO STANDARD PLAN R-42 SERIES, SYMBOL (B)

D – LONGITUDINAL LANE TIE JOINT WITH TIE BARS, SEALED ACCORDING TO STANDARD PLAN R-42 SERIES, SYMBOL (D)

NOTES:

(1) EXIST RETAINING WALL W/ 48″ PEDESTRIAN FENCE STA 195+59.50 TO STA 197+93.43

(2) EXIST WALL REMOVED, FLUSH WITH GRADE – FROM STA 195+59.50 TO STA 195+79.50

(3) EXIST RETAINING WALL W/ 3′-8½″ BARRIER AND PEDESTRIAN FENCE STA 195+79.51 TO STA 197+93.43 & STA 198+86.43 TO STA 202+20.00

(4) PRECAST WALL W/ 3′-8½″ BARRIER AND PEDESTRIAN FENCE STA 197+93.43 TO STA 198+04.07 AND STA 198+68.18 TO STA 198+86.43

(5) PRECAST WALL W/ 3′-8½″ BARRIER AND PEDESTRIAN FENCE STA 197+93.43 TO STA 197+99.68 AND STA 198+68.18 TO STA 198+86.43

(6) @ BRIDGE – AESTHETIC PARAPET TUBE RAIL W/ PEDESTRIAN FENCE STA 198+04.07 TO STA 198+68.18

(7) @ BRIDGE – AESTHETIC PARAPET TUBE RAIL W/ PEDESTRIAN FENCE STA 197+99.68 TO STA 198+68.18

(8) NO BARRIER. FLUSH WITH GRADE STA 198+86.43 TO STA 203+33.51

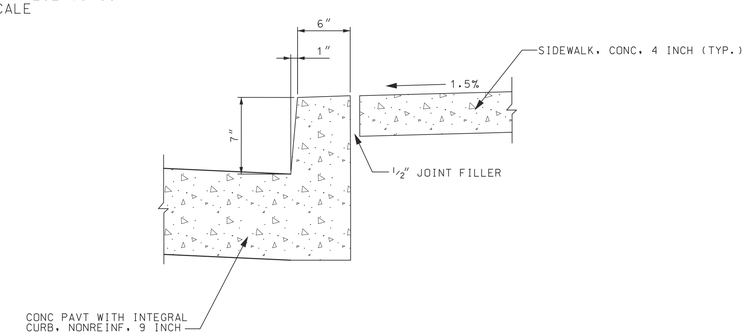

INTEGRAL CURB AND GUTTER, NONREINF, 9 INCH

REV#	DATE	DESCRIPTION	BY

NOT VALID FOR CONSTRUCTION UNLESS "SIGNED AND DATED"

WADETRIM
500 Griswold, Suite 2500
Detroit, MI 48226
TEL 313.961.1830
FAX 313.961.0898
www.wadetrim.com

Building relationships on a foundation of excellence

CITY OF DETROIT
DEPARTMENT OF PUBLIC WORKS
CITY ENGINEERING DIVISION
WILKINS ST OVER DEQUINDRE CUT S.N. 12493
TYPICAL PAVEMENT SECTION

ISSUED FOR: DATE: BY:

JOB NO. DTE 2025-08T

SHEET 4 (377)

WILKINS STREET BRIDGE

© Wade Trim Group, Inc.

PROJECT MANAGER:
FIELD BOOK INFORMATION: –
c:\pw_work\constmgr\d0350142\CPF-PLTS-Proposed\PavementTypicals.dgn
PLOTTED 5/21/2013 9:57:39 AM BY Constmg

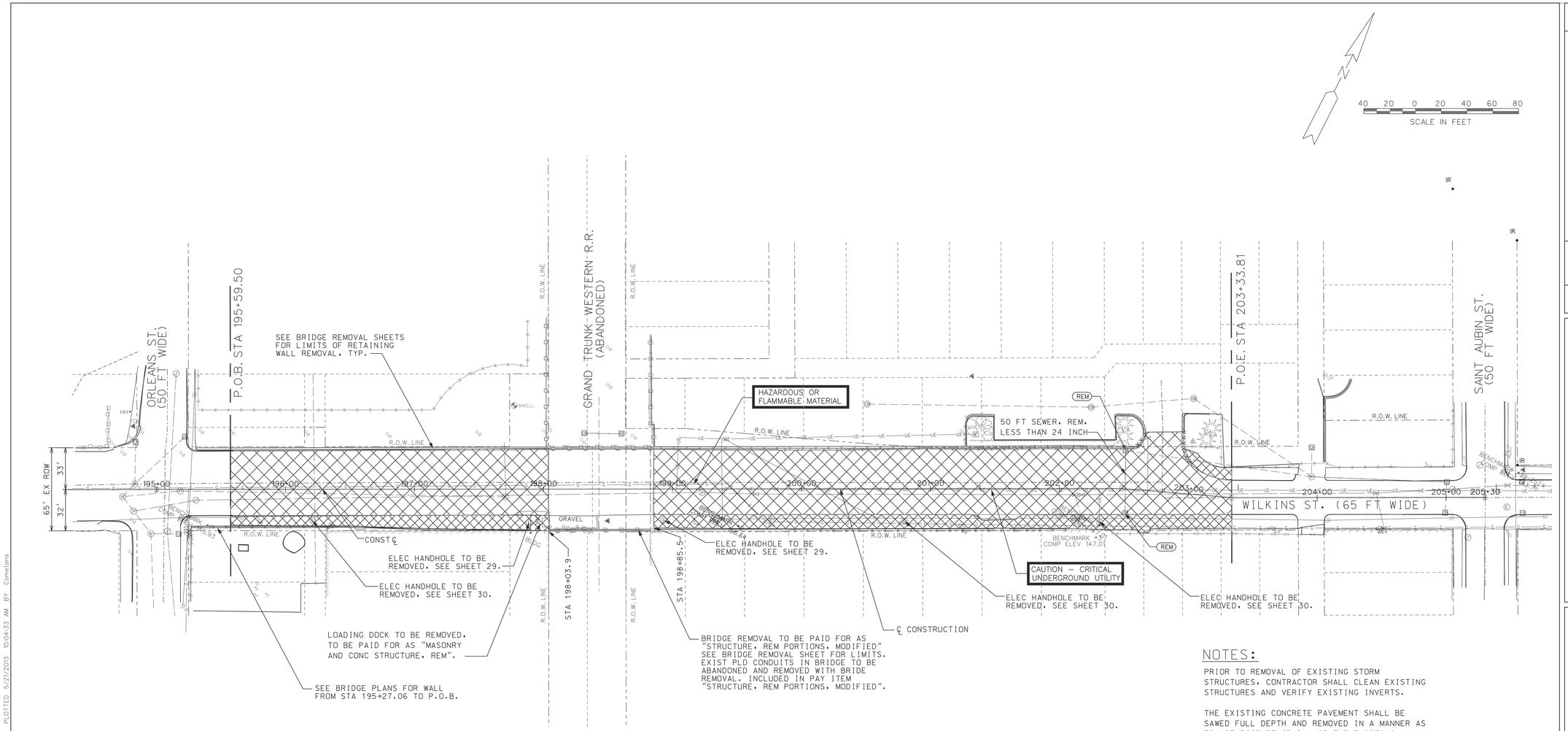

NOTES:

PRIOR TO REMOVAL OF EXISTING STORM STRUCTURES, CONTRACTOR SHALL CLEAN EXISTING STRUCTURES AND VERIFY EXISTING INVERTS.

THE EXISTING CONCRETE PAVEMENT SHALL BE SAWED FULL DEPTH AND REMOVED IN A MANNER AS TO NOT DISRUPT OR DAMAGE THE EXISTING BUILDINGS. NO IMPACT TYPE EQUIPTMENT SHALL BE USED.

WORK THIS SHEET WITH SHEET 29

REMOVAL QUANTITIES THIS SHEET

48	FT	CURB AND GUTTER, REM
840	SYD	SIDEWALK, REM
3905	SYD	HMA SURFACE, REM
3905	SYD	PAVT, REM
2	EA	DR STRUCTURE, REM
50	FT	SEWER, REM, LESS THAN 24 INCH
5430	CYD	EXCAVATION, EARTH
40	CYD	MASONRY AND CONC STRUCTURE, REM

-x-x-x-x-x-x-x- CURB AND GUTTER, REM

SIDEWALK, REM

HMA SURFACE, REM AND PAVT, REM

Know what's below. Call before you dig.

PROJECT MANAGER: - FIELD BOOK INFORMATION: -
C:\pw_work\corretjono\d0350142\CRP_PLTS\pod0rmovp1.dgn
PLOTTED 5/21/2013 10:04:33 AM BY Corretjono

REV#	DATE	DESCRIPTION	BY

NOT VALID FOR CONSTRUCTION UNLESS "SIGNED AND DATED"

WADETRIM
500 Griswold, Suite 2500
Detroit, MI 48226
313.961.3650
FAX 313.961.0898
www.wadetrim.com

Building relationships on a foundation of excellence

CITY OF DETROIT
DEPARTMENT OF PUBLIC WORKS
CITY ENGINEERING DIVISION
WILKINS ST OVER DEQUINDRE CUT S.N. 12493
ROAD REMOVAL PLAN

ISSUED FOR: DATE: BY:

JOB NO. DTE 2025-08T

SHEET 5 (378)

WILKINS STREET BRIDGE

© Wade Trim Group, Inc.

BENCHMARKS

BM#1: SET PK NAIL SOUTH SIDE UTILITY POLE @ SOUTHEAST CORNER OF WILKINS & ORLEANS
EL. 145.93

BM#2: SET PK NAIL SOUTH SIDE UTILITY POLE ON SOUTH SIDE WILKINS, 1ST POLE EAST OF BRIDGE
EL. 156.64

BM#3: ARROW ON HYDRANT SOUTH SIDE WILKINS, 1ST HYDRANT WEST OF ST. AUBIN
EL. 147.01

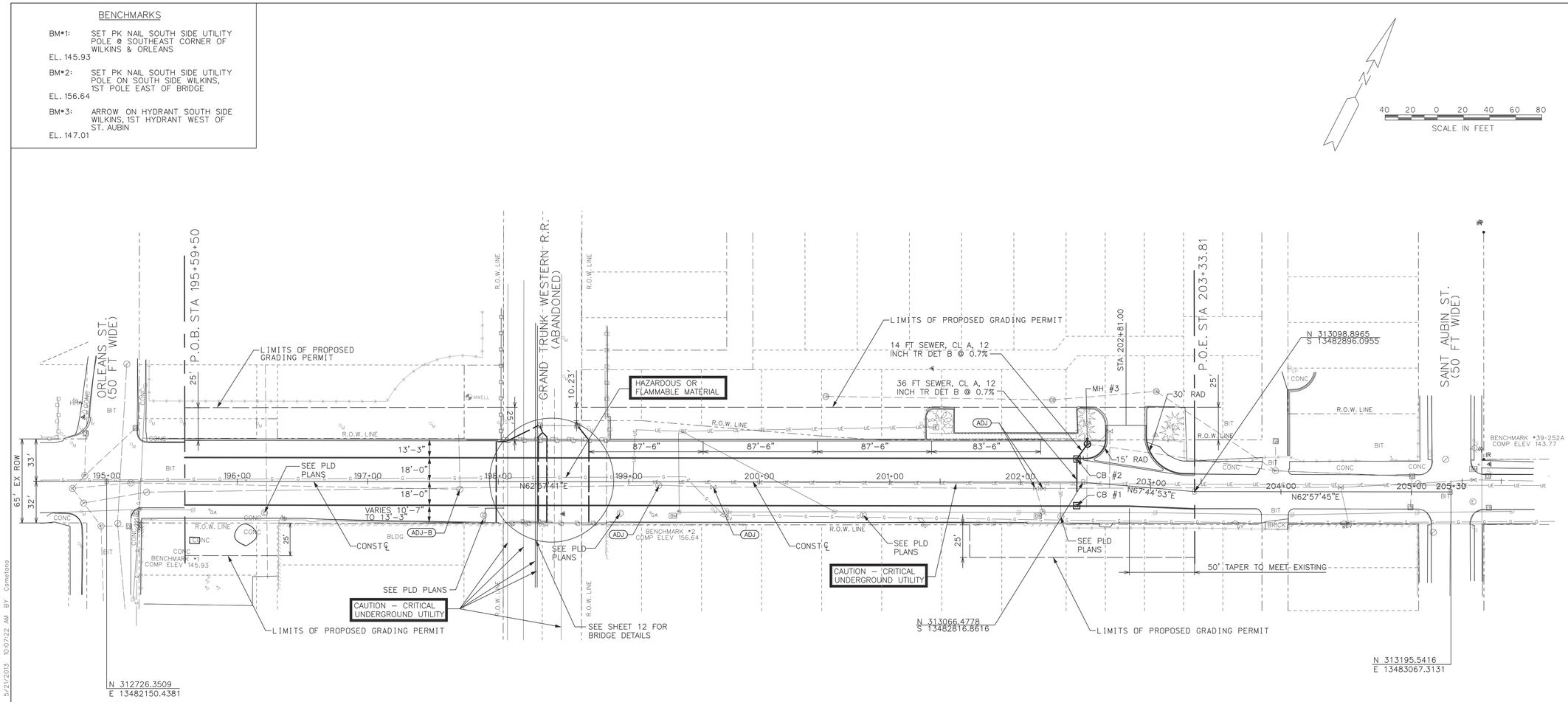

DRIVEWAY QUANTITES THIS SHEET			
STATION	PROPOSED DRIVE TOP WIDTH (FT)	DRIVEWAY, NONREINF CONC, 6 INCH (SYD)	PROPOSED DRIVE WIDTH AT CURB (FT)
202+81.00 LT	28.5	120	75.1

CB #1
N 313048.1962
E 13482820.5665

CB #2
N 313080.1313
E 13482804.5210

MH #3
N 313093.9864
E 13482806.3884

CONSTRUCTION QUANTITIES THIS SHEET

1958	CYD	EMBANKMENT, CIP
236	CYD	SUBBASE, CIP
3165	SYD	AGGREGATE BASE, 4 INCH
3045	SYD	CONC PAVT WITH INTEGRAL CURB, NONREINF, 9 INCH
19110	SFT	SIDEWALK, CONC, 4 INCH
87	FT	DRIVEWAY OPENING, CONC, DET M
1	EA	DR STRUCTURE, 24 INCH
2	EA	DR STRUCTURE, 48 INCH
2	EA	DR STRUCTURE COVER, TYPE K
2	EA	DR STRUCTURE COVER, TYPE B
50	FT	SEWER, CL A, 12 INCH, TR DET B
1	EA	DR STRUCTURE COVER, ADJ, CASE 1
1	EA	GATE BOX, ADJ, CASE 1
3	EA	WATER SHUTOFF, ADJ, CASE 1
2020	FT	JOINT CONTRACTION, CP
8	STA	MACHINE GRADING

Know what's below. Call before you dig.

PROJECT MANAGER: FIELD BOOK INFORMATION: -
C:\pw_work\cpowtons\d0350142\CCP-PLS-Roadconstructionplan.dgn
PLOTTED 5/21/2013 10:07:22 AM BY Cpowtons

REV#	DATE	DESCRIPTION	BY

NOT VALID FOR CONSTRUCTION UNLESS SIGNED AND DATED

WADETRIM
500 Griswold, Suite 2500
Detroit, MI 48226
313.961.1860
FAX 313.961.0898
www.wadetrim.com

Building relationships on a foundation of excellence

CITY OF DETROIT
DEPARTMENT OF PUBLIC WORKS
CITY ENGINEERING DIVISION
WILKINS ST OVER DEQUINDRE CUT S.N. 12493
ROAD CONSTRUCTION SHEET

ISSUED FOR: DATE: BY:

JOB NO. DTE 2025-08T

SHEET 6 (379)

WILKINS STREET BRIDGE

© Wade Trim Group, Inc.

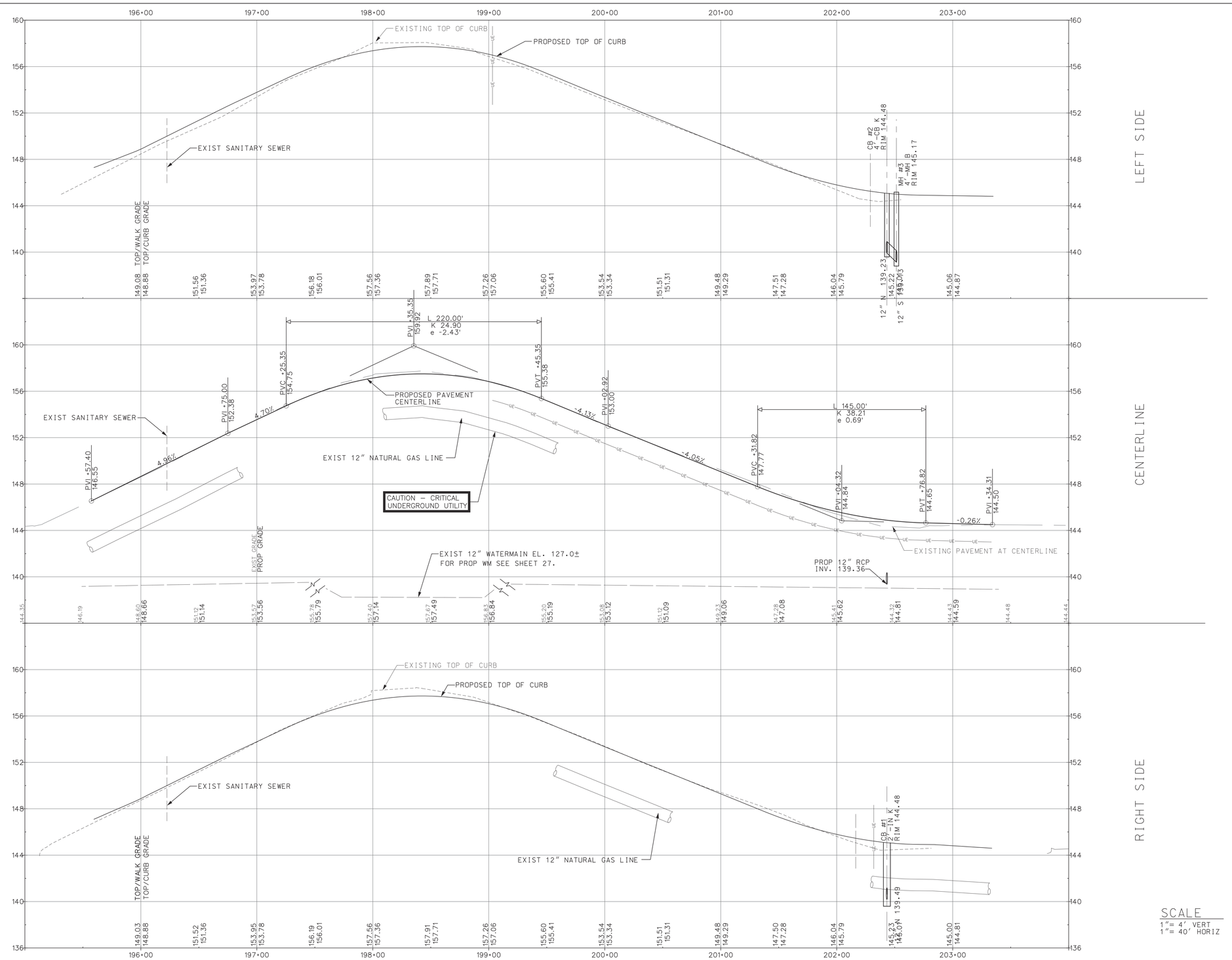

SCALE
1"= 4' VERT
1"= 40' HORIZ

REV#	DATE	DESCRIPTION	BY

NOT VALID FOR CONSTRUCTION UNLESS "SIGNED AND DATED"

WADETRIM
500 Griswold, Suite 2500
Detroit, MI 48226
313.961.3650
FAX 313.961.0898
www.wadetrim.com

Building relationships on a foundation of excellence

CITY OF DETROIT
DEPARTMENT OF PUBLIC WORKS
CITY ENGINEERING DIVISION
WILKINS ST OVER DEQUINDRE CUT S.N. 12493

ROAD PROFILE SHEET

ISSUED FOR: DATE: BY:

JOB NO. DTE 2025-08T

SHEET 7 (380)

WILKINS STREET BRIDGE

© Wade Trim Group, Inc.

PROJECT MANAGER: -
FIELD BOOK INFORMATION: -
C:\pw_work\cameronv\d0350142\CFS-FLTS-ConstructionProfileSheet.dgn
PLOTTED 5/21/2013 10:10:11 AM BY Cameronv

BENCHMARKS

BM#1: SET PK NAIL SOUTH SIDE UTILITY POLE @ SOUTHEAST CORNER OF WILKINS & ORLEANS
EL. 145.93

BM#2: SET PK NAIL SOUTH SIDE UTILITY POLE ON SOUTH SIDE WILKINS, 1ST POLE EAST OF BRIDGE
EL. 156.64

BM#3: ARROW ON HYDRANT SOUTH SIDE WILKINS, 1ST HYDRANT WEST OF ST. AUBIN
EL. 147.01

EXISTING STRUCTURE

EXISTING BRIDGE IS A 3-SPAN, CONCRETE ENCASED STEEL BEAM WITH CONCRETE DECK, CINDER FILL AND CONCRETE SURFACE AND HMA OVERLAY. THERE ARE CONCRETE PIERS AND ABUTMENTS ON SPREAD FOOTINGS. THE ORIGINAL BRIDGE WAS CONSTRUCTED APPROXIMATELY 1930.

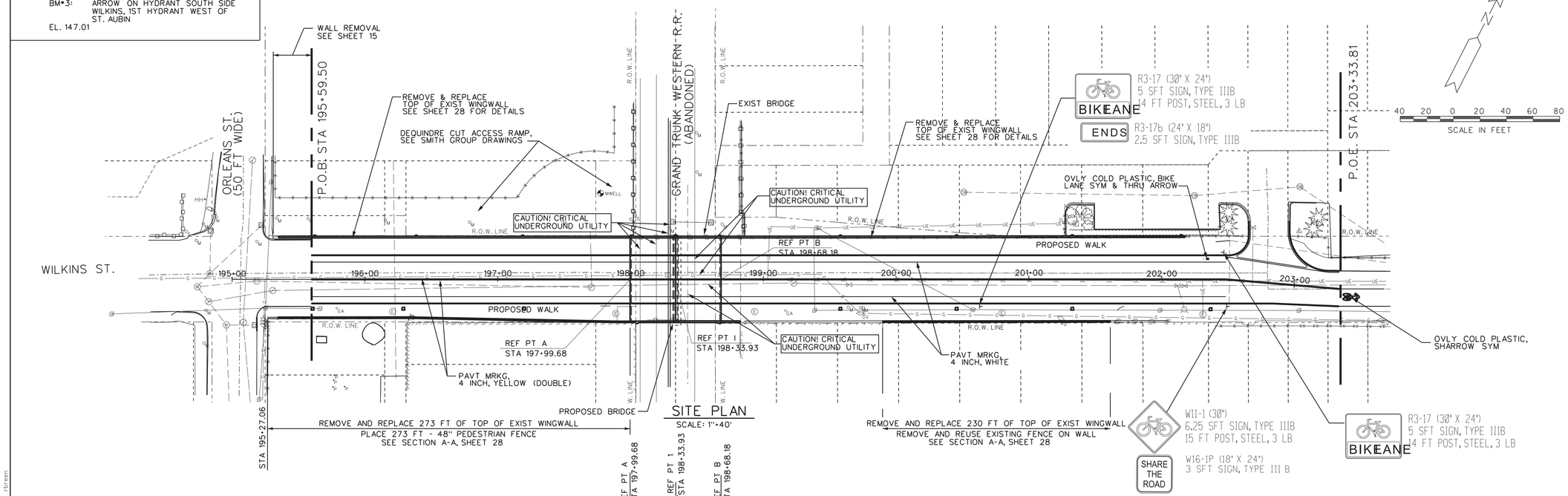

SITE PLAN

SCALE: 1"=40'

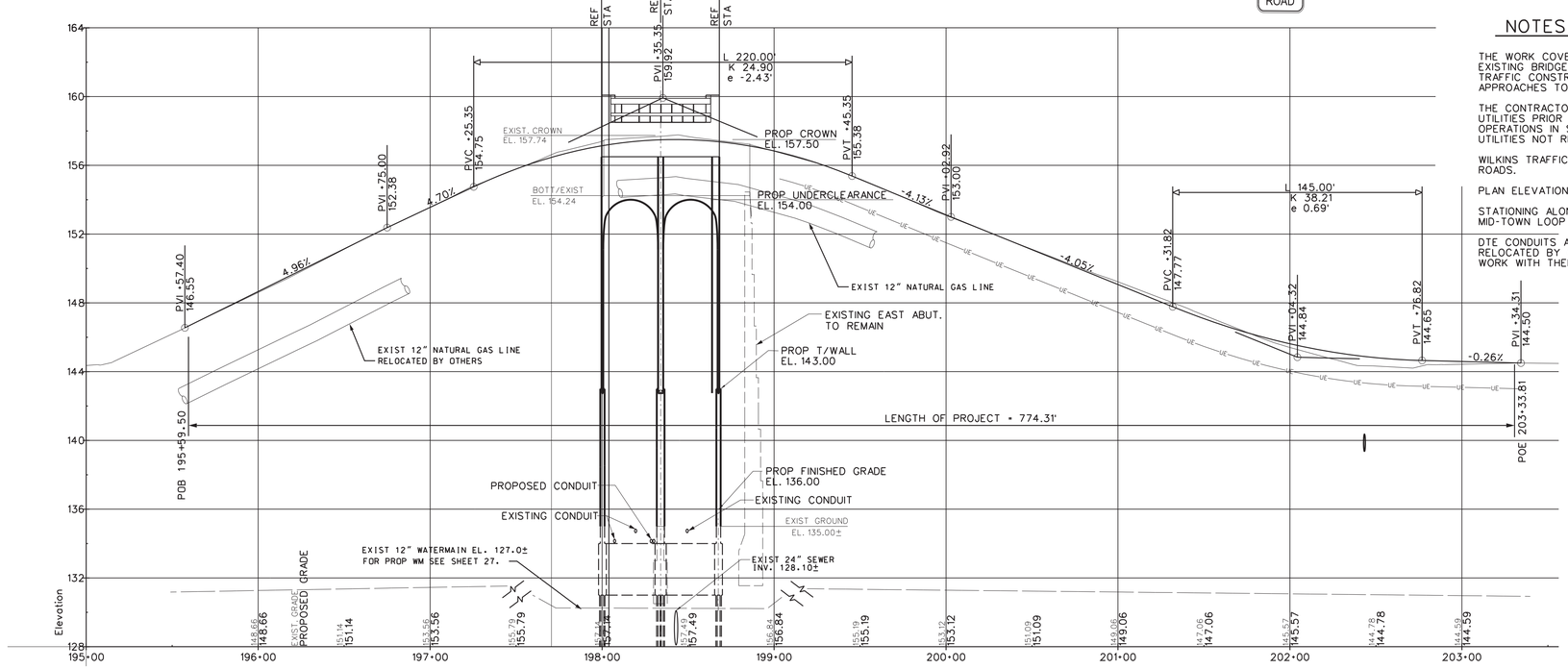

PROFILE

SCALE: VERT 1"=4'
HORZ 1"=40'

NOTES

THE WORK COVERED BY THESE PLANS INCLUDES REMOVAL OF EXISTING BRIDGE, AND PORTIONS OF WINGWALLS, MAINTAINING TRAFFIC CONSTRUCTION OF THE PROPOSED BRIDGE AND APPROACHES TO THE LIMITS SHOWN.

THE CONTRACTOR SHALL LOCATE ALL ACTIVE UNDERGROUND UTILITIES PRIOR TO STARTING WORK AND SHALL CONDUCT HIS OPERATIONS IN SUCH A MANNER AS TO ENSURE THAT THOSE UTILITIES NOT REQUIRING RELOCATION WILL NOT BE DISTURBED.

WILKINS TRAFFIC IS TO BE DETOURED OVER OTHER EXISTING ROADS.

PLAN ELEVATIONS REFER TO CITY OF DETROIT DATUM.

STATIONING ALONG WILKINS IS EXTENSION OF STATIONING FOR MID-TOWN LOOP PROJECT BY OTHERS.

DTE CONDUITS AND GAS MAIN IN BRIDGE DECK ARE TO BE RELOCATED BY OTEHRS. CONTRACTOR SHALL COORDINATE HIS WORK WITH THEIR ACTIVITIES.

REV#	DATE	DESCRIPTION	BY

NOT VALID FOR CONSTRUCTION UNLESS SIGNED AND DATED

WADETRIM
Building relationships on a foundation of excellence
900 Griswold, Suite 2500
Detroit, MI 48226
313.961.3650
FAX 313.961.0998
www.wadetrim.com

CITY OF DETROIT
DEPARTMENT OF PUBLIC WORKS
CITY ENGINEERING DIVISION
WILKINS ST. OVER DEQUINDRE CUT S.N. 12493
PLAN OF SITE

ISSUED FOR: DATE: BY:

WILKINS STREET BRIDGE

JOB NO. DTE 2025-08T

SHEET 8 (381)

© Wade Trim Group, Inc.

PROJECT MANAGER: - FIELD BOOK INFORMATION: -
c:\pw_work\rbreen\d0350142\CSP-PLTS-Plan of Site.dgn
PLOTTED 5/23/2013 3:15:34 PM BY rbreen

TEST BORING NO. B-01
GROUND SURFACE EL. 157.5 FT DCD
(ESTIMATED FROM EXISTING DRAWINGS)

Elev.	Blows	N	Description
157.5			3 INCHES OF ASPHALTIC CEMENT CONCRETE
157.3			9 INCHES OF GRAVELLY SAND FILL
156.5			8 INCHES OF PORTLAND CEMENT CONCRETE
155.8			
155.0	9 3 2	18.6 4000*	FILL - VERY STIFF SILTY CLAY, TRACE TO SOME SAND, TRACE GRAVEL, ASPHALT, BRICK AND GLASS, DARK BROWN (CL)
152.5	2 3 3	15.0 4000*	
150.5	1 1 2	4000*	
150.0			
147.5	1 1 1		FILL - VERY LOOSE MIXED FINE TO COARSE SAND AND CINDERS, TRACE SILT AND GRAVEL, MOIST
142.5	0 0 0		
141.5			

NOTES:
GROUNDWATER WAS NOT REPORTED DURING OR UPON COMPLETION OF DRILLING

BORING TERMINATED AT A DEPTH OF 16.0 FEET BELOW EXISTING GRADE (EL. 141.5 FEET DCD) ON OBSTRUCTION.

DATE STARTED: 10-03-12
DATE COMPLETED: 10-03-12
LOGGED BY: S.SWAMINATHAN (SOMAT)
CHECKED BY: A.OGRADY (SOMAT)
DRILL RIG : CME 75
METHOD: SPT AUTO
BACKFILL: CUTTINGS/PLUG

TEST BORING NO. B-01A
GROUND SURFACE EL. 157.5 FT DCD
(ESTIMATED FROM EXISTING DRAWINGS)

Elev.	Blows	N	Description
157.5			Profile drilled
144.0			
142.5	2 2 2	18.8 2500*	Stiff to hard SILTY CLAY, trace to some sand, trace gravel, brown (CL)
137.5	10 14 16	12.5 9000+*	Hard to stiff SILTY CLAY, trace sand and gravel, gray (CL)
132.5	6 10 10	12.4 9000+*	BOTT/FOOTING ABUTMENT (B/EAST) EL 132.0
127.5	5 9 8	12.3 9000+*	
122.5	5 6 7	13.9 6000*	
117.5	2 4 6	13.9 3000*	
112.5	2 4 4	17.3 2500*	MINIMUM PILE PENETRATION HP 12X53 EL 112.0
107.5	2 4 5	16.9 1800#	Medium SILTY CLAY, trace sand and gravel, gray (CL)
102.5	0 0 5	18.0 1600#	
99.0			
97.5	11 20 20		Dense SILTY FINE SAND, trace clay, gray, wet (SM)
94.0			
92.5	0 0 4	16.1 1600#	
87.5	0 0 1	17.3 1600#	Medium SILTY CLAY, trace sand and gravel, occasional layers of soft clay, gray (CL)
82.5	0 0 2	16.5 1400#	
77.5	0 0 3	19.6 1200#	

TEST BORING NO. B-01A (CONTINUED)

Elev.	Blows	N	Description
72.5	0 0 4	17.9 1600#	
67.5	0 0 4	22.5 1400#	
62.5	2 3 2	24.7 1000#	
57.5	0 0 3	25.1 1000#	
52.5	0 0 4	17.9 1600#	Medium SILTY CLAY, trace sand and gravel, occasional layers of soft clay, gray (CL)
47.5	0 0 3	32.3 800#	
42.5	0 0 4	19.5 1800#	
37.5	0 0 3	21.2 1400#	
32.5	0 0 5	1600#	
27.5	0 0 3	18.5 1600#	
22.5	0 0 5	21.1 1800#	
17.5	0 0 3	24.9 1200#	
12.5	0 0 2	26.0 1400#	
7.5	0 0 3	25.2 1200#	
4.0			
2.5	28 31 60	10.0 9000*	ESTIMATED PILE TIP ELEVATION HP 12X53 NOMINAL RESISTANCE 350 KIPS EL 2.0
-2.5	39 35 43	9.7 9000+*	Alternating layers of hard SILTY CLAY and extremely dense CLAYEY SILT, some sand, trace gravel, gray (CL)
-7.5	75 78 88		

NOTES:
GROUNDWATER REPORTED DURING DRILLING AT 58.5 FEET BELOW EXISTING GRADE (EL. 99.0 FEET DCD)

GROUNDWATER WAS NOT REPORTED UPON COMPLETION OF DRILLING

BORING TERMINATED AT A DEPTH OF 165.0 FEET BELOW EXISTING GRADE (EL. MINUS 7.5 FEET DCD).

LEGEND:
APPROXIMATE SOIL BORING LOCATION

LOCATION PLAN

13 16 14 — 1ST 6 inch, 2ND 6 inch, 3RD 6 inch: NUMBERS IN CIRCLES DENOTE NUMBER OF BLOWS REQUIRED TO DRIVE A 2 inch O.D. (1±2 inch I.D.) SPLIT SPOON SAMPLER 3 SUCCESSIVE 6 inch INCREMENTS USING A 140 LB HAMMER FALLING 2.5 ft.

37/0" — WHERE THE SAMPLER IS DRIVEN DISTANCES OTHER THAN 18 inches, THE DISTANCE IS SHOWN IN THE CIRCLE WITH THE NUMBER OF BLOWS IN THE FORM OF A FRACTION. (DISTANCE IS IN INCHES).

NR — NO RECOVERY

CONSISTENCY WAS DETERMINED BY INSPECTION OF SAMPLES AND SUBSTANTIATED BY SOIL RESISTANCE TO DRILLING TOOLS (CASING OR AUGER). UNIFIED SOIL CALSSIFICAITON SYSTEM (USCS) GROUP SYMBOL DETERMINED PER ASTM VISUAL-MANUAL PROCEDURES.

THE SOIL BORING LOGS REPRESENT POINT INFORMATION. PRESENTATION OF THIS INFORMATION IN NO WAY IMPLIES THAT THE SUBSURFACE CONDITIONS ARE THE SAME AT LOCATIONS OTHER THAN THE EXACT LOCATION OF THE BORING.

GROUNDWATER LEVELS REPRESENT THE CONDITIONS AT THE TIME THE MEASUREMENTS WERE OBTAINED AND SHOULD BE EXPECTED TO FLUCTUATE THROUGHOUT THE YEAR. GROUNDWATER LEVELS MAY ALSO BE INFLUENCED BY RESIDUAL BORING WATER.

REV #	DATE	DESCRIPTION	BY

NOT VALID FOR CONSTRUCTION UNLESS SIGNED AND DATED

WADETRIM
500 Griswold, Suite 2500
Detroit, MI 48226
313.961.3650
FAX 313.961.0898
www.wadetrim.com

Building relationships on a foundation of excellence

CITY OF DETROIT
DEPARTMENT OF PUBLIC WORKS
CITY ENGINEERING DIVISION
WILKINS ST. OVER DEQUINDRE CUT S.N. 12493
LOG OF BORINGS

ISSUED FOR: DATE: BY:

JOB NO. DTE 2025-08T

SHEET 9 (382)

WILKINS STREET BRIDGE

© Wade Trim Group, Inc.

PLOTTED 5/21/2013 10:15:56 AM BY Cometong

PROJECT MANAGER: -
FIELD BOOK INFORMATION: -
C:\pw_work\cometong\d0350142\S5B-PL15-Soilboring-log.dgn

TEST BORING NO. B-02
GROUND SURFACE EL. 135.5 FT DCD
(ESTIMATED FROM EXISTING DRAWINGS)

Elev.	Blows	N	Description
135.5			
133.0	5 6 7	12.5 9000*	
			BOTT/FOOTING PIER 1 EL 132.0
130.5	6 8 8	12.6 9000+*	Hard to stiff SILTY CLAY, trace sand and gravel, brownish-gray to gray (CL)
128.0	4 6 8	12.9 7940	
125.5	4 7 8	14.7 6000*	
120.5	2 4 3	16.8 2500*	
115.5	2 3 4	17.2 2000*	
			MINIMUM PILE PENETRATION HP 12X53 EL 112.0
110.5	1 4 5	17.3 2000*	
106.5 / 105.5	2 3 1		Very loose SILTY FINE SAND, gray, wet (SM)
102.0 / 100.5	1 4 5	18.1 1800#	
95.5	2 3 4	16.8 <>	Medium to stiff SILTY CLAY, trace sand and gravel, gray (CL)
90.5	2 2 4	16.9 1600#	
85.5	0 0 2	16.3 1000#	
80.5	0 2 4	16.8 1200#	
75.5	0 0 4	18.5 1400#	
70.5	0 0 5	20.6 1200#	
65.5	0 0 2	27.4 1000#	
60.5	0 0 2	38.4 1400#	
55.5	0 0 2	24.3 1400#	

TEST BORING NO. B-02 (CONTINUED)

Elev.	Blows	N	Description
50.5	0 0 1	18.3 1000#	Medium to stiff SILTY CLAY, trace sand and gravel, gray (CL)
45.5	0 0 1	20.5 1600#	
40.5	2 5 5	20.4 1400#	
35.5	0 4 7	20.6 1400#	
30.5	0 0 6	20.2 1800#	
25.5	0 0 8	20.3 2000#	
20.5	0 0 7	17.6 1600#	
15.5	0 0 4	24.0 1400#	
10.5	0 0 5	23.7 1400#	
6.5 / 5.5	4 17 30	8.0 9000+*	
0.5	46 58 55	7.9 <>	Hard SILTY CLAY, some sand, trace gravel, gray (CL)
			ESTIMATED PILE TIP ELEVATION HP 12X53 NOMINAL RESISTANCE 350 EL MINUS 3.0
-4.5	30 37 53	11.1 9000+*	
-9.5	50 60 78	7.1 9000+*	

NOTES:
GROUNDWATER REPORTED DURING DRILLING AT 28.5 FEET BELOW EXISTING GRADE (EL. 107.0 FEET DCD)

GROUNDWATER WAS NOT REPORTED UPON COMPLETION OF DRILLING

BORING TERMINATED AT A DEPTH OF 145.0 FEET BELOW EXISTING GRADE (EL. MINUS 9.5 FEET DCD).

LEGEND:

APPROXIMATE SOIL BORING LOCATION

LOCATION PLAN

13 / 16 / 14 — 1ST 6 inch, 2ND 6 inch, 3RD 6 inch: NUMBERS IN CIRCLES DENOTE NUMBER OF BLOWS REQUIRED TO DRIVE A 2 inch O.D. (1 3/8 inch I.D.) SPLIT SPOON SAMPLER 3 SUCCESSIVE 6 inch INCREMENTS USING A 140 LB HAMMER FALLING 2.5 ft.

37/0" — WHERE THE SAMPLER IS DRIVEN DISTANCES OTHER THAN 18 inches, THE DISTANCE IS SHOWN IN THE CIRCLE WITH THE NUMBER OF BLOWS IN THE FORM OF A FRACTION. (DISTANCE IS IN INCHES).

NR — NO RECOVERY

CONSISTENCY WAS DETERMINED BY INSPECTION OF SAMPLES AND SUBSTANTIATED BY SOIL RESISTANCE TO DRILLING TOOLS (CASING OR AUGER). UNIFIED SOIL CALSSIFICAITON SYSTEM (USCS) GROUP SYMBOL DETERMINED PER ASTM VISUAL-MANUAL PROCEDURES.

THE SOIL BORING LOGS REPRESENT POINT INFORMATION. PRESENTATION OF THIS INFORMATION IN NO WAY IMPLIES THAT THE SUBSURFACE CONDITIONS ARE THE SAME AT LOCATIONS OTHER THAN THE EXACT LOCATION OF THE BORING.

GROUNDWATER LEVELS REPRESENT THE CONDITIONS AT THE TIME THE MEASUREMENTS WERE OBTAINED AND SHOULD BE EXPECTED TO FLUCTUATE THROUGHOUT THE YEAR. GROUNDWATER LEVELS MAY ALSO BE INFLUENCED BY RESIDUAL BORING WATER.

Somat Engineering, INCORPORATED

REV #	DATE	DESCRIPTION	BY

NOT VALID FOR CONSTRUCTION UNLESS SIGNED AND DATED

WADETRIM
500 Griswold, Suite 2500
Detroit, MI 48226
313.961.3650
FAX: 313.961.0898
www.wadetrim.com

Building relationships on a foundation of excellence

CITY OF DETROIT
DEPARTMENT OF PUBLIC WORKS
CITY ENGINEERING DIVISION
WILKINS ST. OVER DEQUINDRE CUT S.N. 12493
LOG OF BORINGS

ISSUED FOR: DATE: BY:

JOB NO. DTE 2025-08T

SHEET 10 (383)

WILKINS STREET BRIDGE

© Wade Trim Group, Inc.

PROJECT MANAGER: FIELD BOOK INFORMATION: -
C:\Pw_work\cometana\d0350142\CSB-PLTS-SoBoring.cvp2.dgn

PLOTTED 5/21/2013 10:17:02 AM BY Cometana

TEST BORING NO. B-03
GROUND SURFACE EL. 157.5 FT DCD
(ESTIMATED FROM EXISTING DRAWINGS)

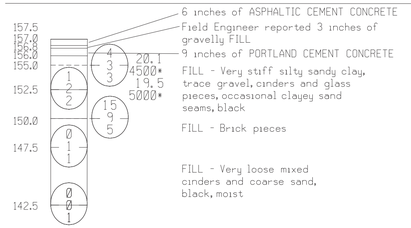

NOTES:
GROUNDWATER WAS NOT REPORTED DURING OR UPON COMPLETION OF DRILLING

BORING TERMINATED AT A DEPTH OF 15.0 FEET BELOW EXISTING GRADE (EL. 142.5 FEET DCD) ON OBSTRUCTION.

DATE STARTED: 10-08-12
DATE COMPLETED: 10-08-12
LOGGED BY: S.SWAMINATHAN (SOMAT)
CHECKED BY: A.OGRADY (SOMAT)
DRILL RIG : CME 75
METHOD: SPT AUTO
BACKFILL: CUTTINGS/PLUG

TEST BORING NO. B-03A
GROUND SURFACE EL. 157.5 FT DCD
(ESTIMATED FROM EXISTING DRAWINGS)

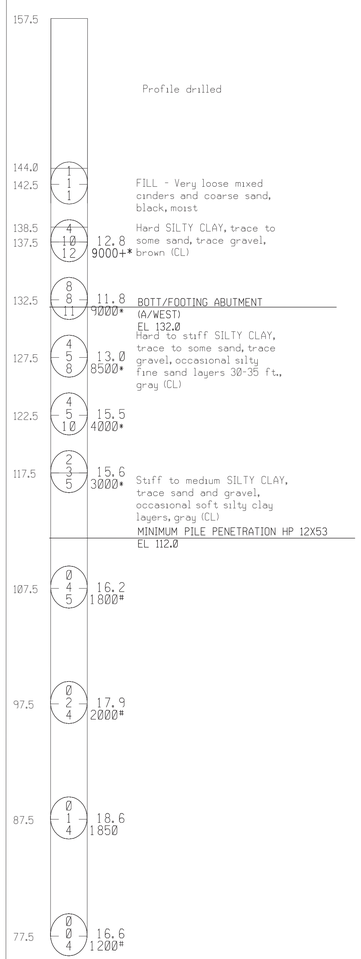

TEST BORING NO. B-03A (CONTINUED)

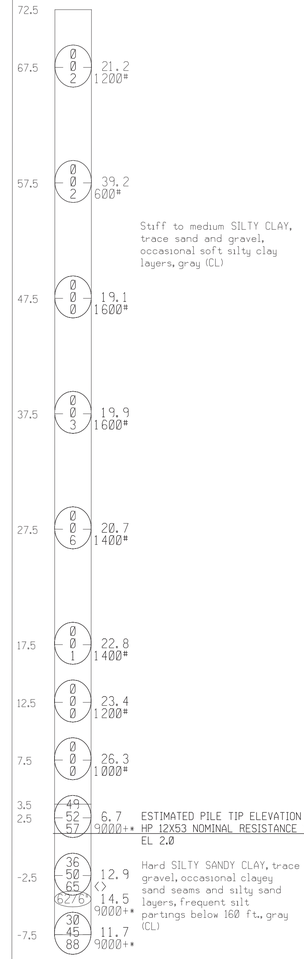

NOTES:
GROUNDWATER REPORTED DURING DRILLING AT 153.0 FEET BELOW EXISTING GRADE (EL. 4.5 FEET DCD)

GROUNDWATER WAS NOT REPORTED UPON COMPLETION OF DRILLING

BORING TERMINATED AT A DEPTH OF 165.0 FEET BELOW EXISTING GRADE (EL. MINUS 7.5 FEET DCD).

LEGEND:

APPROXIMATE SOIL BORING LOCATION

LOCATION PLAN

13 16 14 — 1ST 6 inch 2ND 6 inch 3RD 6 inch — NUMBERS IN CIRCLES DENOTE NUMBER OF BLOWS REQUIRED TO DRIVE A 2 inch O.D. (1*2 inch I.D.) SPLIT SPOON SAMPLER 3 SUCCESSIVE 6 inch INCREMENTS USING A 140 LB HAMMER FALLING 2.5 ft.

37/0* — WHERE THE SAMPLER IS DRIVEN DISTANCES OTHER THAN 18 inches, THE DISTANCE IS SHOWN IN THE CIRCLE WITH THE NUMBER OF BLOWS IN THE FORM OF A FRACTION. (DISTANCE IS IN INCHES).

NR — NO RECOVERY

CONSISTENCY WAS DETERMINED BY INSPECTION OF SAMPLES AND SUBSTANTIATED BY SOIL RESISTANCE TO DRILLING TOOLS (CASING OR AUGER). UNIFIED SOIL CALSSIFICAITON SYSTEM (USCS) GROUP SYMBOL DETERMINED PER ASTM VISUAL-MANUAL PROCEDURES.

THE SOIL BORING LOGS REPRESENT POINT INFORMATION. PRESENTATION OF THIS INFORMATION IN NO WAY IMPLIES THAT THE SUBSURFACE CONDITIONS ARE THE SAME AT LOCATIONS OTHER THAN THE EXACT LOCATION OF THE BORING.

GROUNDWATER LEVELS REPRESENT THE CONDITIONS AT THE TIME THE MEASUREMENTS WERE OBTAINED AND SHOULD BE EXPECTED TO FLUCTUATE THROUGHOUT THE YEAR. GROUNDWATER LEVELS MAY ALSO BE INFLUENCED BY RESIDUAL BORING WATER.

Somat Engineering, INCORPORATED

REV #	DATE	DESCRIPTION	BY

NOT VALID FOR CONSTRUCTION UNLESS SIGNED AND DATED

WADETRIM
500 Griswold, Suite 2500
Detroit, MI 48226
313.961.3650
FAX 313.961.0898
www.wadetrim.com

Building relationships on a foundation of excellence

CITY OF DETROIT
DEPARTMENT OF PUBLIC WORKS
CITY ENGINEERING DIVISION
WILKINS ST. OVER DEQUINDRE CUT S.N. 12493
LOG OF BORINGS

ISSUED FOR: DATE: BY:

JOB NO. DTE 2025-08T

SHEET 11 (384)

WILKINS STREET BRIDGE

© Wade Trim Group, Inc.

PROJECT MANAGER: -
C:\pw_work\somatenc\d0350142\CSB_FL\TS-Soilborings-09.3.dgn
FIELD BOOK INFORMATION: -
PLOTTED 5/21/2013 10:18:43 AM BY Cornelong

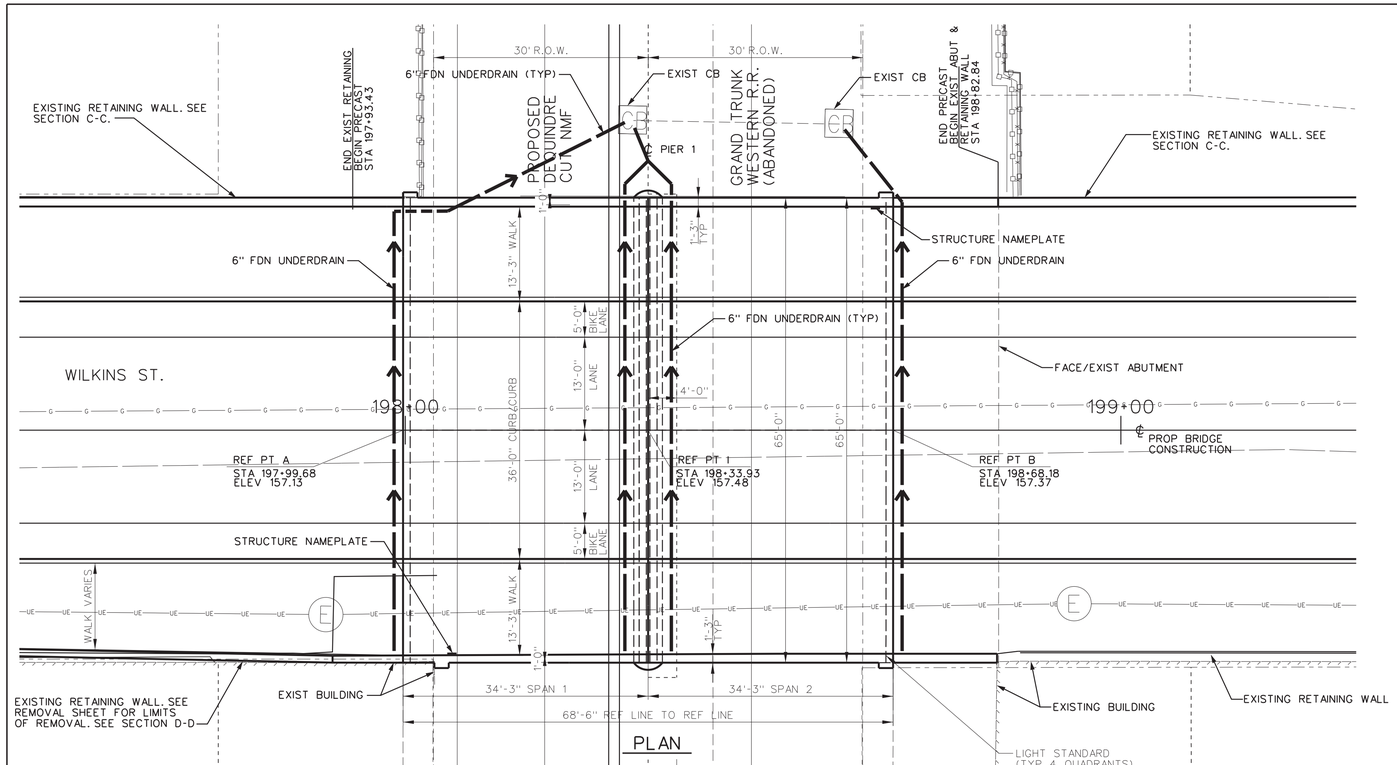

ELEVATION

NOTE:
PEDESTRIAN FENCE, SPECIAL NOT SHOWN FOR CLARITY

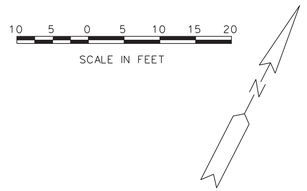

NOTES:

THE DESIGN OF THIS STRUCTURE IS BASED ON 1.2 TIMES THE CURRENT AASHTO LRFD BRIDGE DESIGN SPECIFICATION HL-93 LOADING WITH THE EXCEPTION THAT THE DESIGN TANDEM PORTION OF THE HL-93 LOAD DEFINITION SHALL BE REPLACED BY A SINGLE 60 KIP AXLE LOAD BEFORE APPLICATION OF THIS 1.2 FACTOR. THE RESULTING LOAD IS DESIGNATED HL-93 MOD. LIVE LOAD PLUS DYNAMIC LOAD ALLOWANCE DEFLECTION DOES NOT EXCEED 1/1000 OF SPAN LENGTH.

CONCRETE SURFACE COATING SHALL BE APPLIED TO EXPOSED FACES OF RAILING, ARCH FASCIAS AND PIER FASCIA. EXPOSED RETAINING WALLS AND BRIDGE RAILING SHALL ALSO BE COATED. SEE DETAIL SHEETS FOR LIMITS OF COVERAGE.

EXISTING BRIDGE NAMEPLATES ARE TO BE SALVAGED ON SITE AND SHALL BE GIVEN TO THE ENGINEER AND BECOME THE PROPERTY OF THE CITY OF DETROIT.

SEE REMOVAL SHEETS FOR LIMIT OF EXISTING STRUCTURE, REMOVALS.

REMOVAL OF BRIDGE SUPERSTRUCTURE, CONCRETE PIERS AND CONCRETE ABUTMENTS SHALL BE PAID FOR AS "STRUCTURE, REM PORTIONS, MODIFIED"

REMOVAL OF PORTIONS OF CONCRETE RETAINING WALL SHALL BE PAID FOR AS "STRUCTURE, REM PORTIONS, MODIFIED".

F.O. DENOTES EXISTING FIBER OPTIC LINE. EXACT DEPTHS ARE UNKNOWN, LATERAL LOCATION APPROXIMATE. WHEN WORKING WITHIN FIVE (5) FEET OF LINES, CONTRACTOR SHALL NOTIFY F.O. UTILITY TO REQUEST SUPERVISION. ONLY HAND DIGGING SHALL BE ALLOWED AROUND FIBER OPTIC LINES.

CONTRACTOR SHALL BE REQUIRED TO TEMPORARILY SUPPORT FIBER OPTIC LINES DURING CONSTRUCTION. INCLUDED IN THE COST OF THE CONTRACT.

SEE SHEET 18 FOR DETAILS OF PROTECTING FIBER OPTIC CABLES AT FOOTING LOCATIONS.

EXISTING PLANS DO NOT INDICATE TIMBER PILES. IF EXISTING TIMBER PILES ARE LOCATED WITHIN THE PROPOSED FOOTINGS, THE CONTRACTOR SHALL DO THE FOLLOWING WORK:

- IF THE EXISTING PILE IS IN CONFLICT WITH PROPOSED PILING, IT SHALL BE REMOVED.

- IF EXISTING PILE IS NOT IN CONFLICT WITH PROPOSED, THE EXISTING PILE SHALL BE CUT DOWN 6'-0" BELOW BOTTOM OF PROPOSED FOOTING.

REMOVAL OF EXIST PILES SHALL BE PAID FOR AS "PILES, TIMBER, REM". CUTTING DOWN OF PILES SHALL BE INCLUDED IN THE PAY ITEM "STRUCTURES, REM PORTIONS, MODIFIED".

SEE SPECIAL PROVISION ON FIBER OPTIC COORDINATION & PROTECTION. SEE SHEET 18 FOR SLEEVE DETAIL.

CONDUITS IN EXISTING BRIDGE MAY BE ASBESTOS. CONTRACTOR SHALL CONFIRM.

MISCELLANEOUS QUANTITIES

5000	DLR	ASBESTOS MATERIALS, REMOVAL AND DISPOSAL
1	LS	AUDIO-VISUAL FILMING (SN 12493)
1	LS	PROJECT CLEANUP (SN 12493)
1	LS	STRUCTURES, REM PORTIONS, MODIFIED (SN 12493)
2695	CYD	BACKFILL, STRUCTURE, CIP, MODIFIED
1866	CYD	EXCAVATION, FDN
3	EA	EROSION CONTROL, INLET PROTECTION, FABRIC DROP
1200	FT	EROSION CONTROL, SILT FENCE
25	SYD	SLOPE RESTORATION, TYPE A
260	FT	UNDERDRAIN, FDN, 6 INCH
65	FT	UNDERDRAIN, OUTLET, 6 INCH
3	EA	DR STRUCTURE TAP, 6 INCH
1550	FT	PAVT MRKG, SPRAYABLE THERMOPL, 4 INCH, YELLOW
1400	FT	PAVT MRKG, SPRAYABLE THERMOPL, 4 INCH, WHITE
22	SFT	SIGN, TYPE IIIB
43	FT	POST, STEEL, 3LB
3	EA	POST HOLE THROUGH CONC FOR STEEL POST
3	EA	PAVT MRKG, OVLY COLD PLASTIC, BIKE LANE SYM & THRU ARROW
1	EA	PAVT MRKG, OVLY COLD PLASTIC, SHARROW SYM
245	FT	FENCE, CHAIN LINK, 48 INCH
20	EA	PILE, TIMBER, REM
205	CYD	NON-HAZARDOUS CONTAMINATED MATERIAL HANDLING AND DISPOSAL, LM
1	LS	RELOCATION AND SITE CLEANUP (SN 12493)
1	LS	COORDINATION, FIBER OPTIC LINE (SN 12493)
16	EA	PROTECTION, FIBER OPTIC LINE, BRIDGE

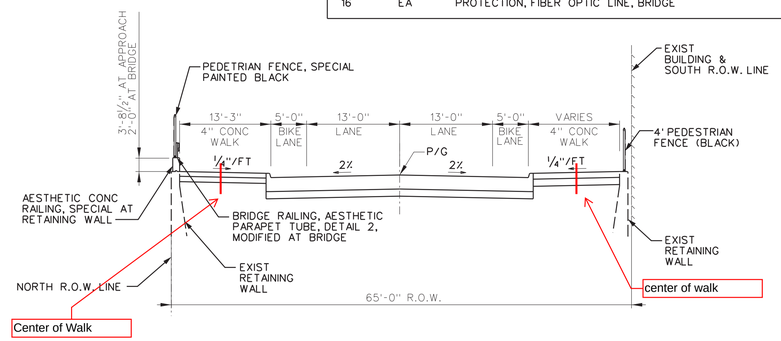

APPROACH SECTION

REV#	DATE	DESCRIPTION	BY

NOT VALID FOR CONSTRUCTION UNLESS SIGNED AND DATED.

WADE TRIM
Building relationships on a foundation of excellence
500 Griswold, Suite 2500
Detroit, MI 48226
313.961.3650
FAX 313.961.8998
www.wadetrim.com

CITY OF DETROIT
DEPARTMENT OF PUBLIC WORKS
CITY ENGINEERING DIVISION
WILKINS ST. OVER DEQUINDRE CUT S.N. 12493
GENERAL PLAN OF STRUCTURE

ISSUED FOR: DATE: BY:

WILKINS STREET BRIDGE

JOB NO. DTE 2025-08T

SHEET 12 (385)

© Wade Trim Group, Inc.

PLOTTED 5/22/2013 7:58:58 AM BY rbrown

PROJECT MANAGER: - FIELD BOOK INFORMATION: -
c:\pw_work\rbrown\d0350142\CSP-PLTS-Plan01Structure.dgn

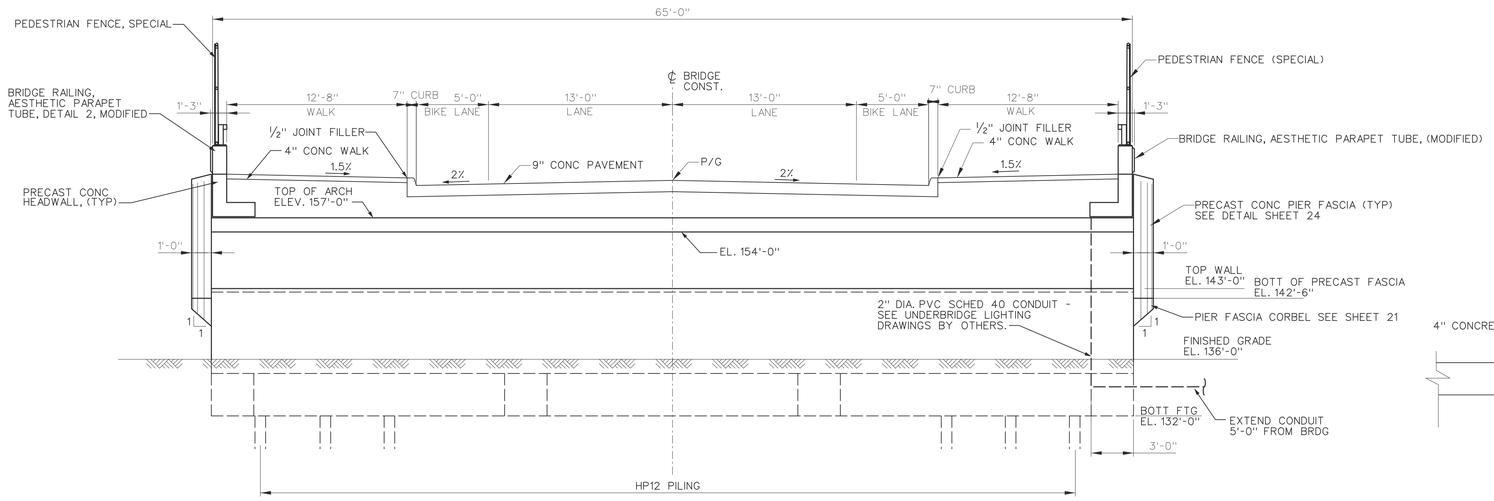

BRIDGE SECTION

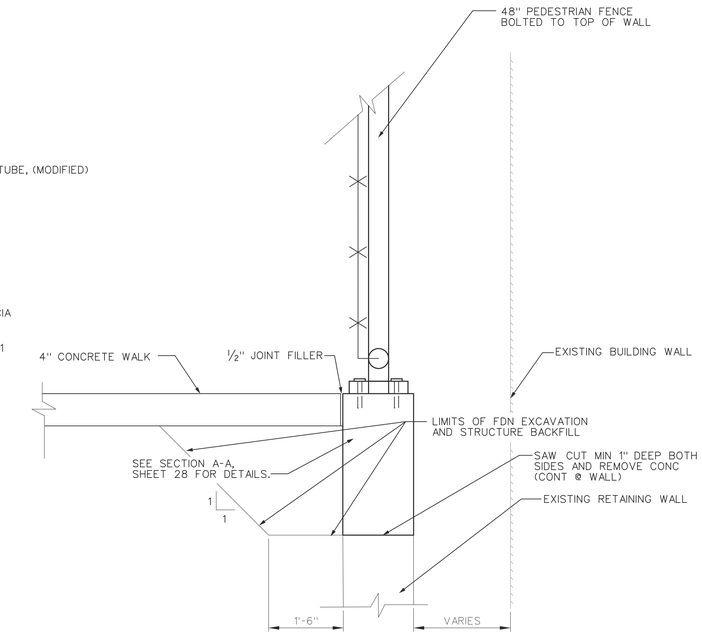

SECTION THRU SOUTH WEST RETAINING WALL

NO SCALE

STA 195+27.06 TO STA 197+93.43

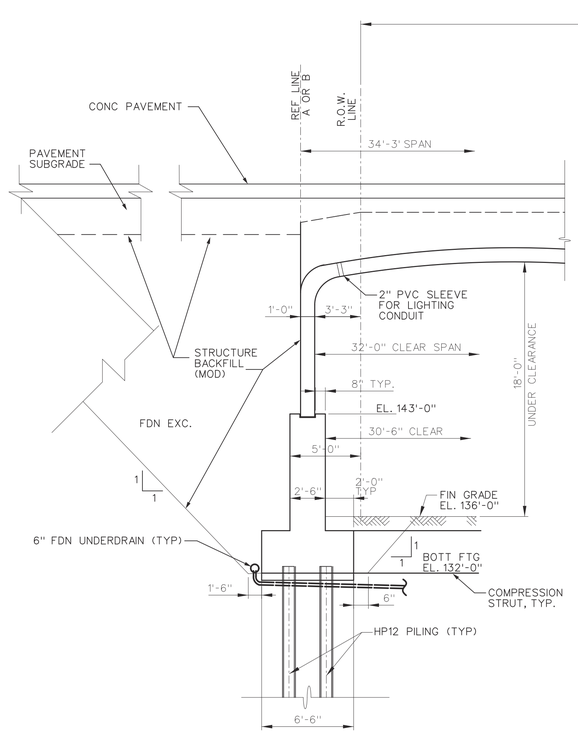

SECTION THRU ABUTMENT

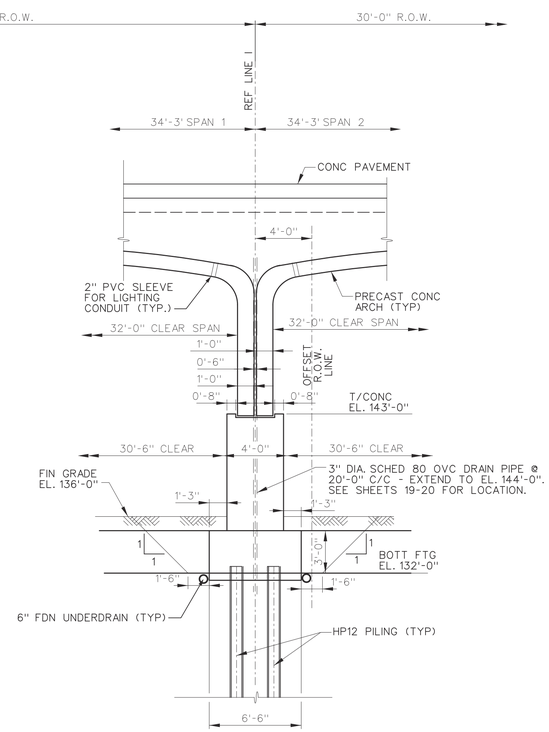

SECTION THRU PIER

NOTE:
FOR LOCATION OF PVC SLEEVES SEE PRECAST DETAILS, SHEET 24

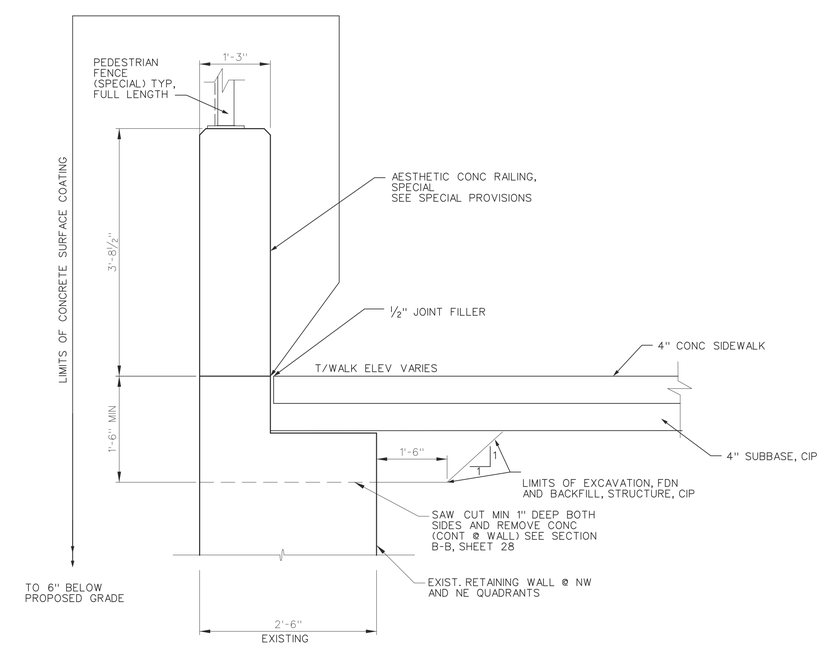

SECTION THRU NORTH RETAINING WALLS

NO SCALE

SEE SHEET 28 FOR DETAILS

REV #	DATE	DESCRIPTION	BY

NOT VALID FOR CONSTRUCTION UNLESS SIGNED AND DATED

WADETRIM
500 Griswold, Suite 2500
Detroit, MI 48226
313.961.9500
FAX: 313.961.0898
www.wadetrim.com

Building relationships on a foundation of excellence.

CITY OF DETROIT
DEPARTMENT OF PUBLIC WORKS
CITY ENGINEERING DIVISION
WILKINS ST. OVER DEQUINDRE CUT S.N. 12493
GENERAL PLAN OF STRUCTURE DETAILS

ISSUED FOR: DATE: BY:

JOB NO. DTE 2025-08T

SHEET 13 (386)

WILKINS STREET BRIDGE

© Wade Trim Group, Inc.

PLOTTED 5/21/2013 10:23:08 AM BY Cometono

PROJECT MANAGER: - FIELD BOOK INFORMATION: -
C:\pw_work\cometono\d0350142\DT-FLTS-Structure01b06.dgn

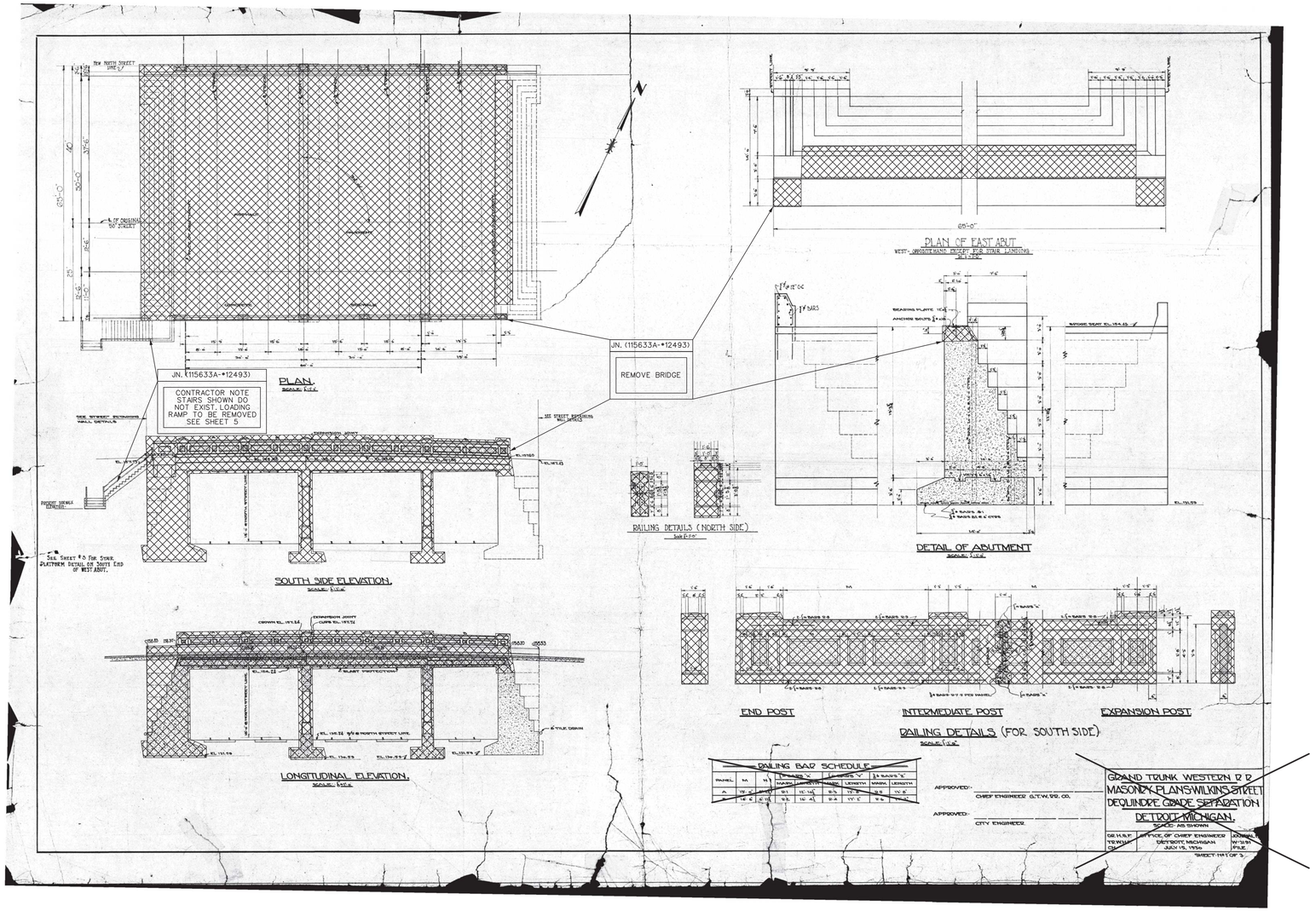

JOB NO. (115633A-#12493)

IT IS UNCERTAIN IF TIMBER PILING EXISTS AT EXISTING BRIDGE. CONTRACTOR SHALL MAKE HIS OWN DETERMINATION IF PILES ARE PRESENT. IF PILES ARE ENCOUNTERED, THEY SHALL BE REMOVED IF THEY INTERFERE WITH PROPOSED PILES. IF EXISTING PILES DO NOT INTERFERE, THEY MAY REMAIN IN PLACE BUT SHALL BE CUT DOWN TO 6'-0" BELOW PROPOSED BOTTOM OF FOOTING. EXISTING PILE REMOVAL SHALL BE PAID FOR AS "PILE, TIMBER, REM".

REMOVAL NOTES

JOB NO. (115633A-#12493)

- DURING BRIDGE REMOVAL OPERATIONS, CARE SHALL BE TAKEN BY THE CONTRACTOR TO AVOID DAMAGING THE ADJACENT BUILDINGS THAT ARE TO REMAIN. DAMAGE TO THE BUILDINGS CAUSED BY CONTRACTORS REMOVAL OPERATIONS SHAL BE REPAIRED BY THE CONTRACTOR, AT THE CONTRACTORS EXPENSE.

- REMOVAL OF BRIDGE INCLUDED IN PAY ITEM "STRUCTURE, REM, PORTIONS, MOD"

REMOVAL SHEET

JOB NO. (115633A-#12493)

THE ONLY ITEMS OF WORK TO BE DONE FROM THIS SHEET ARE IDENTIFIED BY USING THE LEGEND BELOW, LABELED WITH THIS PROJECTS JOB NUMBER

PROPOSED WORK

DENOTES REMOVAL PORTIONS

REV #	DATE	DESCRIPTION	BY

NOT VALID FOR CONSTRUCTION UNLESS "SIGNED AND DATED"

WADETRIM
500 Griswold, Suite 2500
Detroit, MI 48226
(313) 961-1550
FAX 313.961.0898
www.wadetrim.com

Building relationships on a foundation of excellence

CITY OF DETROIT
DEPARTMENT OF PUBLIC WORKS
CITY ENGINEERING DIVISION
WILKINS ST. OVER DEQUINDRE CUT S.N. 12493
EXISTING BRIDGE PLANS
EXISTING PLAN (REM)

ISSUED FOR: DATE: BY:

JOB NO. DTE 2025-08T

SHEET 14 (387)

WILKINS STREET BRIDGE

© Wade Trim Group, Inc.

PROJECT MANAGER: - FIELD BOOK INFORMATION: -
C:\pw_work\cpowell\pw\d0350142\SDP-PLTS-REMOVAL.dgn
PLOTTED 5/21/2013 10:24:13 AM BY Cpowell

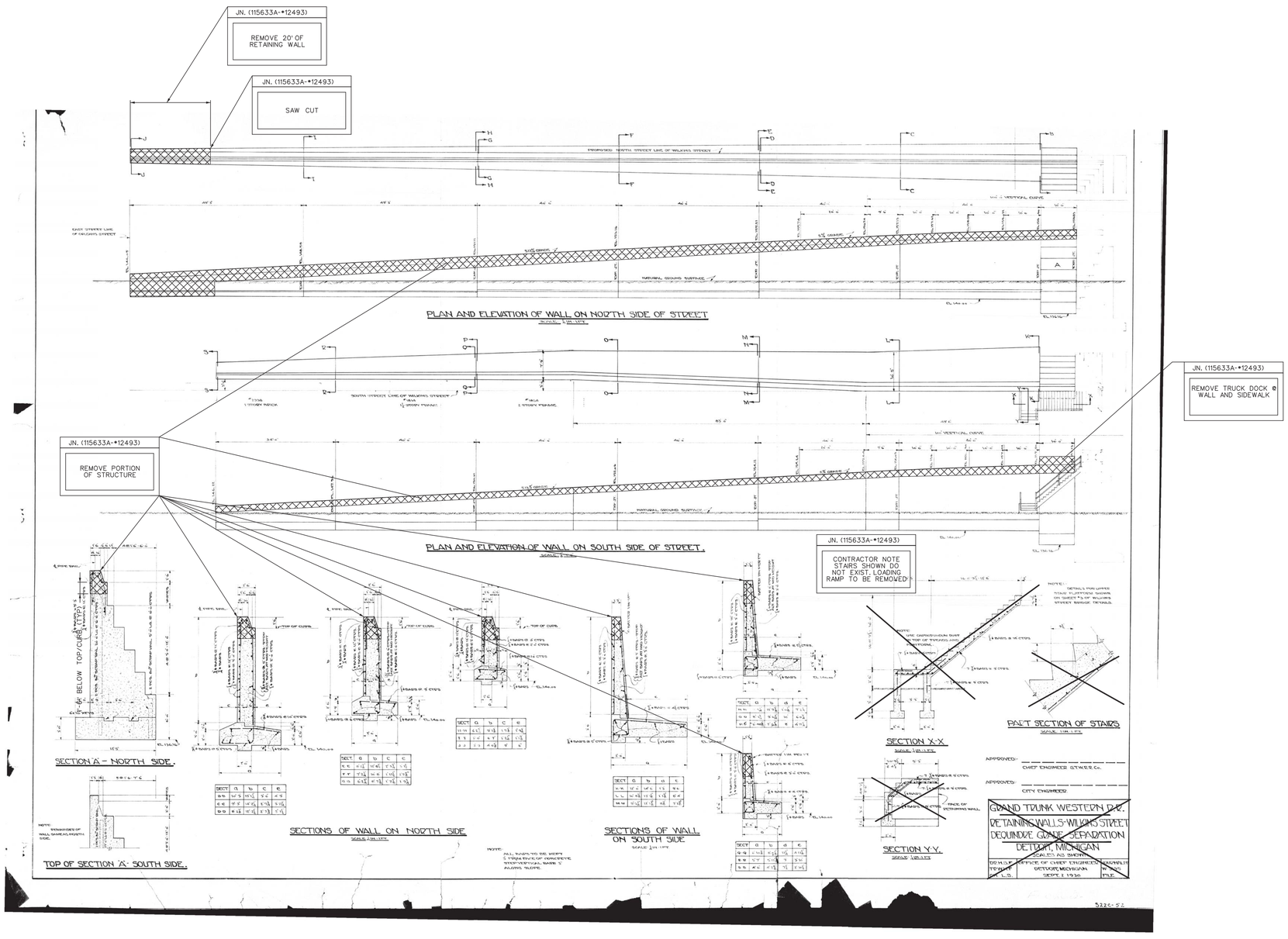

REMOVAL NOTES

JOB NO. (115633A-#12493)

- DURING BRIDGE REMOVAL OPERATIONS, CARE SHALL BE TAKEN BY THE CONTRACTOR TO AVOID DAMAGING THE ADJACENT BUILDINGS THAT ARE TO REMAIN. DAMAGE TO THE BUILDINGS CAUSED BY CONTRACTORS REMOVAL OPERATIONS SHAL BE REPAIRED BY THE CONTRACTOR, AT THE CONTRACTORS EXPENSE.

- REMOVAL OF PORTIONS OF RETAINING WALL INCLUDED IN PAY ITEM 'STRUCTURES, REM PORTIONS, MOD'.

REMOVAL SHEET

JOB NO. (115633A-#12493)

THE ONLY ITEMS OF WORK TO BE DONE FROM THIS SHEET ARE IDENTIFIED BY USING THE LEGEND BELOW, LABELED WITH THIS PROJECTS JOB NUMBER

PROPOSED WORK

DENOTES REMOVAL PORTIONS

REV #	DATE	DESCRIPTION	BY

NOT VALID FOR CONSTRUCTION UNLESS SIGNED AND DATED

WADETRIM
500 Griswold, Suite 2500
Detroit, MI 48226
(313) 961-1830
FAX: 313.961.0898
www.wadetrim.com

Building relationships on a foundation of excellence.

CITY OF DETROIT
DEPARTMENT OF PUBLIC WORKS
CITY ENGINEERING DIVISION
WILKINS ST. OVER DEQUINDRE CUT S.N. 12493
EXISTING BRIDGE PLANS
EXISTING PLAN (REM)

ISSUED FOR: DATE: BY:

JOB NO. DTE 2025-08T

SHEET 15 (388)

© Wade Trim Group, Inc.

WILKINS STREET BRIDGE

PROJECT MANAGER: - FIELD BOOK INFORMATION: -
C:\pw_work\cameronm\d0350142\SBP-PLS-REM01142.dgn
PLOTTED 5/21/2013 10:26:23 AM BY Cametana

REMOVAL NOTES

JOB NO. (115633A-*12493)

- DURING BRIDGE REMOVAL OPERATIONS, CARE SHALL BE TAKEN BY THE CONTRACTOR TO AVOID DAMAGING THE ADJACENT BUILDINGS THAT ARE TO REMAIN. DAMAGE TO THE BUILDINGS CAUSED BY CONTRACTORS REMOVAL OPERATIONS SHAL BE REPAIRED BY THE CONTRACTOR, AT THE CONTRACTORS EXPENSE.

- REMOVAL OF PORTIONS OF RETAINING WALL INCLUDED IN PAY ITEM "STRUCTURES, REM PORTIONS, MOD".

REMOVAL SHEET

JOB NO. (115633A-*12493)

THE ONLY ITEMS OF WORK TO BE DONE FROM THIS SHEET ARE IDENTIFIED BY USING THE LEGEND BELOW, LABELED WITH THIS PROJECTS JOB NUMBER

PROPOSED WORK

DENOTES REMOVAL PORTIONS

REV #	DATE	DESCRIPTION	BY

NOT VALID FOR CONSTRUCTION UNLESS SIGNED AND DATED

WADETRIM
500 Griswold, Suite 2500
Detroit, MI 48226
313.961.3650
FAX 313.961.0898
www.wadetrim.com

Building relationships on a foundation of excellence

CITY OF DETROIT
DEPARTMENT OF PUBLIC WORKS
CITY ENGINEERING DIVISION
WILKINS ST. OVER DEQUINDRE CUT S.N. 12493
EXISTING BRIDGE PLANS
EXISTING PLAN (REM)

ISSUED FOR: DATE: BY:

JOB NO. DTE 2025-08T

SHEET 16 (389)

WILKINS STREET BRIDGE

© Wade Trim Group, Inc.

PROJECT MANAGER: - FIELD BOOK INFORMATION: -
c:\pw_work\cornelpm\d0350142\SDP_PLTS-REMOVAL.dgn
PLOTTED 5/21/2013 10:28:39 AM BY Cornelpm

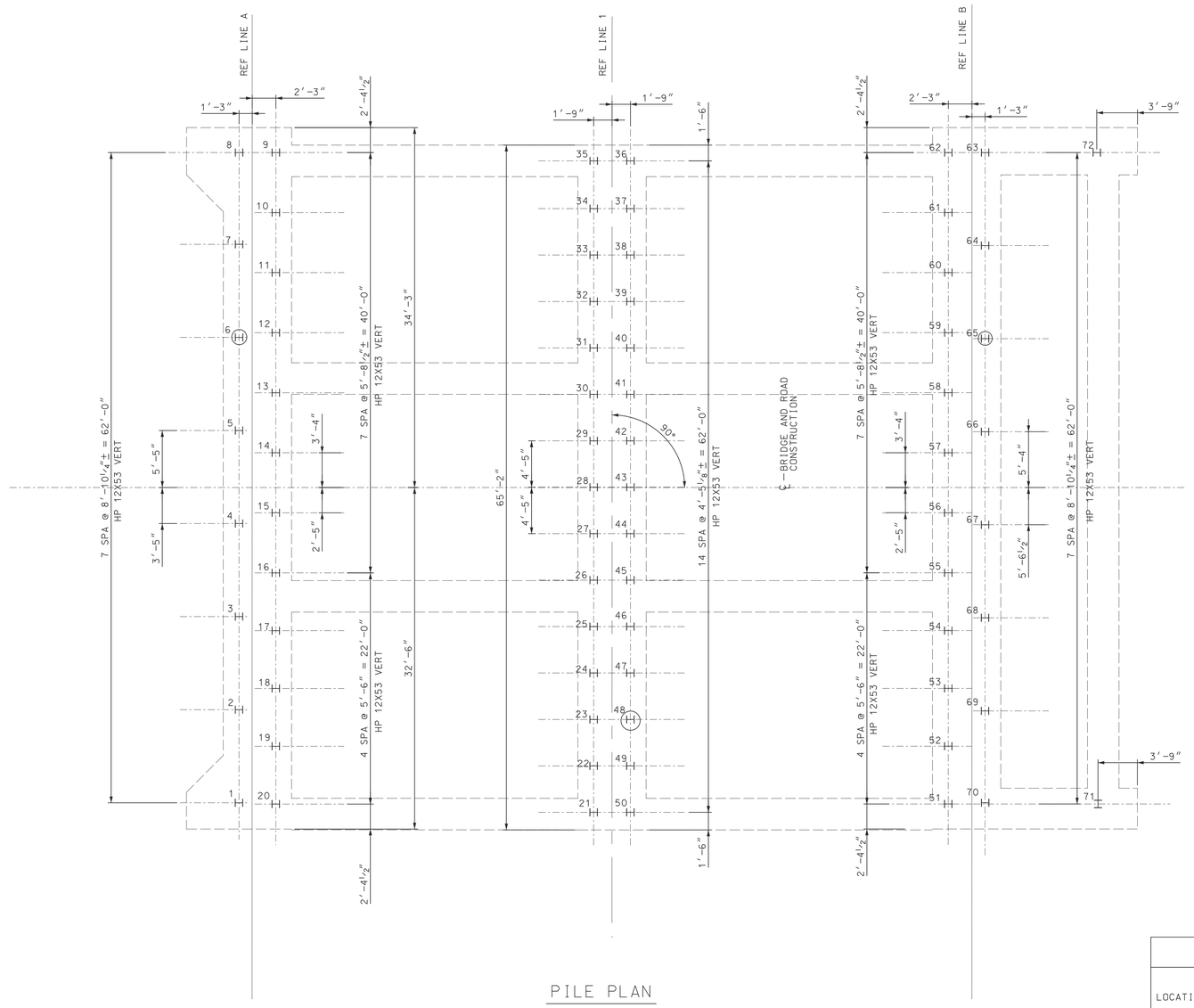

PILE PLAN

NOTES:

DRIVE ALL PILES TO A NOMINAL PILE DRIVING RESISTANCE NOT LESS THAN OF 350 KIPS. NEGLECTING DOWNDRAGE (270 KIPS INCLUDING DOWNDRAG). DETERMINE NOMINAL PILE DRIVING RESISTANCE (Rndr) USING DYNAMIC TEST WITH SIGNAL MATCHING (P.D.A. TESTING).

THE ESTIMATED PILE LENGTH IS BASED ON THE STATIC ANALYSIS.

STEEL PILES SHALL BE HP 12X53.

PILES ARE TO BE DRIVEN TO SUCH ACCURACY THAT THE ENDS OF THE PILES TO BE EMBEDDED IN THE CONCRETE ARE WITHIN 3" OF THE LOCATION SHOWN ON THE PLANS.

USE STEEL FOR H-PILES THAT HAVE A YIELD STRENGTH NOT LESS THAN 50,000 PSI.

THE ESTIMATED FACTORED DOWNDRAG AFTER PILE DRIVING IS 80 KIPS. THE REDUCED FACTORED RESISTANCE (Rstat) INCLUDING POTENTIAL FOR DOWNDRAG WITH PDA VERIFICATION IS 175 KIPS

ALL PILES SHALL BE PREBORED TO EL. 115'-0" OR MINIMUM TEN FEET BELOW PROPOSED WATERMAIN INVERT, WHICHEVER IS LOWER. FILL PREBORE WITH FLOWABLE FILL AFTER PILE INSTALLATION.

ALL PILES SHALL BE DRIVEN WITH PROTECTIVE CAST STEEL PILE POINTS. SEE SPECIAL PROVISION FOR DETAILS.

ESTIMATED PILE TIP ELEVATIONS:
- -ABUTMENT A = EL. 2.00 FT
- -PIER 1 = EL. -3.00 FT
- -ABUTMENT B = EL. 2.00 FT

LEGEND

⊢ --DENOTES VERTICAL PILES.

(⊢) --DENOTES VERTICAL TEST PILES.

MISCELLANEOUS QUANTITIES

1224	FT	PREBORE, FDN PILING
1	LS	PILE DRIVING EQUIPMENT, FURN (SN 12493)
9612	FT	PILE, STEEL, FURN AND DRIVEN, 12 INCH
3	EA	TEST PILE, STEEL, 12 INCH
69	EA	PILE POINT, STEEL
80	CYD	FLOWABLE FILL
1	EA	TEST PILE, FURN DYNAMIC ANALYSIS EQUIPMENT
3	EA	TEST PILE, DYNAMIC ANALYSIS
1	LS	MONITORING VIBRATIONS (SN 12493)
241	EA	PILE, STEEL, SPLICE

STEEL H-PILES: HP 12X53

LOCATION	PILE TYPE	NUMBER OF PILES	ESTIMATED LENGTH FURNISHED & DRIVEN		PILE POINTS (EACH)	SPLICES (EACH)	CUT-OFF ELEV.
			EACH LFT	TOTAL LFT			
ABUT A	TEST	1	141	141	1		132'-6"
	VERTICAL	19	131	2489	19		132'-6"
PIER 1	TEST	1	146	146	1		132'-6"
	VERTICAL	29	136	3944	29		132'-6"
ABUT B	TEST	1	141	141	1		132'-6"
	VERTICAL	21	131	2751	21		132'-6"
TOTAL				9612	72	241	

REV #	DATE	DESCRIPTION	BY

NOT VALID FOR CONSTRUCTION UNLESS SIGNED AND DATED

WADETRIM
Building relationships on a foundation of excellence
500 Griswold, Suite 2500
Detroit, MI 48226
313.961.1830
FAX: 313.961.0898
www.wadetrim.com

CITY OF DETROIT
DEPARTMENT OF PUBLIC WORKS
CITY ENGINEERING DIVISION
WILKINS ST. OVER DEQUINDRE CUT S.N. 12493
PILE PLAN

ISSUED FOR: DATE: BY:

JOB NO. DTE 2025-08T

SHEET 17 (390)

WILKINS STREET BRIDGE

© Wade Trim Group, Inc.

PLOTTED 5/21/2013 10:35:44 AM BY Cametana
PROJECT MANAGER: FIELD BOOK INFORMATION: -
C:\Pw_work\cametana\d0350142\CFP-01_PILEPlan.dgn

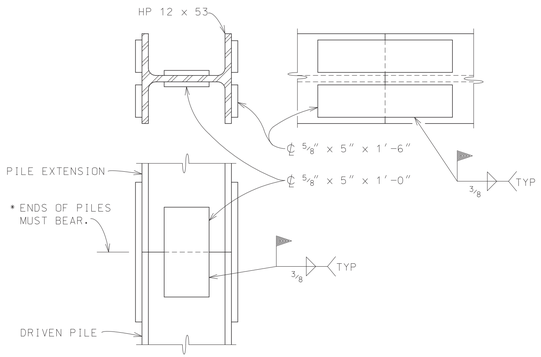

SPLICE DETAILS

* SET PILE EXTENSION IN PLACE WITH SPLICE PLATES ATTACHED. TAP SEVERAL TIMES WITH THE HAMMER TO IMPROVE BEARING CONTACT. THEN COMPLETE WELDING OF PLATES TO THE LOWER SECTION.

WELDED PILE SPLICE - SPLICE PLATES

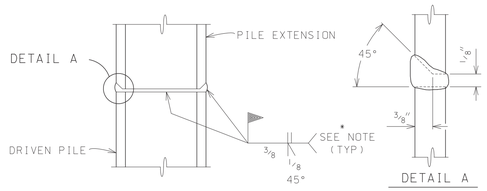

SPLICE DETAILS

FOR PILES IN PLACE (HORIZONTAL JOINT)

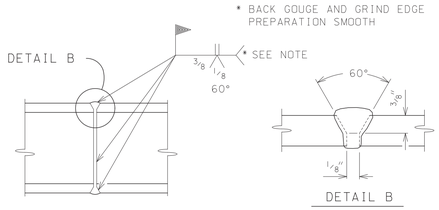

SPLICE DETAILS

FOR PILES IN HORIZONTAL POSITION

WELDED PILE SPLICE - BUTT JOINT

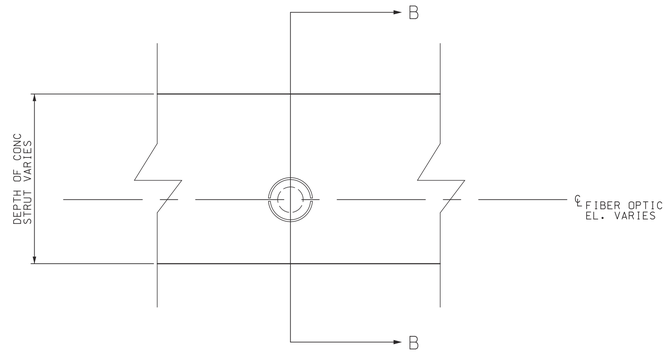

SECTION A-A

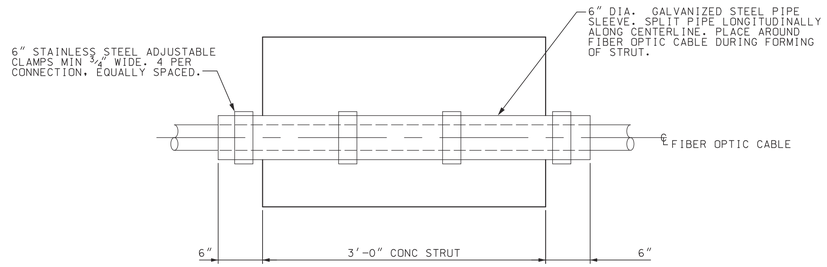

SECTION B-B

FIBER OPTIC CONDUIT DETAIL

CONTRACTOR NOTE:

SEE SPECIAL PROVISION ON FIBER OPTIC COORDINATION AND PROTECTION.

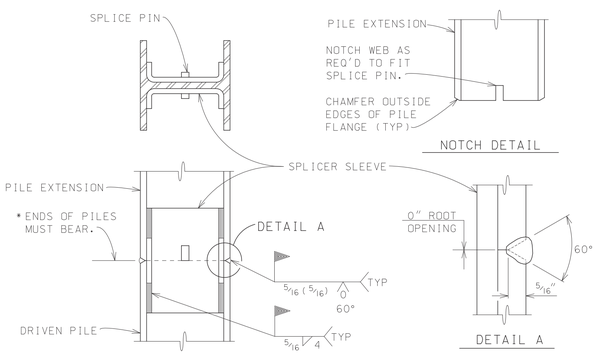

ALTERNATE SPLICE DETAILS

* SET PILE EXTENSION IN PLACE WITH SPLICE PLATES ATTACHED. TAP SEVERAL TIMES WITH THE HAMMER TO IMPROVE BEARING CONTACT. THEN COMPLETE WELDING OF PLATES TO THE LOWER SECTION.

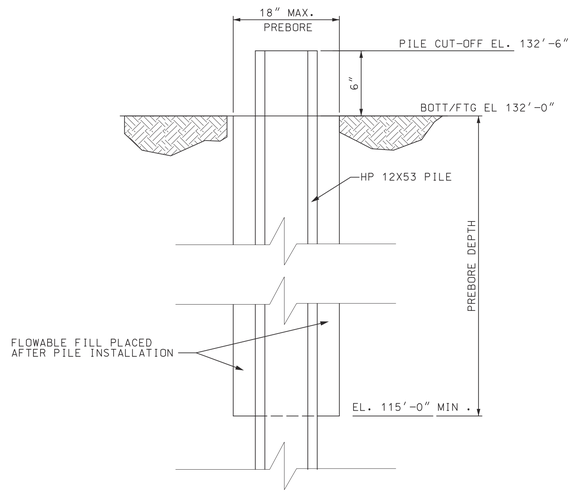

PILE PREBORE DETAIL

REV*	DATE	DESCRIPTION	BY

NOT VALID FOR CONSTRUCTION UNLESS SIGNED AND DATED

WADETRIM
500 Griswold, Suite 2500
Detroit, MI 48226
313.961.1860
FAX: 313.961.0898
www.wadetrim.com

Building relationships on a foundation of excellence.

CITY OF DETROIT
DEPARTMENT OF PUBLIC WORKS
CITY ENGINEERING DIVISION
WILKINS ST. OVER DEQUINDRE CUT S.N. 12493
PILE DETAILS

ISSUED FOR: DATE: BY:

JOB NO. DTE 2025-08T

SHEET 18 (391)

WILKINS STREET BRIDGE

© Wade Trim Group, Inc.

PROJECT MANAGER: -
FIELD BOOK INFORMATION: -
C:\pw_work\cometana\d0350142\CFP-PL1S-PileDetailsPrevdgn
PLOTTED 5/21/2013 10:37:25 AM BY Cometana

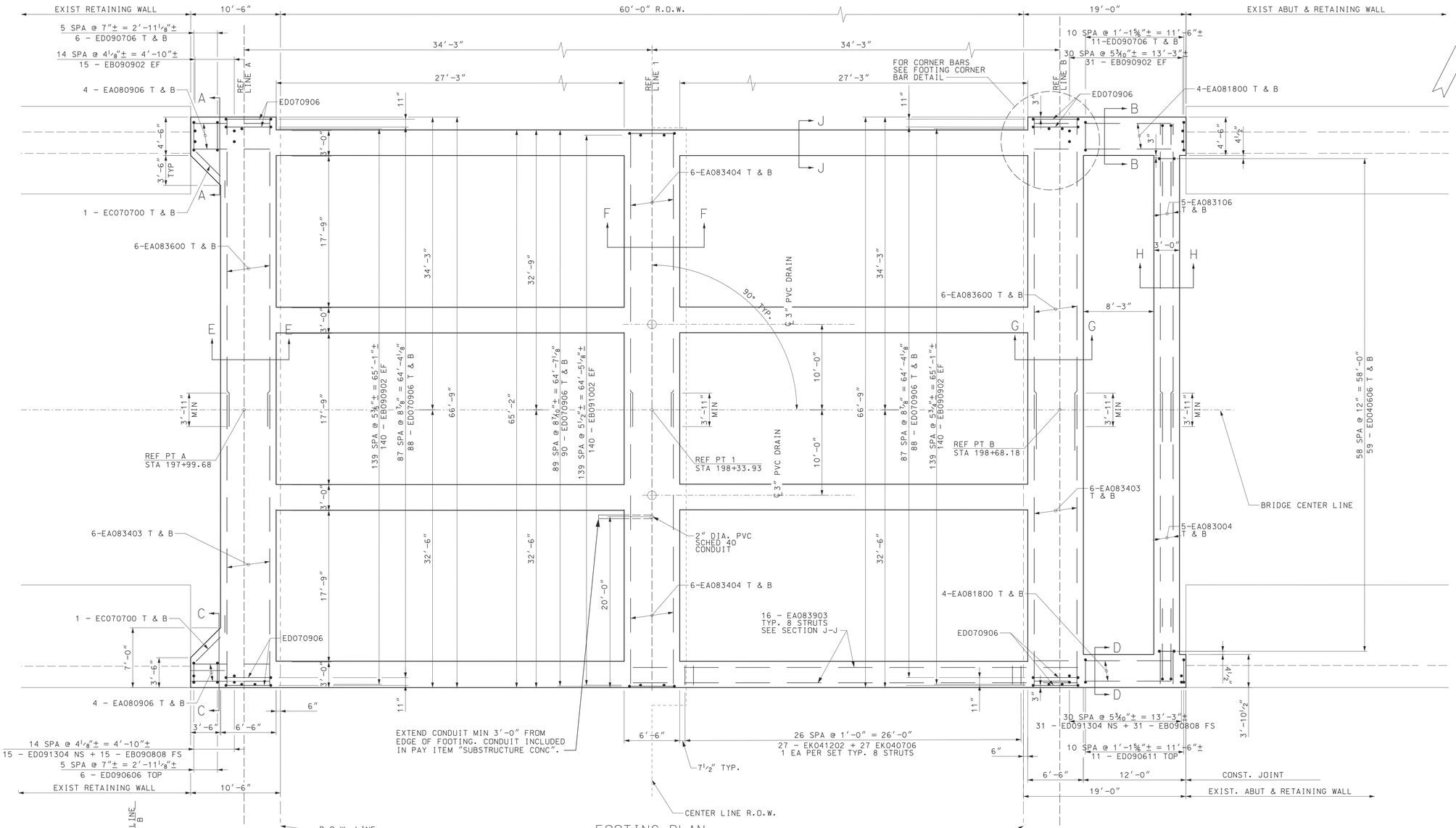

FOOTING PLAN

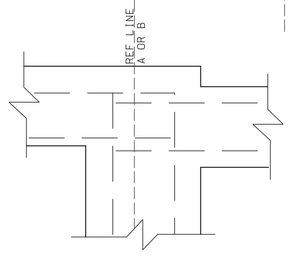

FOOTING PLAN @ CORNER

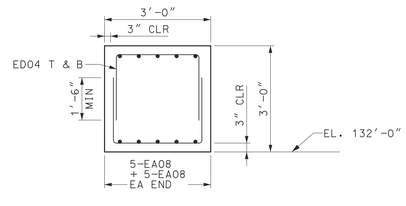

SECTION H-H

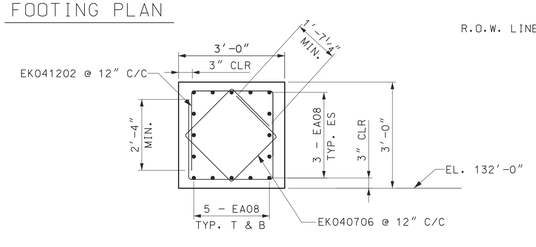

SECTION J-J

FOOTING CONC QUANTITIES		
SUBSTRUCTURE CONC		
LOCATION	QUANTITY	UNIT
ABUT A	110	CYD
PIER 1	50	CYD
ABUT B	136	CYD

NOTES:

CONSTRUCTION JOINTS IN FOOTINGS ARE OPTIONAL.

THE MATERIAL PROPERTIES OF CONCRETE, GRADE S2, SUBFOOTING SHALL BE THOSE OF CONCRETE GRADE S2.

CONCRETE QUANTITIES FOR ABUT A & ABUT B INCLUDE CONCRETE QUANTITIES FOR TENSION AND COMPRESSION STRUTS.

REV #	DATE	DESCRIPTION	BY

NOT VALID FOR CONSTRUCTION UNLESS SIGNED AND DATED

WADETRIM
500 Griswold, Suite 2500
Detroit, MI 48226
(313) 962-7000
FAX: 313.961.0898
www.wadetrim.com

Building relationships on a foundation of excellence

CITY OF DETROIT
DEPARTMENT OF PUBLIC WORKS
CITY ENGINEERING DIVISION
WILKINS ST. OVER DEQUINDRE CUT S.N. 12493
FOOTING PLAN

ISSUED FOR: DATE: BY:

JOB NO. DTE 2025-08T

SHEET 19 (392)

WILKINS STREET BRIDGE

© Wade Trim Group, Inc.

PROJECT MANAGER: - FIELD BOOK INFORMATION: -
C:\pw_work\cometona\d0350142\CFP-PLTS Footing\footing.dwg
PLOTTED 5/21/2013 10:38:46 AM BY Cometona

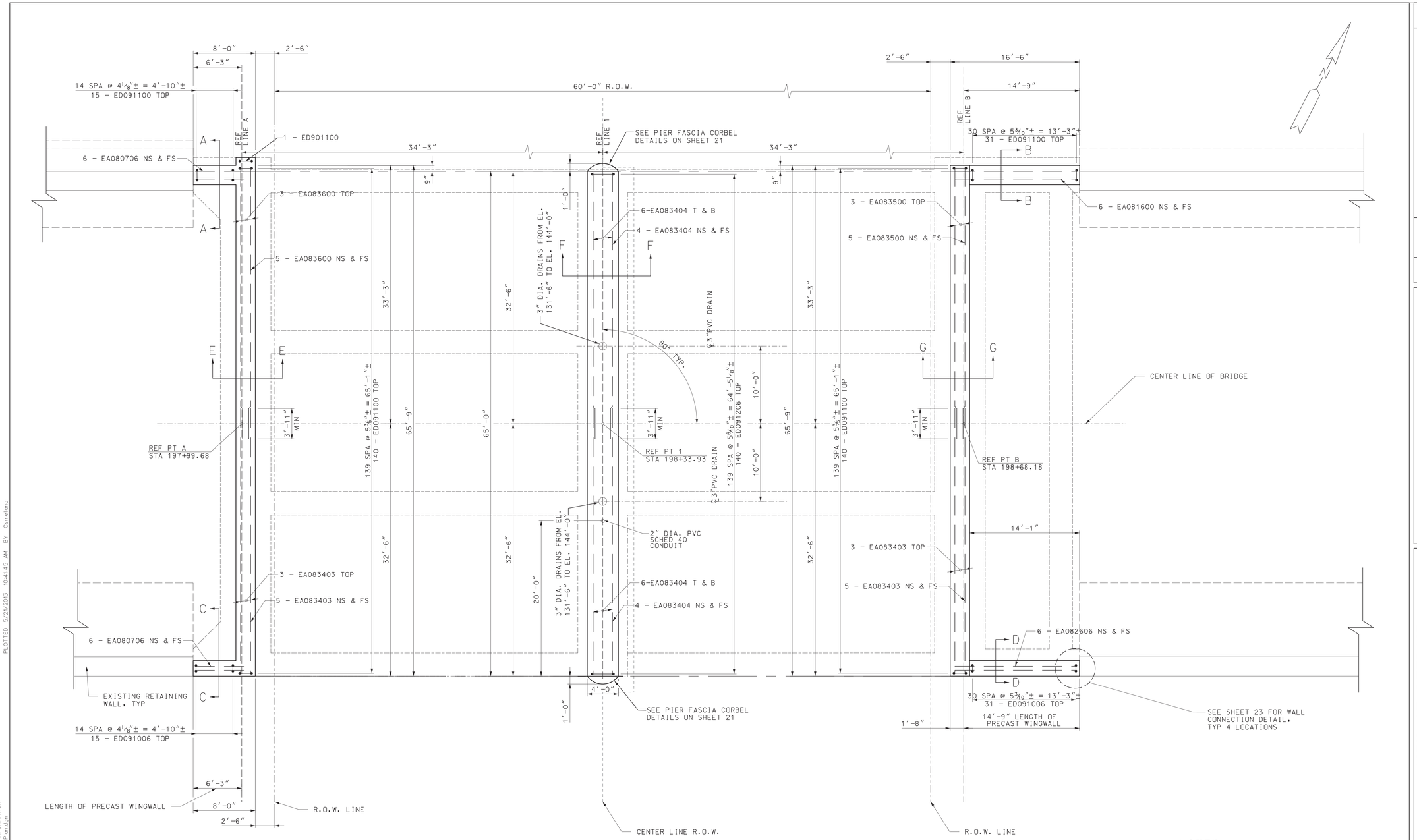

SILL WALL PLAN

SILL WALL CONC QUANTITIES		
SUBSTRUCTURE CONC		
LOCATION	QUANTITY	UNIT
ABUT A	60	CYD
PIER 1	80	CYD
ABUT B	67	CYD

NOTES:

EXTENT OF EXISTING SOUTH RETAINING WALLS UNKNOWN. WALLS SHOWN IN PLAN ARE BASED ON EXISTING 1929 PLANS. CONTRACTOR TO FIELD VERIFY.

CONCRETE SURFACE COATING SHALL BE APPLIED TO THE ENTIRE EXPOSED SURFACES OF THE C.I.P. CONC SILL WALLS. SEE WALL DETAILS FOR EXTENT.

AT NO TIME PRIOR TO ERECTING ARCHES, SHALL THE HEIGHT OF THE BACKFILL ON THE BACKSIDE OF THE ABUTMENTS BE HIGHER THAN THE BACKFILL ON THE FRONT SIDE.

FOR VERTICAL BARS FROM FOOTING INTO SILL WALLS, SEE FOOTING PLAN.

REV #	DATE	DESCRIPTION	BY

NOT VALID FOR CONSTRUCTION UNLESS SIGNED AND DATED

WADETRIM
500 Griswold, Suite 2500
Detroit, MI 48226
313.962.7000
FAX: 313.961.0898
www.wadetrim.com

Building relationships on a foundation of excellence.

CITY OF DETROIT
DEPARTMENT OF PUBLIC WORKS
CITY ENGINEERING DIVISION
WILKINS ST. OVER DEQUINDRE CUT S.N. 12493
SILL WALL PLAN

ISSUED FOR: DATE: BY:

JOB NO. DTE 2025-08T

SHEET 20 (393)

WILKINS STREET BRIDGE

© Wade Trim Group, Inc.

PROJECT MANAGER: - FIELD BOOK INFORMATION: -
C:\pw_work\cpenetrna\d0350142\CFP-FLTS-wallplan.dgn
PLOTTED 5/21/2013 10:41:45 AM BY Cpenetrna

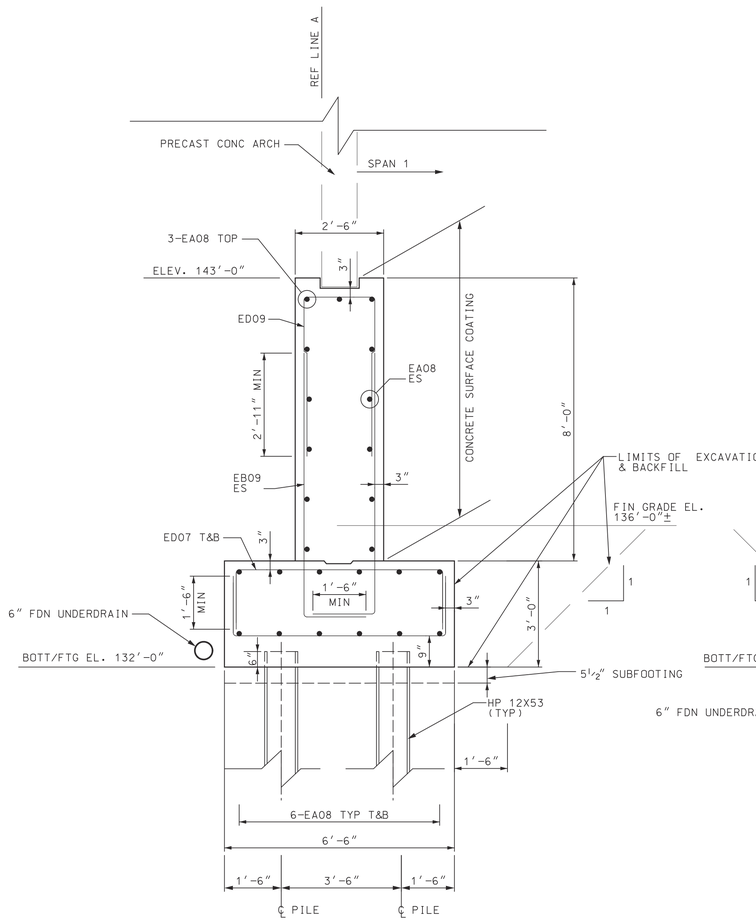

SECTION E-E

SCALE: ½' = 1'

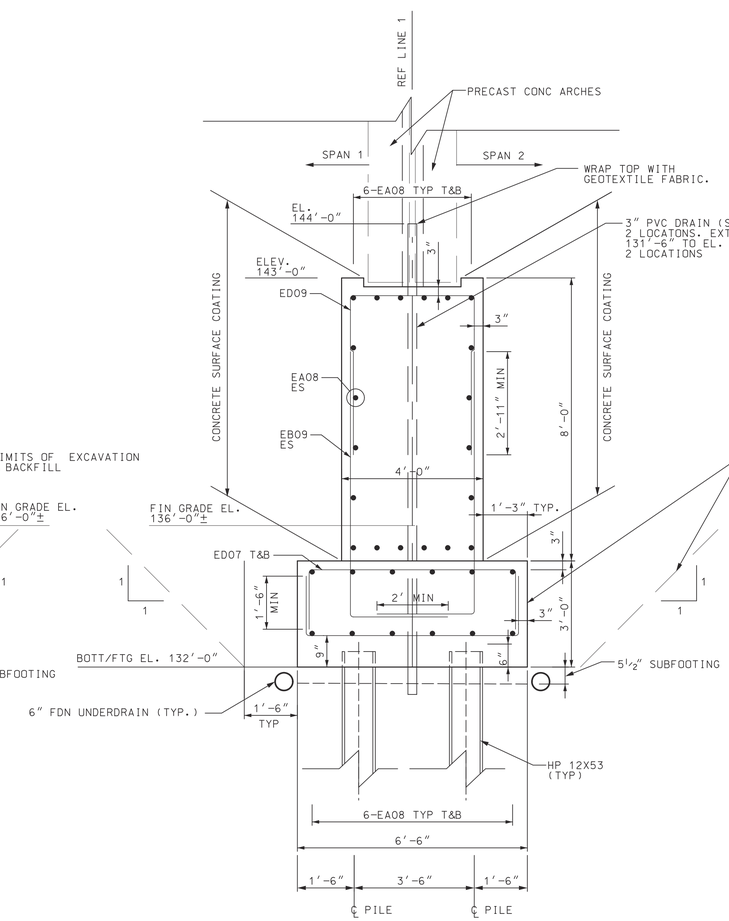

SECTION F-F

SCALE: ½' = 1'

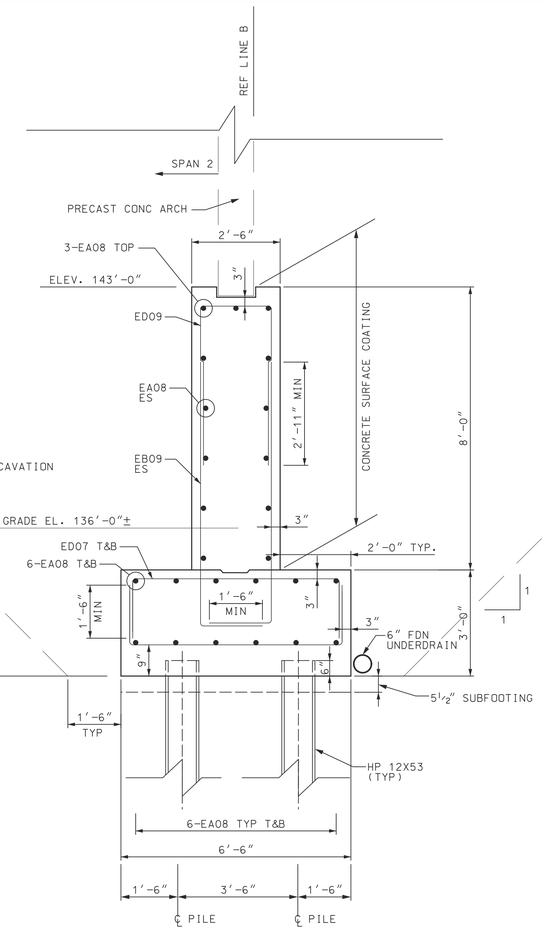

SECTION G-G

SCALE: ½' = 1'

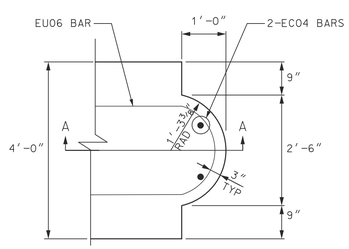

SECTIONAL PLAN

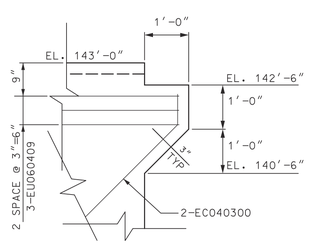

SECTION A-A

PIER FASCIA CORBEL DETAIL

TYP EA END OF PIER

NOTES:

JWP DENOTES JOINT WATERPROOFING.

NS DENOTES NEAR SIDE.

FS DENOTES FAR SIDE.

ES DENOTES EACH SIDE.

FOR BEVEL AND MOLDING DETAILS, SEE STANDARD PLAN B-103-SERIES.

FOR PILE QUANTITIES, LAYOUT AND NOTES SEE SHEETS 17-18.

LOW TEMPERATURE PROTECTION OF CONCRETE SHALL BE ACCORDING TO SECTION 706.03 J. OF THE STANDARD SPECIFICATIONS FOR CONSTRUCTION. LOW TEMPERATURE PROTECTION OF CONCRETE WILL NOT BE PAID FOR SEPERATELY, BUT WILL BE INCLUDED IN THE BID ITEM "STRUCTURE CONC".

SEE DETAILS, SHEETS 19 & 20 FOR LIMITS OF TEMPORARY SHEETING.

SEE SPECIAL PROVISION FOR CONC SURFACE COATING.

PVC DRAINS AT PIER FOUNDATIONS SHALL BE 3" DIA. SCHEDULE 80 PPIPE. IT SHALL BE INCLUDED IN THE PAY ITEM "SUBSTRUCTURE CONC".

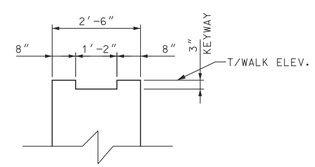

@ ABUTMENT

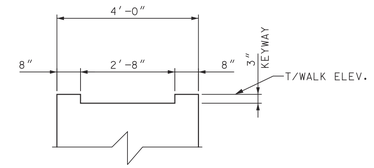

@ PIER

KEYWAY DETAILS

NO SCALE

MISCELLANEOUS QUANTITES

31	CYD	CONC, GRADE S2, SUBFOOTING
503	CYD	SUBSTRUCTURE CONC
125	SFT	STEEL SHEET PILING, TEMP, LEFT-IN-PLACE
629	CYD	CONC, LOW TEMPERATURE PROTECTION
16	EA	PROTECTIVE SLEEVE, FIBER OPTIC LINE

REV#	DATE	DESCRIPTION	BY

NOT VALID FOR CONSTRUCTION UNLESS "SIGNED AND DATED"

WADETRIM
500 Griswold, Suite 2500
Detroit, MI 48226
313.961.1450
FAX: 313.961.0898
www.wadetrim.com

Building relationships on a foundation of excellence.

CITY OF DETROIT
DEPARTMENT OF PUBLIC WORKS
CITY ENGINEERING DIVISION
WILKINS ST. OVER DEQUINDRE CUT S.N. 12493
SILL WALL DETAILS

ISSUED FOR: DATE: BY:

JOB NO. DTE 2025-08T

SHEET 21 (394)

WILKINS STREET BRIDGE

© Wade Trim Group, Inc.

PROJECT MANAGER: -
FIELD BOOK INFORMATION: -
C:\pw_work\cpowtom\d0350142\CWP_FL1S.dgn
PLOTTED 5/21/2013 10:42:56 AM BY Cometong

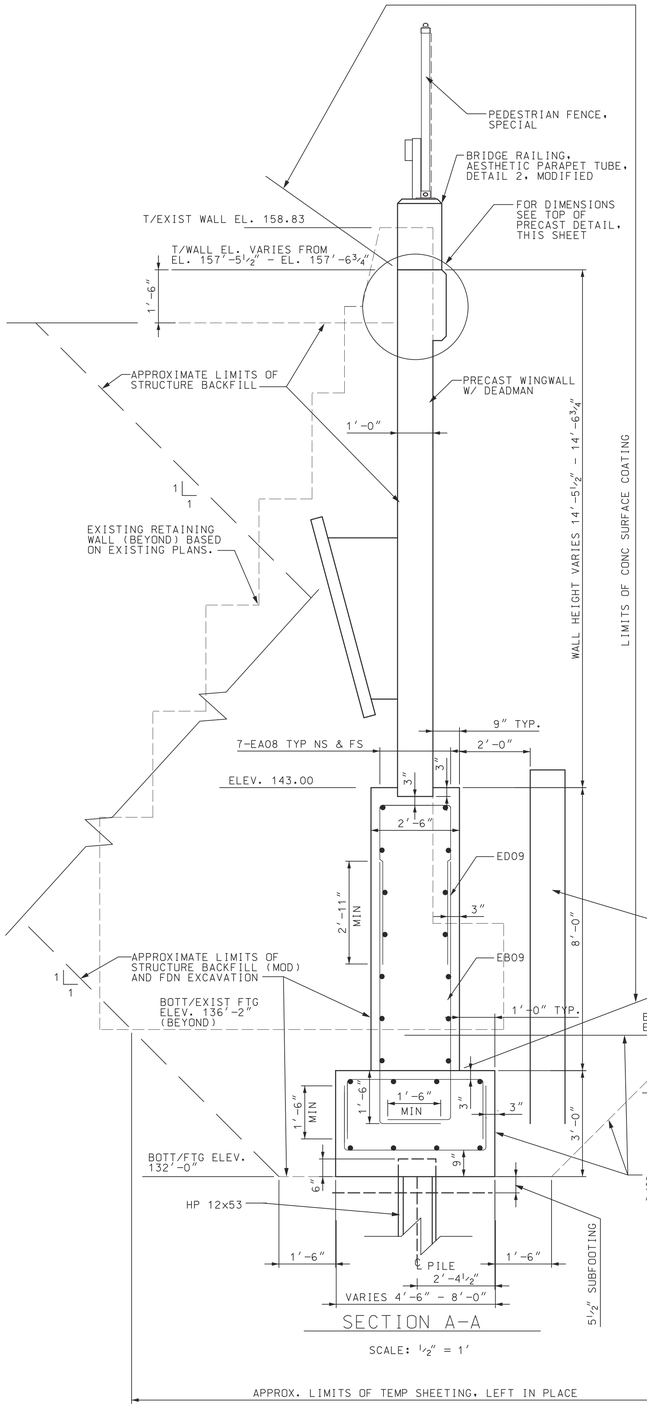

SECTION A-A

SCALE: ½" = 1'

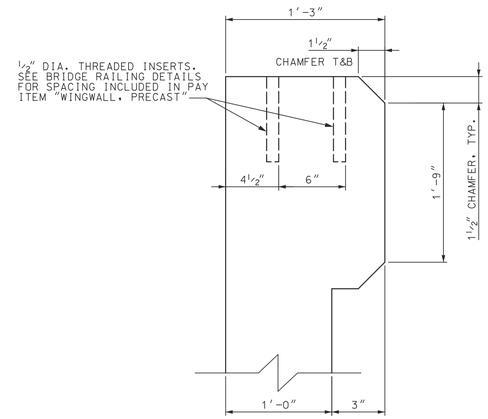

TOP OF PRECAST WALL DETAIL

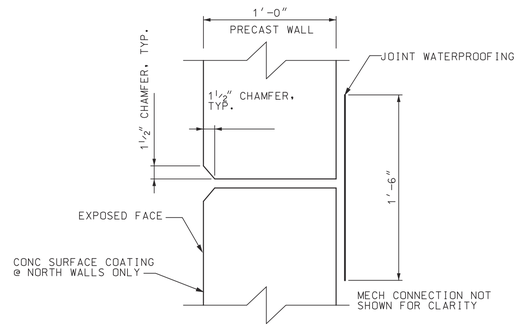

VERTICAL WALL JOINT DETAIL

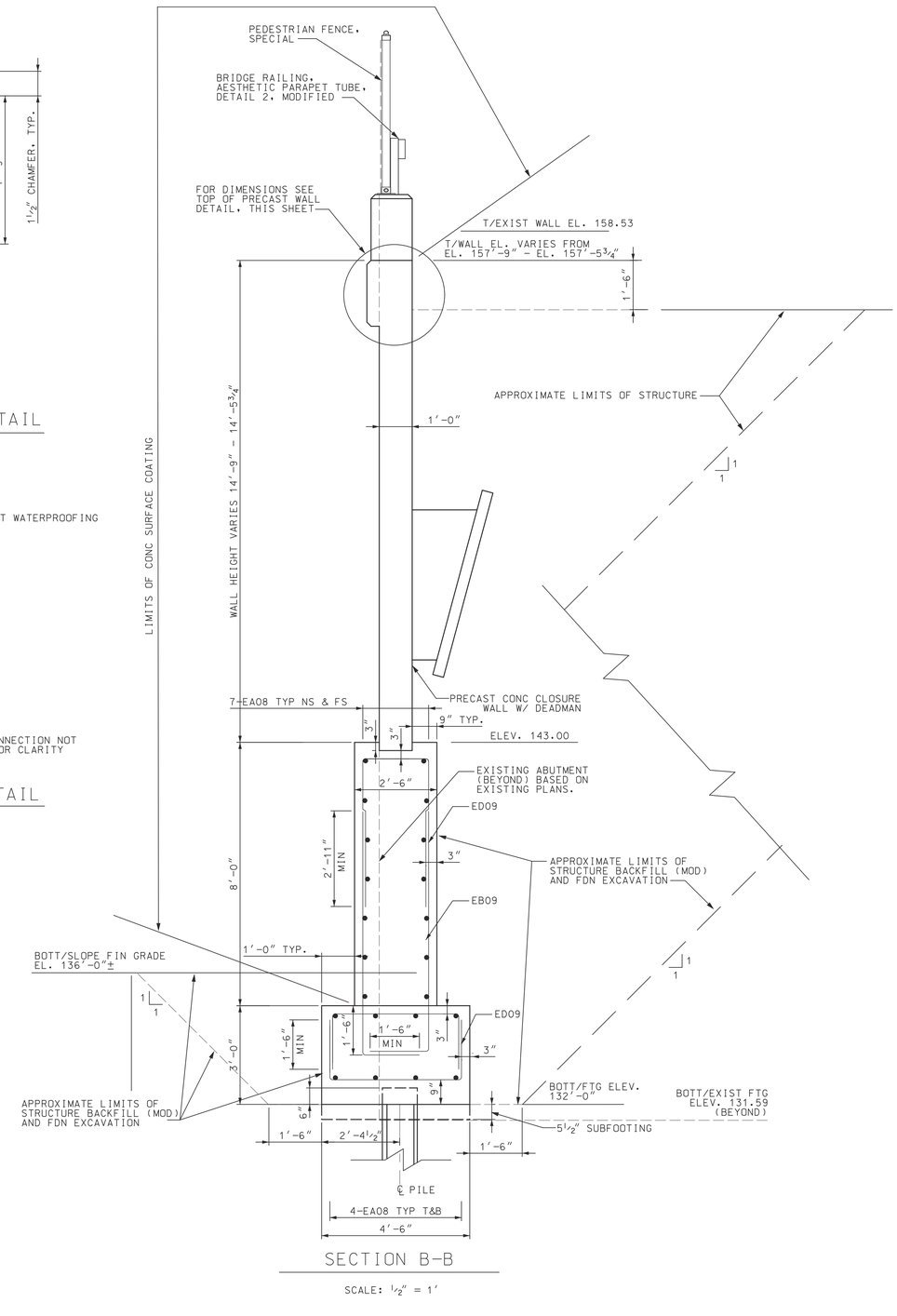

SECTION B-B

SCALE: ½" = 1'

REV#	DATE	DESCRIPTION	BY

NOT VALID FOR CONSTRUCTION UNLESS SIGNED AND DATED

WADETRIM
500 Griswold, Suite 2500
Detroit, MI 48226
313.961.3650
FAX 313.961.0898
www.wadetrim.com

Building relationships on a foundation of excellence.

CITY OF DETROIT
DEPARTMENT OF PUBLIC WORKS
CITY ENGINEERING DIVISION
WILKINS ST. OVER DEQUINDRE CUT S.N. 12493
WINGWALL DETAILS

ISSUED FOR: DATE: BY:

JOB NO. DTE 2025-08T

SHEET 22 (395)

© Wade Trim Group, Inc.

WILKINS STREET BRIDGE

PROJECT MANAGER: -
FIELD BOOK INFORMATION: -
c:\pw_work\cometona\d0350142\CWP-TS-SVerPlanDetWingWalls1.dgn
PLOTTED 5/21/2013 10:44:59 AM BY Cometona

NOTES

FOR DETAILS OF TEXTURING CONCRETE @ BRIDGE RAILINGS, SEE SHEETS 25-28.

A RUBBED SURFACE FINISH ON THE VERTICAL OUTSIDE SURFACES OF THE NORTH PRECAST WALLS IS REQUIRED FOR THIS STRUCTURE.

SEE SPECIAL PROVISIONS FOR CONCRETE SURFACE COATING.

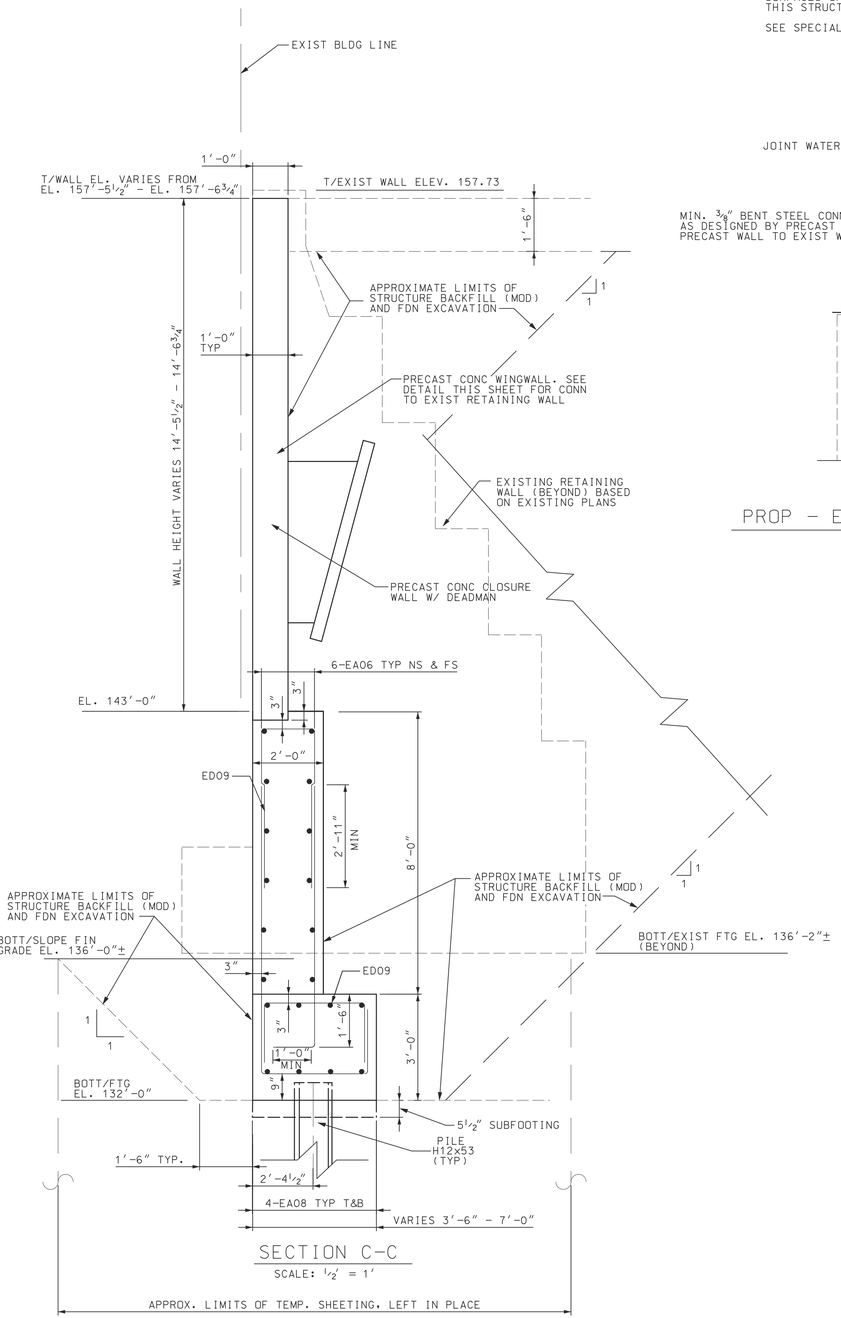

SECTION C-C

SCALE: ½' = 1'

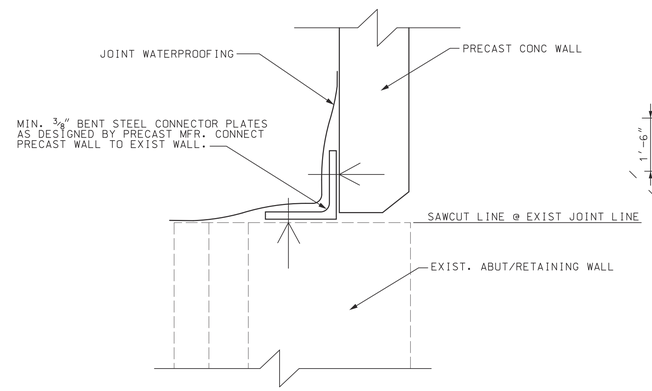

PROP - EXIST WALL CONNECTION DETAIL

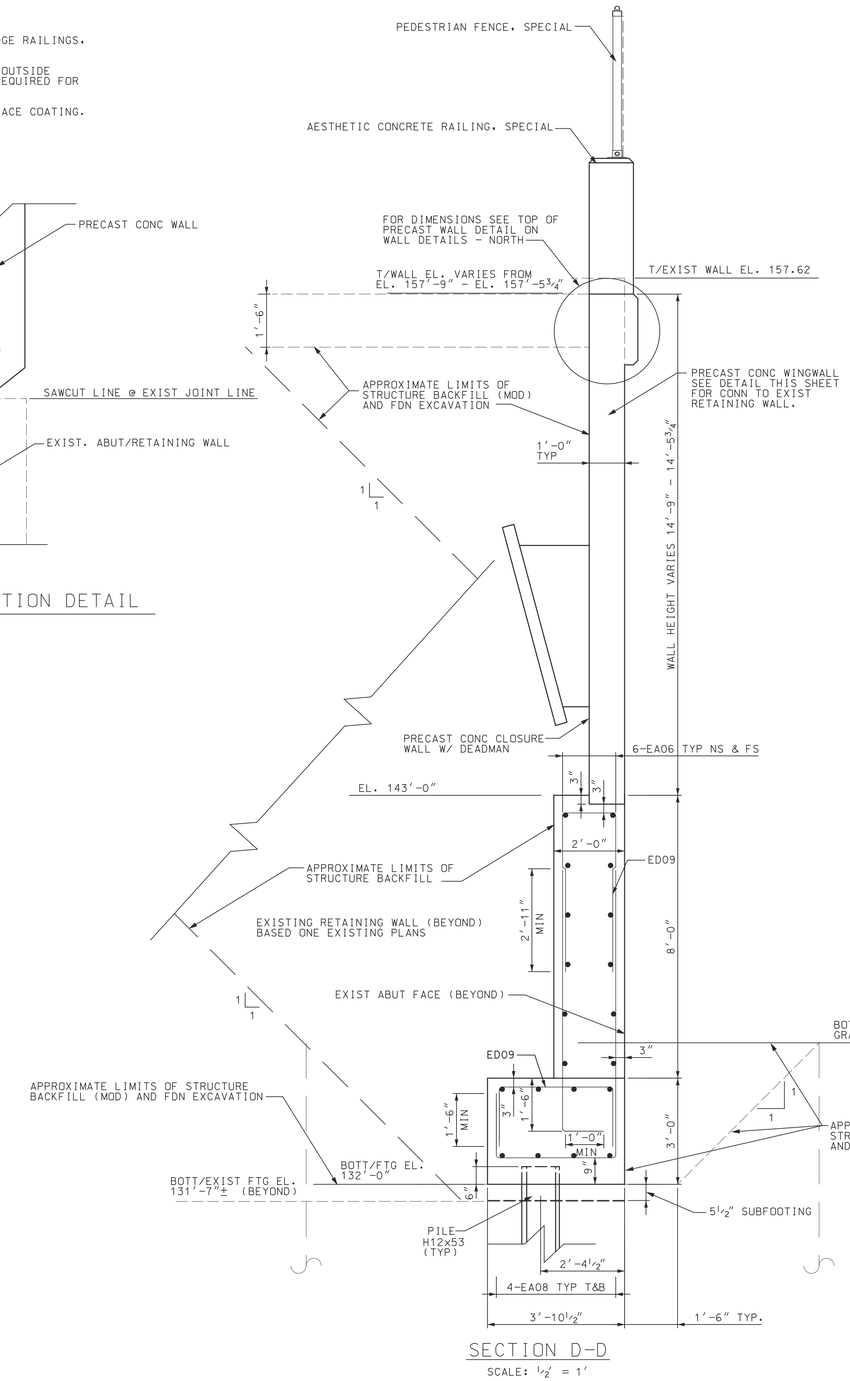

SECTION D-D

SCALE: ½' = 1'

REV#	DATE	DESCRIPTION	BY

NOT VALID FOR CONSTRUCTION UNLESS "SIGNED AND DATED"

WADETRIM
500 Griswold, Suite 2500
Detroit, MI 48226
313.961.3650
FAX 313.961.0898
www.wadetrim.com

Building relationships on a foundation of excellence

CITY OF DETROIT
DEPARTMENT OF PUBLIC WORKS
CITY ENGINEERING DIVISION
WILKINS ST. OVER DEQUINDRE CUT S.N. 12493
WINGWALL DETAILS

ISSUED FOR: DATE: BY:

JOB NO. DTE 2025-08T

SHEET 23 (396)

WILKINS STREET BRIDGE

© Wade Trim Group, Inc.

PROJECT MANAGER:
FIELD BOOK INFORMATION: -
c:\pw_work\corporation\d0350142\CWP-PLTS-WadeTrim\pb1wilkinsbrdwsh2.dgn
PLOTTED 5/21/2013 10:46:09 AM BY Corretona

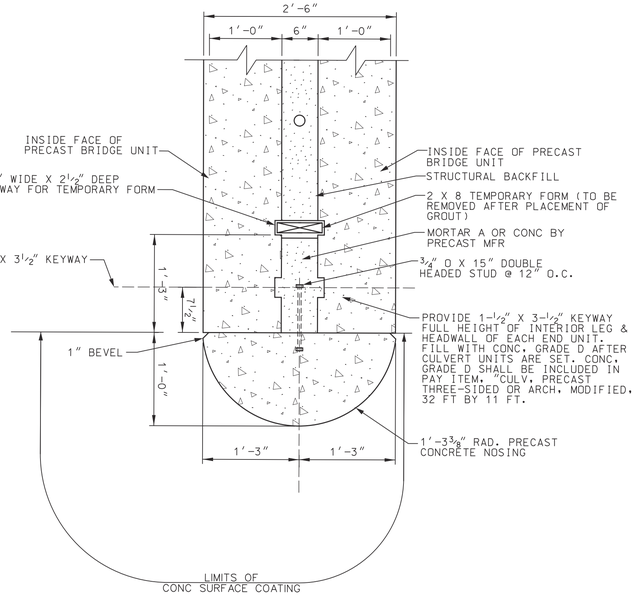

PIER FASCIA DETAIL

SEE DEQUINDRE CUT ELECTRICAL DRAWINGS FOR UNDERBRIDGE LIGHTING DIAGRAMS

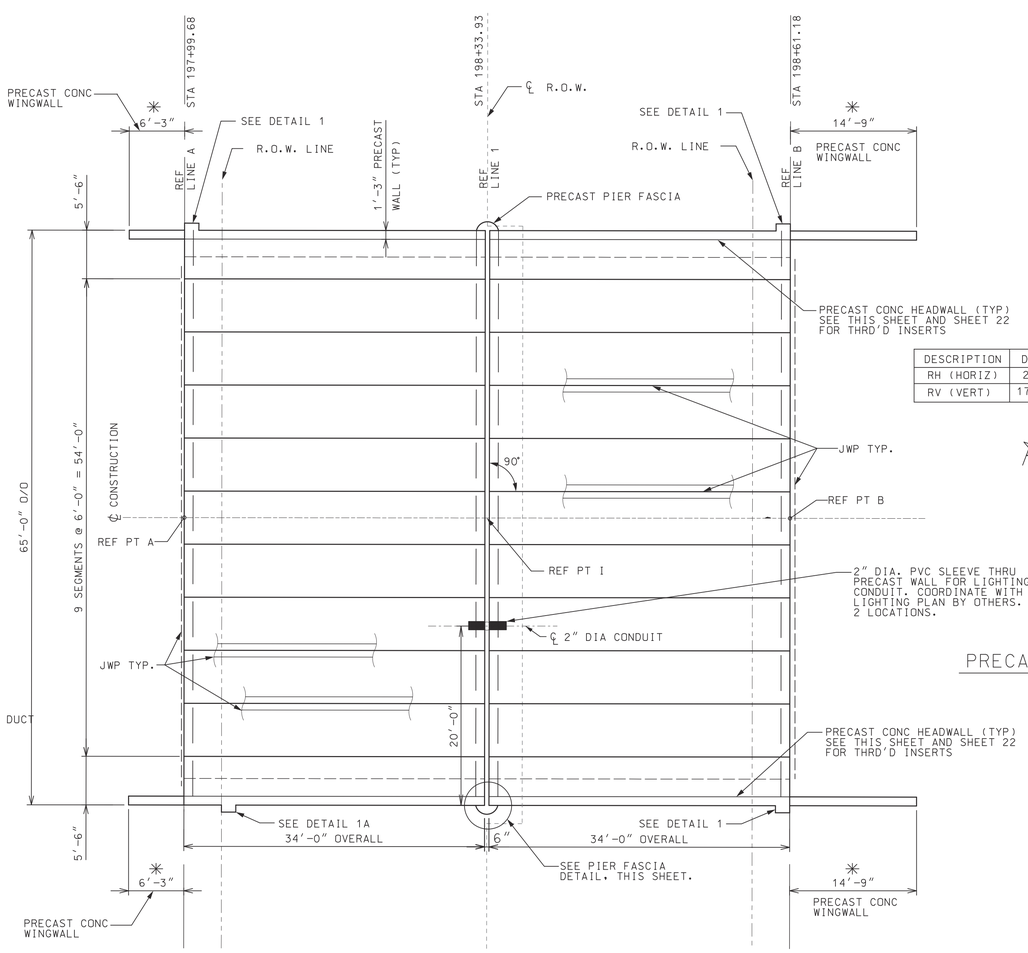

PRECAST ARCH LAYOUT

✳ CONTRACTOR TO FIELD VERIFY PRECAST WALL LENGTHS PRIOR TO FABRICATION.

DESCRIPTION	DEAD LOAD	LIVE LOAD	TOTAL LOAD
RH (HORIZ)	2.9 K/FT	2.7 K/FT	5.6 K/FT
RV (VERT)	17.1 K/FT	6.4 K/FT	23.5 K/FT

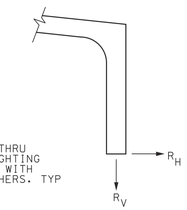

PRECAST ARCH REACTIONS

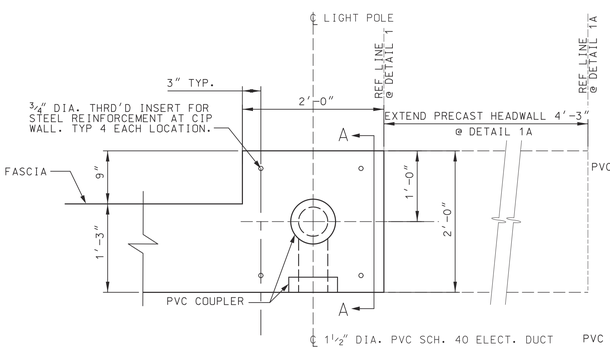

DETAIL 1

(AS SHOWN)

DETAIL 1A

(AS NOTED)

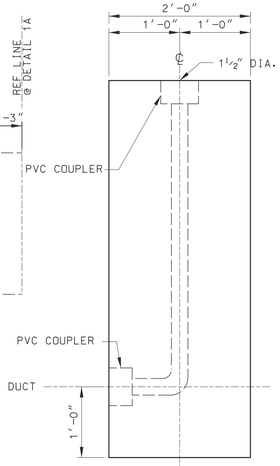

SECTION A-A

TOP/HEADWALL ELEVATIONS		
LOCATION	REF LINE	ELEV (DCD)
NORTH HEADWALL	'A'	157.49
	'1'	157.84
	'B'	157.72
SOUTH HEADWALL	'A'	157.49
	'1'	157.84
	'B'	157.72

NOTES:

JWP DENOTES JOINT WATERPROOFING

FOR DETAILS OF NAME PLATES, MOLDINGS AND BEVELS, SEE STD PLAN B-103 SERIES.

FOR NAME PLATE LOCATION, SEE GENERAL PLAN OF STRUCTURE SHEET.

A RUBBED SURFACE FINISH ON THE VERTICAL OUTSIDE SURFACE OF THE PRECAST CONC HEADWALLS IS REQUIRED ON THIS STRUCTURE.

COORDINATE LOCATION OF 1 1/2" DIA. PVC CONDUIT @ HEADWALLS WITH RAILING DETAILS ON SHEETS 25 & 26.

PRECAST CONCRETE HEADWALL IS INCLUDED IN THE PAY ITEM, "CULV, PRECAST THREE-SIDED OR ARCH, MODIFIED, 32 FOOT BY 11 FOOT". ESTIMATED TOTAL LENGTH = 137 FT.

ALL PRECAST ELEMENTS SHALL HAVE 28 DAY COMPRESSIVE STRENGTH f'c = 5,000 PSI MIN

REACTION NOTES:

REACTIONS SHOWN ARE UNFACTORED LOADS.

LIVE LOAD REACTIONS SHOWN ARE MAXIMUM REACTION BASED ON VARYING AXLE LOAD POSITIONS.

IMPACT IS NOT INCLUDED.

DEAD LOAD REACTIONS INCLUDE PRECAST UNIT AND WEIGHT OF SOIL AT A UNIT WEIGHT OF 120 PCF.

PRIOR TO START OF CONSTRUCTION, CONTRACTOR SHALL PROVIDE ENGINEER WITH REACTIONS FROM PRECAST MANUFACTURER FOR PROJECT. THE REACTIONS SHALL BE REVIEWED BY THE ENGINEER PRIOR TO PRECAST FABRICATION.

MISCELLANEOUS QUANTITIES		
130	FT	CULV, PRECAST THREE-SIDED OR ARCH, MODIFIED 32 FOOT BY 11 FOOT
615	SFT	WINGWALL, PRECAST
1350	SFT	JOINT WATERPROOFING
1045	SYD	CONC SURFACE COATING

REV#	DATE	DESCRIPTION	BY

NOT VALID FOR CONSTRUCTION UNLESS SIGNED AND DATED

WADETRIM
Building relationships on a foundation of excellence
500 Griswold, Suite 2500
Detroit, MI 48226
PH: 313.961.1450
FAX: 313.961.0898
www.wadetrim.com

CITY OF DETROIT
DEPARTMENT OF PUBLIC WORKS
CITY ENGINEERING DIVISION
WILKINS ST. OVER DEQUINDRE CUT S.N. 12493
PRECAST CONCRETE PLAN & DETAILS

ISSUED FOR: DATE: BY:

JOB NO. DTE 2025-08T

SHEET 24 (397)

WILKINS STREET BRIDGE

© Wade Trim Group, Inc.

PROJECT MANAGER: - FIELD BOOK INFORMATION: -
C:\Sync_work\cametona\d0350142\CRP-PL\S-Precast1Tpo.dgn
PLOTTED 5/21/2013 10:47:54 AM BY Cametona

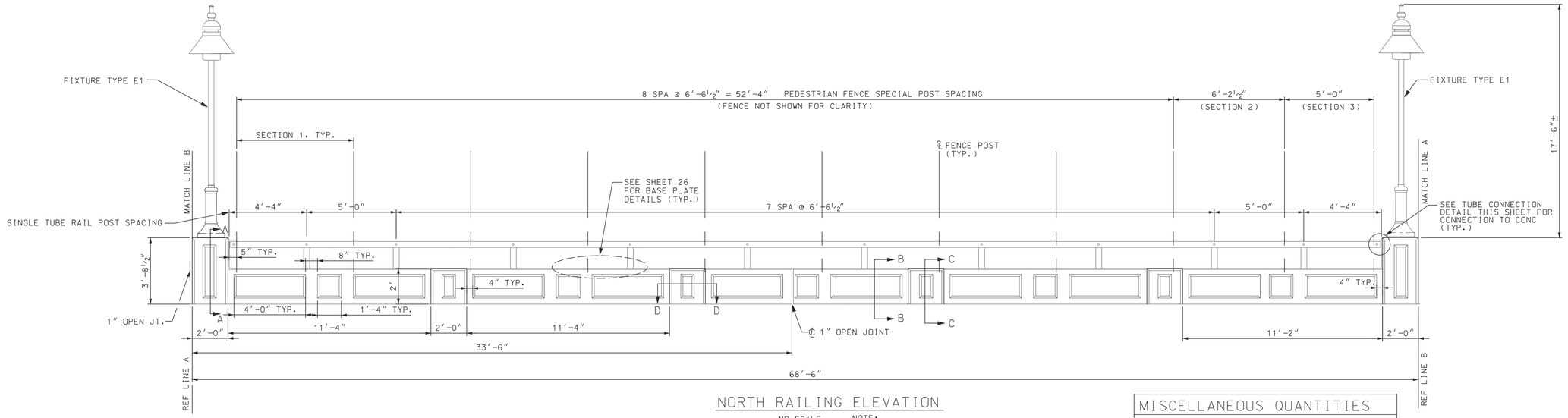

NORTH RAILING ELEVATION

NO SCALE

NOTE:
VIEW FROM CENTERLINE OF ROAD LOOKING AT INSIDE FACE OF RAILING.

TEXTURED CONC CURFACE TYP BOTH SIDES OF RAILING.

MISCELLANEOUS QUANTITIES

137	FT	BRIDGE RAILING, AESTHETIC PARAPET TUBE, DETAIL 2, MODIFIED
605	FT	AESTHETIC CONCRETE RAILING, SPECIAL
2945	SFT	PEDESTRIAN FENCE, SPECIAL
560	SYD	TEXTURING CONC

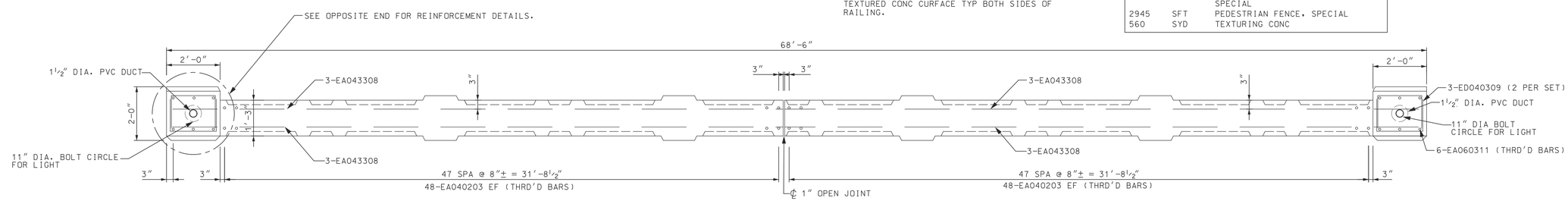

NORTH RAILING PLAN

NO SCALE

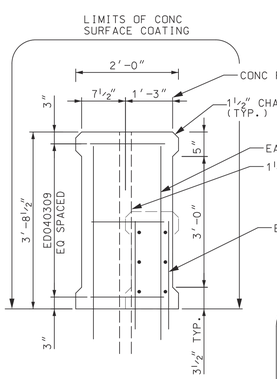

SECTION A-A

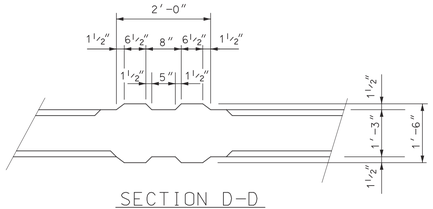

SECTION D-D

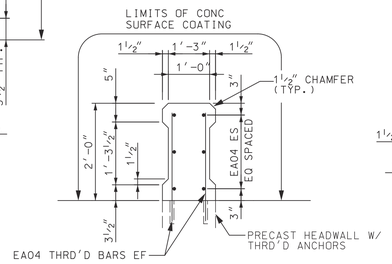

SECTION B-B

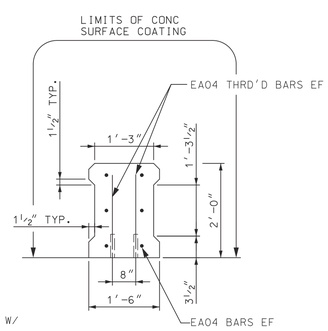

SECTION C-C

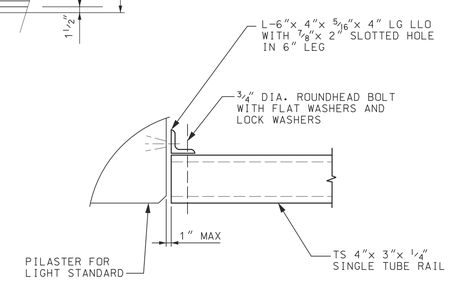

TUBE CONNECION DETAIL

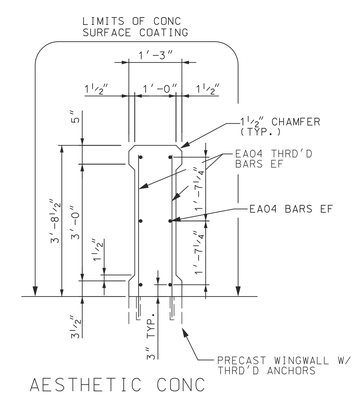

AESTHETIC CONC RAILING, SPECIAL - DETAIL

WORK THIS SHEET WITH SHEETS 26-28

REV #	DATE	DESCRIPTION	BY

NOT VALID FOR CONSTRUCTION UNLESS SIGNED AND DATED

WADETRIM
500 Griswold, Suite 2500
Detroit, MI 48226
313.961.1860
FAX: 313.961.0888
www.wadetrim.com

Building relationships on a foundation of excellence.

CITY OF DETROIT
DEPARTMENT OF PUBLIC WORKS
CITY ENGINEERING DIVISION
WILKINS ST. OVER DEQUINDRE CUT S.N. 12493
SUPERSTRUCTURE DETAILS

ISSUED FOR: DATE: BY:

JOB NO. DTE 2025-08T

SHEET 25 (398)

WILKINS STREET BRIDGE

© Wade Trim Group, Inc.

PLOTTED 5/21/2013 10:51:40 AM BY Cemetono

FIELD BOOK INFORMATION: --
PROJECT MANAGER: --
c:\pw_work\cemetono\d0350142\CBP-FLTS-Railingplate05Sheet.dgn

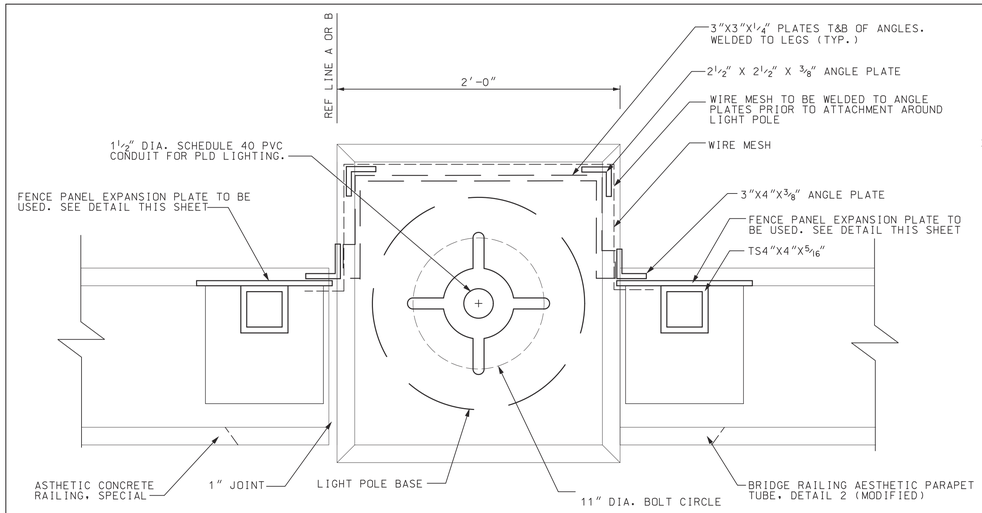

PEDESTRIAN FENCE, SPECIAL @ LIGHT POLE

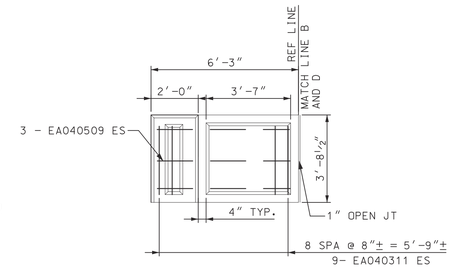

ELEVATION NW/SW QUADRANT

TEXTURED CONC SURFACE TYP
STREET SIDE ONLY

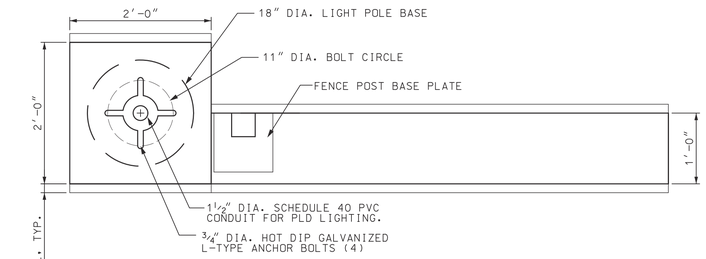

LIGHT POLE CONNECTION DETAIL

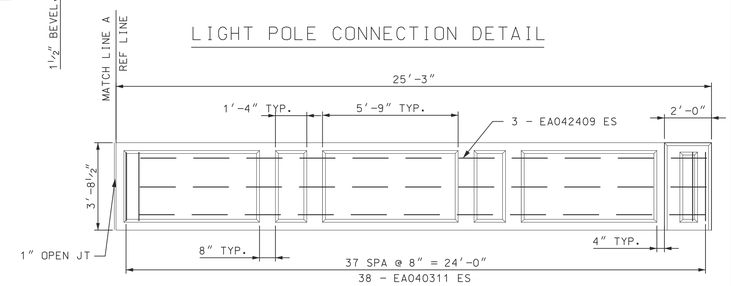

ELEVATION NE/SE QUADRANTS

TEXTURED CONC SURFACE BOTH SIDES @ NE QUAD
TEXTURED CONC SURFACE NEAR SIDE @ SE QUAD

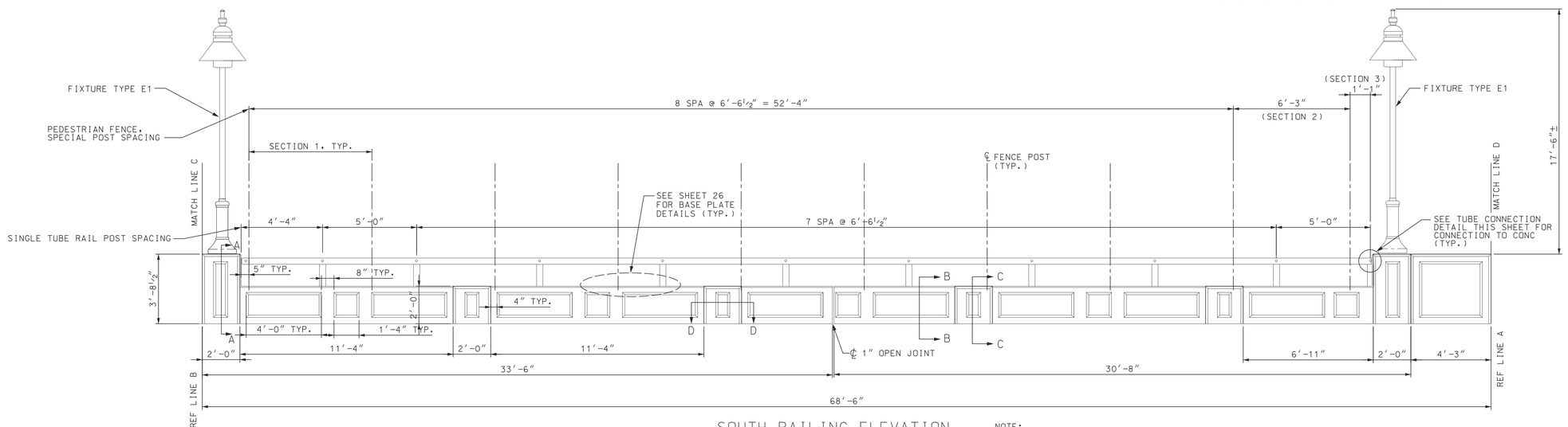

SOUTH RAILING ELEVATION

NO SCALE

NOTE:
VIEW FROM CENTERLINE OF ROAD LOOKING AT INNER FACE OF RAILING.

TEXTURED CONC SURFACE TYP BOTH SIDES OF RAILING.

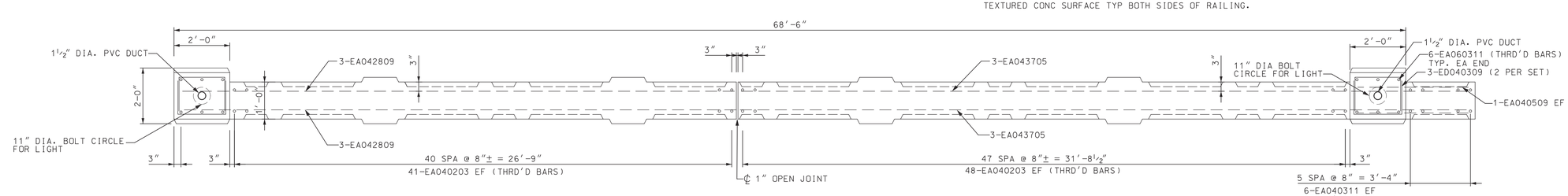

SOUTH RAILING PLAN

NO SCALE

WORK THIS SHEET WITH SHEETS 25 & 27

REV#	DATE	DESCRIPTION	BY

NOT VALID FOR CONSTRUCTION UNLESS SIGNED AND DATED

WADETRIM
500 Griswold, Suite 2500
Detroit, MI 48226
313.961.1450
FAX: 313.961.0888
www.wadetrim.com

Building relationships on a foundation of excellence.

CITY OF DETROIT
DEPARTMENT OF PUBLIC WORKS
CITY ENGINEERING DIVISION
WILKINS ST. OVER DEQUINDRE CUT S.N. 12493
PEDESTRIAN FENCE DETAILS

ISSUED FOR: DATE: BY:

JOB NO. DTE 2025-08T

SHEET 26 (399)

WILKINS STREET BRIDGE

© Wade Trim Group, Inc.

PROJECT MANAGER: –
FIELD BOOK INFORMATION: –
C:\pw_work\cgomezjrm\d0350142\CSP-FL1S-Pedestrian-Fence-Details.dgn
PLOTTED 5/21/2013 10:52:56 AM BY Cgomezjrm

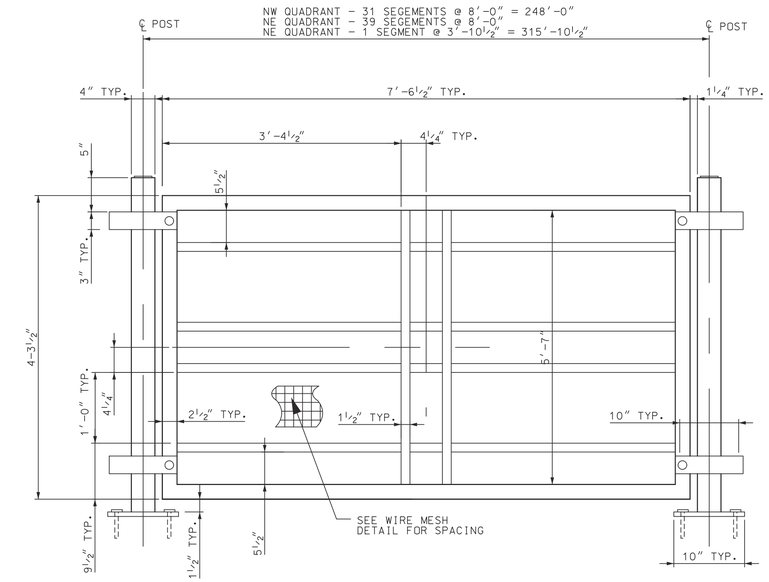

TYPICAL FENCE SECTION ON RETAINING WALL

ALL SECTIONS & POSTS TO BE PAINTED BLACK

FENCE POST SPACING ON BRIDGE			
	LENGTH		
SECTION	A	B	C
1	6'-6 1/2"	6'-0"	2'-7 3/4"
2	6'-2 1/2"	5'-8"	2'-5 3/4"
3	5'-0"	4'-5 1/2"	1'-10 1/2"

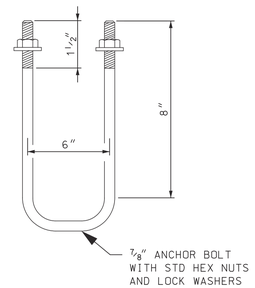

FENCE POST ANCHOR BOLT DETAIL

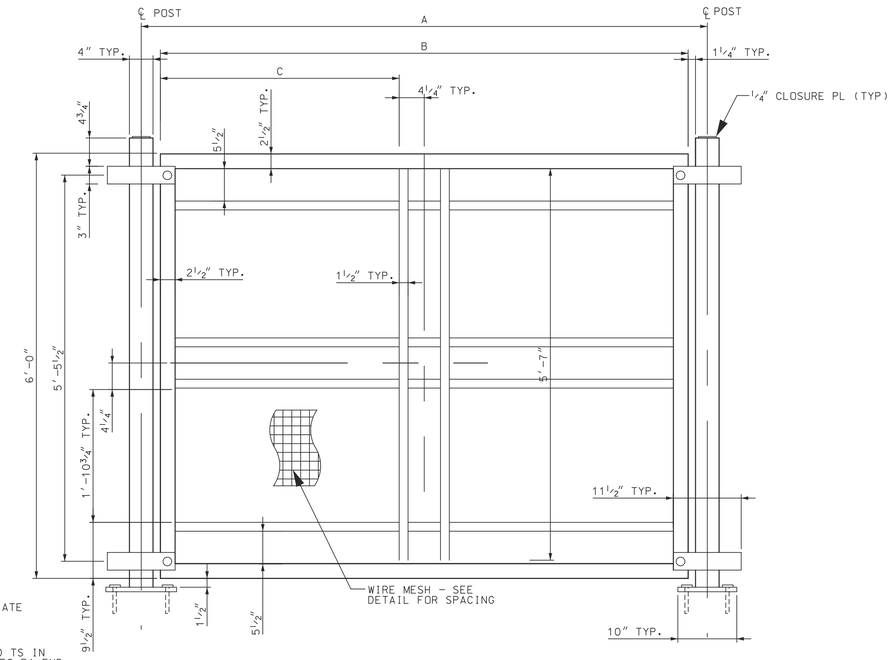

TYPICAL FENCE PANEL SECTION ON BRIDGE

ALL SECTIONS & POSTS TO BE PAINTED BLACK

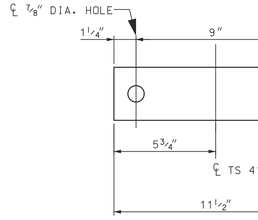

FENCE PANEL CONNECTION PLATE DETAIL

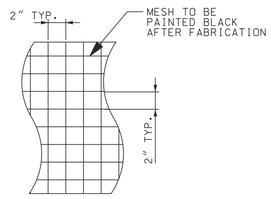

WIRE MESH DETAIL

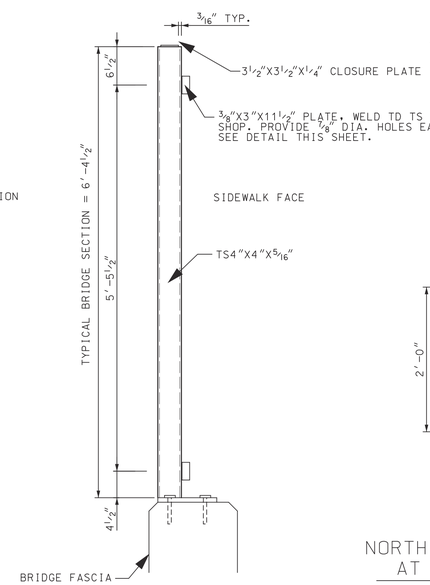

FENCE POST DETAIL

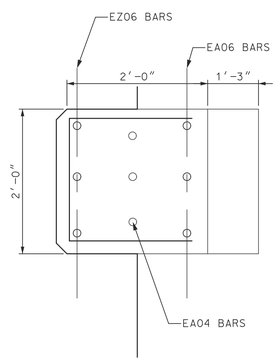

NORTH RETAINING WALL SECTION AT LIGHT POLE PLAN VIEW

NO SCALE

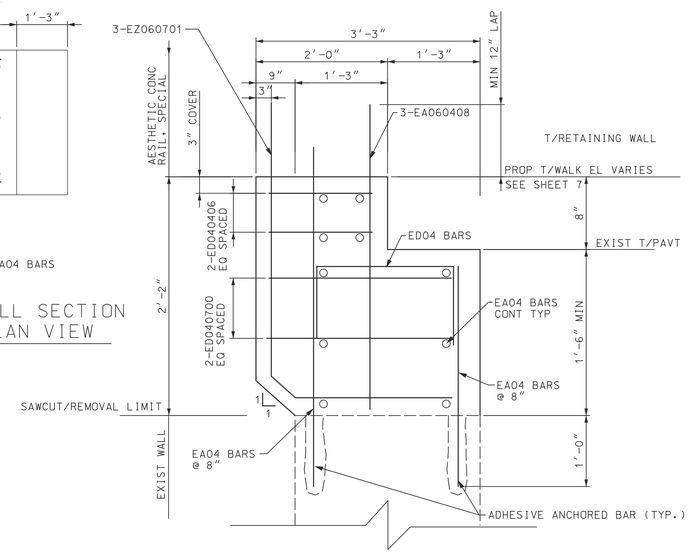

NORTH RETAINING WALL SECTION AT LIGHT POLE

NO SCALE

FOR DETAILS OF AESTHETIC CONC RAILING, SPECIAL AT LIGHT STANDARD LOCATION SEE DETAILS ON SHEETS 25 & 26.

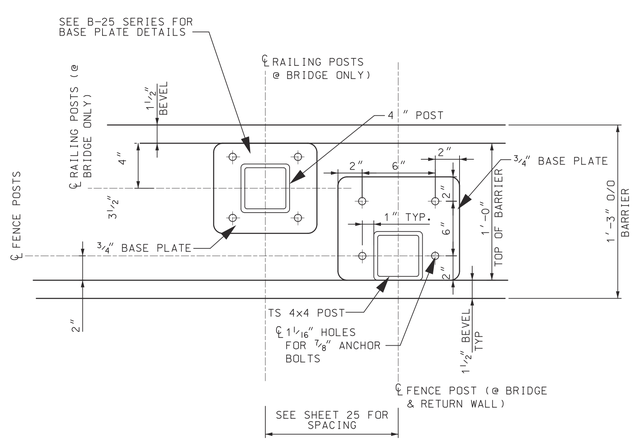

POST BASE PLATE DETAILS

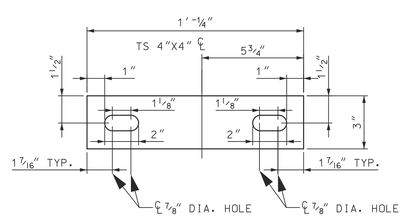

FENCE PANEL EXPANSION PLATE DETAIL

WORK THIS SHEET WITH SHEETS 25 & 26

REV #	DATE	DESCRIPTION	BY

Building relationships on a foundation of excellence.

NOT VALID FOR CONSTRUCTION UNLESS "SIGNED AND DATED"

WADE TRIM
500 Griswold, Suite 2500
Detroit, MI 48226
313.961.3650
FAX: 313.961.8898
www.wadetrim.com

CITY OF DETROIT
DEPARTMENT OF PUBLIC WORKS
CITY ENGINEERING DIVISION
WILKINS ST. OVER DEQUINDRE CUT S.N. 12493
PEDESTRIAN FENCE DETAILS

ISSUED FOR: DATE: BY:

JOB NO. DTE 2025-08T

SHEET 27 (400)

WILKINS STREET BRIDGE

© Wade Trim Group, Inc.

PROJECT MANAGER: -
FIELD BOOK INFORMATION: -
c:\pw_work\cometana\d0350142\CSP-PL-S-Pedestrian-Fence-Details 2.dgn
PLOTTED 5/21/2013 10:54:22 AM BY Cometana

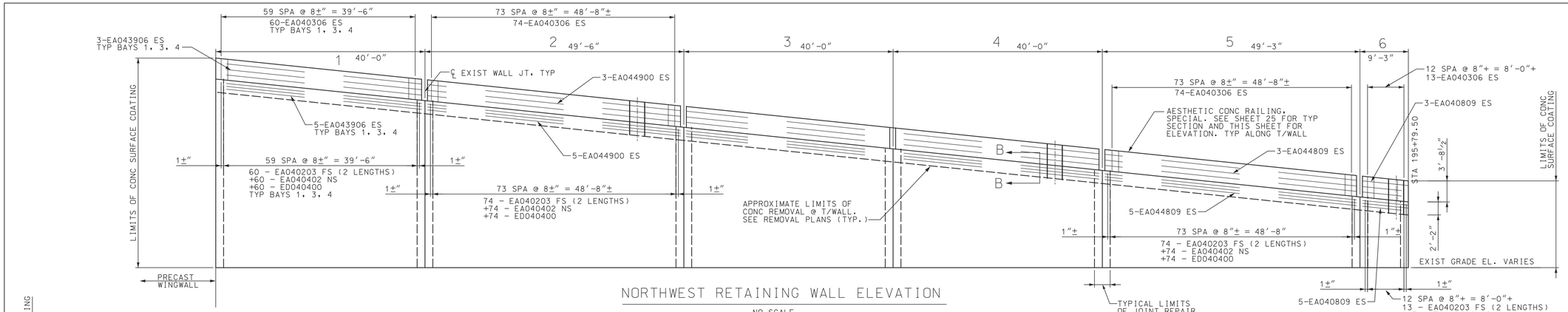

NORTHWEST RETAINING WALL ELEVATION

NO SCALE

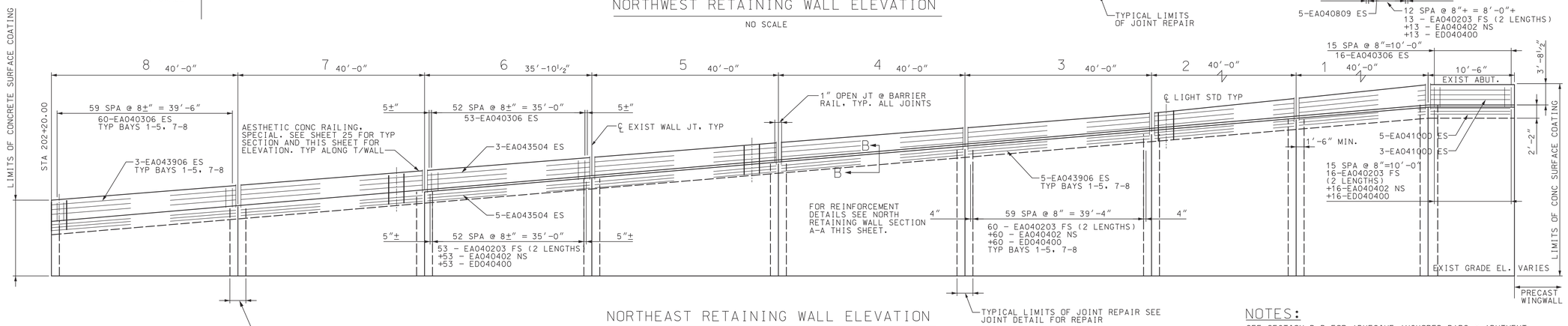

NORTHEAST RETAINING WALL ELEVATION

NO SCALE

NOTES:

SEE SECTION B-B FOR ADHESIVE ANCHORED BARS @ ABUTMENT

WALL DIMENSIONS TAKEN FROM EXIST DRAWINGS. CONTRACTOR TO FIELD VERIFY.

MISCELLANEOUS QUANTITIES

1725	CFT	HAND CHIPPING. OTHER THAN DECK
67	CYD	PATCHING CONC. TYPE M
95	CYD	CONCRETE. GRADE D
2896	EA	ADHESIVE ANCHORING OF VERICTAL BAR. ½ INCH
3425	SFT	PATCH FORMING

SEE SHEET 25 FOR RAILING AND FENCE QUANTITES

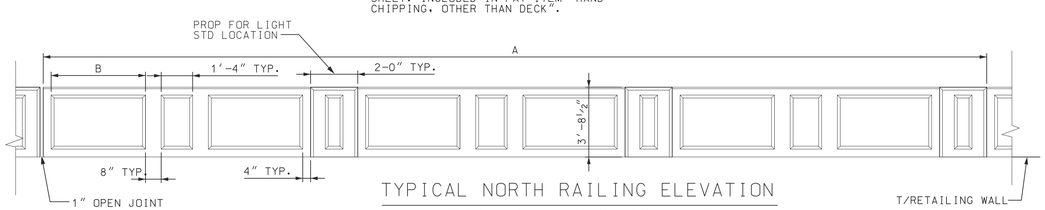

TYPICAL NORTH RAILING ELEVATION

TEXTURED CONC SURFACE TYP BOTH SIDES OF RAILING.
CONC SURFACE BOTH SIDES & TOP OF RAILING.

CONTRACTOR TO LAYOUT TEXTURED CONC SURFACE TO BE ALIGNED WITH LIGHT STD LOCATION.

RAILING DIMENSIONS

NW RET. WALL	DIMENSION	
WALL SECTION	A	B
1	40'-0"	4'-0"
2	49'-6"	3'-6¾"
3	40'-0"	4'-0"
4	40'-0"	4'-0"
5	49'-3"	3'-6"
6	9'-3"	2'-10⅛"

RAILING DIMENSIONS

NE RET. WALL	DIMENSION	
WALL SECTION	A	B
1	40'-0"	4'-0"
2	40'-0"	4'-0"
3	40'-0"	4'-0"
4	40'-0"	4'-0"
5	40'-0"	4'-0"
6	35'-10⅜"	3'-4"
7	40'-0"	4'-0"
8	40'-0"	4'-0"

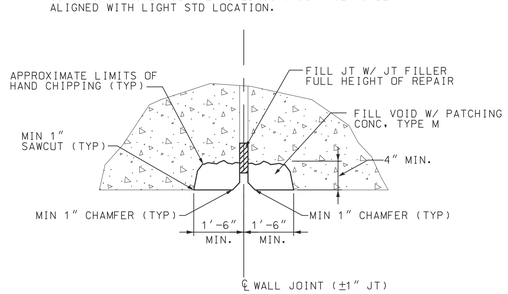

JOINT DETAIL

NO SCALE

CUT AS REQ'D FOR
JOINT PLACEMENT

SW QUAD WALL

3 - EA043306 EF (1 LENGTH)
3 - EA043906 EF (4 LENGTHS)
3 - EA044900 EF (1 LENGTH)

SE QUAD WALL

3 - EA042500 EF (1 LENGTH)
3 - EA043906 EF (3 LENGTHS)
3 - EA041806 EF (1 LENGTH)

SAWCUT/REMOVAL LIMIT

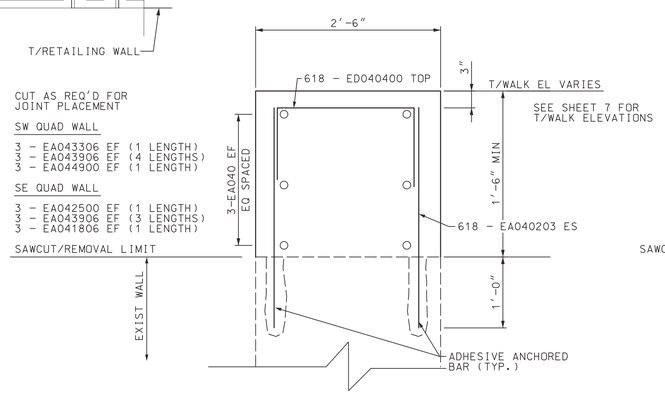

SOUTH RETAINING WALL SECTION A-A

NO SCALE

SEE SHEET 8 FOR EXTENT OF CAP REPLACEMENT

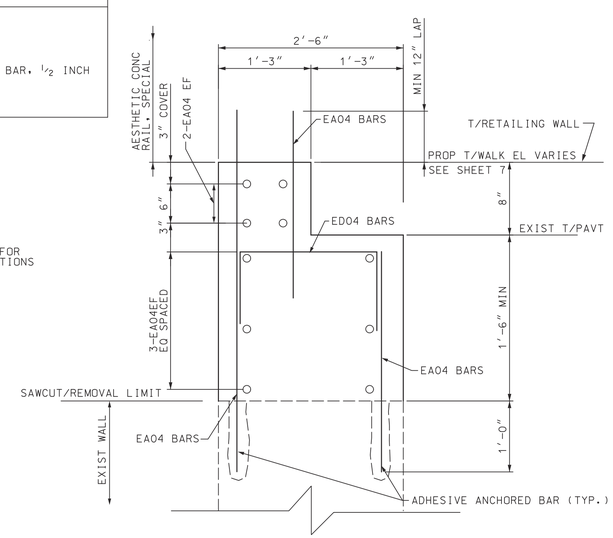

NORTH RETAINING WALL SECTION B-B

NO SCALE

REV#	DATE	DESCRIPTION	BY

NOT VALID FOR CONSTRUCTION UNLESS "SIGNED AND DATED"

WADETRIM
500 Griswold, Suite 2500
Detroit, MI 48226
313.961.3650
FAX 313.961.0898
www.wadetrim.com

Building relationships on a foundation of excellence

CITY OF DETROIT
DEPARTMENT OF PUBLIC WORKS
CITY ENGINEERING DIVISION

WILKINS ST. OVER DEQUINDRE CUT S.N. 12493

RETAINING WALL REHAD PLAN & DETAILS

ISSUED FOR: DATE: BY:

JOB NO. DTE 2025-08T

SHEET 28 (401)

WILKINS STREET BRIDGE

© Wade Trim Group, Inc.

PROJECT MANAGER: - FIELD BOOK INFORMATION: -
G:\Sys_work\cometona\d0350142\SHP-RLS Redesign\dgn\Repair Sheet.dgn
PLOTTED 5/21/2013 10:57:22 AM BY Cometona

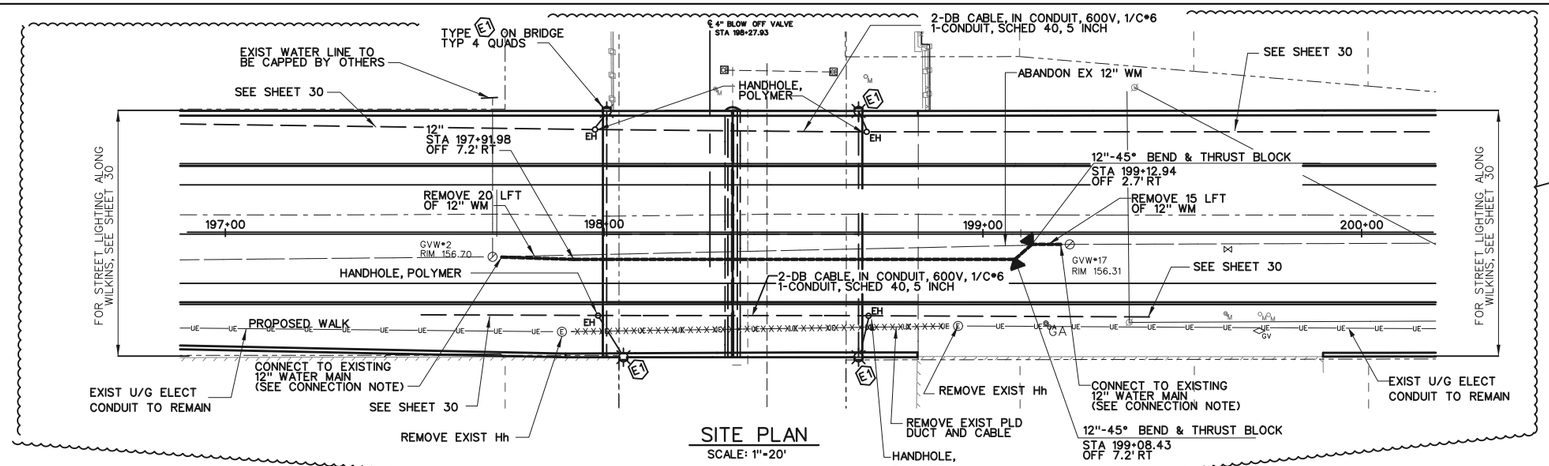

SITE PLAN

SCALE: 1"=20'

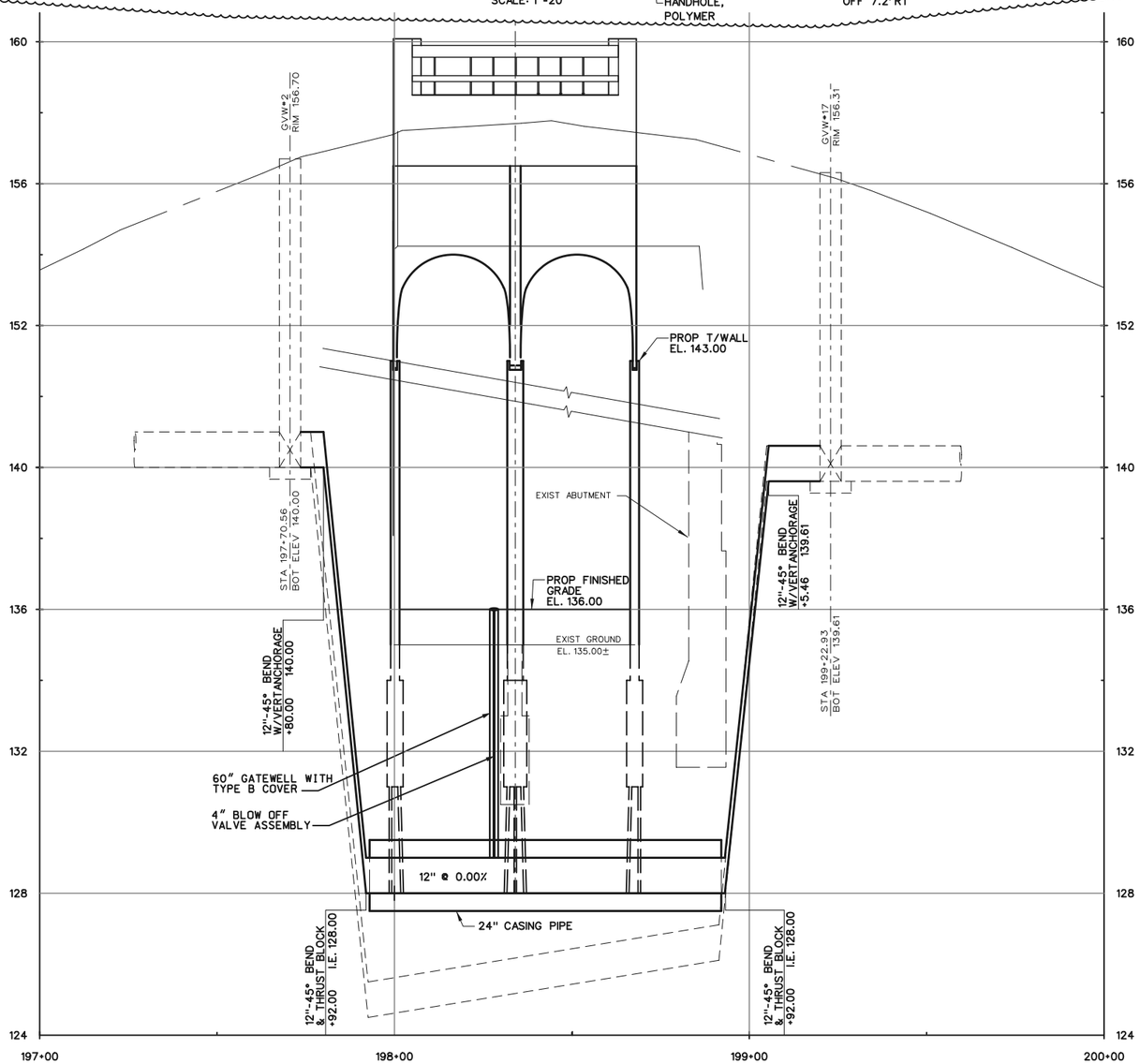

PROFILE

SCALE: VERT 1"=2'
HORZ 1'=20'

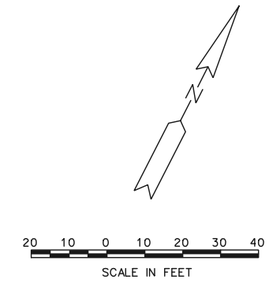

WATER MAIN QUANTITIES

155	FT	WATER MAIN, DI, 12 INCH, TR DET G
4	CYD	FLOWABLE FILL, NON-STRUCTURAL
35	FT	WATER MAIN, REM
1	EA	GATE VALVE & BOX, 4 INCH
100	FT	STEEL CASING PIPE, 24 INCH, TR DET G
1	EA	GATE WELL, 60 INCH DIA
1	EA	DR STRUCTURE COVER, TYPE B

ELECTRICAL QUANTITIES

105	FT	CABLE, REM
150	FT	CONDUIT, SCHEDULE 40, 5 INCH
2	EA	Hh, REM
4	EA	Hh, POLYMER
4	EA	FIXTURE TYPE E1
280	FT	DB CABLE IN CONDUIT, 600V, 1/C*6
60	FT	CONDUIT, SCHEDULE 40, 1½ INCH
60	FT	DB CABLE IN CONDUIT, 1/C*8

ELECTRICAL NOTES:

SEE SHEET 31 (404) FOR HANDHOLE DETAILS.

THE PVC CONDUIT SHALL BE PLACED IN THE FILL AREA BETWEEN TOP OF ARCHES AND ROADWAY SUBBASE. COORDINATE WITH PRECAST DWGS AS TO LOCATION OF DUCT CONNECTION AT PRECAST HEADWALL.

REMOVAL OF EXIST PLD CONDUIT IS INCLUDED IN THE PAY ITEM "STRUCTURE, REM PORTIONS, MODIFIED."

FOR DETAILS OF FIXTURE TYPE SEE PROJECT PLANS 403 (WILKINS SHEET 30) FOR DETAILS AND SCHEDULE.

ELECT QUANTITIES THIS SHEET ARE FROM WEST Hh TO EAST Hh AND CONDUIT ON BRIDGE. SEE SHEET 30 (403) FOR ELECT ALONG WILKINS EAST AND WEST OF BRIDGE

CONDUIT, SCHEDULE 40, 1½ INCH W/ DB CABLE IN CONDUIT, 600V, 1/C*8 SHALL BE USED BETWEEN Hh AND LIGHT POLE BASE AT BRIDGE CORNERS.

DWSD NOTES:

SEE SPECIAL PROVISIONS FOR WORKING AROUND DWSD FACILITIES.

SEE SHEET 32 FOR DWSD STANDARD DETAILS.

FOR DETAILS OF GATEWELL WITH BLOW OFF VALVE, SEE DWSD STANDARD DETAILS.

CONNECT NEW 12" D.I. WATER MAIN TO EXISTING WATER MAIN AFTER HYDROSTATIC AND BACTERIAL TEST HAVE BEEN SUCCESSFULLY COMPLETED AND REVIEWED BY THE ENGINEER. INCLUDE IN PAY ITEM "WATER MAIN, DI, 12 INCH, TR DET G".

IF TIMBER PILES ARE ENCOUNTERED CONTRACTOR TO CUT DOWN TO 6'-0" BELOW PIPE INVERT. THIS WORK SHALL BE INCLUDED IN PAY ITEM "WATER MAIN, REM".

CONTRACTOR SHALL COORDINATE INSTALLATION OF WATER MAIN WITH FIBER OPTIC LINES. SEE SPECIAL PROVISIONS.

WORK THIS SHEET WITH SHEET 30

REV#	DATE	DESCRIPTION	BY
1	10/28/13	FOUNDATION REVISION	RRB
2	08/27/14	ELECTRICAL LIGHTING REVISIONS	RRB

NOT VALID FOR CONSTRUCTION UNLESS SIGNED AND DATED:

WADE TRIM
500 Griswold, Suite 2500
Detroit, MI 48226
313.961.8960
FAX: 313.961.0898
www.wadetrim.com

Building relationships on a foundation of excellence

CITY OF DETROIT
DEPARTMENT OF PUBLIC WORKS
CITY ENGINEERING DIVISION
WILKINS ST. OVER DEQUINDRE CUT S.N. 12493
PLD/DWSD PLAN AND DETAILS

ISSUED FOR: DATE: BY:

JOB NO. DTE 2025-08T

SHEET 29 (402)

WILKINS STREET BRIDGE

© Wade Trim Group, Inc.

PROJECT MANAGER: -
FIELD BOOK INFORMATION: -
c:\pw_work\rbreen\d0553727\CEP-PLTS-Plan of Site REV.dgn
PLOTTED 8/29/2014 1:24:10 PM BY rbreen

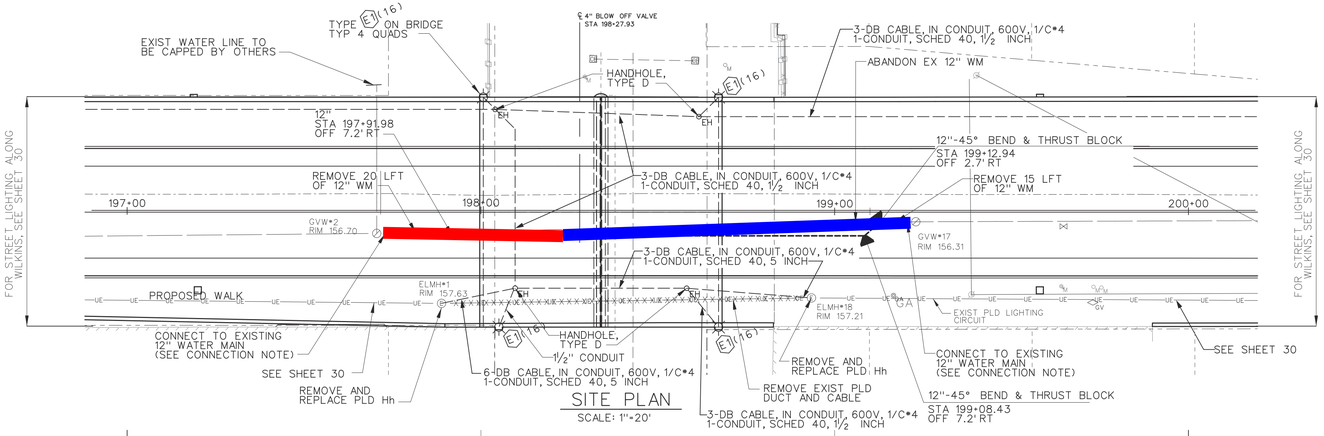

SITE PLAN
SCALE: 1"=20'

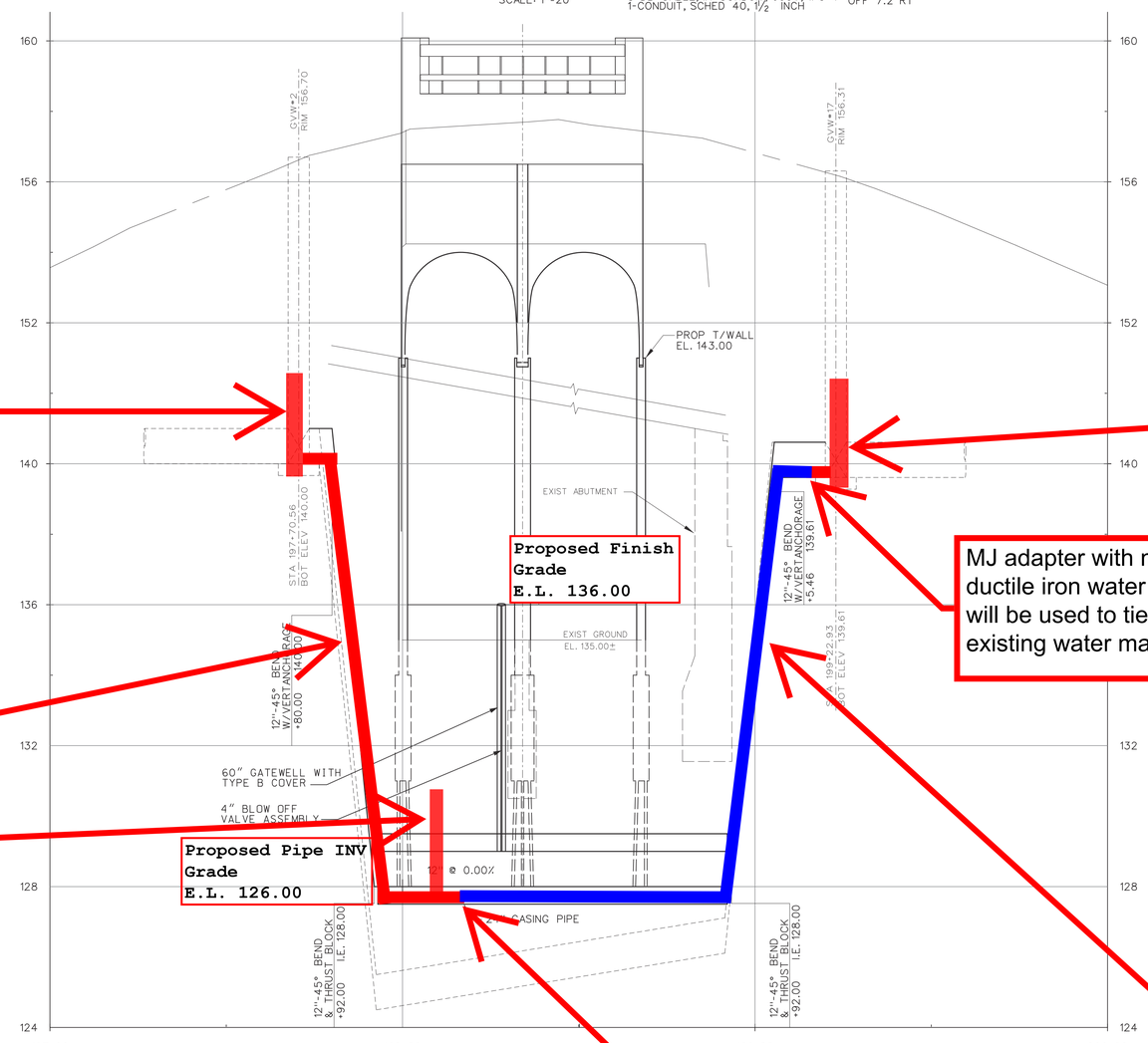

PROFILE
SCALE: VERT 1"=2' HORZ 1'=20'

new gate valve placed by DWSD. Will connect new water main to new water main placed during an earlier contract.

Place 55 lft of new ductile iron water main

Place 4 inch blow off

Transition to be placed between footing allowing access from the bike path.

New gate valve and well placed at an earlier date by this contract. Will connect new water main to new water main placed by an earlier contract

MJ adapter with new ductile iron water main will be used to tie into existing water main.

Approximately 100 lft of SDR11 HDPE water main placed by direction bore, paid as extra work, new items. Work by USA, LLC and supported by AICC.

20 10 0 10 20 30 40
SCALE IN FEET

WATER MAIN QUANTITIES

155	FT	WATER MAIN, DI, 12 INCH, TR DET G
4	CYD	FLOWABLE FILL, NON-STRUCTURAL
35	FT	WATER MAIN, REM
1	EA	GATE VALVE & BOX, 4 INCH
100	FT	STEEL CASING PIPE, 24 INCH, TR DET G
1	EA	GATE WELL, 60 INCH DIA
1	EA	DR STRUCTURE COVER, TYPE B

PLD QUANTITIES

105	FT	CABLE, REM
110	FT	CONDUIT, SCHEDULE 40, 5 INCH
2	EA	Hh, REM
6	EA	Hh, TYPE D
4	EA	FIXTURE TYPE E1
940	FT	DB CABLE IN CONDUIT, 600V, 1/C*4
175	FT	CONDUIT, SCHEDULE 40, 1½ INCH

DWSD NOTES:

SEE SPECIAL PROVISIONS FOR WORKING AROUND DWSD FACILITIES.

SEE SHEET 32 FOR DWSD STANDARD DETAILS.

FOR DETAILS OF GATEWELL WITH BLOW OFF VALVE, SEE DWSD STANDARD DETAILS.

CONNECT NEW 12" D.I. WATER MAIN TO EXISTING WATER MAIN AFTER HYDROSTATIC AND BACTERIAL TEST HAVE BEEN SUCCESSFULLY COMPLETED AND REVIEWED BY THE ENGINEER. INCLUDE IN PAY ITEM "WATER MAIN, DI, 12 INCH, TR DET G".

IF TIMBER PILES ARE ENCOUNTERED CONTRACTOR TO CUT DOWN TO 6'-0" BELOW PIPE INVERT. THIS WORK SHALL BE INCLUDED IN PAY ITEM "WATER MAIN, REM".

CONTRACTOR SHALL COORDINATE INSTALLATION OF WATER MAIN WITH FIBER OPTIC LINES. SEE SPECIAL PROVISIONS.

REV #	DATE	DESCRIPTION	BY

NOT VALID FOR CONSTRUCTION UNLESS SIGNED AND DATED

WADETRIM
500 Griswold, Suite 2500
Detroit, MI 48226
313.961.1860
FAX: 313.961.0988
www.wadetrim.com

Building relationships on a foundation of excellence

CITY OF DETROIT
DEPARTMENT OF PUBLIC WORKS
CITY ENGINEERING DIVISION
WILKINS ST. OVER DEQUINDRE CUT S.N. 12493
PLD/DWSD PLAN AND DETAILS

ISSUED FOR: DATE: BY:

JOB NO. DTE 2025-08T

SHEET 29 (402)

WILKINS STREET BRIDGE

© Wade Trim Group, Inc.

PROJECT MANAGER: - FIELD BOOK INFORMATION: - G:\pw_work\cemetpw\d0350142\CEP-PL1S\Plan of Sitevign PLOTTED 5/21/2013 10:59:13 AM BY Cemetpw

MISCELLANEOUS QUANTITIES

715	FT	CONDUIT, SCHEDULE 40, 5 INCH
1	EA	Hh, TYPE D
14	EA	FIXTURE TYPE E2
2780	FT	DB CABLE IN CONDUIT, 600V, 1/C*4
3	EA	Hh, REM
14	EA	LIGHT STD FDN
225	FT	CONDUIT, SCHEDULE 40, 1½ INCH
13	EA	HANDHOLE, POLYMER
1	EA	WOOD POLE, REM
13	EA	HANDHOLE, POLYMER
450	FT	DB CABLE IN CONDUIT, 600V, 1/C*2
225	FT	DB CABLE IN CONDUIT, 600V, 1/C*8
2	CYD	CONC, GRADE S20
2	EA	LUMINAIRE, REM
2	EA	LIGHT STD ARM, REM
10	SYD	SIDEWALK, REM
85	SFT	SIDEWALK, CONC, 6 INCH

NOTE:

CONDUIT, SCHEDULE 40, 1½ INCH W/ DB CABLE IN CONDUIT, 600V, 1/C#8 SHALL BE USED BETWEEN Hh AND LIGHT POLE BASES. TYP ALL LOCATIONS.

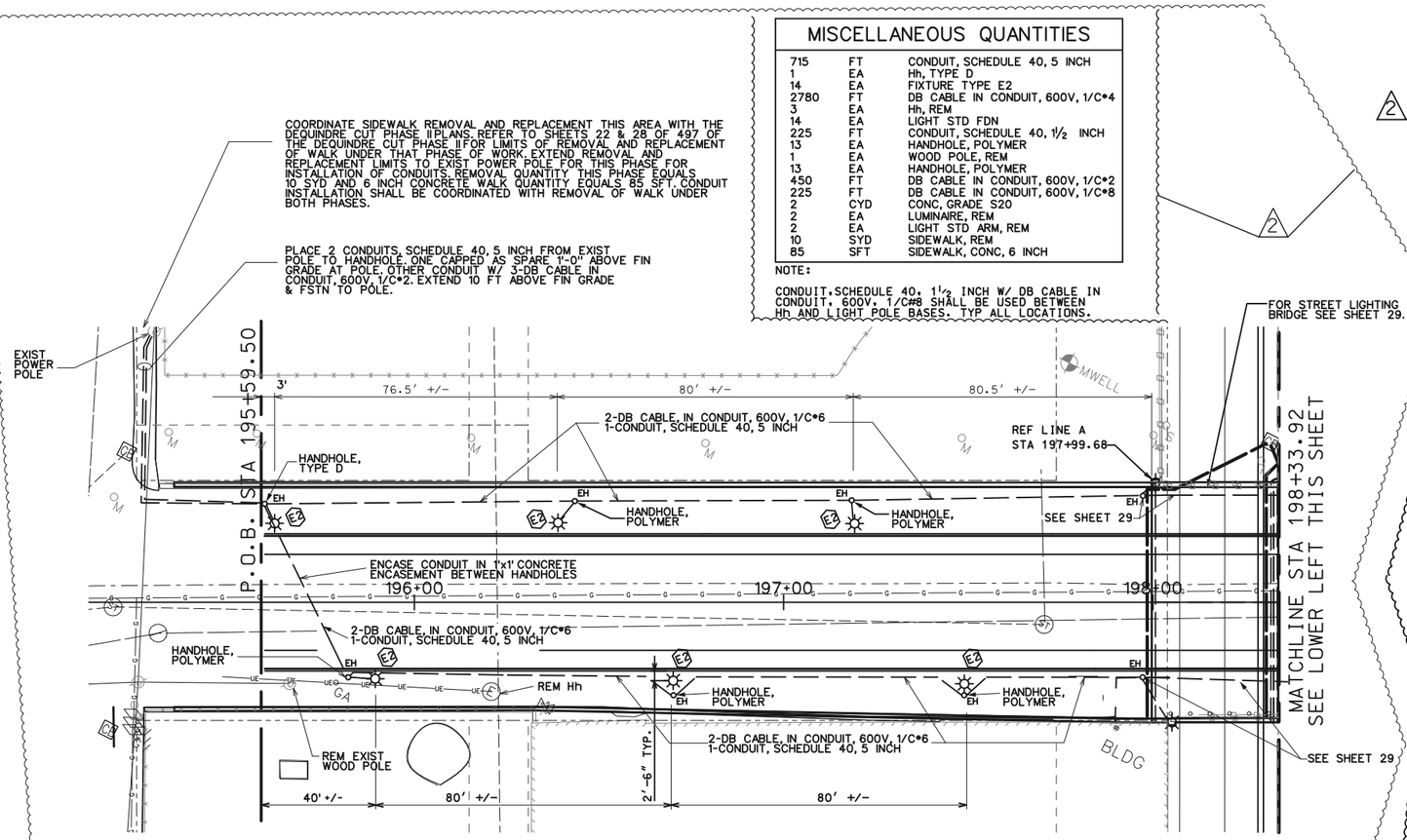

PARTIAL STREET LIGHTING PLAN

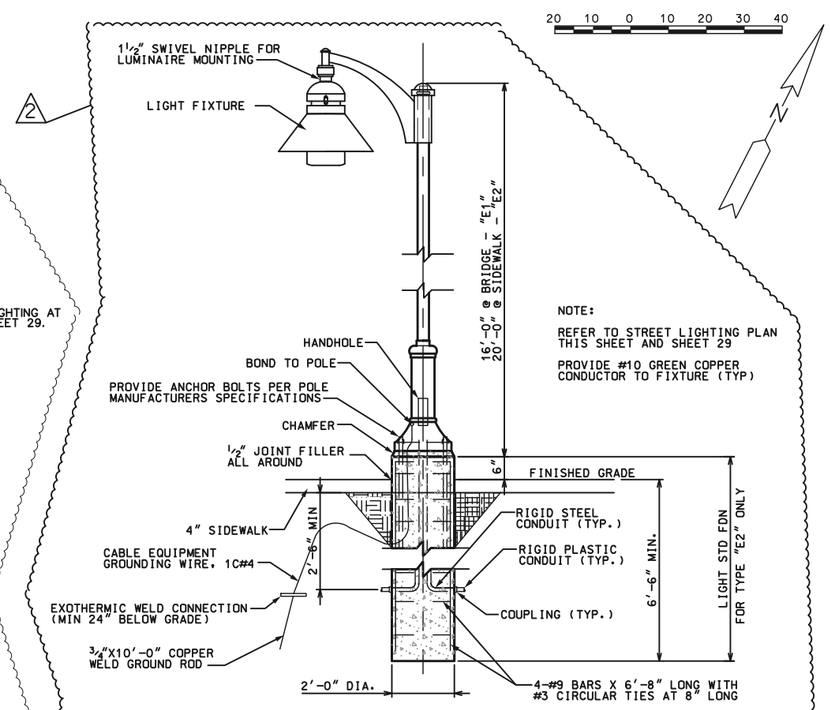

LIGHTING FIXTURE TYPE "E1" & "E2"

NO SCALE

LIGHTING FIXTURE SCHEDULE

TYPE	DESCRIPTION	MANUFACTURER	VOLTS	MOUNTING	LAMPS	REMARKS
E1	EURO STYLED CAST ALUMINUM POLE MID PEDESTRIAN LIGHT WITH LED FLAT GLASS OPTICAL ASSEMBLY; TYPE V SYMMETRIC FULL. CUT OFF; HALLBROOK EXTENDED COVER STYLE	HOLOPHANE	208	POLE ON BRIDGE BARRIER RAILING	105W LED 6000K 525 MA DRIVER	16 FT MTG HEIGHT
E2		HOLOPHANE	208	POLE ON LIGHT STD FOUNDATION	105W LED 6000K 525 MA DRIVER	20 FT MTG HEIGHT

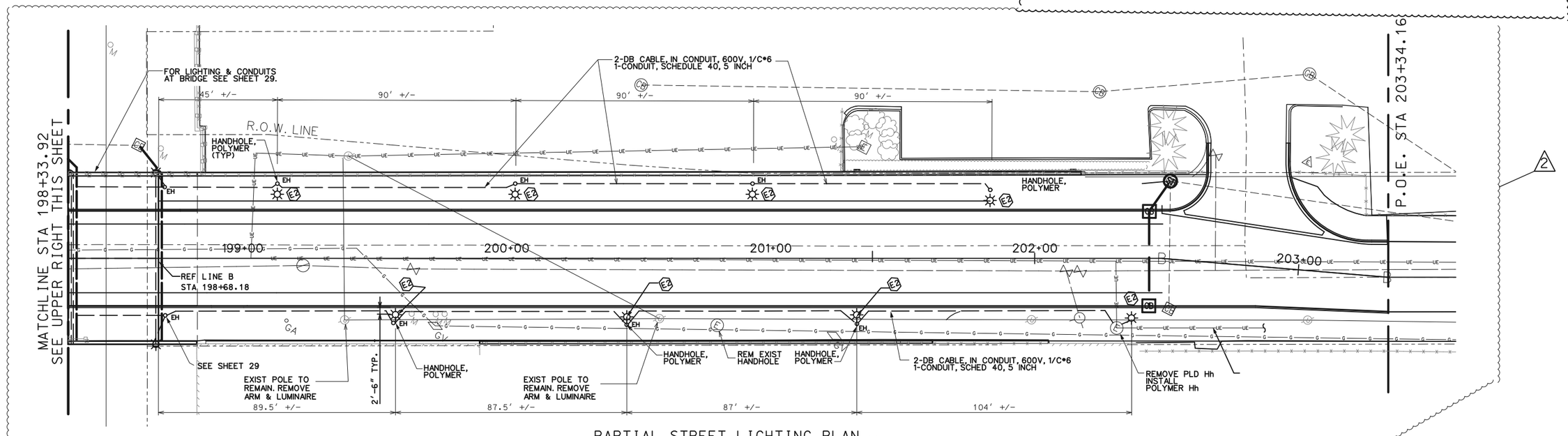

PARTIAL STREET LIGHTING PLAN

WORK THIS SHEET WITH SHEET 29

REV#	DATE	DESCRIPTION	BY
1	10/28/13	FOUNDATION REVISION	RRB
2	8/27/14	ELECTRICAL LIGHTING REVISIONS	RRB

NOT VALID FOR CONSTRUCTION UNLESS SIGNED AND DATED:

WADE TRIM
500 Griswold, Suite 2500
Detroit, MI 48226
PH: 313.961.3650
FAX: 313.961.8899
www.wadetrim.com

Building relationships on a foundation of excellence

CITY OF DETROIT
DEPARTMENT OF PUBLIC WORKS
CITY ENGINEERING DIVISION
WILKINS ST. OVER DEQUINDRE CUT S.N. 12493
STREET LIGHTING PLAN

ISSUED FOR: DATE: BY:

JOB NO. DTE 2025-08T

SHEET 30 (403)

WILKINS STREET BRIDGE

© Wade Trim Group, Inc.

PROJECT MANAGER: - FIELD BOOK INFORMATION: -
c:\pw_work\rbreen\d0553727\CEP-PLTS-PLDLightLayout REV.dgn
PLOTTED 9/2/2014 2:14:36 PM BY rbreen

PLD NOTES:

SEE SHEET 31 FOR PLD HANDHOLE DETAILS.

MISCELLANEOUS QUANTITIES

550	FT	CONDUIT, SCHEDULE 40, 5 INCH
15	EA	Hh, TYPE D
14	EA	FIXTURE TYPE E1
4170	FT	DB CABLE IN CONDUIT, 600V, 1/C•4
500	FT	CABLE, REM
3	EA	Hh, REM
7	EA	LIGHT STD FDN
660	FT	CONDUIT, SCHEDULE 40, 1½ INCH

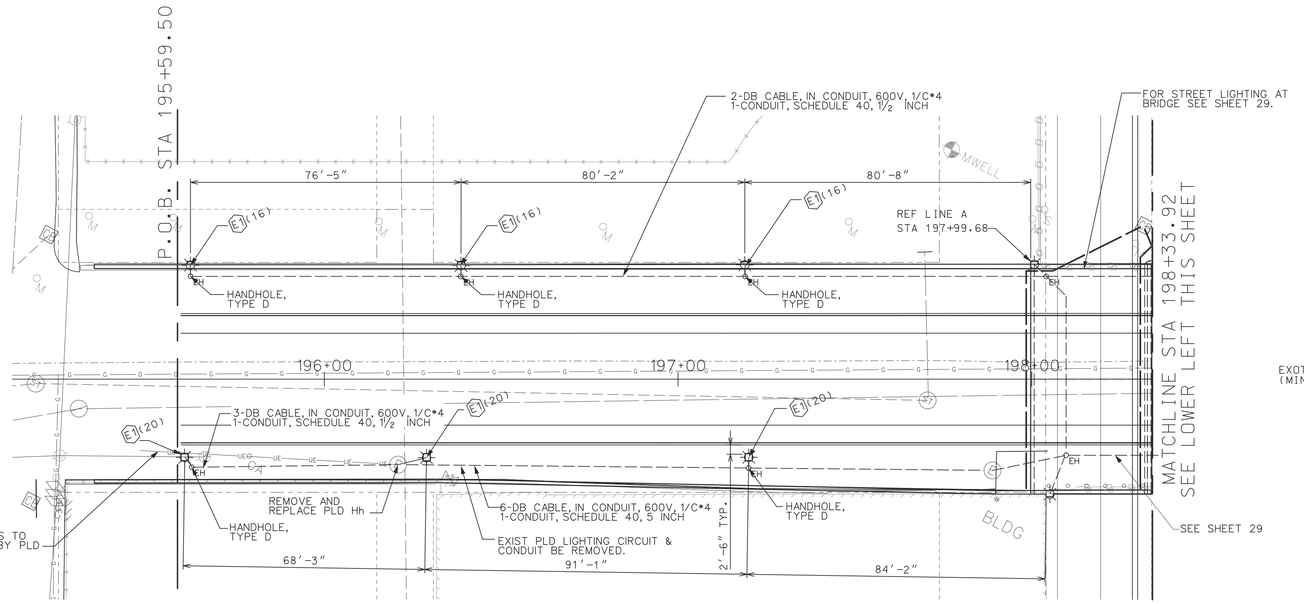

PARTIAL STREET LIGHTING PLAN

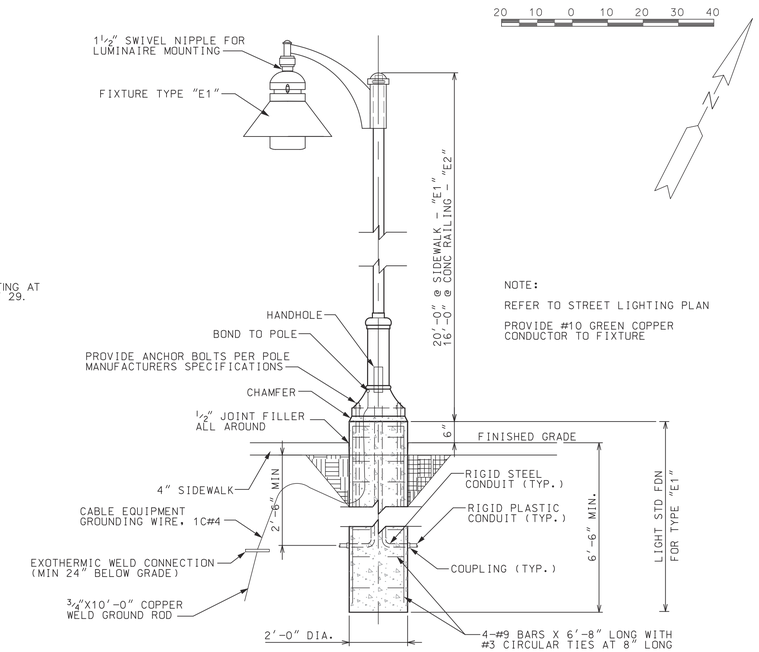

NOTE:

REFER TO STREET LIGHTING PLAN

PROVIDE #10 GREEN COPPER CONDUCTOR TO FIXTURE

LIGHTING FIXTURE TYPE "E1"

NO SCALE

LIGHTING FIXTURE SCHEDULE

TYPE	DESCRIPTION	MANUFACTURER	VOLTS	MOUNTING	LAMPS	REMARKS
E1(20)	EURO STYLED CAST ALUMINUM POLE MID PEDESTRIAN LIGHT WITH LED FLAT GLASS OPTICAL ASSEMBLY; TYPE V SYMMETRIC FULL. CUT OFF; HALLBROOK EXTENDED COVER STYLE	HOLOPHANE	240	POLE ON LIGHT STD FOUNDATION	105W LED 6000K 525 MA DRIVER	20 FT MTG HEIGHT
E1(16)		HOLOPHANE	240	POLE ON CONC BARRIER RAILING	105W LED 6000K 525 MA DRIVER	16 FT MTG HEIGHT

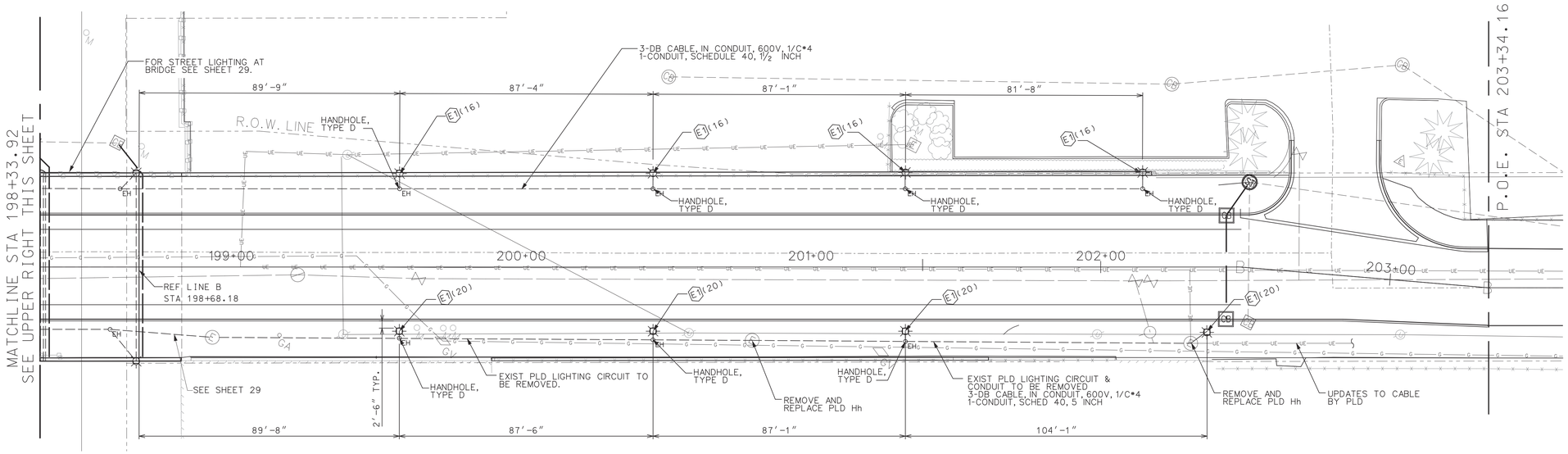

PARTIAL STREET LIGHTING PLAN

REV#	DATE	DESCRIPTION	BY

NOT VALID FOR CONSTRUCTION UNLESS SIGNED AND DATED

WADETRIM

500 Griswold, Suite 2500
Detroit, MI 48226
T 313.961.1830
FAX 313.961.0898
www.wadetrim.com

Building relationships on a foundation of excellence.

CITY OF DETROIT
DEPARTMENT OF PUBLIC WORKS
CITY ENGINEERING DIVISION

WILKINS ST. OVER DEQUINDRE CUT S.N. 12493

STREET LIGHTING PLAN

ISSUED FOR: DATE: BY:

JOB NO. DTE 2025-08T

SHEET 30 (403)

WILKINS STREET BRIDGE

© Wade Trim Group, Inc.

PROJECT MANAGER: –
FIELD BOOK INFORMATION: –
c:\pw_work\cometona\d0350142\CEP-PLD-Lights-Layout.dgn
PLOTTED 5/21/2013 11:03:11 AM BY Cometona

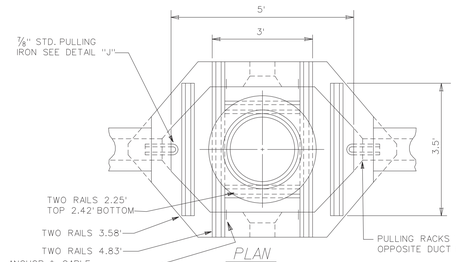

PLAN

TYPE "S" HANDHOLE

N.T.S.

TYPE "S" HANDHOLE TABLE FOR #5 BARS		
MARK	NO.	LENGTH
5-50	2	5'
5-46	8	4.5'
5-36	4	3.5'
5-30	6	2'
5-19	10	21'
5-10	8	12'

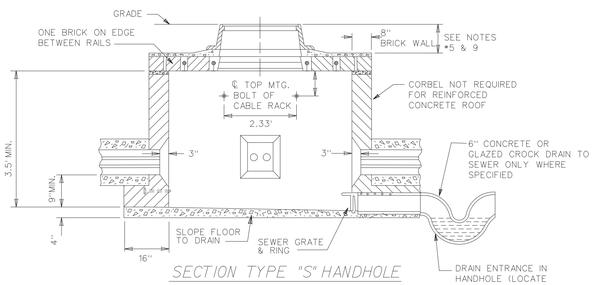

SECTION TYPE "S" HANDHOLE

N.T.S.

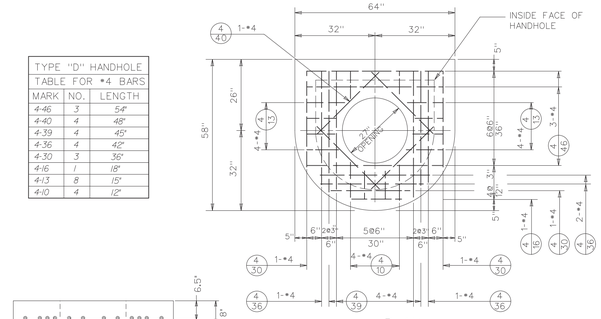

PLAN

ALTERNATE ROOF-TYPE "D" HANDHOLE

N.T.S.

TYPE "D" HANDHOLE TABLE FOR #4 BARS		
MARK	NO.	LENGTH
4-46	3	54"
4-40	4	48"
4-39	4	45"
4-36	4	42"
4-30	3	36"
4-16	1	18"
4-13	8	15"
4-10	4	12"

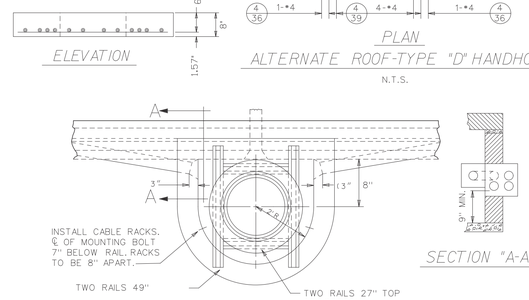

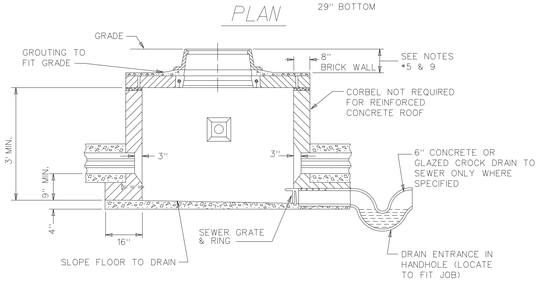

SECTION TYPE "D" HANDHOLE

N.T.S.

NOTE:

1. DUCT ENTRANCE TO BE BUILT AS REQUIRED.
2. ALL RAILS TO BE 60#/YD. OR HEAVIER.
3. CABLE PULLING IRONS TO BE GALVANIZED
4. CABLE RACKS AND ARMS TO BE GALVANIZED.
5. IN PAVEMENT PROVIDE AT LEAST 3" BETWEEN ROOF AND BASE OF PAVEMENT. WHERE EXISTING GRADE IS HIGHER THAN PROP. FUTURE GRADE INSTALL BRICK RING OR GROUT (AS REQ'D.) UNDER FRAME TO ALLOW FOR FUTURE FRAME ADJUSTMENT.
6. BAR NUMBERS DENOTE THE SIZE OF BAR REQUIRED IN ACCORDANCE WITH CURRENT USAGE SPECIFIED BY THE CONCRETE REINFORCING STEEL INSTITUTE.
7. EXCAVATION LIMITS FOR PUBLIC LIGHTING DEPARTMENT HANDHOLES SHALL BE ON VERTICAL PLANES OF THE FOOTING OUTLINE.
8. INSTALL ANCHORS & CABLE-RACKS AS SHOWN.
9. WHERE HANDHOLES ARE LOCATED BACK OF CURBS ROOF MUST BE BUILT 18" BELOW CURB GRADE, TO PROVIDE FOR FUTURE WIDENING.

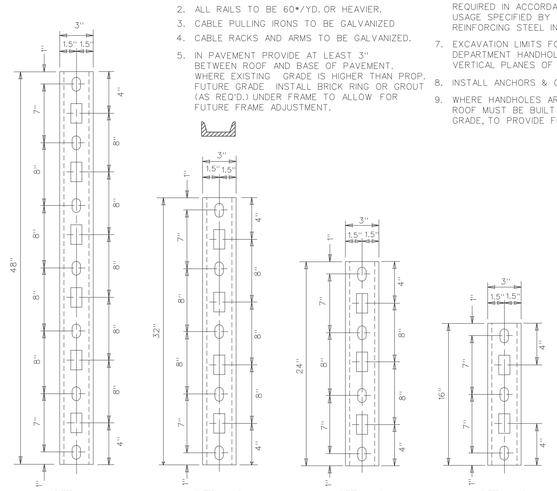

CABLE RACKS

3" STD. 4.1# CHANNEL

N.T.S.

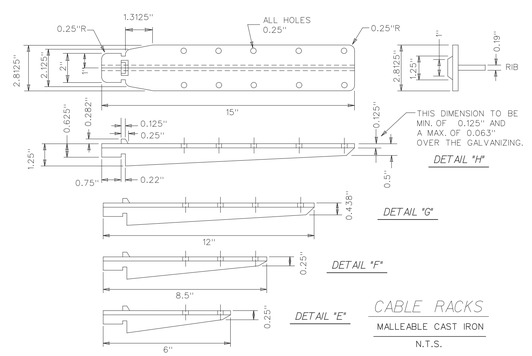

CABLE RACKS

MALLEABLE CAST IRON

N.T.S.

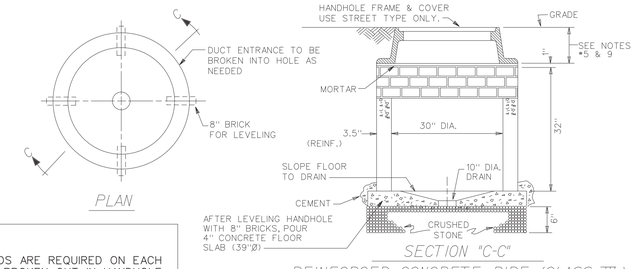

REINFORCED CONCRETE PIPE (CLASS III)

ROUND HANDHOLE

NOTE:

BELL ENDS ARE REQUIRED ON EACH CONDUIT BROKEN OUT IN HANDHOLE. TYPE AND SIZE SHALL BE IDENTICAL TO CONDUIT TYPE AND SIZE.

NOTE:

1. FRAMES MAY BE A.S.T.M. CLASS 30 GRAY IRON IF THE CONTRACTOR SO ELECTS.
2. ALL FILLETS ARE 0.5" RADIUS & ALL ROUNDS ARE 0.25" RADIUS

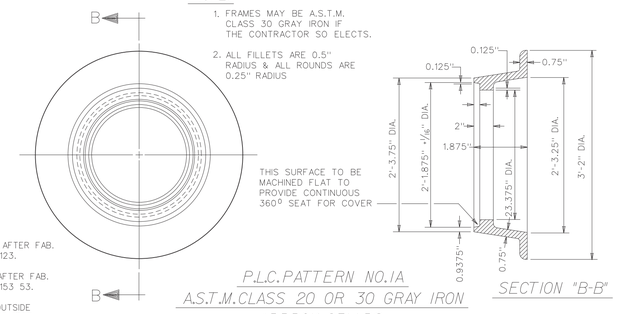

P.L.C. PATTERN NO.1A

A.S.T.M. CLASS 20 OR 30 GRAY IRON

APPROX. 251 LBS.

HANDHOLE FRAME

NOTE:

CABLE RACKS SHALL BE GALV. AFTER FAB. IN ACCORDANCE WITH ASTM A-123.

CABLE ARMS SHALL BE GALV. AFTER FAB. IN ACCORDANCE WITH ASTM A-153 53.

ARMS MUST FIT ON INSIDE & OUTSIDE OF RACKS & MUST ALLOW INSULATOR TO FIT LOOSELY.

USE 0.5" GALV. SUPPORTING BOLTS AND EXPANSION ANCHORS.

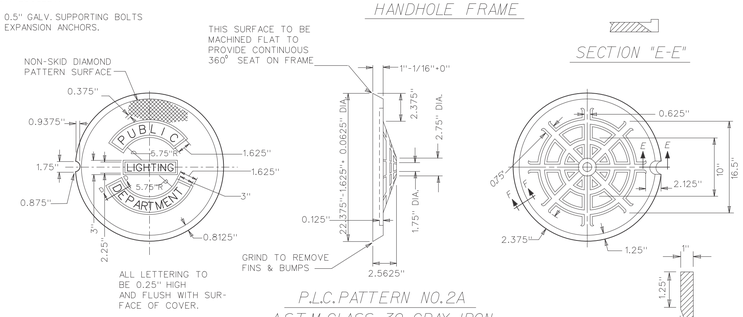

P.L.C. PATTERN NO.2A

A.S.T.M. CLASS 30 GRAY IRON

APPROX. WT. 145 LBS.

STREET TYPE COVER

TO BE USED IN STREETS & DRIVES

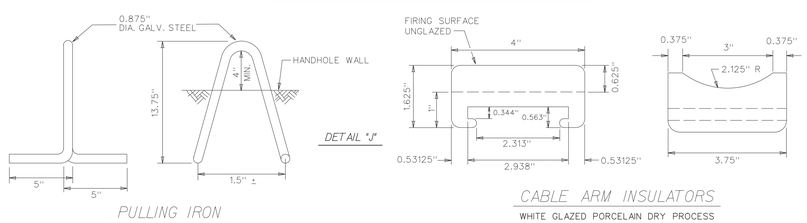

WHITE GLAZED PORCELAIN DRY PROCESS

N.T.S.

REV #	DATE	DESCRIPTION	BY

NOT VALID FOR CONSTRUCTION UNLESS SIGNED AND DATED

WADETRIM

500 Griswold, Suite 2500
Detroit, MI 48226
313.961.1450
FAX: 313.961.0888
www.wadetrim.com

Building relationships on a foundation of excellence.

CITY OF DETROIT
DEPARTMENT OF PUBLIC WORKS
CITY ENGINEERING DIVISION
WILKINS ST. OVER DEQUINDRE CUT S.N. 12493
PLD STANDARD PLAN SHEET - HANDHOLES

ISSUED FOR: DATE: BY:

JOB NO. DTE 2025-08T

SHEET 31 (404)

WILKINS STREET BRIDGE

© Wade Trim Group, Inc.

PLOTTED 5/21/2013 11:08:15 AM BY Cemetona

PROJECT MANAGER: - FIELD BOOK INFORMATION: -
C:\pw_work\cemetona\d0350142\CDT-PLS-handhole.dgn

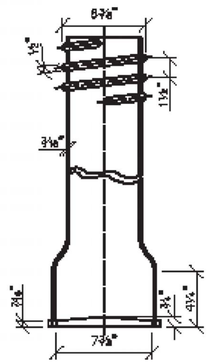

GATE BOX BOTTOM

GATE BOX TOP

GATE BOX COVER

GATE BOX BASE

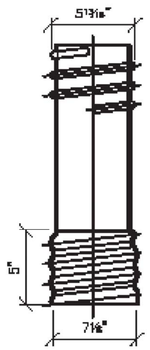

GATE BOX EXTENSION

NOTE

MATERIAL: GRAY CAST IRON PER LATEST REVISION ASTM A74 OR PLASTIC ASTM D2466 OR D2468 . PLUG TO CONTAIN AN APPROVED POLY IRON MAGNETICALLY LOCATABLE MATERIAL

C					
B					
A					
	DESCRIPTION	DRW	CKD	APP	DATE
REVISIONS					
DRAWN BY: S.D.A.					
CHECKED BY: S.D.A.					
APPROVED:					

BOX, 5 1/4 INCH, ROADWAY TELESCOPING

SCALE: NONE

CITY OF DETROIT
WATER AND SEWERAGE DEPARTMENT
ENGINEERING DIVISION

SHEET 1 OF 1

DWG No. 02620-04

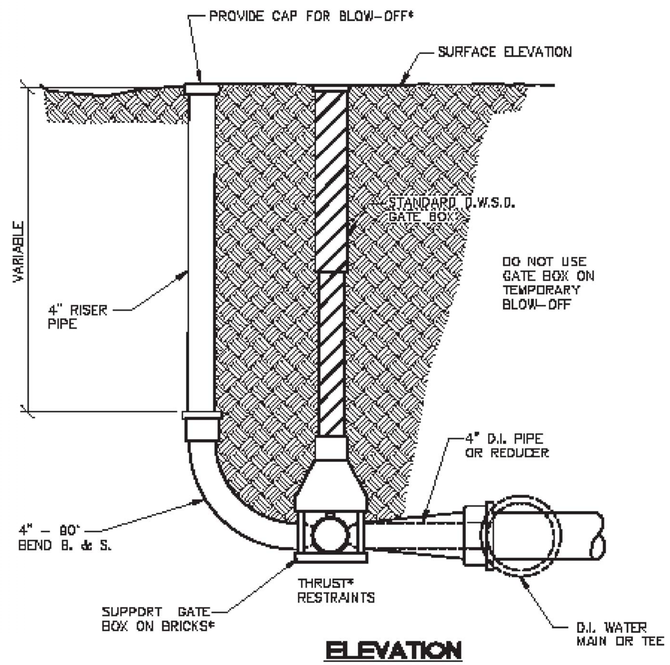

ELEVATION

NOTE

* DESIGNER SHALL DETERMINE SIZE OF STRUCTURES.

C					
B					
A					
	DESCRIPTION	DRW	CKD	APP	DATE
REVISIONS					
DRAWN BY: S.D.A.					
CHECKED BY: S.D.A.					
APPROVED:					

VALVE, BLOW OFF 4 INCH, TEMPORARY

SCALE: NONE

CITY OF DETROIT
WATER AND SEWERAGE DEPARTMENT
ENGINEERING DIVISION

SHEET 1 OF 1

DWG No. 02630-28

NOTES:

WORK THIS SHEET WITH SHEET 29.

THRUST BLOCKS ARE INCLUDED IN THE PAY ITEM "WATER MAIN, DI, 12 INCH, TR DET G".

THE 4"-90° BEND, 4" RISER PIPE AND BLOW OFF CAP SHALL BE INCLUDED IN THE PAY ITEM "GATE VALVE AND BOX, 4 INCH".

REV #	DATE	DESCRIPTION	BY

NOT VALID FOR CONSTRUCTION UNLESS SIGNED AND DATED

WADETRIM
500 Griswold, Suite 2500
Detroit, MI 48226
313.961.1880
FAX 313.961.0898
www.wadetrim.com
Building relationships on a foundation of excellence

CITY OF DETROIT
DEPARTMENT OF PUBLIC WORKS
CITY ENGINEERING DIVISION
WILKINS ST. OVER DEQUINDRE CUT S.N. 12493
DWSD STANDARD DETAILS - 1

ISSUED FOR: DATE: BY:

JOB NO. DTE 2025-08T

SHEET 32 (405)

WILKINS STREET BRIDGE

© Wade Trim Group, Inc.

PROJECT MANAGER: - FIELD BOOK INFORMATION: -
C:\pw_work\spencerro\d0350142\CEP_FLYS-Spencer@WSDGreen1.dgn
PLOTTED 5/21/2013 11:09:41 AM BY Cornelong

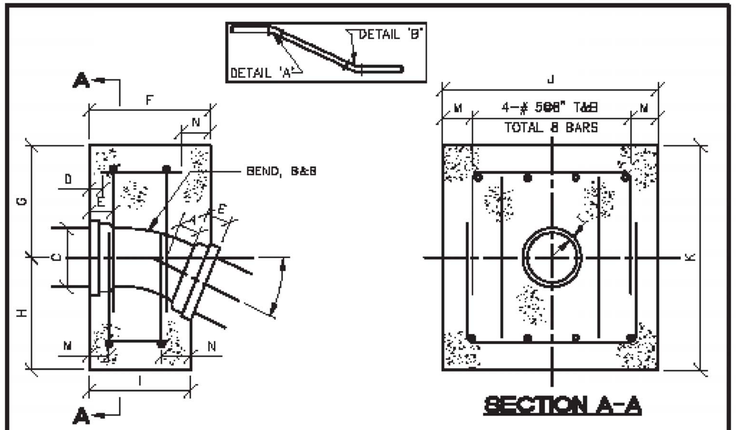

ELEVATION

SECTION A-A

SCHEDULE OF THRUST BLOCK DIMENSIONS												DIMENSIONS - INCHES					
SIZE OF PIPE (IN)	BEND IN DEGREE	F (FT)	G (FT)	H (FT)	I (FT)	J (FT)	K (FT)	L (FT)	M (FT)	N (FT)	↔	A	C	E	R	D	T
6	22½	1.583	1.33	1.67	1.33	2.67	3.00	0.00	0.33	0.25	3@8"	5.0	10.6	4.0	15.09	1.50	0.55
6	45	1.583	1.33	1.67	1.00	2.67	3.00	0.00	0.33	0.25	3@8"	5.0	10.6	4.0	07.25	1.50	0.55
8	22½	1.583	1.33	1.67	1.33	2.67	3.00	0.33	0.33	0.25	4@8"	5.5	13.0	4.0	17.62	1.50	0.60
8	45	1.67	1.50	2.50	1.00	4.00	4.00	0.50	0.50	0.25	4@12"	5.5	13.0	4.0	08.44	1.50	0.80
10	22½	1.83	1.50	2.50	1.42	3.50	4.00	0.50	0.50	0.25	4@10"	6.5	15.3	4.0	22.62	1.50	0.88
10	45	1.92	1.67	2.83	1.00	4.00	4.50	0.67	0.67	0.25	4@12"	6.5	15.3	4.0	10.88	1.50	0.88
12	22½	2.00	1.50	2.50	1.583	4.00	4.00	0.67	0.50	0.33	4@12"	7.5	17.8	4.0	27.62	1.50	0.75
12	45	2.08	1.50	3.00	1.17	5.00	4.50	0.82	0.75	0.25	4@14"	7.5	17.8	4.0	13.25	1.50	0.75
16	22½	2.17	1.67	2.83	1.583	5.00	4.50	0.83	0.75	0.33	4@14"	8.0	22.2	4.0	27.62	1.75	0.89

NOTE

THE DESIGN ENGINEER IS RESPONSIBLE FOR ENSURING THAT THE THRUST BLOCKS ARE CORRECTLY SIZED FOR EACH APPLICATION.

DETAIL "A"

C					
B					
A					
	DESCRIPTION	DRW	CKD	APP	DATE
REVISIONS					
DRAWN BY: S.D.A.					
CHECKED BY: S.D.A.					
APPROVED:					

THRUST BLOCK, VERTICAL BEND (TRADITIONAL DWSD SIZING)

SCALE: NONE

CITY OF DETROIT
WATER AND SEWERAGE DEPARTMENT
ENGINEERING DIVISION

SHEET 1 OF 2

DWG No. 03430-28

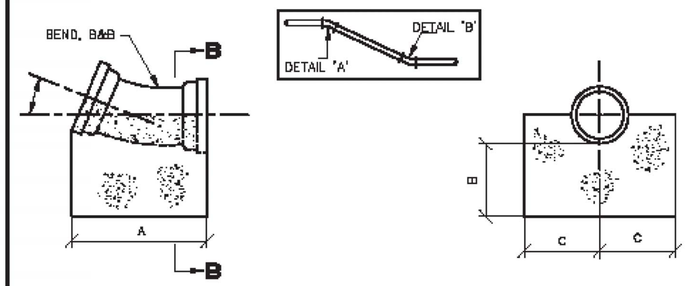

ELEVATION

SECTION B-B

SIZE OF PIPE (IN)	BEND IN DEGREE	A (FT)	B (FT)	C (FT)
6	22½	1.67	1.00	1.00
6	45	1.67	1.00	1.00
8	22½	1.75	1.00	1.00
8	45	1.75	1.00	1.00
10	22½	1.92	1.00	1.00
10	45	1.92	1.00	1.00
12	22½	2.17	1.00	1.00
12	45	2.17	1.00	1.00
16	22½	2.25	1.00	1.25
16	45	2.25	1.00	1.25

NOTE

THE DESIGN ENGINEER IS RESPONSIBLE FOR ENSURING THAT THE THRUST BLOCKS ARE CORRECTLY SIZED FOR EACH APPLICATION.

DETAIL "B"

C					
B					
A					
	DESCRIPTION	DRW	CKD	APP	DATE
REVISIONS					
DRAWN BY: S.D.A.					
CHECKED BY: S.D.A.					
APPROVED:					

THRUST BLOCK, VERTICAL BEND (TRADITIONAL DWSD SIZING)

SCALE: NONE

CITY OF DETROIT
WATER AND SEWERAGE DEPARTMENT
ENGINEERING DIVISION

SHEET 2 OF 2

DWG No. 03430-27

NOTES:

WORK THIS SHEET WITH SHEET 29.

THRUST BLOCKS ARE INCLUDED IN THE PAY ITEM "WATER MAIN, DI, 12 INCH, TR DET G".

THE 4"-90° BEND, 4" RISER PIPE AND BLOW OFF CAP SHALL BE INCLUDED IN THE PAY ITEM "GATE VALVE AND BOX, 4 INCH".

REV #	DATE	DESCRIPTION	BY

NOT VALID FOR CONSTRUCTION UNLESS SIGNED AND DATED

WADETRIM
500 Griswold, Suite 2500
Detroit, MI 48226
(313) 961-1880
FAX 313 961 0898
www.wadetrim.com

Building relationships on a foundation of excellence

CITY OF DETROIT
DEPARTMENT OF PUBLIC WORKS
CITY ENGINEERING DIVISION
WILKINS ST. OVER DEQUINDRE CUT S.N. 12493
DWSD STANDARD DETAILS - 2

ISSUED FOR: DATE: BY:

JOB NO. DTE 2025-08T

SHEET 33 (406)

WILKINS STREET BRIDGE

© Wade Trim Group, Inc.

PROJECT MANAGER:
FIELD BOOK INFORMATION: -
c:\pw_work\corporate\d0350142\CEP-PLTS Standards\Details\dwsd2.dgn
PLOTTED 5/21/2013 11:11:50 AM BY Corretjano

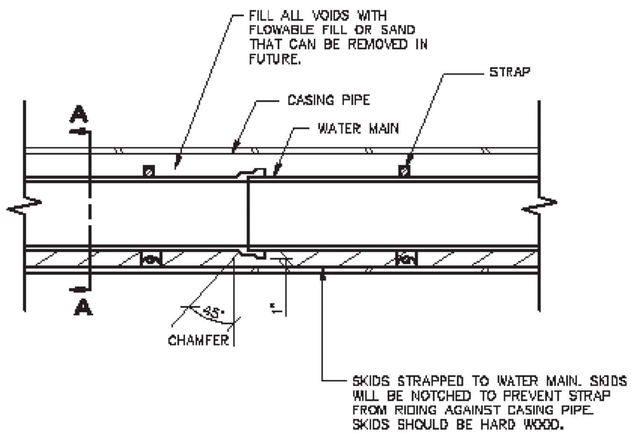

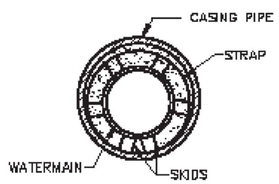

SECTION A-A

NOTES

THE ENDS OF THE CASING SHALL BE SUITABLY PROTECTED AGAINST THE ENTRANCE OF FOREIGN MATERIAL, BUT SHALL NOT BE TIGHTLY SEALED.

C					
B					
A					
	DESCRIPTION	DRW	CKD	APP	DATE
REVISIONS					

DRAWN BY: S.D.A.
CHECKED BY: S.D.A.
APPROVED:

CASING PIPE SECTION FOR WATERMAIN

SCALE: NONE

CITY OF DETROIT
WATER AND SEWERAGE DEPARTMENT
ENGINEERING DIVISION

SHEET 1 OF 1
DWG No. 02620-05

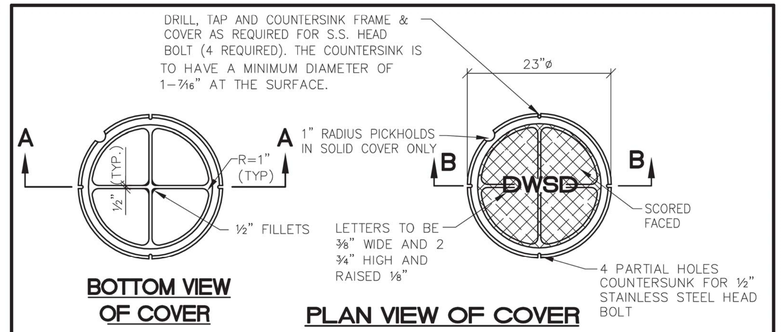

BOTTOM VIEW OF COVER

PLAN VIEW OF COVER

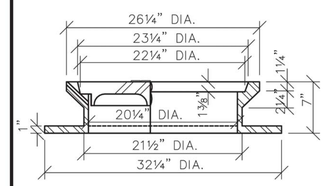

SECTION A-A

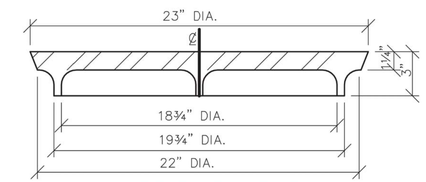

SECTION B-B

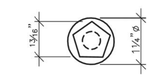

PLAN VIEW OF BOLT

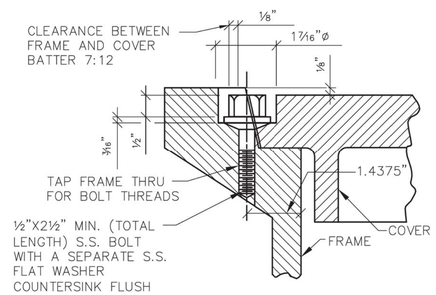

BOLT DETAIL

NOTES

1. FRAME & COVER TO BE GRAY IRON CASTING , ASTM A48, CLASS 30B
   TOTAL WT. = 409# (PERF. COVER)
   MANHOLE FRAME = 262#
   COVER (PERF) = 147#
   COVER (BLANK) = 157#
   THE SEATING FACE OF THE COVER & SEAT FOR SAME ON THE FRAME SHALL BE MACHINE FINISHED OR THE EQUIVALENT THEREOF SO THAT THE COVER SHALL HAVE AN EVEN BEARING ON ITS SEAT AT ALL POINTS WITHOUT ROCKING OR TILTING.
2. FOR ½" BOLT: NO. 13 NATIONAL STD COURSE THD.

C					
B					
A					
	DESCRIPTION	DRW	CKD	APP	DATE
REVISIONS					

DRAWN BY: S.D.A.
CHECKED BY: S.D.A.
APPROVED:

MANHOLE, COVER WITH FRAME

SCALE: NONE

CITY OF DETROIT
WATER AND SEWERAGE DEPARTMENT
ENGINEERING DIVISION

SHEET 1 OF 1
DWG No. 02600-07

NOTES:

WORK THIS SHEET WITH SHEET 29.

THRUST BLOCKS ARE INCLUDED IN THE PAY ITEM "WATER MAIN, DI, 12 INCH, TR DET G".

THE 4"-90° BEND, 4" RISER PIPE AND BLOW OFF CAP SHALL BE INCLUDED IN THE PAY ITEM "GATE VALVE AND BOX, 4 INCH".

REV#	DATE	DESCRIPTION	BY

NOT VALID FOR CONSTRUCTION UNLESS "SIGNED AND DATED"

WADETRIM
500 Griswold, Suite 2500
Detroit, MI 48226
(313) 961-1860
FAX: 313.961.0898
www.wadetrim.com

Building relationships on a foundation of excellence

CITY OF DETROIT
DEPARTMENT OF PUBLIC WORKS
CITY ENGINEERING DIVISION
WILKINS ST. OVER DEQUINDRE CUT S.N. 12493
DWSD STANDARD DETAILS - 3

ISSUED FOR: DATE: BY:

JOB NO. DTE 2025-08T

SHEET 34 (407)

WILKINS STREET BRIDGE

© Wade Trim Group, Inc.

PROJECT MANAGER: FIELD BOOK INFORMATION: -
PLOTTED 5/21/2013 11:13:33 AM BY Cametana

	BAR	DIMENSIONS a	b	c	d	e	f	g	h	j	k	m	p	NO. REQ'D	TOTAL WT.
FOOTING	EA080906	9'-6"												16	406
	EA081800	18'-0"												16	769
	EA083004	30'-4"												10	810
	EA083106	31'-6"												10	841
	EA083403	34'-3"												24	2195
	EA083404	34'-4"												24	2200
	EA083600	36'-0"												24	2307
	EA083903	39'-3"												128	13414
	EB081009	8'-3"	2'-6"											40	1148
	EB090808	7'-5"	1'-3"											46	1355
	EB090902	7'-5"	1'-9"											652	20321
	EB091002	7'-5"	2'-9"											280	9679
	EC070700	1'-5"	5'-0"				1'-5"	2'-0"						04	57
	ED040606	2'-3"	2'-0"	2'-3"										118	512
	ED070906	1'-9"	6'-0"	1'-9"										540	10486
	ED090606	1'-9"	3'-0"	1'-9"										06	133
	ED090611	1'-9"	3'-5"	1'-9"										11	259
	ED090706	1'-9"	4'-0"	1'-9"										34	867
	ED091304	8'-2"	3'-5"	1'-9"										46	2085
	EK040706	1'-9 1/4"	1'-7"	1'-7 1/4"	1'-9 1/4"									216	1082
	EK041202	2'-6"	2'-4"	2'-4"	2'-6"									216	1756
														TOTAL =	72681

	BAR	DIMENSIONS a	b	c	d	e	f	g	h	j	k	m	p	NO. REQ'D	TOTAL WT.
SILL WALL	EA080706	7'-6"												24	481
	EA081600	16'-0"												24	1025
	EA083403	34'-3"												26	2378
	EA083404	34'-4"												40	3667
	EA083500	35'-0"												13	1215
	EA083600	36'-0"												13	1250
	EC040300	0"	2'-6"	0'-4 1/4"	0'-4 1/4"	0'-6"	0"	0"						4	8
	ED091006	4'-6"	1'-6"	4'-6"										46	1642
	ED091100	4'-6"	2'-0"	4'-6"										327	12230
	ED091206	4'-6"	3'-6"	4'-6"										140	5950
	EU060409	2'-0"	1'-6"	1'-9"	1'-6"	1'-0"								6	43
														TOTAL =	29888

	BAR	DIMENSIONS a	b	c	d	e	f	g	h	j	k	m	p	NO. REQ'D	TOTAL WT.
BRIDGE RAILING	EA040203	2'-3"		6" THREADED ONE END										370	556
	EA060311	3'-11"		6" THREADED ONE END										28	165
	EA040509	5'-9"												2	8
	EA042809	28'-9"												6	115
	EA043308	31'-8"												12	540
	EA043705	37'-05"												6	600
	ED040309	1'-2"	1'-6"	1'-2"										24	60
														TOTAL =	2044

	BAR	DIMENSIONS a	b	c	d	e	f	g	h	j	k	m	p	NO. REQ'D	TOTAL WT.
RETAINING WALL CAPS & RAILING	EA040203	2'-3"												2896	4353
	EA040402	4'-2"												830	2310
	EA040306	3'-6"												1660	3881
	EA040809	8'-9"												16	94
	EA041000	10'-0"												16	107
	EA041806	18'-6"												06	74
	EA042500	25'-0"												06	100
	EA043306	33'-6"												06	134
	EA043504	35'-4"												16	378
	EA043906	39'-6"												202	5330
	EA044809	48'-9"												16	521
	EA044900	49'-0"												16	524
	ED040400	1'-0"	2'-0"	1'-0"										1448	3869
	ED040309	1'-3"	1'-3"	1'-3"										42	105
	ED040406	1'-6"	1'-6"	1'-6"										14	42
	ED040700	2'-9"	1'-6"	2'-9"										14	65
	EA060306	3'-6"												42	221
	EA060408	4'-8"												21	147
	EZ060701		2'-8"	0'-7"	3'-10"			0'-5"	0'-5"					21	223
														TOTAL =	22479

	BAR	DIMENSIONS a	b	c	d	e	f	g	h	j	k	m	p	NO. REQ'D	TOTAL WT.
AESTHETIC CONCRETE RAILING SPECIAL @ PRECAST WALLS	EA040311	3'-11"		6" THREADED ONE END										188	492
	EA040509	5'-9"												12	46
	EA042400	24'-9"												12	198
														TOTAL =	736

BILL OF MATERIALS: ROAD ITEMS (PART 1)

ITEM NUMBER	ITEM DESCRIPTION	TOTAL PLAN QUANTITY	ITEM UNIT
1027051	AUDIO-VISUAL FILMING (SN 12493)	1	LS
2030011	DR STRUCTURE, REM	2	EA
2030015	SEWER, REM, LESS THAN 24 INCH	50	FT
2040020	CURB AND GUTTER, REM	48	FT
2040045	MASONRY AND CONC STRUCTURE, REM	40	CYD
2040050	PAVT, REM	3905	SYD
2040055	SIDEWALK, REM	840	SYD
2050010	EMBANKMENT, CIP	1958	CYD
2050016	EXCAVATION, EARTH	5430	CYD
2050030	MACHINE GRADING	8	STA
3010002	SUBBASE, CIP	236	CYD
3020010	AGGREGATE BASE, 4 INCH	3165	SYD
4011136	STEEL CASING PIPE, 24 INCH, TR DET G	100	FT
4020033	SEWER, CI A, 12 INCH, TR DET B	50	FT
4030005	DR STRUCTURE COVER, ADJ CASE 1	1	EA
4030010	DR STRUCTURE, COVER, TYPE B	3	EA
4030050	DR STRUCTURE COVER, TYPE K	2	EA
4030200	DR STRUCTURE, 24 INCH DIA	1	EA
4030210	DR STRUCTURE, 48 INCH DIA	2	EA
4030306	DR STRUCTURE, TAP, 6 INCH	3	EA
4040033	UNDERDRAIN, FDN, 6 INCH	260	FT
4040093	UNDERDRAIN OUTLET, 6 INCH	65	FT
5010005	HMA SURFACE, REM	3905	SYD
6020166	CONC PAVT WITH INTEGRAL CURB, NONREINF, 9 INCH	3045	SYD
6020200	JOINT, CONTRACTION, CP	2020	FT
7067021	FLOWABLE FILL, NON-STRUCTURAL	4	CYD
8010005	DRIVEWAY, NONREINF CONC, 6 INCH	120	SYD
8020050	DRIVEWAY OPENING, CONC, DET M	87	FT
8030044	SIDEWALK, CONC, 4 INCH	19110	SFT
8100340	POST HOLE THROUGH CONC FOR STEEL POST	3	EA
8100371	POST, STEEL, 3 LB	43	FT
8100405	SIGN, TYPE IIIB	22	SFT
8110153	PAVT MRKG, SPRAYABLE THERMOPL, 4 INCH, WHITE	1400	FT
8110154	PAVT MRKG, SPRAYABLE THERMOPL, 4 INCH, YELLOW	1550	FT
8117050	PAVT MRKG, OVLY COLD PLASTIC, BIKE LANE SYM & THRU ARROW	3	EA
8117050	PAVT MRKG, OVLY COLD PLASTIC, SHARROW SYM	1	EA
8120022	BARRICADE, TYPE III, HIGH INTENSITY, LIGHTED, FURN	18	EA
8120023	BARRICADE, TYPE III, HIGH INTENSITY, LIGHTED, OPER	18	EA
8120170	MINOR TRAF DEVICES (SN 12493)	1	LS
8120350	SIGN, TYPE B, TEMP, PRISMATIC, FURN	476	SFT
8120351	SIGN, TYPE B, TEMP, PRISMATIC, OPER	428	SFT
8120352	SIGN, TYPE B, TEMP, PRISMATIC, SPECIAL, FURN	205	SFT
8120353	SIGN, TYPE B, TEMP, PRISMATIC, SPECIAL, OPER	186	SFT
8160100	SLOPE RESTORATION, TYPE A	25	SYD
8190016	CABLE, REM	605	FT
8190146	CONDUIT, SCHEDULE 40, 1 1/2 INCH	835	FT
8190152	CONDUIT, SCHEDULE 40, 5 INCH	660	FT
8190254	HH, REM	5	EA
8190262	HH, TYPE D	21	EA
8190279	LIGHT STD FDN	7	EA
8190207	DB CABLE IN CONDUIT, 600V, 1/C#4	5110	FT
8197050	FIXTURE TYPE E1	18	EA
8230050	GATE VALVE AND BOX, 4 INCH	1	EA
8230166	WATER MAIN, DI, 12 INCH, TR DET G	155	FT
8230360	GATE WELL, 60 INCH DIA	1	EA
8230421	WATER SHUTOFF, ADJ, CASE 1	3	EA
8230431	GATE BOX, ADJ, CASE 1	1	EA
8237001	WATER MAIN, REM	35	FT

BILL OF MATERIALS: BRIDGE ITEMS (PART 2)

ITEM NUMBER	ITEM DESCRIPTION	TOTAL PLAN QUANTITY	ITEM UNIT
2040001	ASBESTOS MATERIALS, REMOVAL AND DISPOSAL	5000	DLR
2047050	PILE, TIMBER, REM	20	EA
2047051	RELOCATION AND SITE CLEANUP	1	LS
2047051	STRUCTURES, REM PORTIONS, MODIFIED (SN 12493)	1	LS
2050031	NON-HAZARDOUS CONTAMINATED MATERIAL HANDLING AND DISPOSAL, LM	205	CYD
2060002	BACKFILL, STRUCTURE, CIP	1906	CYD
2060010	EXCAVATION, FDN	1866	CYD
2080020	EROSION CONTROL, INLET PROTECTION, FABRIC DROP	3	EA
2080036	EROSION CONTROL, SILT FENCE	1200	FT
2090001	PROJECT CLEANUP (SN 12493)	1	LS
4067001	CULV, PRECAST THREE-SIDED OR ARCH, MODIFIED 32 FOOT BY 11 FOOT	130	FT
7040003	STEEL SHEET PILING, TEMP, LEFT IN PLACE	125	SFT
7050001	PREBORE, FDN PILING	1224	FT
7050002	PILE DRIVING EQUIPMENT, FURN (SN 12493)	1	LS
7050030	PILE, STEEL, FURN AND DRIVEN, 12 INCH	9612	FT
7050031	TEST PILE, STEEL, 12 INCH	3	EA
7050039	PILE POINT, STEEL	69	EA
7057050	PILE, STEEL, SPLICE	241	EA
7057050	TEST PILE, DYNAMIC ANALYSIS	3	EA
7057050	TEST PILE, FURN, DYNAMIC ANALYSIS EQUIPMENT	3	EA
7057051	MONITORING VIBRATIONS (SN 12493)	1	LS
7060010	CONC, GRADE D	95	CYD
7060012	CONC, GRADE S2, SUBFOOTING	31	CYD
7060020	CONC, LOW TEMPERATURE PROTECTION	629	CYD
7060092	REINFORCEMENT, STEEL, EPOXY COATED	127827	LB
7060100	SUBSTRUCTURE CONC	503	CYD
7067011	TEXTURING CONC	560	SYD
7067021	FLOWABLE FILL	80	CYD
7087010	WINGWALL, PRECAST	615	SFT
7100001	JOINT WATERPROOFING	1350	SFT
7100011	CONC SURFACE COATING	1045	SYD
7117001	AESTHETIC CONCRETE RAILING, SPECIAL	605	FT
7117001	BRIDGE RAILING, AESTHETIC PARAPET TUBE, DETAIL 2, MODIFIED	137	FT
7120007	HAND CHIPPING, OTHER THAN DECK	1275	CFT
7120032	ADHESIVE ANCHORING OF VERTICAL BAR, 1/2 INCH	2896	EA
7120115	PATCHING CONC, M	67	CYD
7120017	PATCH FORMING	3425	SFT
8080011	FENCE, CHAIN LINK, 48 INCH	245	FT
8087010	PEDESTRIAN FENCE, SPECIAL	2945	SFT
8197050	PROTECTION, FIBER OPTIC LINE, BRIDGE	16	EA
8197050	PROTECTIVE SLEEVE, FIBER OPTIC LINE	16	EA
8197050	COORDINATION, FIBER OPTIC LINE (SN 12493)	1	LS

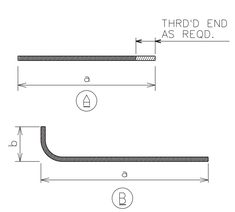

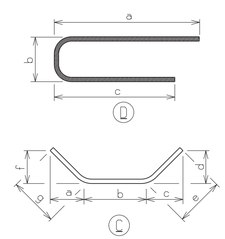

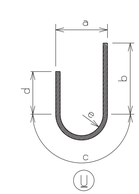

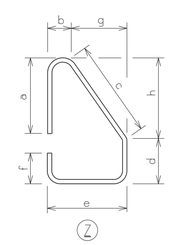

REINFORCEMENT SHALL BE BUNDLED AND TAGGED AS TO THE LOCATION AS SHOWN ON THIS SHEET.

EPOXY COATED
BAR SIZE
BAR LENGTH (FT)
BAR LENGTH (IN)
EA064700
BAR SHAPE
BAR LEGEND

MISCELLANEOUS QUANTITIES

127,827	Lb	REINFORCEMENT, STEEL, EPOXY COATED

REV#	DATE	DESCRIPTION	BY

NOT VALID FOR CONSTRUCTION UNLESS SIGNED AND DATED:

WADETRIM
500 Griswold, Suite 2500
Detroit, MI 48226
313.961.3850
FAX 313.961.1808
www.wadetrim.com

Building relationships on a foundation of excellence

CITY OF DETROIT
DEPARTMENT OF PUBLIC WORKS
CITY ENGINEERING DIVISION
WILKINS ST. OVER DEQUINDRE CUT S.N. 12493
BILL OF MATERIALS/STEEL REINFORCEMENT

ISSUED FOR: DATE: BY:

JOB NO. DTE 2025-08T

SHEET 35 (408)

WILKINS STREET BRIDGE

© Wade Trim Group, Inc.

PROJECT MANAGER: -
FIELD BOOK INFORMATION: -
c:\pw_work\tbreen\d035042\CFP-PLTS-Schedules.dgn
PLOTTED 5/22/2013 7:53:06 AM BY tbreen

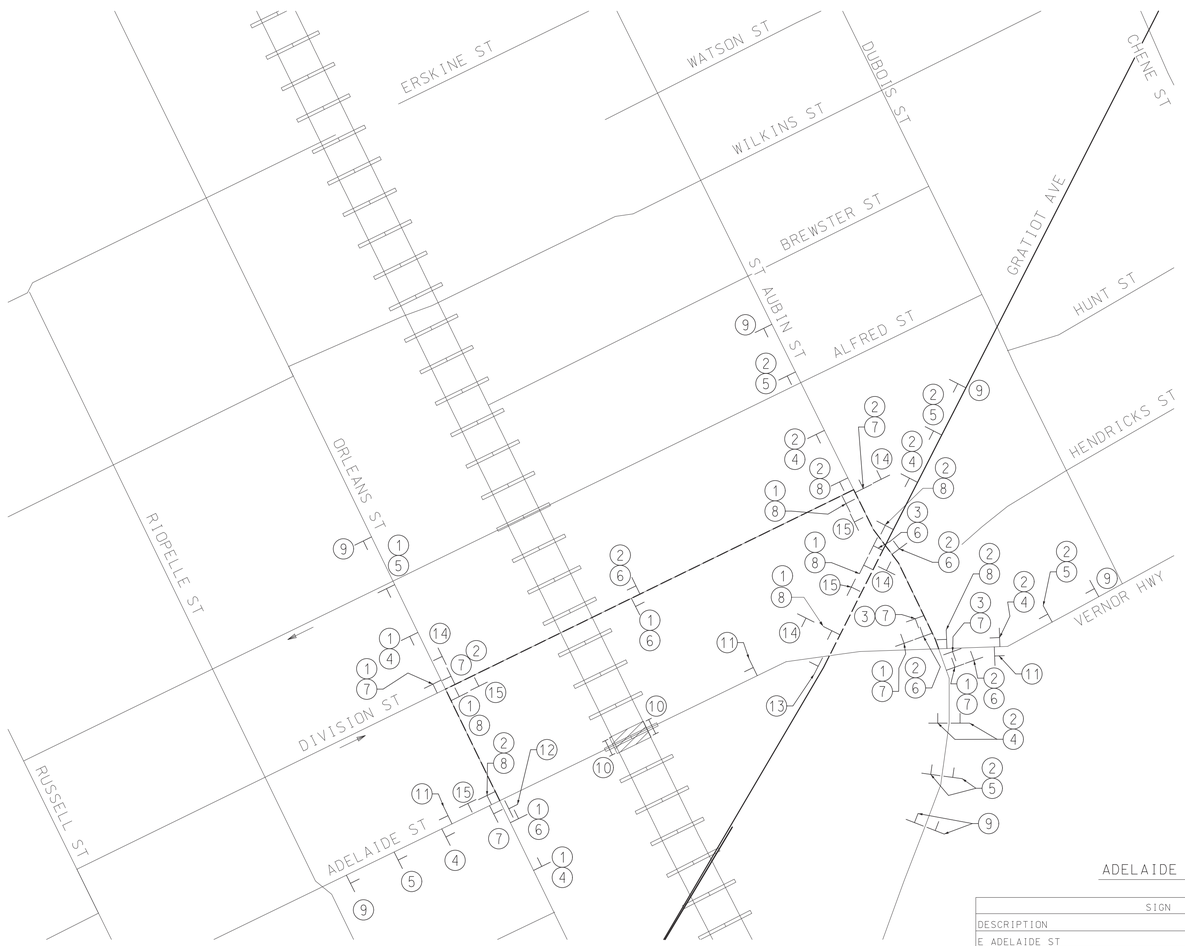

PLAN

1	E ADELAIDE	SPECIAL SIGN #1	8	DETOUR	M4-9(R)
2	W ADELAIDE	SPECIAL SIGN #2	9	ADELAIDE ST CLOSED ORLEANS ST TO GRATIOT	SPECIAL SIGN #4
3	E VERNOR HWY	SPECIAL SIGN #3	10	ROAD CLOSED 3-TYPE III BARRICADES	R11-2
4	DETOUR AHEAD	W20-2	11	END DETOUR	M4-8a
5	ROAD CLOSED AHEAD	W20-3	12	SIDEWALK CLOSED AHEAD / CROSS HERE 1-TYPE III BARRICADE	R9-11(L)
6	DETOUR	M4-9a	13	SIDEWALK CLOSED AHEAD / CROSS HERE 1-TYPE III BARRICADE	R9-11(R)
7	DETOUR	M4-9(L)	14	DETOUR M4-9b(L)	
			15	DETOUR M4-9b(R)	

WORK ZONE BEGINS — R5-18c

END ROAD WORK — G20-2

SPECIAL SIGN #1 DETAIL

SPECIAL SIGN #2 DETAIL

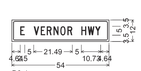

SPECIAL SIGN #3 DETAIL

SPECIAL SIGN #9 DETAIL

LEGEND

- DETOUR ROUTE
- SIGN CLUSTER NUMBER
- TYPE III BARRICADE
- WORK ZONE
- ONE-WAY STREET (FLOW OF TRAFFIC)

ADELAIDE STREET DETOUR SIGNING QUANTITIES

SIGN			SIZE(in X in)		AREA	TOTAL	TOTAL
DESCRIPTION	CODE	TYPE	IN	IN	SQ FT	QTY	AREA
E ADELAIDE ST	SPECIAL SIGN #1	B	42	12	3.5	12	42
W ADELAIDE ST	SPECIAL SIGN #2	B	42	12	3.5	20	70
E VERNOR HWY	SPECIAL SIGN #3	B	54	12	4.5	3	14
DETOUR AHEAD	W20-2	B	48	48	16.0	8	128
ROAD CLOSED AHEAD	W20-3	B	48	48	16.0	7	112
DETOUR (STRAIGHT)	M4-9a	B	30	24	5.0	7	35
DETOUR (LEFT)	M4-9(L)	B	30	24	5.0	8	40
DETOUR (RIGHT)	M4-9(R)	B	30	24	5.0	8	40
ADELAIDE ST CLOSED ORLEANS ST TO ST AUBIN	SPECIAL SIGN #4	B	48	42	14.0	7	98
ROAD CLOSED	R11-2	B	48	30	10.0	2	20
END DETOUR	M4-8a	B	30	24	5.0	3	15
BEGIN WORK ZONE	R5-18c	B	48	48	16.0	2	32
END ROAD WORK	G20-2	B	36	16	4.0	2	8
SIDEWALK CLOSED AHEAD CROSS HERE (RIGHT)	R9-11(R)	B	24	12	2.0	2	4
SIDEWALK CLOSED AHEAD CROSS HERE (RIGHT)	R9-11(R)	B	24	12	2.0	2	4
PEDESTRIAN DETOUR (LEFT)	M4-9b(L)	B	30	24	5.0	4	20
PEDESTRIAN DETOUR (RIGHT)	M4-9b(R)	B	30	24	5.0	4	20
SIGN. TYPE B. TEMP. PRISMATIC. FURN						59	534
SIGN. TYPE B. TEMP. PRISMATIC. OPER							480
SIGN. TYPE B. TEMP. PRISMATIC. SPECIAL. FURN						42	247
SIGN. TYPE B. TEMP. PRISMATIC. SPECIAL. OPER							224

		QTY
BARRICADE. TYPE III. HIGH INTENSITY. FURN	EA	10
BARRICADE. TYPE III. HIGH INTENSITY. OPER	EA	10
MINOR TRAF DEVICES (SN 12446)	LS	1

MAINTAINING TRAFFIC NOTES

1. ALL TEMPORARY CONSTRUCTION TRAFFIC APPURTENANCES, SUCH AS BARRICADES NECESSARY FOR CONSTRUCTION SHALL CONFORM TO THE 2011 MICHIGAN MANUAL OF UNIFORM TRAFFIC CONTROL DEVICES.
2. ALL CONSTRUCTION APPURTENANCES SHALL BE IN PLACE PRIOR TO THE START OF CONSTRUCTION ACTIVITIES. EXISTING SIGNS IN CONFLICT WITH THE TEMPORARY CONSTRUCTION TRAFFIC SIGNS SHALL BE COVERED OR TEMPORARILY RESET OR REMOVED AND STOCKPILED DURING CONSTRUCTION.
3. THE CONTRACTOR SHALL NOTIFY THE CITY OF DETROIT POLICE AND FIRE DEPARTMENTS IN WRITING A MINIMUM OF TEN WORKING DAYS PRIOR TO THE START OF CONSTRUCTION ON ANY ROAD CLOSURES.
4. LOCAL STREETS ADJACENT TO THE CONSTRUCTION AREA SHALL NOT BE USED BY THE CONTRACTOR FOR EQUIPMENT AND MATERIAL STORAGE.
5. THE CONTRACTOR SHALL SUBMIT A PLAN TO THE ENGINEER FOR APPROVAL FOR TRUCK OR HAUL ROUTES TO BE USED DURING CONSTRUCTION. FOR APPROVAL.
6. THE CONTRACTOR SHALL NOTIFY ADJACENT BUSINESSES IN WRITING A MINIMUM OF TEN WORKING DAYS PRIOR TO PAVEMENT REMOVAL OR ANY PLANNED CONSTRUCTION THAT MAY LIMIT OR TEMPORARILY ELIMINATE ACCESS TO THEIR PROPERTY.
7. ALL CONSTRUCTION ACTIVITIES SHALL TAKE PLACE BETWEEN THE HOURS OF 7:00 A.M. AND 7:00 P.M. MONDAY THROUGH SATURDAY. NO CONSTRUCTION ACTIVITIES, INCLUDING PAVEMENT SAW CUTTING WILL BE ALLOWED ON SUNDAYS, AND MONDAY THROUGH SATURDAY BETWEEN THE HOURS OF 7:00 P.M. AND 7:00 A.M. THE CONTRACTOR MAY REQUEST AN EXTENSION OF WORK HOURS. ANY EXTENSION OF WORK HOURS IS AT THE DISCRETION OF THE CITY OF DETROIT, CITY ENGINEERS OFFICE.
8. PLACE R5-18c AND G20-2 AT ORLEANS AND ADELAIDE AT GRATIOT AS DIRECTED BY THE ENGINEER

REV#	DATE	DESCRIPTION	BY

NOT VALID FOR CONSTRUCTION UNLESS "SIGNED AND DATED"

WADETRIM
500 Griswold, Suite 2500
Detroit, MI 48226
313.961.3650
FAX: 313.961.0898
www.wadetrim.com

Building relationships on a foundation of excellence

CITY OF DETROIT
DEPARTMENT OF PUBLIC WORKS
CITY ENGINEERING DIVISION

ADELAIDE ST. OVER DEQUINDRE CUT S.N. 12446

DETOUR PLAN

ADELAIDE STREET BRIDGE

ISSUED FOR: DATE: BY:

JOB NO. DTE 2025-09T

SHEET 2 (409)

© Wade Trim Group, Inc.

PROJECT MANAGER: -
FIELD BOOK INFORMATION: -
C:\pw_work\corretjon\d0360948\CRP-PL1S Adelaidedetour.dgn
PLOTTED 5/21/2013 11:29:09 AM BY Corretjon

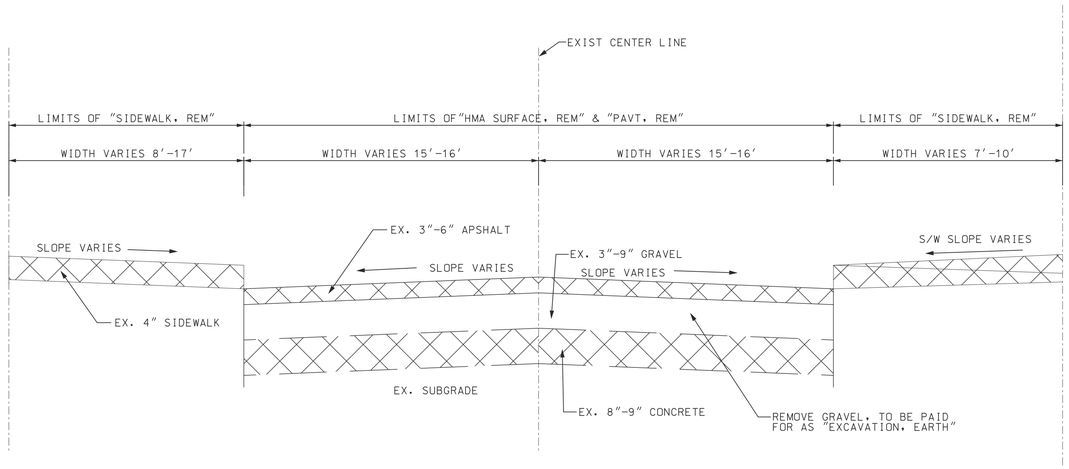

EXISTING TYPICAL CROSS SECTION

STA 2+68.47 TO STA 4+86.56

PROJECT MANAGER: -
FIELD BOOK INFORMATION: -
C:\pw_work\conetoro\d0369048\CTP-PLTS-Existing Typicals.dgn
PLOTTED 5/21/2013 11:30:57 AM BY Conetoro

REV #	DATE	DESCRIPTION	BY

NOT VALID FOR CONSTRUCTION UNLESS "SIGNED AND DATED"

WADETRIM
500 Griswold, Suite 2500
Detroit, MI 48226
313.961.3650
FAX 313.961.0898
www.wadetrim.com

Building relationships on a foundation of excellence

CITY OF DETROIT
DEPARTMENT OF PUBLIC WORKS
CITY ENGINEERING DIVISION
ADELAIDE ST. OVER DEQUINDRE CUT S.N. 124460
EXISTING ROAD TYPICAL

ISSUED FOR: DATE: BY:

JOB NO. DTE 2025-09T

SHEET 3 (410)

ADELAIDE STREET BRIDGE

© Wade Trim Group, Inc.

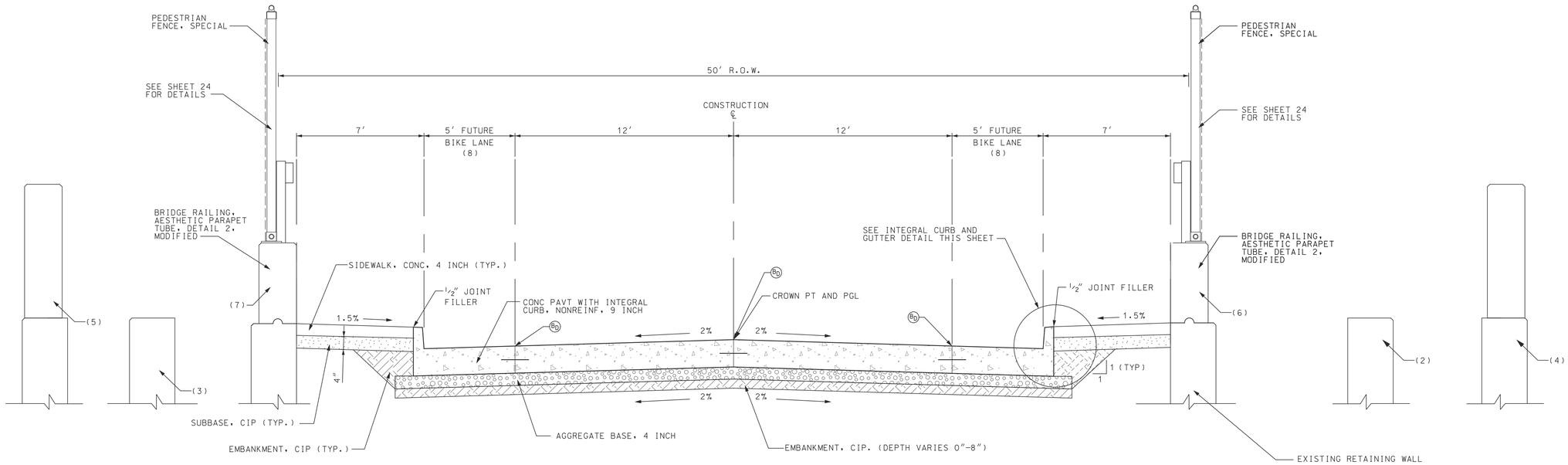

PROPOSED TYPICAL PAVEMENT SECTION

STA 2+68.41 TO STA 4+86.55
NOT TO SCALE

JOINT LEGEND

B - LONGITUDINAL BULKHEAD JOINT, SEALED ACCORDING TO STANDARD PLAN R-42 SERIES, SYMBOL (B)

D - LONGITUDINAL LANE TIE JOINT WITH TIE BARS, SEALED ACCORDING TO STANDARD PLAN R-42 SERIES, SYMBOL (D)

NOTES:

(1) NO BARRIER STA 2+68.47 TO STA 3+47.06

(2) NO BARRIER, FLUSH W/ GRADE STA 3+47.06 TO STA 3+56.51

(3) NO BARRIER, FLUSH W/ GRADE STA 3+43.98 TO STA 3+56.51

(4) PRECAST WALL W/ 3'-8 1/2" BARRIER STA 3+56.51 TO STA 3+69.60

(5) PRECAST WALLW/ 3'-8 1/2" BARRIER STA 3+56.51 TO STA 3+69.60 AND STA 4+38.10 TO STA 4+55.10

(6) @ BRIDGE - AESTHETIC PARAPET TUBE W/ PEDESTRIAN FENCE STA 3+69.60 TO STA 4+34.27

(7) @ BRIDGE - AESTHETIC PARAPET TUBE W/ PEDESTRIAN FENCE STA 3+69.60 TO STA 4+38.10

(8) WIDTH VARIES 2'-4" TO 5'-0" FROM STA 2+68.47 TO STA 3+18.41
WIDTH VARIES 5'-0" TO 2'-4" FROM STA 4+53.01 TO STA 4+86.56

(9) NO BARRIER STA 4+34.27 TO STA 4+86.55 (SOUTH SIDE)
NO BARRIER STA 4+38.10 TO STA 4+86.55 (NORTH SIDE)

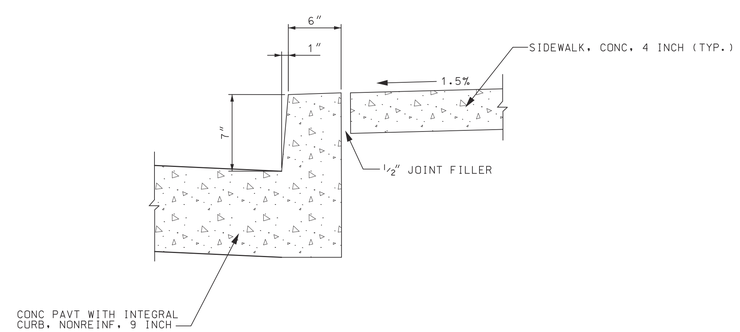

INTEGRAL CURB AND GUTTER, NONREINF, 9 INCH

REV#	DATE	DESCRIPTION	BY

NOT VALID FOR CONSTRUCTION UNLESS SIGNED AND DATED

WADETRIM
500 Griswold, Suite 2500
Detroit, MI 48226
313.961.1830
FAX 313.961.0898
www.wadetrim.com

Building relationships on a foundation of excellence

CITY OF DETROIT
DEPARTMENT OF PUBLIC WORKS
CITY ENGINEERING DIVISION
ADELAIDE ST. OVER DEQUINDRE CUT S.N. 12446
TYPICAL PAVEMENT SECTION

ISSUED FOR: DATE: BY:

JOB NO. DTE 2025-09T

SHEET 4 (411)

ADELAIDE STREET BRIDGE

© Wade Trim Group, Inc.

PROJECT MANAGER:
FIELD BOOK INFORMATION: -
c:\pw_work\corporation\d0369048\CP-FIL\S-Proposed typicalsection.dgn
PLOTTED 5/21/2013 11:33:37 AM BY Conetong

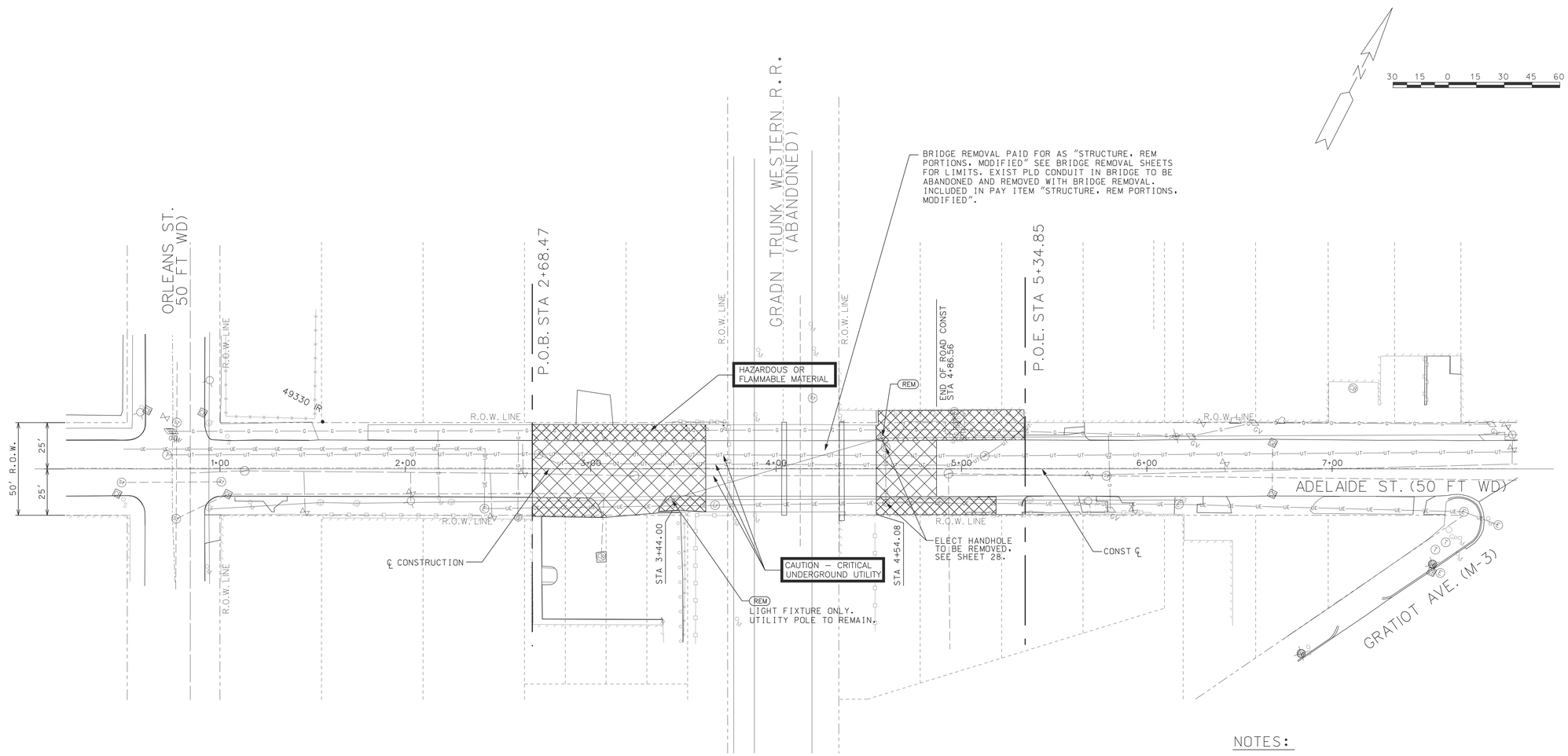

NOTES:

THE EXISTING CONCRETE PAVEMENT SHALL BE SAWED FULL DEPTH AND REMOVED IN A MANNER AS TO NOT DISRUPT OR DAMAGE THE EXISTING BUILDINGS. NO IMPACT TYPE EQUIPTMENT SHALL BE USED.

REMOVAL QUANTITIES THIS SHEET

331	SYD	SIDEWALK, REM
486	SYD	HMA SURFACE, REM
486	SYD	PAVT, REM
550	CYD	EXCAVATION, EARTH

SIDEWALK, REM

HMA SURFACE, REM AND PAVT, REM

WORK THIS SHEET WITH SHEET 28.

Know what's below.
Call before you dig.

PLOTTED 5/21/2013 11:35:32 AM BY Cometong

PROJECT MANAGER: -
FIELD BOOK INFORMATION: -
c:\pw_work\cometong\d0369048\CRP FLTS Roadremoval.dgn

REV #	DATE	DESCRIPTION	BY

NOT VALID FOR CONSTRUCTION UNLESS "SIGNED AND DATED"

WADETRIM
500 Griswold, Suite 2500
Detroit, MI 48226
313.961.3650
FAX: 313.961.0898
www.wadetrim.com

Building relationships on a foundation of excellence.

CITY OF DETROIT
DEPARTMENT OF PUBLIC WORKS
CITY ENGINEERING DIVISION
ADELAIDE ST. OVER DEQUINDRE CUT S.N. 12446
ROAD REMOVAL PLAN

ISSUED FOR: DATE: BY:

JOB NO.
DTE 2025-09T

SHEET
5
(412)

© Wade Trim Group, Inc.

ADELAIDE STREET BRIDGE

BENCHMARKS

BM*8: ARROW ON HYDRANT, NORTH WEST CORNER OF ORLEANS AND ADELAIDE
EL. 144.20

BM*9: ARROW ON HYDRANT SOUTH SIDE OF ADELAIDE, FIRST HYDRANT EAST OF BRIDGE
EL. 145.22

BM*10: NORTH BOLT AT STRAIN POLE AT SOUTH WEST CORNER OF DELAIDE AND GRATIOT
EL. 146.83

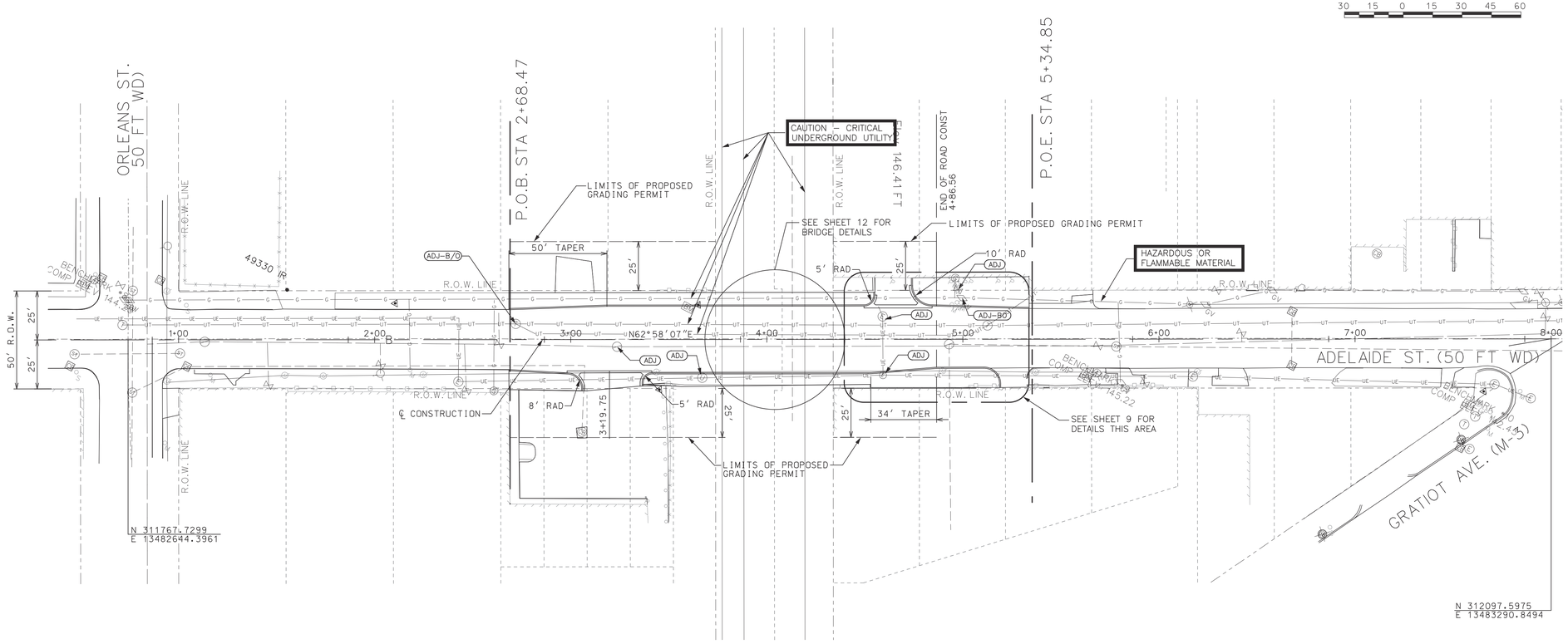

NOTE:
ADJUSTMENT OF WATER SERVICE LEAD TO BE PAID FOR AS "WATER SHUTOFF, ADJ, CASE 2".

DRIVEWAY QUANTITES THIS SHEET

STATION	PROPOSED DRIVE TOP WIDTH (FT)	DRIVEWAY, NONREINF CONC, 6 INCH (SYD)	PROPOSED DRIVE WIDTH AT CURB (FT)
3+19.75 RT	29.50	30	43.25
4+49.59 LT	18.50	30	35.00
TOTAL		60	

CONSTRUCTION QUANTITIES THIS SHEET

248	CYD	EMBANKMENT, CIP
52	CYD	SUBBASE, CIP
870	SYD	AGGREGATE BASE, 4 INCH
853	SYD	CONC PAVT WITH INTEGRAL CURB, NONREINF, 9 INCH
3880	SFT	SIDEWALK, CONC, 4 INCH
620	FT	JOINT CONTRACTION, CP
79	FT	DRIVEWAY OPENING, CONC, DET M
1	EA	GATE BOX, ADJ, CASE 1
3	EA	HH, ADJ
2	STA	MACHINE GRADING
90	FT	CURB, CONC, DET E2
7	TON	HMA PATCHING
1	EA	WATER SHUTOFF, ADJ, CASE 2

Know what's below. Call before you dig.

REV #	DATE	DESCRIPTION	BY

NOT VALID FOR CONSTRUCTION UNLESS SIGNED AND DATED

WADETRIM
500 Griswold, Suite 2500
Detroit, MI 48226
313.961.1850
FAX: 313.961.0898
www.wadetrim.com

Building relationships on a foundation of excellence.

CITY OF DETROIT
DEPARTMENT OF PUBLIC WORKS
CITY ENGINEERING DIVISION
ADELAIDE ST. OVER DEQUINDRE CUT S.N. 12446
ROAD CONSTRUCTION SHEET

ISSUED FOR: DATE: BY:

JOB NO. DTE 2025-09T

SHEET 6 (413)

© Wade Trim Group, Inc.

ADELAIDE STREET BRIDGE

PROJECT MANAGER: –
FIELD BOOK INFORMATION: –
c:\pw_work\cometona\d0369048\CRP-PL1S\RoadConstructionPlan.dgn
PLOTTED 5/21/2013 11:37:21 AM BY Cometona

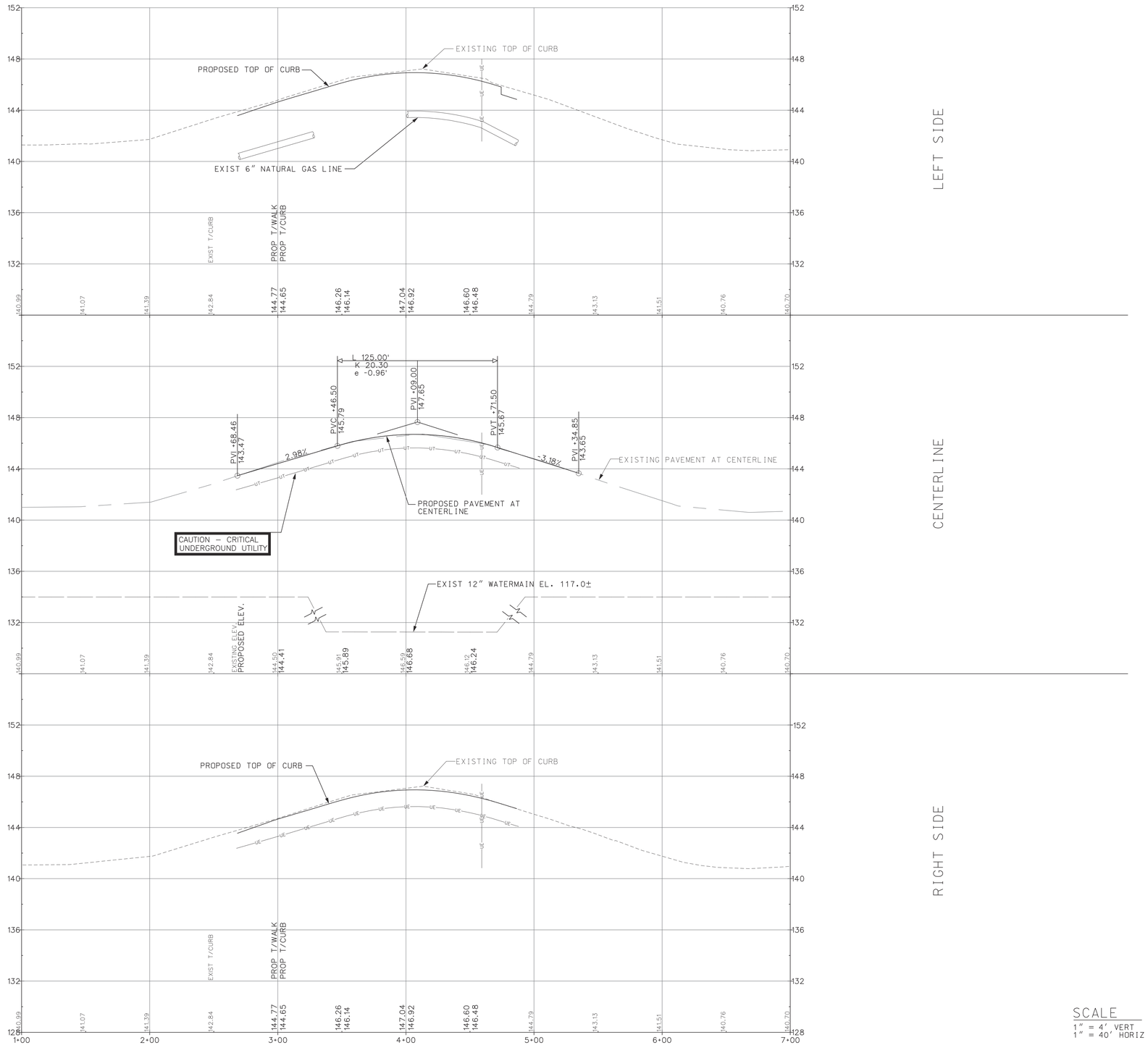

SCALE
1" = 4' VERT
1" = 40' HORIZ

REV #	DATE	DESCRIPTION	BY

NOT VALID FOR CONSTRUCTION UNLESS SIGNED AND DATED

WADETRIM
500 Griswold, Suite 2500
Detroit, MI 48226
313.961.1860
FAX: 313.961.0898
www.wadetrim.com

Building relationships on a foundation of excellence

CITY OF DETROIT
DEPARTMENT OF PUBLIC WORKS
CITY ENGINEERING DIVISION
ADELAIDE ST. OVER DEQUINDRE CUT S.N. 124446
ROAD PROFILE SHEET

ISSUED FOR: DATE: BY:

JOB NO. DTE 2025-09T

SHEET 7 (414)

© Wade Trim Group, Inc.

ADELAIDE STREET BRIDGE

PROJECT MANAGER: –
FIELD BOOK INFORMATION: –
c:\pw_work\cometona\d0369048\CPS-PLTS-ConstructionProfileSheet.dgn
PLOTTED 5/21/2013 11:38:40 AM BY Cometona

BENCHMARKS

BM*8: ARROW ON HYDRANT, NORTH WEST CORNER OF ORLEANS AND ADELAIDE
EL. 144.20

BM*9: ARROW ON HYDRANT SOUTH SIDE OF ADELAIDE, FIRST HYDRANT EAST OF BRIDGE
EL. 145.22

BM*10: NORTH BOLT AT STRAIN POLE AT SOUTH WEST CORNER OF DELAIDE AND GRATIOT
EL. 146.83

EXISTING STRUCTURE

EXISTING BRIDGE IS A 3-SPAN, CONCRETE ENCASED STEEL BEAM WITH CONCRETE DECK, CINDER FILL AND CONCRETE SURFACE AND HMA OVERLAY. THERE ARE CONCRETE PIERS AND ABUTMENTS ON SPREAD FOOTINGS. THE ORIGINAL BRIDGE WAS CONSTRUCTED APPROXIMATELY 1930.

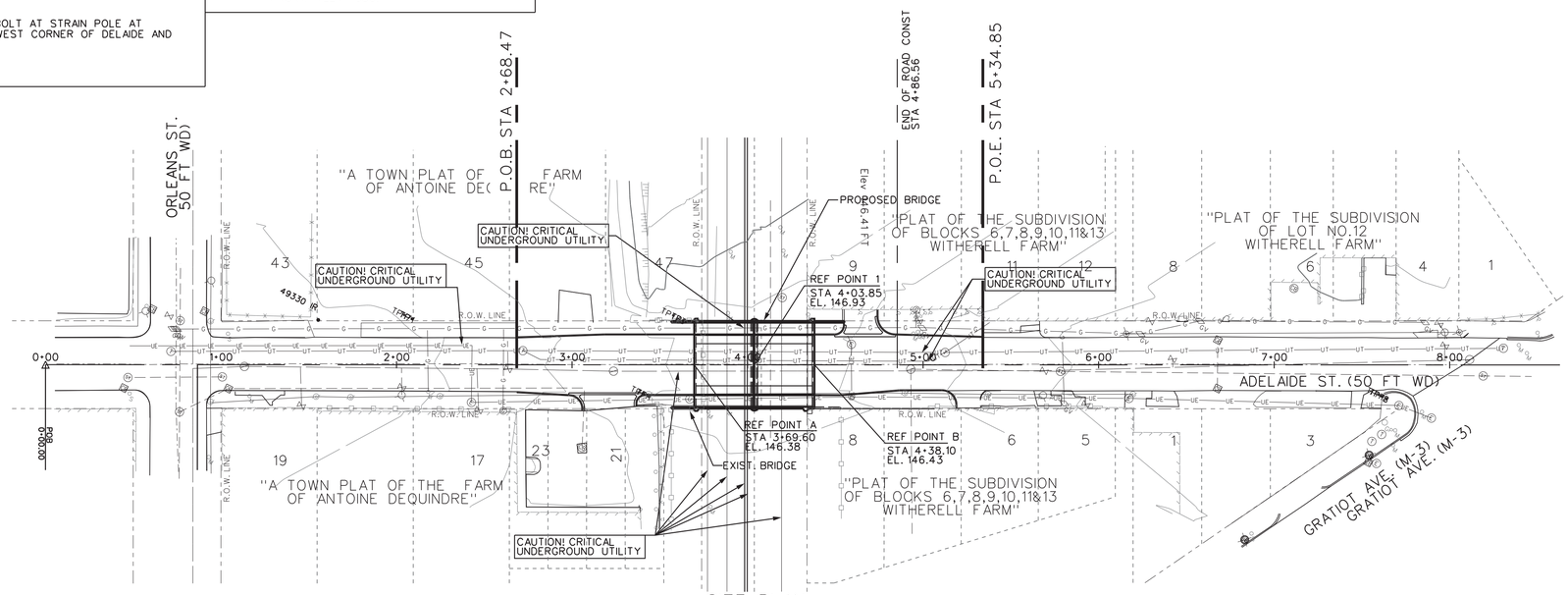

SITE PLAN

SCALE: 1"=40'

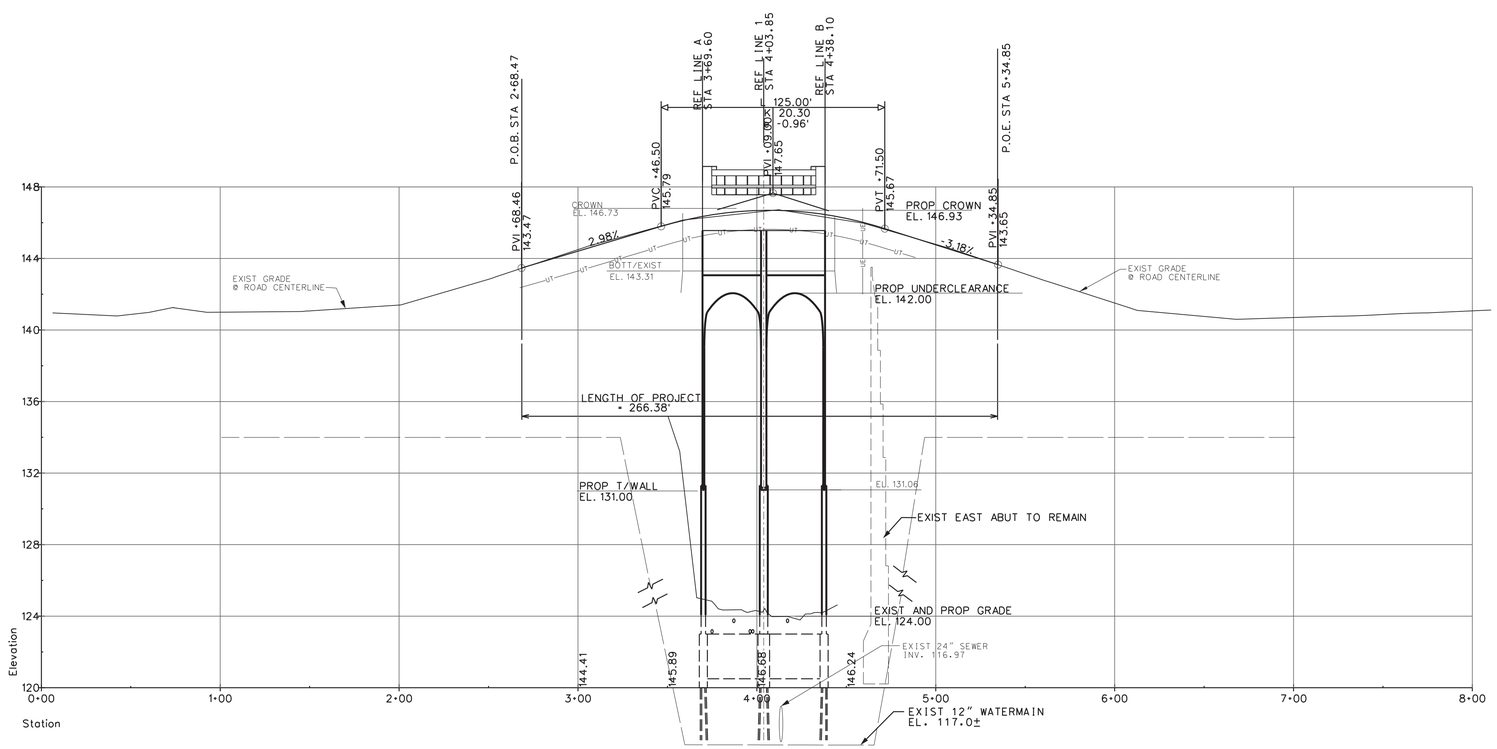

PROFILE

SCALE: VERT 1"=4'
HORZ 1"=40'

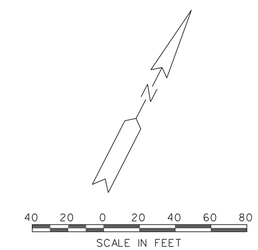

NOTES

THE WORK COVERED BY THESE PLANS INCLUDES REMOVAL OF EXISTING BRIDGE, MAINTAINING TRAFFIC, CONSTRUCTION OF THE PROPOSED BRIDGE AND APPROACHES TO THE LIMITS SHOWN.

THE CONTRACTOR SHALL LOCATE ALL ACTIVE UNDERGROUND UTILITIES PRIOR TO STARTING WORK AND SHALL CONDUCT HIS OPERATIONS IN SUCH A MANNER AS TO ENSURE THAT THOSE UTILITIES NOT REQUIRING RELOCATION WILL NOT BE DISTURBED.

ADELAIDE TRAFFIC IS TO BE DETOURED OVER OTHER EXISTING ROADS.

PLAN ELEVATIONS REFER TO CITY OF DETROIT DATUM.

DTE ELECTRIC AND GAS AND ATT CONDUITS SHALL BE RELOCATED BY OTHERS. CONTRACTOR SHALL COORDINATE HIS WORK WITH THEIR ACTIVITIES.

REV*	DATE	DESCRIPTION	BY

NOT VALID FOR CONSTRUCTION UNLESS SIGNED AND DATED.

WADE TRIM
500 Griswold, Suite 2900
Detroit, MI 48226
313.961.3650
FAX 313.961.8996
www.wadetrim.com

Building relationships on a foundation of excellence

CITY OF DETROIT
DEPARTMENT OF PUBLIC WORKS
CITY ENGINEERING DIVISION
ADELAIDE ST. OVER DEQUINDRE CUT S.N. 12446
PLAN OF SITE

ISSUED FOR: DATE: BY:

JOB NO. DTE 2025-09T

SHEET 8 (415)

ADELAIDE STREET BRIDGE

© Wade Trim Group, Inc.

PLOTTED 5/23/2013 3:21:00 PM BY rbrown

PROJECT MANAGER: -
c:\pw_work\rbrown\d0369048\CSP-PLTS-Plan of Site.dgn
FIELD BOOK INFORMATION: -

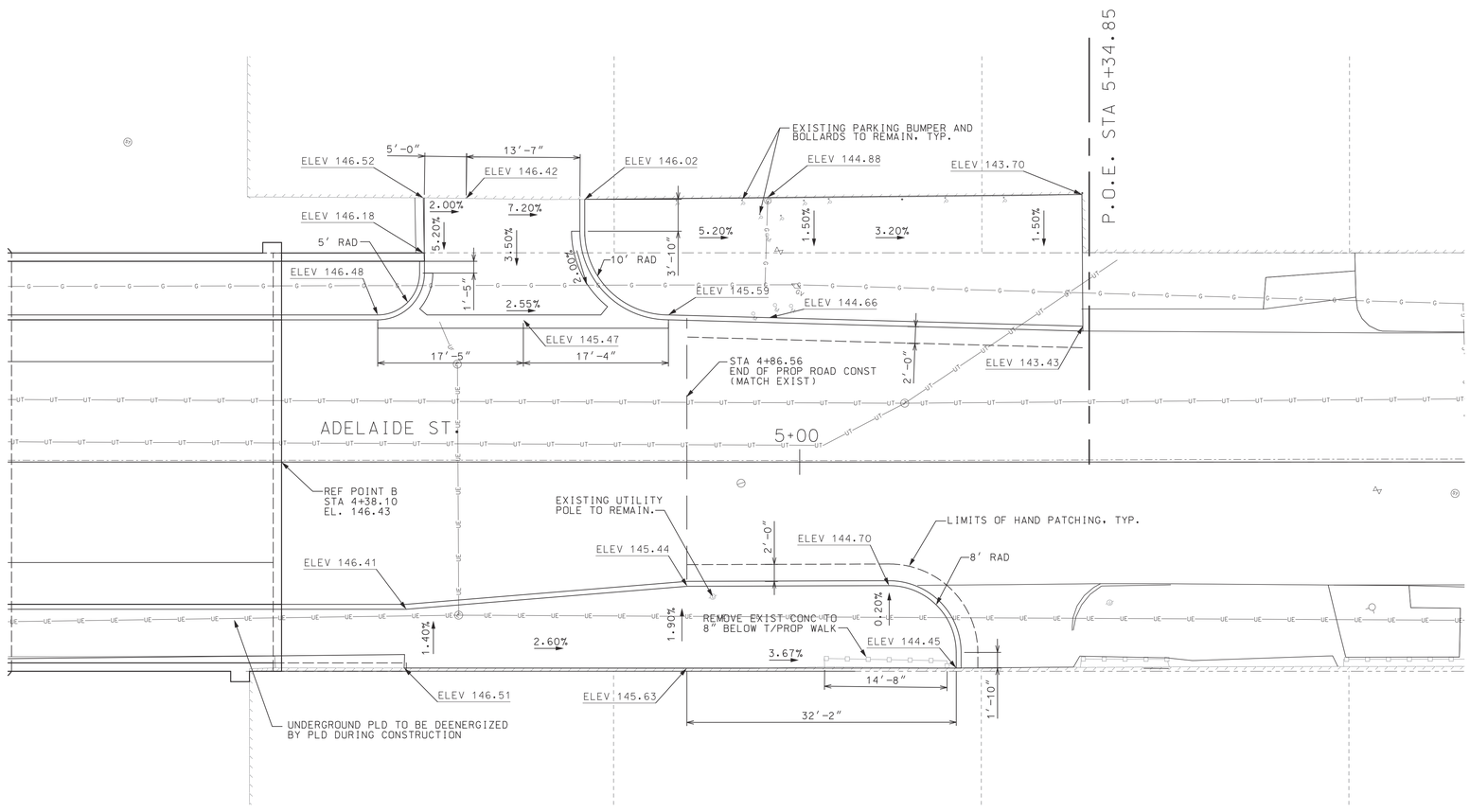

PARTIAL PLAN

NOTE:
FOR QUANTITIES THIS AREA, SEE SHEET 6

REV#	DATE	DESCRIPTION	BY

NOT VALID FOR CONSTRUCTION UNLESS SIGNED AND DATED

WADETRIM
500 Griswold, Suite 2500
Detroit, MI 48226
T: 313.961.1830
FAX: 313.961.0898
www.wadetrim.com

Building relationships on a foundation of excellence.

CITY OF DETROIT
DEPARTMENT OF PUBLIC WORKS
CITY ENGINEERING DIVISION
ADELAIDE ST. OVER DEQUINDRE CUT S.N. 12446
GRADING DETAIL SHEET

ISSUED FOR: DATE: BY:

JOB NO. DTE 2025-09T

SHEET 9 (416)

ADELAIDE STREET BRIDGE

© Wade Trim Group, Inc.

PROJECT MANAGER: Steve_Wyka.cameiana\d0369048\CSP-PLTS-Plans\Stevo\prop\prop0etail.dgn
FIELD BOOK INFORMATION: –
PLOTTED 5/21/2013 11:43:10 AM BY Cameiana

TEST BORING NO. B-01/B-01A
GROUND SURFACE EL. 146 FT DCD
(ESTIMATED FROM EXISTING DRAWINGS)

Elev.	Blows	N	Description
146.0			7 inches of ASPHALTIC CEMENT CONCRETE
145.4			9 inches of PORTLAND CEMENT CONCRETE
144.7	21 18 <>		FILL - Mixed brown silty clay and coal pieces/cinders, trace sand, gravel and brick pieces (CL)
145.0	25 15 27 <>		
142.5			
141.0	3 2 1		FILL - Very loose silty fine sand, trace clay, gravel, brick pieces and coal pieces/cinders, brown and black, moist (SM)
140.0			
138.5	1 2 2 <>		
137.5			FILL - Mixed brown silty clay and coal pieces/cinders, trace sand and gravel (CL)
132.0	2 2 2	20.9 3500*PP	
132.5			FILL - Stiff silty clay, trace to some sand, trace gravel, frequent cinder seams, brown to gray (CL)
127.5	2 3 3 <>	17.9	
			BOTT/FOOTING ABUTMENT (B/EAST) EL 120.0
122.0	3 5 6	14.6 3440	
122.5			
117.5	2 4 4	16.3 2000*PP	Stiff SILTY CLAY, trace sand and gravel, gray (CL)
112.5	2 3 4	16.9 2000#TV	
107.5	4 4 4	19.8	Loose CLAYEY SILT, trace sand, gray (ML)
106.0			Stiff SILTY CLAY, trace sand and gravel, gray (CL)
102.5	5 6 7	11.9 2000*PP	
101.0			MINIMUM PILE PENETRATION EL. 100.00 HP 12X53
97.5	3 2 3 <>	18.7	
92.5	2 2 2	18.4 1200#TV	
87.5	0 1 2	17.7 1200#TV	Medium to soft SILTY CLAY, trace sand and gravel, coarse sand seam at about 50 ft., silty fine to medium sand layer 144-145 ft., gray (CL)
82.5	0 2 1	17.6 1130	
77.5	1 2 3	18.3 1200#TV	
72.5	1 3 2	17.5 1200#TV	
67.5	0 2 1	20.3 1000#TV	

TEST BORING NO. B-01/B-01A (CONTINUED)

Elev.	Blows	N	Description
62.5	1 2 2	28.4 600#TV	
57.5	0 0 1	14.9 <>	
52.5	0 2 1	17.2 1200#TV	
47.5	0 1 3	22.6 1000#TV	
42.5	0 4 6	20.6 1400#TV	
37.5	3 6 8	21.6 1000#TV	Medium to soft SILTY CLAY, trace sand and gravel, coarse sand seam at about 50 ft., silty fine to medium sand layer 144-145 ft., gray (CL)
32.5	1 4 7	20.1 1000#TV	
27.5	1 5 7	20.9 1400#TV	
22.5	2 4 7	20.8 1600#TV	
17.5	3 5 6	22.0 860	
12.5	1 3 6	24.5 1000#TV	
7.5	3 8 9	25.5 1200#TV	
2.5	16 50/3"	23.7 1000#TV	
2.0			
-2.5	44 50/3"	11.2 9000+*PP	Hard SILTY SANDY CLAY, trace gravel, gray (CL)
			EXTIMATED PILE TIP ELEVATION HP 12X53 NOMINAL RESISTANCE = 350K
-7.5	63 75 100/4"	10.8 9000+*PP	EL. -8.0
-9.0			

NOTES:
POSSIBLE OBSTRUCTION ENCOUNTERED AT 2.5 FT., BORING OFFSET 3 FT SOUTH AND 1.5 FT EAST AND CONTINUED AS B-01A.

NO GROUNDWATER ENCOUNTERED DURING DRILLING
GROUNDWATER WAS NOT REPORTED UPON COMPLETION OF DRILLING DUE TO WASH ROTARY DRILLING METHODS

BORING TERMINATED AT A DEPTH OF 155.0 FEET BELOW EXISTING GRADE (EL. MINUS 9.0 FEET DCD).

DRILL RIG: CME 55 (AUTOMATIC HAMMER)
DRILL METHOD: 2¼INCH HSA/WR
BACKFILLED WITH: GROUT & PATCH

DATE STARTED: 03-18-13
DATE COMPLETED: 03-20-13

ENGINEER ON RIG: S.SWAMINATHAN/K.BROWN

LEGEND:

APPROXIMATE SOIL BORING LOCATION

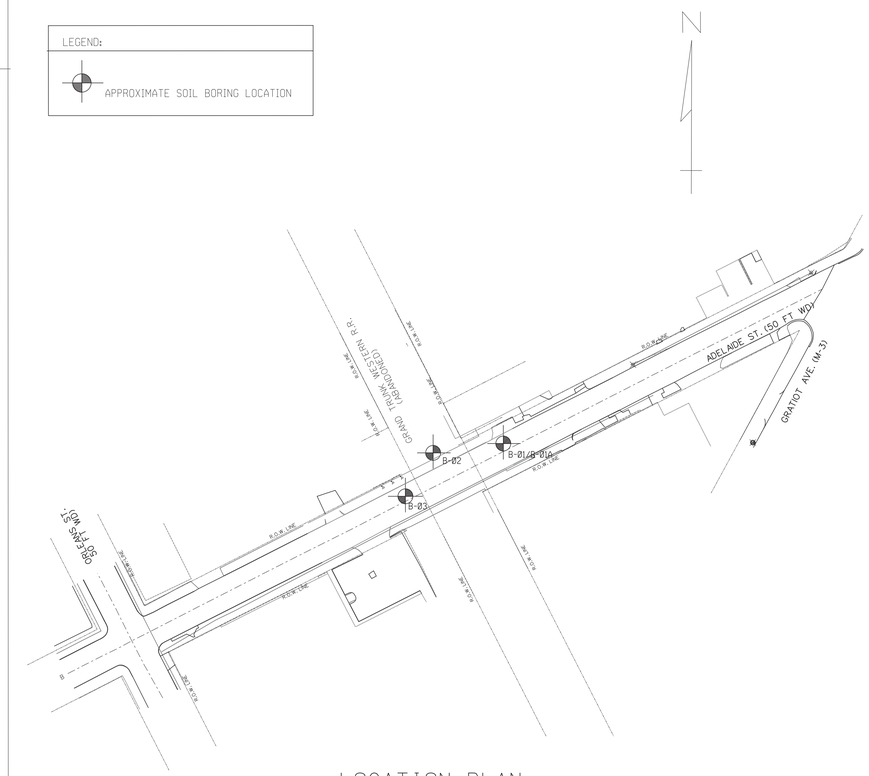

LOCATION PLAN

1ST 6 inch
2ND 6 inch
3RD 6 inch
(13 16 14) % MC UCS (PSF)

NUMBERS IN CIRCLES DENOTE NUMBER OF BLOWS REQUIRED TO DRIVE A 2 inch O.D. (1*2 inch I.D.) SPLIT SPOON SAMPLER 3 SUCCESSIVE 6 inch INCREMENTS USING A 140 LB HAMMER FALLING 2.5 ft.

LABORATORY AND FIELD TEST RESULTS SHOWN INDICATE:

MC - MOISTURE CONTENT (PERCENT)
UCS - UNCONFINED COMPRESSIVE STRENGTH LABORATORY DETERMINED POUNDS/SQ.FT (PSF)
*PP UNCONFINED COMPRESSIVE STRENGTH USING POCKET PENETROMETER POUNDS/SQ.FT (PSF)
*TV UNCONFINED COMPRESSIVE STRENGTH USING TORVANE TEST POUNDS/SQ.FT (PSF)
< > DISTURBED SAMPLE

NR NO RECOVERY

37/0" WHERE THE SAMPLER IS DRIVEN DISTANCES OTHER THAN 18 inches, THE DISTANCE IS SHOWN IN THE CIRCLE WITH THE NUMBER OF BLOWS IN THE FORM OF A FRACTION. (DISTANCE IS IN INCHES).

CONSISTENCY WAS DETERMINED BY INSPECTION OF SAMPLES AND SUBSTANTIATED BY SOIL RESISTANCE TO DRILLING TOOLS (CASING OR AUGER). UNIFIED SOIL CLASSIFICAITON SYSTEM (USCS) GROUP SYMBOL DETERMINED PER ASTM VISUAL-MANUAL PROCEDURES.

THE SOIL BORING LOGS REPRESENT POINT INFORMATION. PRESENTATION OF THIS INFORMATION IN NO WAY IMPLIES THAT THE SUBSURFACE CONDITIONS ARE THE SAME AT LOCATIONS OTHER THAN THE EXACT LOCATION OF THE BORING.

GROUNDWATER LEVELS REPRESENT THE CONDITIONS AT THE TIME THE MEASUREMENTS WERE OBTAINED AND SHOULD BE EXPECTED TO FLUCTUATE THROUGHOUT THE YEAR. GROUNDWATER LEVELS MAY ALSO BE INFLUENCED BY RESIDUAL BORING WATER.

Somat Engineering, INCORPORATED

REV #	DATE	DESCRIPTION	BY

NOT VALID FOR CONSTRUCTION UNLESS SIGNED AND DATED

WADETRIM
500 Griswold, Suite 2500
Detroit, MI 48226
313.961.3650
FAX: 313.961.0898
www.wadetrim.com

Building relationships on a foundation of excellence

CITY OF DETROIT
DEPARTMENT OF PUBLIC WORKS
CITY ENGINEERING DIVISION
ADELAIDE ST. OVER DEQUINDRE CUT S.N. 124460
LOG OF BORING

ISSUED FOR: DATE: BY:

JOB NO. DTE 2025-09T

SHEET 10 (417)

ADELAIDE STREET BRIDGE

© Wade Trim Group, Inc.

PROJECT MANAGER: -
FIELD BOOK INFORMATION: -
C:\Pw_work\cgonzalez\d0369048\C058 FL1S Soilboring-Log.dgn
PLOTTED 5/21/2013 11:44:29 AM BY Cgonzalez

TEST BORING NO. B-02
GROUND SURFACE EL. 125 FT DCD
(ESTIMATED FROM EXISTING DRAWINGS)

Elev.	Blows	MC	Qu	Description
125.0				field engineer reported frozen soil
123.5	5 5 4	13.1	6500*PP	FILL - Very stiff silty sandy clay, trace gravel, occasional clayey sand layers, brown (CL)
124.0	3 4 5	14.4	4500*PP	
121.0				
121.5	2 3 6	15.5	3480	BOTT/FOOTING PIER 1 EL 120.0
119.0	2 4 5	16.1	2000*PP	
116.5				
111.5	2 3 4	16.9	1600#TV	Very stiff to medium silty clay, trace sand and gravel, gray (CL)
106.5	1 3 4	19.2	1600#TV	
101.5	3 5 14	12.0	1400#TV	
100.0				MINIMUM PILE PENETRATION EL. 100.00 HP 12X53
96.5	11 17 17	9.3	7000*PP	Very stiff silty sandy clay, trace gravel, occasional sandy silty layers, gray (CL)
91.5	1 3 4	18.0	1400#TV	
86.5	3 3 4	18.0	800#TV	
81.5	2 2 3	18.1	800#TV	
76.5	2 3 4	18.2	1000#TV	
71.5	1 2 4	21.0	1000	Medium to soft silty clay, trace sand and gravel, gray (CL)
66.5	1 3 4	21.4	1200#TV	
61.5	0 3 3	30.3	<>	
56.5	0 2 3	23.7	800#TV	
46.5	0 3 4	20.3	1000#TV	

TEST BORING NO. B-02 (CONTINUED)

Elev.	Blows	MC	Qu	Description
36.5	0 4 4	22.1	1200#TV	
26.5	0 3 5	21.1	1200#TV	
				Medium to soft silty clay, trace sand and gravel, gray (CL)
16.5	2 3 6	23.3	1400#TV	
6.5	2 4 5	25.4	1200#TV	
3.0				
1.5	16 35 68	10.2	9000+*PP	
-3.5	50 78 100	9.9	9000+*PP	Hard silty clay, trace to some sand, trace gravel, gray (CL)
				EXTIMATED PILE TIP ELEVATION HP 12X53 NOMINAL RESISTANCE = 350K EL. -7.0
-8.5	20 28 43	16.7	9000*PP	
-13.5	31 27 32	13.2	<>	
-18.5				

NOTES:
NO GROUNDWATER ENCOUNTERED DURING DRILLING

GROUNDWATER WAS NOT REPORTED UPON COMPLETION OF DRILLING DUE TO WASH ROTARY DRILLING METHODS

BORING TERMINATED AT A DEPTH OF 143.5 FEET BELOW EXISTING GRADE (EL. MINUS 18.5 FEET DCD). BORING TERMINATED ON POSSIBLE BEDROCK.

DRILL RIG: CME 44 (AUTOMATIC HAMMER)
DRILL METHOD: 2¼INCH HSA/WR
BACKFILLED WITH: GROUT & PATCH

DATE STARTED: 03-04-13
DATE COMPLETED: 03-04-13

ENGINEER ON RIG: S.SWAMINATHAN/J.KUNZLER

LEGEND:

APPROXIMATE SOIL BORING LOCATION

LOCATION PLAN

1ST 6 inch
2ND 6 inch
3RD 6 inch
(13 16 14) % MC UCS (PSF)

NUMBERS IN CIRCLES DENOTE NUMBER OF BLOWS REQUIRED TO DRIVE A 2 inch O.D. (1*2 inch I.D.) SPLIT SPOON SAMPLER 3 SUCCESSIVE 6 inch INCREMENTS USING A 140 LB HAMMER FALLING 2.5 ft.

LABORATORY AND FIELD TEST RESULTS SHOWN INDICATE:

MC - MOISTURE CONTENT (PERCENT)
UCS - UNCONFINED COMPRESSIVE STRENGTH LABORATORY DETERMINED POUNDS/SQ.FT (PSF)
•PP UNCONFINED COMPRESSIVE STRENGTH USING POCKET PENETROMETER POUNDS/SQ.FT (PSF)
*TV UNCONFINED COMPRESSIVE STRENGTH USING TORVANE TEST POUNDS/SQ.FT (PSF)
< > DISTURBED SAMPLE

NR NO RECOVERY

37/0" WHERE THE SAMPLER IS DRIVEN DISTANCES OTHER THAN 18 inches, THE DISTANCE IS SHOWN IN THE CIRCLE WITH THE NUMBER OF BLOWS IN THE FORM OF A FRACTION. (DISTANCE IS IN INCHES).

CONSISTENCY WAS DETERMINED BY INSPECTION OF SAMPLES AND SUBSTANTIATED BY SOIL RESISTANCE TO DRILLING TOOLS (CASING OR AUGER). UNIFIED SOIL CLASSIFICAITON SYSTEM (USCS) GROUP SYMBOL DETERMINED PER ASTM VISUAL-MANUAL PROCEDURES.

THE SOIL BORING LOGS REPRESENT POINT INFORMATION. PRESENTATION OF THIS INFORMATION IN NO WAY IMPLIES THAT THE SUBSURFACE CONDITIONS ARE THE SAME AT LOCATIONS OTHER THAN THE EXACT LOCATION OF THE BORING.

GROUNDWATER LEVELS REPRESENT THE CONDITIONS AT THE TIME THE MEASUREMENTS WERE OBTAINED AND SHOULD BE EXPECTED TO FLUCTUATE THROUGHOUT THE YEAR. GROUNDWATER LEVELS MAY ALSO BE INFLUENCED BY RESIDUAL BORING WATER.

Somat Engineering, INCORPORATED

REV #	DATE	DESCRIPTION	BY

NOT VALID FOR CONSTRUCTION UNLESS SIGNED AND DATED

WADETRIM
500 Griswold, Suite 2500
Detroit, MI 48226
TEL 313.961.3650
FAX 313.961.0898
www.wadetrim.com

Building relationships on a foundation of excellence

CITY OF DETROIT
DEPARTMENT OF PUBLIC WORKS
CITY ENGINEERING DIVISION
ADELAIDE ST. OVER DEQUINDRE CUT S.N. 12446
LOG OF BORING

ISSUED FOR: DATE: BY:

JOB NO. DTE 2025-09T

SHEET 11 (418)

ADELAIDE STREET BRIDGE

© Wade Trim Group, Inc.

PROJECT MANAGER:
FIELD BOOK INFORMATION: -
C:\pw_work\corporation\d0369048\CSB-PLTS-SoilBoring-Log2.dgn
PLOTTED 5/21/2013 11:45:44 AM BY Conetana

TEST BORING NO. B-03
GROUND SURFACE EL. 146 FT DCD
(ESTIMATED FROM EXISTING DRAWINGS)

Elevation	Blows	Qu	Description
146.0			6 inches of ASPHALTIC CEMENT CONCRETE
145.5			10 inches of PORTLAND CEMENT CONCRETE
144.7	4 6 4		FILL - Mixed silty clay, sand, gravel and cinders
145.0	2 2 1		
143.0	3 2 2		FILL - Very loose gravelly fine to medium sand, trace silty, occasional silty clay pockets above 5 FT., brown, moist (SP)
142.5	2 2 2		
140.0			
137.5			
132.5	5 9 10	15.0 9000*PP	Hard to very stiff silty clay, trace to some sand, trace gravel, brown (CL)
127.5	5 7 10	15.6 4760	
126.0			
122.5	3 5 7	16.3 3000*PP	
			BOTT/FOOTING ABUTMENT (A/WEST) EL 120.0
117.5	3 4 6	15.5 2500*PP	
112.5	2 3 5	16.4 1800#TV	
107.5	0 3 4	17.4 1400#TV	
102.5	1 2 3	18.0 1000#TV	
			MINIMUM PILE PENETRATION EL. 100.00 HP 12X53
97.5	0 2 3	17.5 1000#TV	Stiff to soft silty clay, trace sand and gravel, gray (CL)
92.5	0 2 3	17.5 1600#TV	
87.5	5 3 4	14.1 1200#TV	
82.5	3 3 4	17.3 1200#TV	
77.5	3 3 5	20.0 1000#TV	
72.5	1 3 3	19.3 970	
67.5	1 2 4	20.4 1200#TV	

TEST BORING NO. B-03 (CONTINUED)

Elevation	Blows	Qu	Description
62.5	0 2 3	35.0 600#TV	
57.5	0 2 4	23.9 800#TV	
52.5	1 3 4	31.6 <>	
47.5	0 2 4	20.1 1200#TV	
42.5	2 4 6	23.5 <>	
			Stiff to soft silty clay, trace sand and gravel, gray (CL)
37.5	1 3 5	21.2 1000#TV	
32.5	0 3 6	21.0 1200#TV	
27.5	0 3 6	21.3 1410	
22.5	2 5 8	21.3 1600#TV	
17.5	1 5 7	16.0 1200#TV	
12.5	1 5 6	24.7 1400#TV	
7.5	2 5 6	24.5 800#TV	
2.5	27 35 50	10.1 9000+*PP	hard to very stiff silty clay, some sand, trace gravel, occasional silty fine sand seams above 145 ft., gray (CL)
-2.5	50	12.2 9000*PP	
-7.5	24 39 50/3"	13.9 6500*PP	EXTIMATED PILE TIP ELEVATION HP 12X53 NOMINAL RESISTANCE = 350K EL. -8.0
-9.0			

NOTES:
NO GROUNDWATER ENCOUNTERED DURING DRILLING

GROUNDWATER WAS NOT REPORTED UPON COMPLETION OF DRILLING DUE TO WASH ROTARY DRILLING METHODS

BORING TERMINATED AT A DEPTH OF 155.0 FEET BELOW EXISTING GRADE (EL. MINUS 9.0 FEET DCD).

DRILL RIG: CME 55 (AUTOMATIC HAMMER)
DRILL METHOD: 2¼INCH HSA/WR
BACKFILLED WITH: GROUT & PATCH

DATE STARTED: 03-20-13
DATE COMPLETED: 03-21-13

ENGINEER ON RIG: S.SWAMINATHAN

LEGEND:

APPROXIMATE SOIL BORING LOCATION

LOCATION PLAN

1ST 6 inch
2ND 6 inch
3RD 6 inch
(13 16 14) % MC UCS (PSF)

NUMBERS IN CIRCLES DENOTE NUMBER OF BLOWS REQUIRED TO DRIVE A 2 inch O.D. (1"I.D.) SPLIT SPOON SAMPLER 3 SUCCESSIVE 6 inch INCREMENTS USING A 140 LB HAMMER FALLING 2.5 ft.

LABORATORY AND FIELD TEST RESULTS SHOWN INDICATE:

MC - MOISTURE CONTENT (PERCENT)
UCS - UNCONFINED COMPRESSIVE STRENGTH LABORATORY DETERMINED POUNDS/SQ.FT (PSF)
*PP UNCONFINED COMPRESSIVE STRENGTH USING POCKET PENETROMETER POUNDS/SQ.FT (PSF)
*TV UNCONFINED COMPRESSIVE STRENGTH USING TORVANE TEST POUNDS/SQ.FT (PSF)
< > DISTURBED SAMPLE

NR NO RECOVERY

37/0" WHERE THE SAMPLER IS DRIVEN DISTANCES OTHER THAN 18 inches, THE DISTANCE IS SHOWN IN THE CIRCLE WITH THE NUMBER OF BLOWS IN THE FORM OF A FRACTION. (DISTANCE IS IN INCHES).

CONSISTENCY WAS DETERMINED BY INSPECTION OF SAMPLES AND SUBSTANTIATED BY SOIL RESISTANCE TO DRILLING TOOLS (CASING OR AUGER). UNIFIED SOIL CLASSIFICAITON SYSTEM (USCS) GROUP SYMBOL DETERMINED PER ASTM VISUAL-MANUAL PROCEDURES.

THE SOIL BORING LOGS REPRESENT POINT INFORMATION. PRESENTATION OF THIS INFORMATION IN NO WAY IMPLIES THAT THE SUBSURFACE CONDITIONS ARE THE SAME AT LOCATIONS OTHER THAN THE EXACT LOCATION OF THE BORING.

GROUNDWATER LEVELS REPRESENT THE CONDITIONS AT THE TIME THE MEASUREMENTS WERE OBTAINED AND SHOULD BE EXPECTED TO FLUCTUATE THROUGHOUT THE YEAR. GROUNDWATER LEVELS MAY ALSO BE INFLUENCED BY RESIDUAL BORING WATER.

Somat Engineering, INCORPORATED

REV #	DATE	DESCRIPTION	BY

NOT VALID FOR CONSTRUCTION UNLESS SIGNED AND DATED

WADETRIM
500 Griswold, Suite 2500
Detroit, MI 48226
313.961.3650
FAX: 313.961.0898
www.wadetrim.com

Building relationships on a foundation of excellence.

CITY OF DETROIT
DEPARTMENT OF PUBLIC WORKS
CITY ENGINEERING DIVISION
ADELAIDE ST. OVER DEQUINDRE CUT S.N. 12446
LOG OF BORING

ISSUED FOR: DATE: BY:

JOB NO. DTE 2025-09T

SHEET 12 (419)

ADELAIDE STREET BRIDGE

© Wade Trim Group, Inc.

PROJECT MANAGER: -
C:\pw_work\Cymetrons\d0369048\CS58_FLTS-Sadborng-09-3.dgn
FIELD BOOK INFORMATION: -
PLOTTED 5/21/2013 11:46:59 AM BY Cymetrons

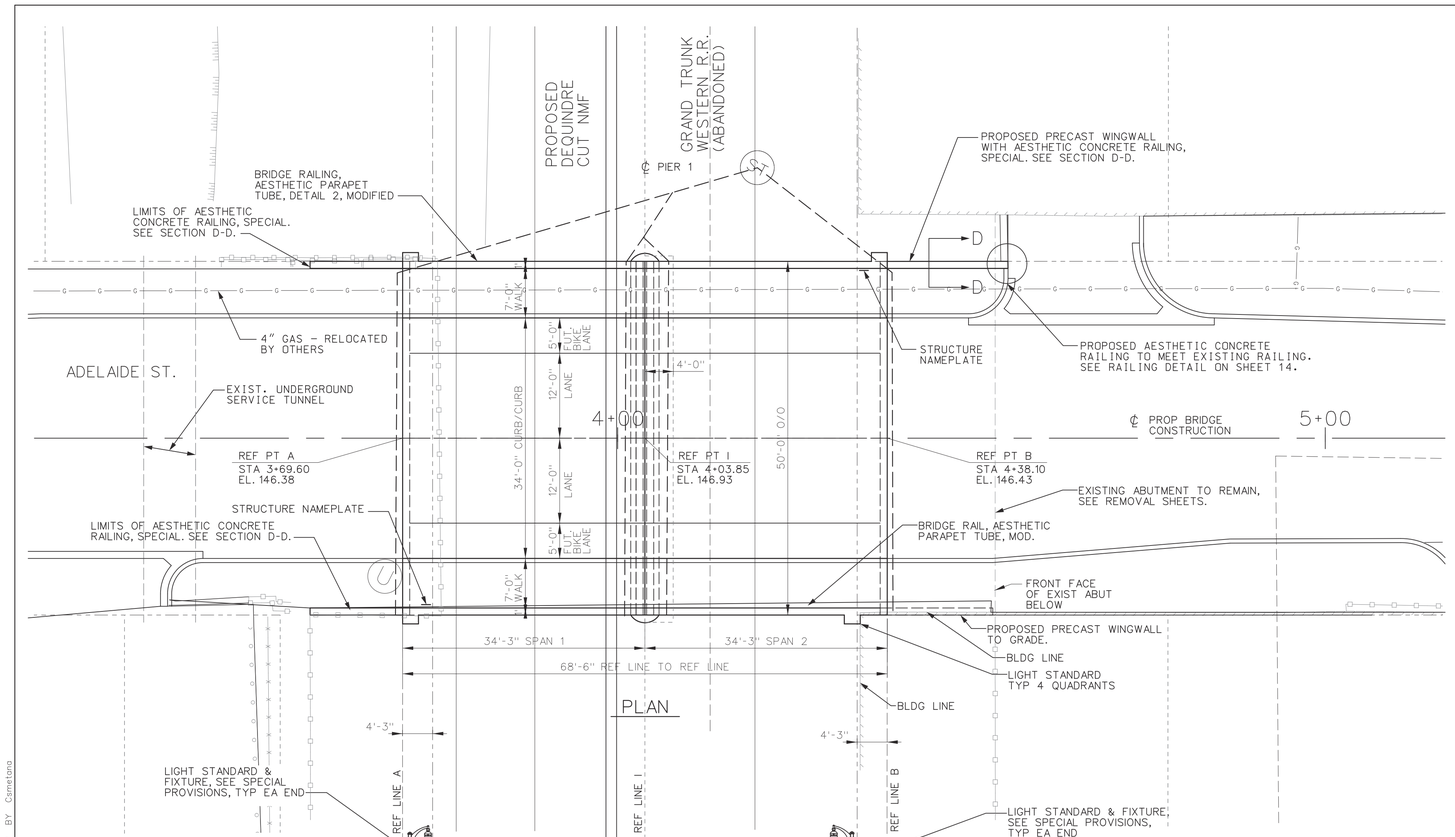

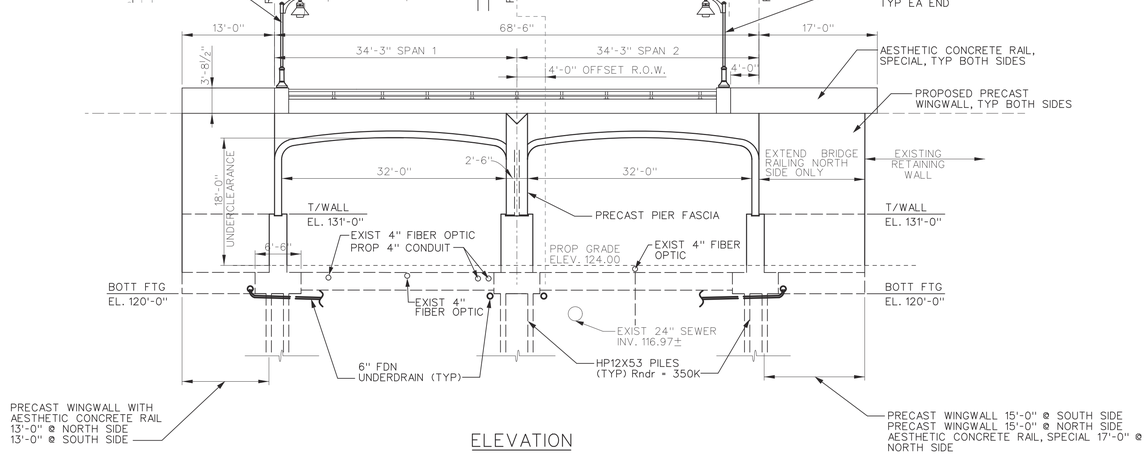

ELEVATION

NOTE: PEDESTRIAN FENCE, SPECIAL NOT SHOWN FOR CLARITY.

FOR DETAILS OF FIBER OPTIC CABLE PROTECTION, SEE SHEET 18

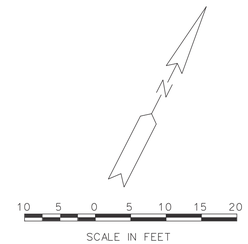

NOTES:

THE DESIGN OF THIS STRUCTURE IS BASED ON 1.2 TIMES THE CURRENT AASHTO LRFD BRIDGE DESIGN SPECIFICATION HL-93 LOADING WITH THE EXCEPTION THAT THE DESIGN TANDEM PORTION OF THE HL-93 LOAD DEFINITION SHALL BE REPLACED BY A SINGLE 60 KIP AXLE LOAD BEFORE APPLICATION OF THIS 1.2 FACTOR. THE RESULTING LOAD IS DESIGNATED HL-93 MOD. LIVE LOAD PLUS DYNAMIC LOAD ALLOWANCE DEFLECTION DOES NOT EXCEED 1/1000 OF SPAN LENGTH.

CONCRETE SURFACE COATING SHALL BE APPLIED TO EXPOSED FACES OF RAILING, ARCH FASCIAS AND PIER FASCIA. EXPOSED RETAINING WALLS AND BRIDGE RAILING SHALL ALSO BE COATED. SEE DETAIL SHEETS FOR LIMITS OF COVERAGE.

EXISTING BRIDGE NAMEPLATES ARE TO BE SALVAGED ON SITE AND SHALL BE GIVEN TO THE ENGINEER AND BECOME THE PROPERTY OF THE CITY OF DETROIT.

SEE REMOVAL SHEETS FOR LIMIT OF EXISTING STRUCTURE, REMOVALS.

REMOVAL OF BRIDGE SUPERSTRUCTURE, CONCRETE PIERS AND CONCRETE ABUTMENTS SHALL BE PAID FOR AS "STRUCTURE, REM PORTIONS, MODIFIED"

REMOVAL OF PORTIONS OF CONCRETE RETAINING WALL SHALL BE PAID FOR AS "STRUCTURE, REM PORTIONS, MODIFIED".

EXISTING PLANS INDICATE ALL PILES OMITTED (SEE SHEET 16). IF EXISTING TIMBER PILES ARE LOCATED WITHIN THE PROPOSED FOOTINGS, THE CONTRACTOR SHALL DO THE FOLLOWING WORK:

- IF THE EXISTING PILE IS IN CONFLICT WITH PROPOSED PILING, IT SHALL BE REMOVED.

- IF EXISTING PILE IS NOT IN CONFLICT WITH PROPOSED, THE EXISTING PILE SHALL BE CUT DOWN 6'-0" BELOW BOTTOM OF PROPOSED FOOTING.

REMOVAL OF EXIST PILES SHALL BE PAID FOR AS "PILE, TIMBER, REM" CUTTING DOWN OF PILES SHALL BE INCLUDED IN THE PAY ITEM "STRUCTURES, REM PORTIONS, MODIFIED".

SEE SPECIAL PROVISION ON FIBER OPTIC COORDINATION AND PROTECTION. SEE SHEET 19 FOR SLEEVE DETAIL.

CONDUITS IN BRIDGE MAY BE ASBESTOS. CONSTRACTOR SHALL CONFIRM.

MISCELLANEOUS QUANTITES

5000	DLR	ASBESTOS MATERIALS, REMOVAL AND DISPOSAL
1	LS	AUDIO-VISUAL FILMING (SN 12446)
1	LS	PROJECT CLEANUP (SN 12446)
1	LS	STRUCTURES, REM PORTIONS, MODIFIED (SN 12446)
1186	CYD	BACKFILL, STRUCTURE, CIP
1691	CYD	EXCAVATION, FDN
3	EA	EROSION CONTROL, INLET PROTECTION, FABRIC DROP
450	FT	EROSION CONTROL, SILT FENCE
10	SYD	SLOPE RESTORATION, TYPE A
200	FT	UNDERDRAIN, FDN, 6 INCH
95	FT	UNDERDRAIN, OUTLET, 6 INCH
3	EA	DR STRUCTURE TAP, 6 INCH
20	EA	TIMBER, PILE, REM
160	CYD	NON-HAZARDOUS CONTAMINATED MATERIAL HANDLING AND DISPOSAL, LM
1	LS	RELOCATION AND SITE CLEANUP (SN 12446)
1	LS	COORDINATION, FIBER OPTIC LINE, (SN 12446)
16	EA	PROTECTION, FIBER OPTIC LINE, BRIDGE

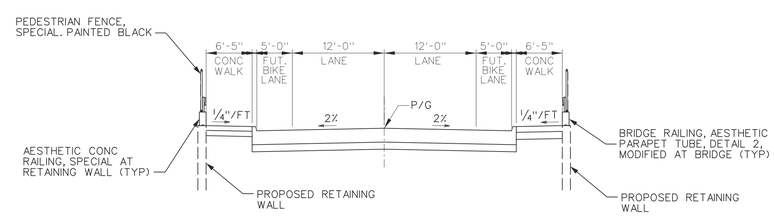

APPROACH SECTION

REV #	DATE	DESCRIPTION	BY

NOT VALID FOR CONSTRUCTION UNLESS SIGNED AND DATED

WADETRIM
500 Griswold, Suite 2500
Detroit, MI 48226
313.961.1450
FAX: 313.961.8898
www.wadetrim.com

Building relationships on a foundation of excellence.

CITY OF DETROIT
DEPARTMENT OF PUBLIC WORKS
CITY ENGINEERING DIVISION
ADELAIDE ST. OVER DEQUINDRE CUT S.N. 12446
GENERAL PLAN OF STRUCTURE

ISSUED FOR: DATE: BY:

JOB NO. DTE 2025-09T

SHEET 13 (420)

ADELAIDE STREET BRIDGE

© Wade Trim Group, Inc.

PROJECT MANAGER:-
FIELD BOOK INFORMATION: -
c:\pw_work\cometana\d0369048\CSP-FL1S Structure01.dgn
PLOTTED 5/21/2013 11:48:32 AM BY Cometana

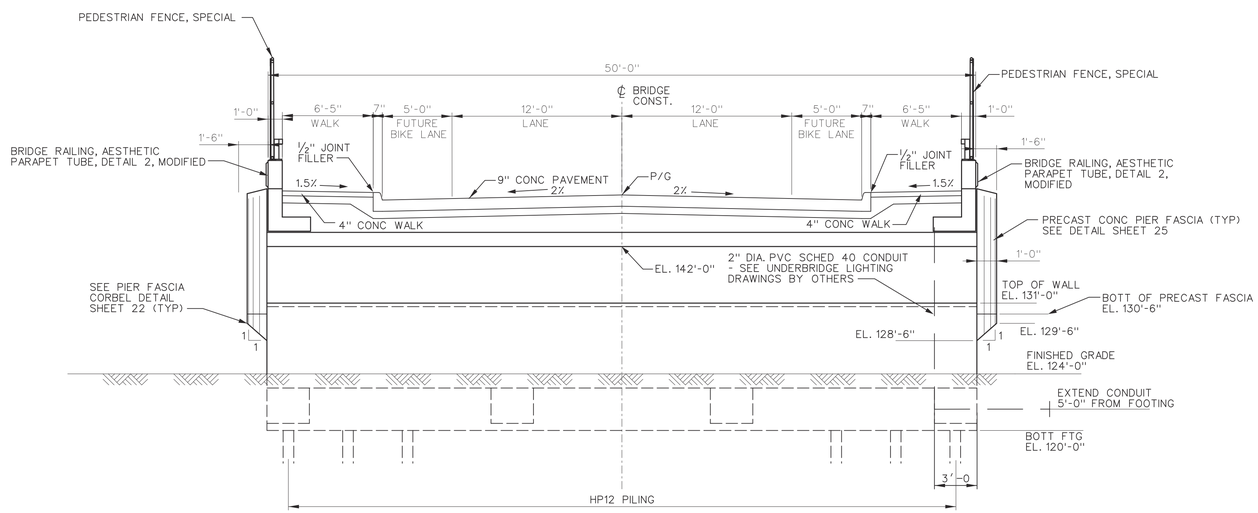

BRIDGE SECTION

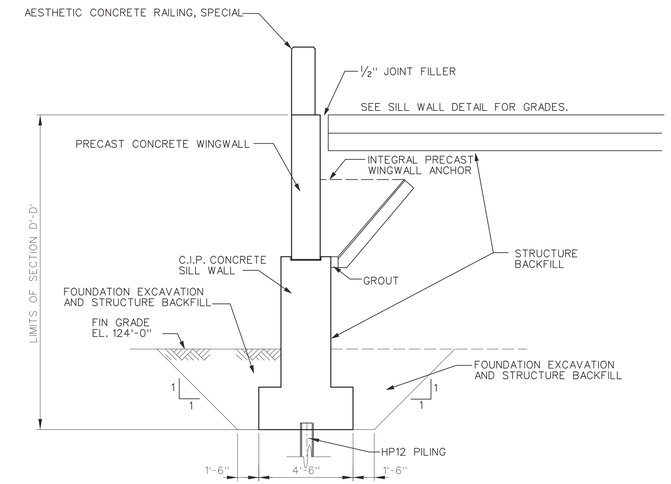

SECTION D-D
AS SHOWN

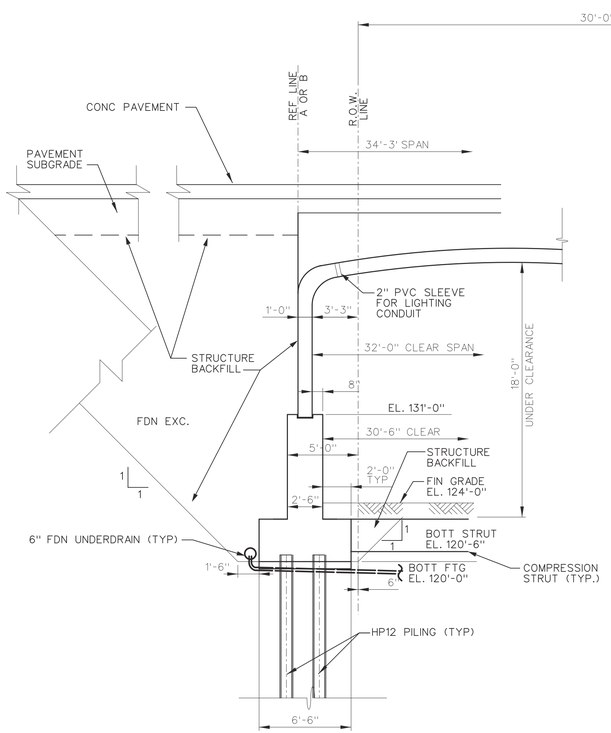

SECTION THRU ABUTMENT

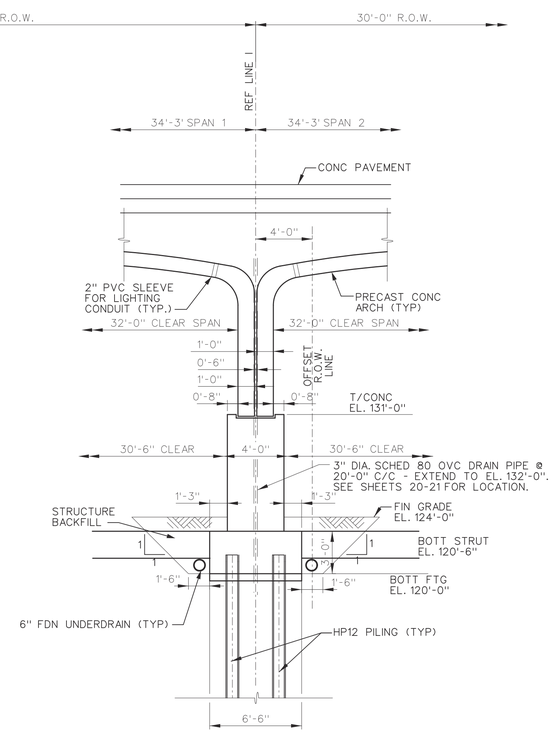

SECTION THRU PIER

NOTE:

SAWCUT EXIST RAIL AND REMOVE PORTION NECESSARY FOR PLACEMENT OF PROPOSED AESTHETIC CONCRETE RAILING. PORTION OF EXISTING RAILING ATTATCHED TO BUILDING TO REMAIN. SAWCUT AND REMOVAL INCLUDED IN PAY ITEM "STRUCTURE, REM PORTIONS, MOD."

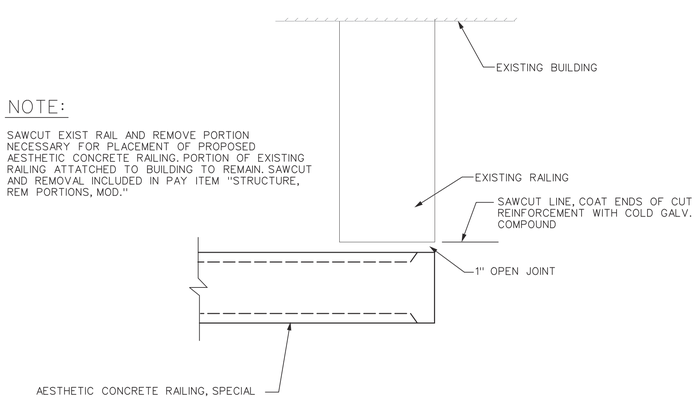

RAILING DETAIL
AS SHOWN

REV #	DATE	DESCRIPTION	BY

NOT VALID FOR CONSTRUCTION UNLESS SIGNED AND DATED

WADETRIM
500 Griswold, Suite 2500
Detroit, MI 48226
313.962.8925
FAX: 313.961.0888
www.wadetrim.com

Building relationships on a foundation of excellence

CITY OF DETROIT
DEPARTMENT OF PUBLIC WORKS
CITY ENGINEERING DIVISION
ADELAIDE ST. OVER DEQUINDRE CUT S.N. 12446
GENERAL PLAN OF STRUCTURE DETAILS

ISSUED FOR: DATE: BY:

JOB NO. DTE 2025-09T

SHEET 14 (421)

ADELAIDE STREET BRIDGE

© Wade Trim Group, Inc.

PROJECT MANAGER: - FIELD BOOK INFORMATION: -
C:\pw_work\cgenetona\d0369048\CDT_PLTS-det001.dgn
PLOTTED 5/21/2013 11:52:50 AM BY Cgenetona

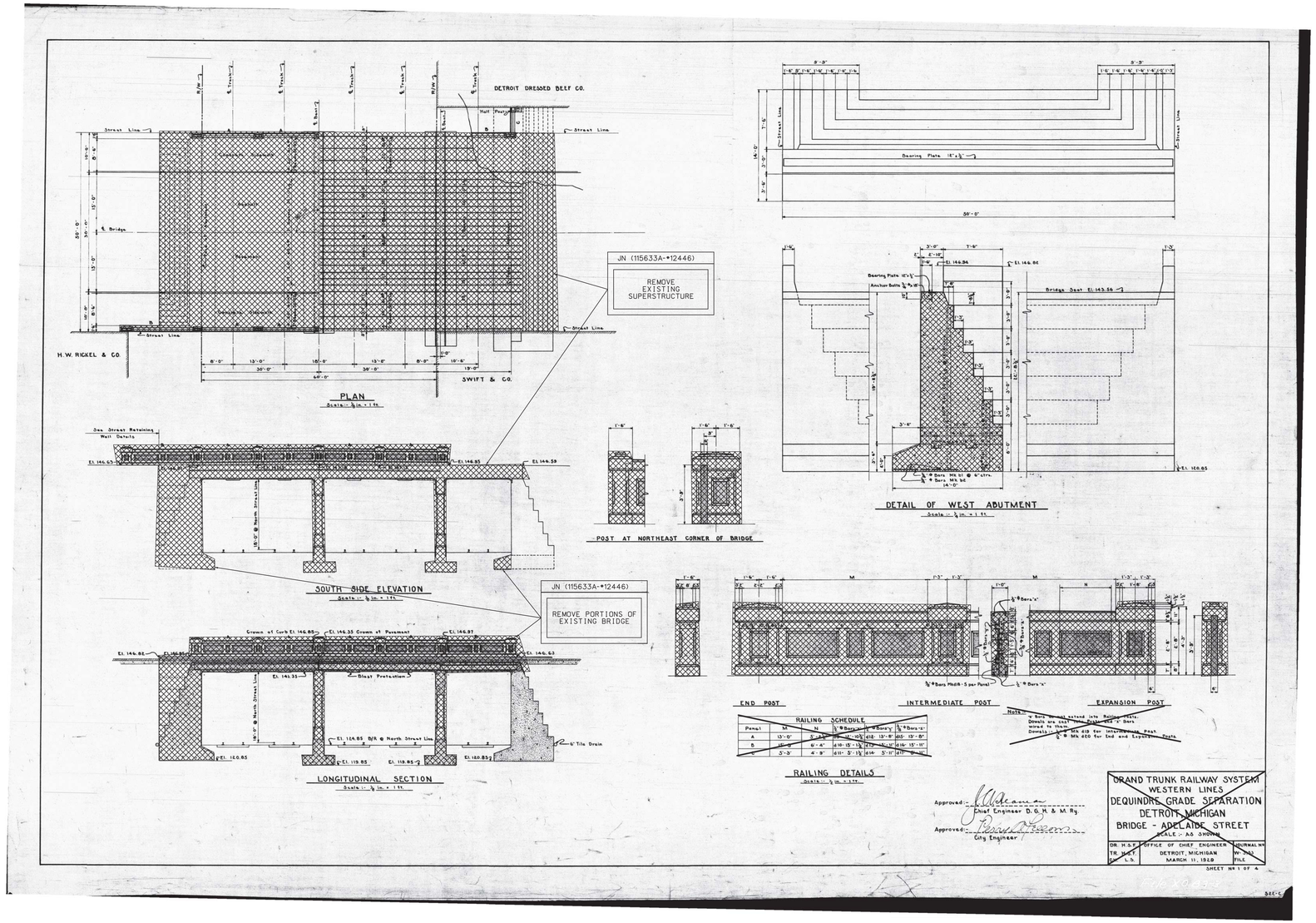

REMOVAL NOTE

JOB NO. (115633A-#12446)

DURING BRIDGE REMOVAL OPERATIONS, CARE SHALL BE TAKEN BY THE CONTRACTOR TO AVOID DAMAGING THE ADJACENT BUILDINGS THAT ARE TO REMAIN. DAMAGE TO THE BUILDINGS CAUSED BY CONTRACTORS REMOVAL OPERATIONS SHAL BE REPAIRED BY THE CONTRACTOR, AT THE CONTRACTORS EXPENSE.

JOB NO. (115633A-#12446)

IT IS UNCERTAIN IF TIMBER PILING EXISTS AT EXISTING BRIDGE. CONTRACTOR SHALL MAKE HIS OWN DETERMINATION IF PILES ARE PRESENT. IF PILES ARE ENCOUNTERED, THEY SHALL BE REMOVED IF THEY INTERFERE WITH PROPOSED PILES. IF EXISTING PILES DO NOT INTERFERE, THEY MAY REMAIN IN PLACE BUT SHALL BE CUT DOWN TO 6'-0" BELOW PROPOSED BOTTOM OF FOOTING. EXISTING PILE REMOVAL SHALL BE PAID FOR AS "PILE, TIMBER, REM".

REMOVAL SHEET

JOB NO. (115633A-#12446)

THE ONLY ITEMS OF WORK TO BE DONE FROM THIS SHEET ARE IDENTIFIED BY USING THE LEGEND BELOW, LABELED WITH THIS PROJECTS JOB NUMBER

PROPOSED WORK

DENOTES REMOVAL PORTIONS

REV #	DATE	DESCRIPTION	BY

NOT VALID FOR CONSTRUCTION UNLESS "SIGNED AND DATED"

WADETRIM
500 Griswold, Suite 2500
Detroit, MI 48226
313.961.1450
FAX 313.961.0898
www.wadetrim.com

Building relationships on a foundation of excellence

CITY OF DETROIT
DEPARTMENT OF PUBLIC WORKS
CITY ENGINEERING DIVISION
ADELAIDE ST. OVER DEQUINDRE CUT S.N. 12446
EXISTING BRIDGE PLANS
REMOVAL SHEET

ISSUED FOR: DATE: BY:

JOB NO. DTE 2025-09T

SHEET 15 (422)

© Wade Trim Group, Inc.

ADELAIDE STREET BRIDGE

PROJECT MANAGER: FIELD BOOK INFORMATION:
C:\pw_work\corporation\d0369048\SDP-PLTS-REMOVAL.dgn
PLOTTED 5/21/2013 11:54:58 AM BY Cornelong

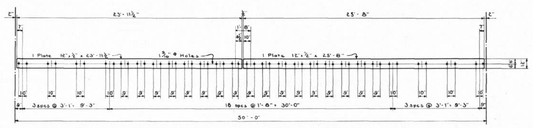

DETAIL FOR ABUTMENT BEARING PLATE

SECTION A-A

BILL OF REINFORCING STEEL

Location	No.	Mk.	Size	Length	Bending Diagram
Bent Footing	54	b1	¾" ⊕	9'-0"	1'-6" 9'-0" 1'-6"
Top Bent Footing Beam	8	b2	¾" ⊕	23'-4"	1'-3" 23'-4"
Bottom Bent Footing Beam	8	b3	1" ⊕	23'-9"	1'-3" 23'-9"
Dowels Bent Column	86	b4	¾" ⊕	8'-6"	Straight
Column Pedestal Abutment	4	b5	1" ⊕	7'-3"	6'-0" 1'-3"
Column Footing Abutment	130	b6	¾" ⊕	8'-6"	Straight
Column Footing Abutment	11	b7	¾" ⊕	7'-6"	Straight
Stirrups Footing Beam	19	b1	½" ⊕	23'-2"	2'-8" 3'-0" 1'-6" 4"
Dowels Abutment	2	b8	¾" ⊕	5'-3"	Straight

MISCELLANEOUS MATERIAL

Item	No.	Size	Length	Description
Bearing Plate	1	14"x½"	23'-8"	See Detail
Bearing Plate	1	14"x½"	23'-11½"	See Detail
Anchor Bolts	50	¾" ⊕	18"	Swedge Bolts with Nuts and Washers

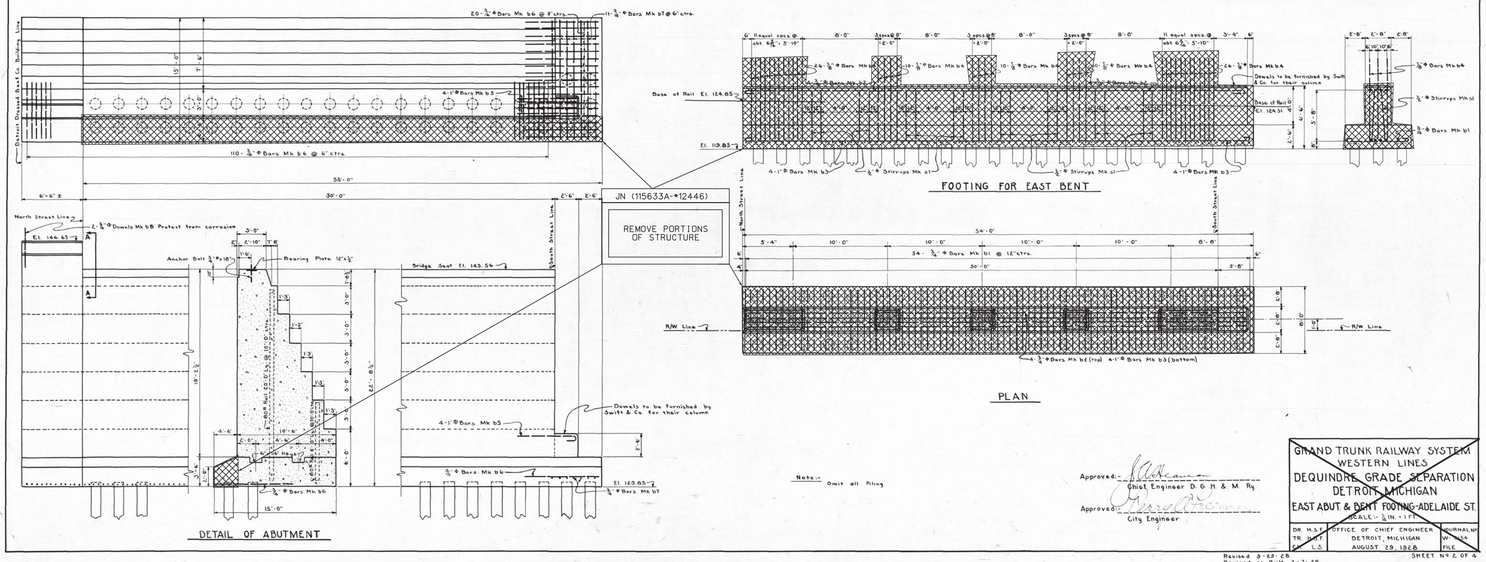

JOB NO. (115633A-#12446)

IT IS UNCERTAIN IF TIMBER PILING EXISTS AT EXISTING BRIDGE. CONTRACTOR SHALL MAKE HIS OWN DETERMINATION IF PILES ARE PRESENT. IF PILES ARE ENCOUNTERED, THEY SHALL BE REMOVED IF THEY INTERFERE WITH PROPOSED PILES. IF EXISTING PILES DO NOT INTERFERE, THEY MAY REMAIN IN PLACE BUT SHALL BE CUT DOWN TO 6'-0" BELOW PROPOSED BOTTOM OF FOOTING. EXISTING PILE REMOVAL SHALL BE PAID FOR AS "PILE, TIMBER, REM."

REMOVAL NOTE

JOB NO. (115633A-#12446)

DURING BRIDGE REMOVAL OPERATIONS, CARE SHALL BE TAKEN BY THE CONTRACTOR TO AVOID DAMAGING THE ADJACENT BUILDINGS THAT ARE TO REMAIN. DAMAGE TO THE BUILDINGS CAUSED BY CONTRACTORS REMOVAL OPERATIONS SHAL BE REPAIRED BY THE CONTRACTOR, AT THE CONTRACTORS EXPENSE.

REMOVAL SHEET

JOB NO. (115633A-#12446)

THE ONLY ITEMS OF WORK TO BE DONE FROM THIS SHEET ARE IDENTIFIED BY USING THE LEGEND BELOW, LABELED WITH THIS PROJECTS JOB NUMBER

PROPOSED WORK

DENOTES REMOVAL PORTIONS

REV #	DATE	DESCRIPTION	BY

NOT VALID FOR CONSTRUCTION UNLESS "SIGNED AND DATED"

WADETRIM
500 Griswold, Suite 2500
Detroit, MI 48226
(313) 961-1450
FAX: 313.961.0898
www.wadetrim.com

Building relationships on a foundation of excellence

CITY OF DETROIT
DEPARTMENT OF PUBLIC WORKS
CITY ENGINEERING DIVISION
ADELAIDE ST. OVER DEQUINDRE CUT S.N. 124446
EXISTING BRIDGE PLANS
REMOVAL SHEET

ISSUED FOR: DATE: BY:

JOB NO. DTE 2025-09T

SHEET 16 (423)

ADELAIDE STREET BRIDGE

© Wade Trim Group, Inc.

PROJECT MANAGER: - FIELD BOOK INFORMATION: -
C:\pw_work\corretjonx\d0369048\SIP-PLS-REMOVAL2.dgn
PLOTTED 5/21/2013 12:02:32 PM BY Corretjonx

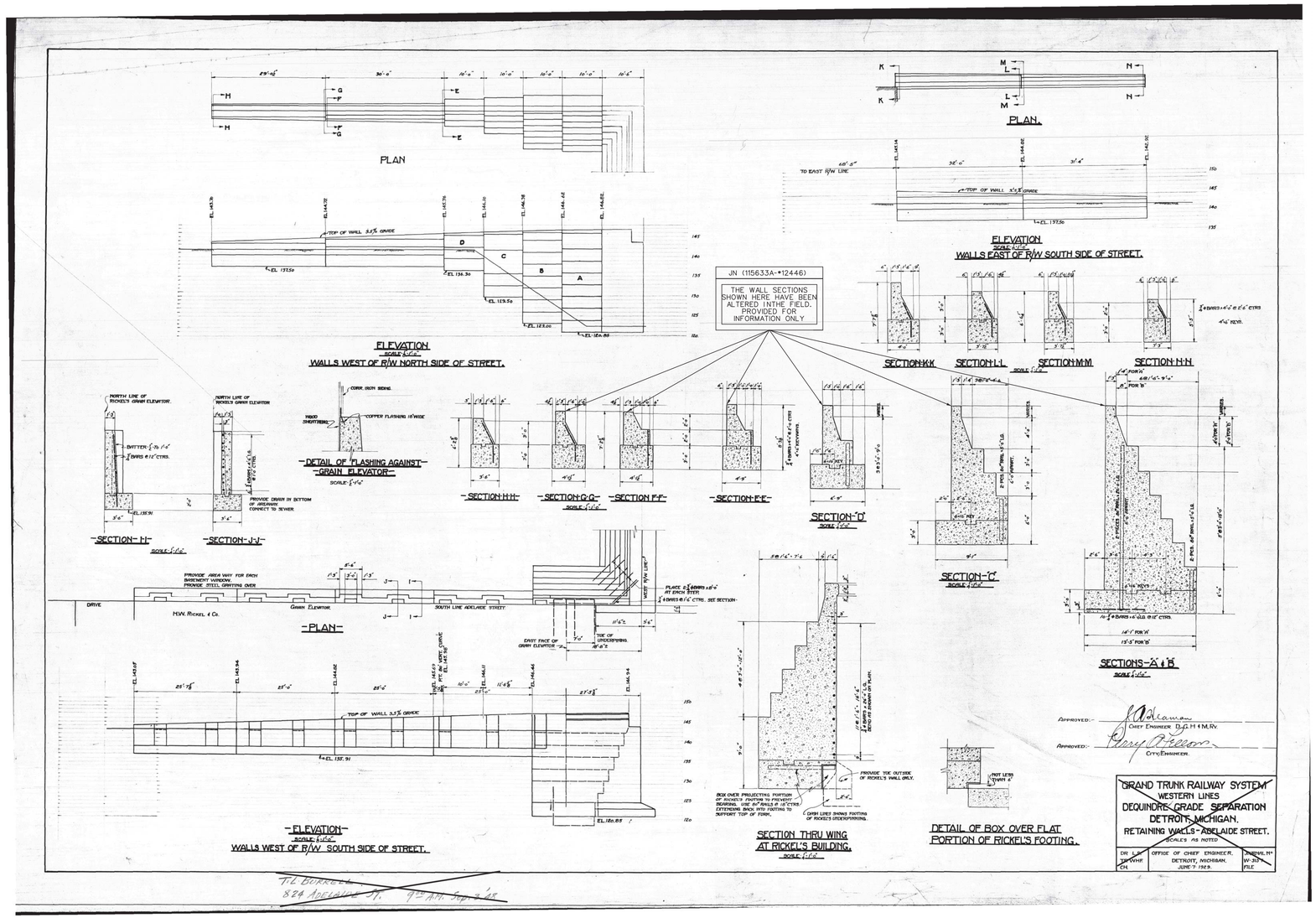

FOR INFORMATION ONLY

EXISTING

JOB NO. (115633A-#12446)

FOR INFORMATION ONLY

DO NOT WORK FROM THIS SHEET. INFORMATION SHOWN HERE IS FOR REFERENCE ONLY. NO PAY ITEMS SHOWN.

REV #	DATE	DESCRIPTION	BY

NOT VALID FOR CONSTRUCTION UNLESS "SIGNED AND DATED"

WADE TRIM

500 Griswold, Suite 2500
Detroit, MI 48226
(313) 961-3650
FAX 313.961.0898
www.wadetrim.com

Building relationships on a foundation of excellence.

CITY OF DETROIT
DEPARTMENT OF PUBLIC WORKS
CITY ENGINEERING DIVISION

ADELAIDE ST. OVER DEQUINDRE CUT S.N. 12446
EXISTING BRIDGE PLANS
REMOVAL SHEET

ISSUED FOR: DATE: BY:

JOB NO. DTE 2025-09T

SHEET 17 (424)

ADELAIDE STREET BRIDGE

© Wade Trim Group, Inc.

PROJECT MANAGER: - FIELD BOOK INFORMATION: -
C:\pw_work\cspowlomo\d0369048\SDP-PLTS-REMOVAL.dgn
PLOTTED 5/21/2013 12:04:59 PM BY Cspowlomo

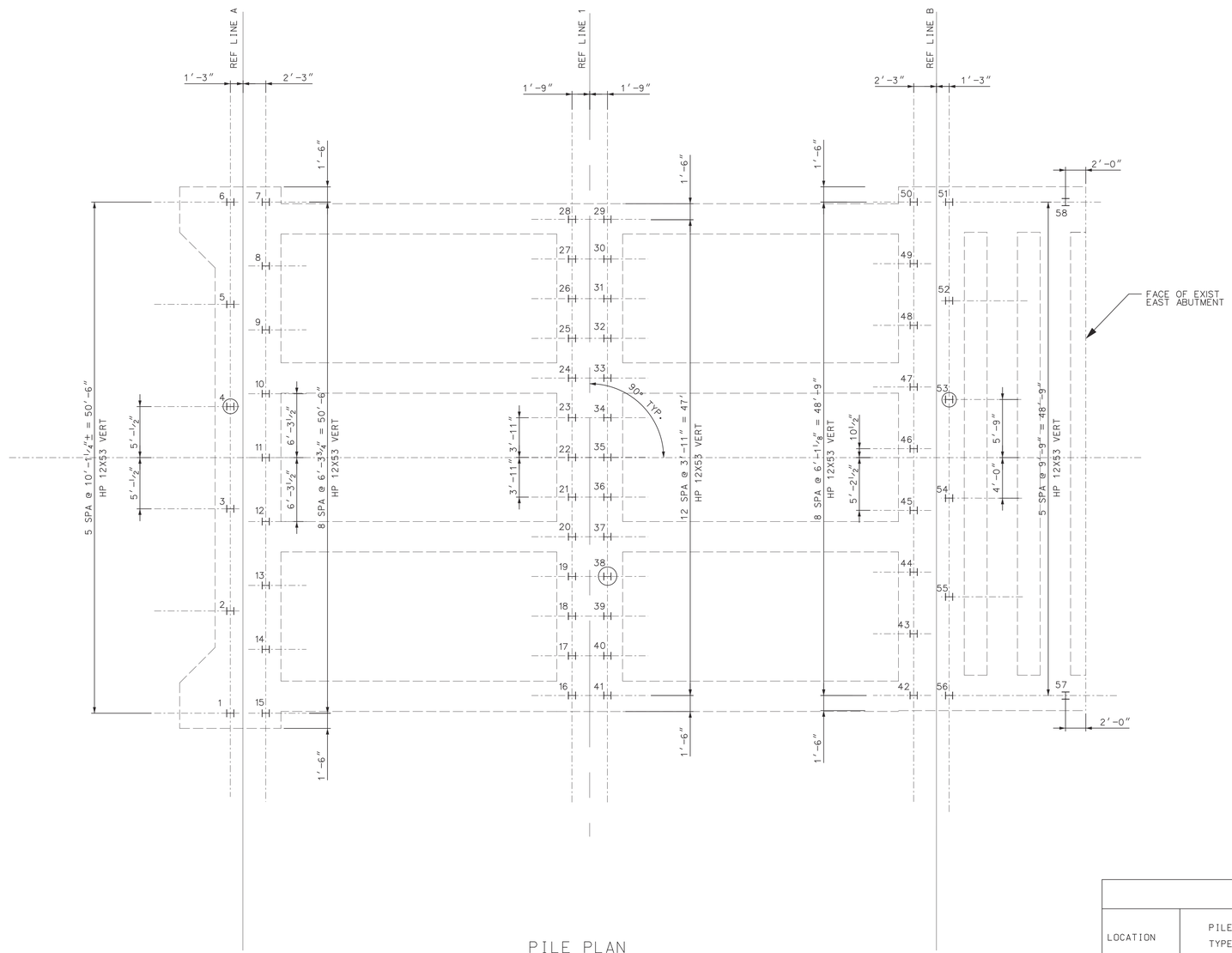

PILE PLAN

NOTES:

DRIVE ALL PILES TO A NOMINAL PILE DRIVING RESISTANCE NOT LESS THAN OF 350 KIPS. NEGLECTING DOWNDRAG (270 KIPS INCLUDING DOWNDRAG). DETERMINE NOMINAL PILE DRIVING RESISTANCE (Rndr) USING DYNAMIC TEST WITH SIGNAL MATCHING (P.D.A. TESTING).

THE ESTIMATED PILE LENGTH IS BASED ON THE STATIC ANALYSIS.

STEEL PILES SHALL BE HP 12X53.

PILES ARE TO BE DRIVEN TO SUCH ACCURACY THAT THE ENDS OF THE PILES TO BE EMBEDDED IN THE CONCRETE ARE WITHIN 3" OF THE LOCATION SHOWN ON THE PLANS.

USE STEEL FOR H-PILES THAT HAVE A YIELD STRENGTH NOT LESS THAN 50,000 PSI.

THE ESTIMATED FACTORED DOWNDRAG AFTER PILE DRIVING IS 80 KIPS. THE REDUCED FACTORED RESISTANCE (Rstat) INCLUDING POTENTIAL FOR DOWNDRAG WITH PDA VERIFICATION IS 175 KIPS

ALL PILES SHALL BE PREBORED TO EL. 103'-0" OR MINIMUM TEN FEET BELOW WATERMAIN INVERT, WHICHEVER IS LOWER. FILL PREBORE WITH FLOWABLE FILL AFTER PILE INSTALLATION.

ALL PILES SHALL BE DRIVEN WITH PROTECTIVE CAST STEEL PILE POINTS. SEE SPECIAL PROVISION FOR DETAILS.

ESTIMATED PILE TIP ELEVATIONS:
-ABUTMENT A = EL. 2.00 FT
-PIER 1 = EL. -3.00 FT
-ABUTMENT B = EL. 2.00 FT

STEEL H-PILES: HP 12X53

LOCATION	PILE TYPE	NUMBER OF PILES	ESTIMATED LENGTH FURNISHED & DRIVEN		PILE POINTS (EACH)	SPLICES (EACH)	CUT-OFF ELEV.
			EACH LFT	TOTAL LFT			
ABUT A	TEST	1	138	138	1		120'-6"
	VERTICAL	14	128	1792	14		120'-6"
PIER 1	TEST	1	137	137	1		120'-6"
	VERTICAL	25	127	3175	25		120'-6"
ABUT B	TEST	1	138	138	1		120'-6"
	VERTICAL	16	128	2048	16		120'-6"
TOTAL				7428	58	186	

MISCELLANEOUS QUANTITIES

986	FT	PREBORE, FDN PILING
1	LS	PILE DRIVING EQUIPMENT, FURN (SN 12446)
7428	FT	PILE, STEEL, FURN AND DRIVEN, 12 INCH
3	EA	TEST PILE, STEEL, 12 INCH
58	EA	PILE POINT, STEEL
1	EA	TEST PILE, FURN DYNAMIC ANALYSIS EQUPIMENT
3	EA	TEST PILE, DYNAMIC ANALYSIS
1	LS	MONITORING VIBRATIONS (SN 12446)
65	CYD	FLOWABLE FILL
186	EA	PILE, STEEL, SPLICE

LEGEND

⊢ --DENOTES VERTICAL PILES.

(⊢) --DENOTES VERTICAL TEST PILES.

REV #	DATE	DESCRIPTION	BY

NOT VALID FOR CONSTRUCTION UNLESS SIGNED AND DATED

WADETRIM
500 Griswold, Suite 2500
Detroit, MI 48226
313.962.7000
FAX: 313.961.0898
www.wadetrim.com

Building relationships on a foundation of excellence.

CITY OF DETROIT
DEPARTMENT OF PUBLIC WORKS
CITY ENGINEERING DIVISION
ADELAIDE ST. OVER DEQUINDRE CUT S.N. 12446
PILING PLAN

ISSUED FOR: DATE: BY:

JOB NO. DTE 2025-09T

SHEET 18 (425)

ADELAIDE STREET BRIDGE

© Wade Trim Group, Inc.

PROJECT MANAGER: -
FIELD BOOK INFORMATION: -
C:\pw_work\cpenetpro\d0369048\CFP-FL15 Pile Plan.dgn
PLOTTED 5/21/2013 12:07:21 PM BY Cpenetpro

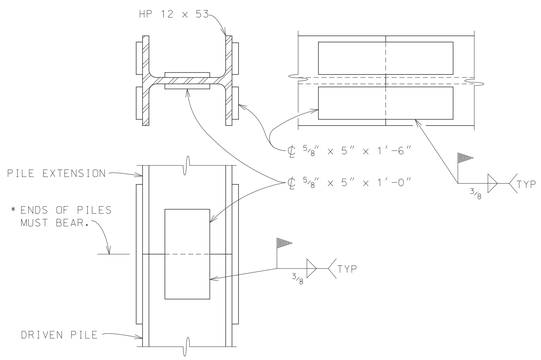

SPLICE DETAILS

* SET PILE EXTENSION IN PLACE WITH SPLICE PLATES ATTACHED. TAP SEVERAL TIMES WITH THE HAMMER TO IMPROVE BEARING CONTACT. THEN COMPLETE WELDING OF PLATES TO THE LOWER SECTION.

WELDED PILE SPLICE - SPLICE PLATES

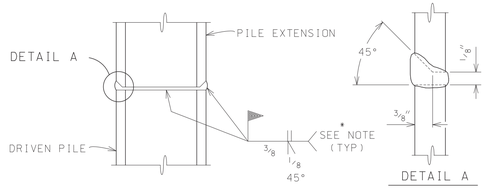

SPLICE DETAILS

FOR PILES IN PLACE (HORIZONTAL JOINT)

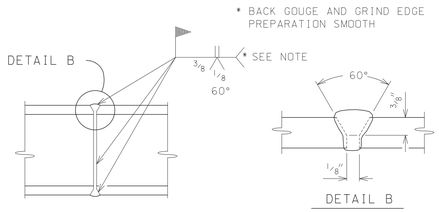

SPLICE DETAILS

FOR PILES IN HORIZONTAL POSITION

WELDED PILE SPLICE - BUTT JOINT

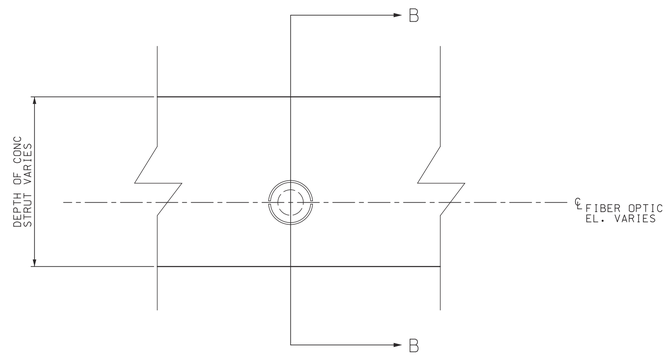

SECTION A-A

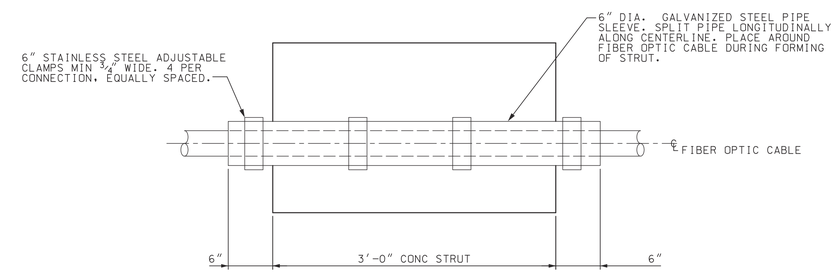

SECTION B-B

FIBER OPTIC CONDUIT DETAIL

CONTRACTOR NOTE:

SEE SPECIAL PROVISION ON FIBER OPTIC COORDINATION AND PROTECTION.

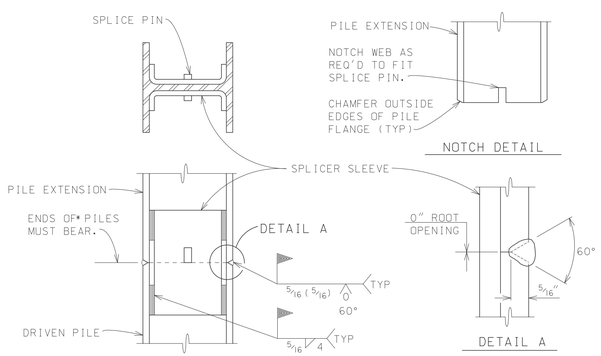

ALTERNATE SPLICE DETAILS

* SET PILE EXTENSION IN PLACE WITH SPLICE PLATES ATTACHED. TAP SEVERAL TIMES WITH THE HAMMER TO IMPROVE BEARING CONTACT. THEN COMPLETE WELDING OF PLATES TO THE LOWER SECTION.

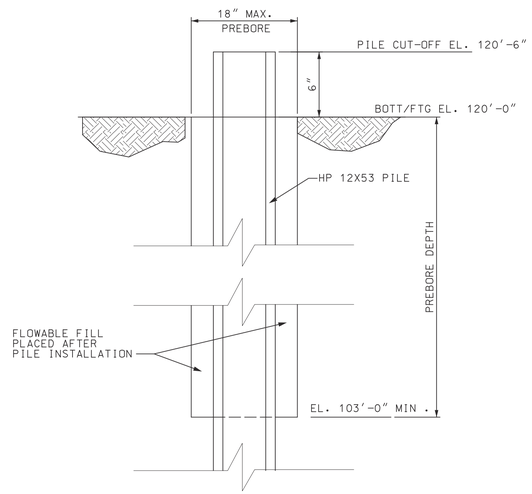

PILE PREBORE DETAIL

REV*	DATE	DESCRIPTION	BY

NOT VALID FOR CONSTRUCTION UNLESS SIGNED AND DATED

WADETRIM

500 Griswold, Suite 2500
Detroit, MI 48226
313.961.1860
FAX: 313.961.0898
www.wadetrim.com

Building relationships on a foundation of excellence.

CITY OF DETROIT
DEPARTMENT OF PUBLIC WORKS
CITY ENGINEERING DIVISION
ADELAIDE ST. OVER DEQUINDRE CUT S.N. 124446
PILE DETAILS

ISSUED FOR: DATE: BY:

JOB NO. DTE 2025-09T

SHEET 19 (426)

ADELAIDE STREET BRIDGE

© Wade Trim Group, Inc.

PROJECT MANAGER: -
FIELD BOOK INFORMATION: -
c:\pw_work\cometona\d0369048\CF-PL13 Pile Details.dgn

PLOTTED 5/21/2013 12:08:17 PM BY Cometona

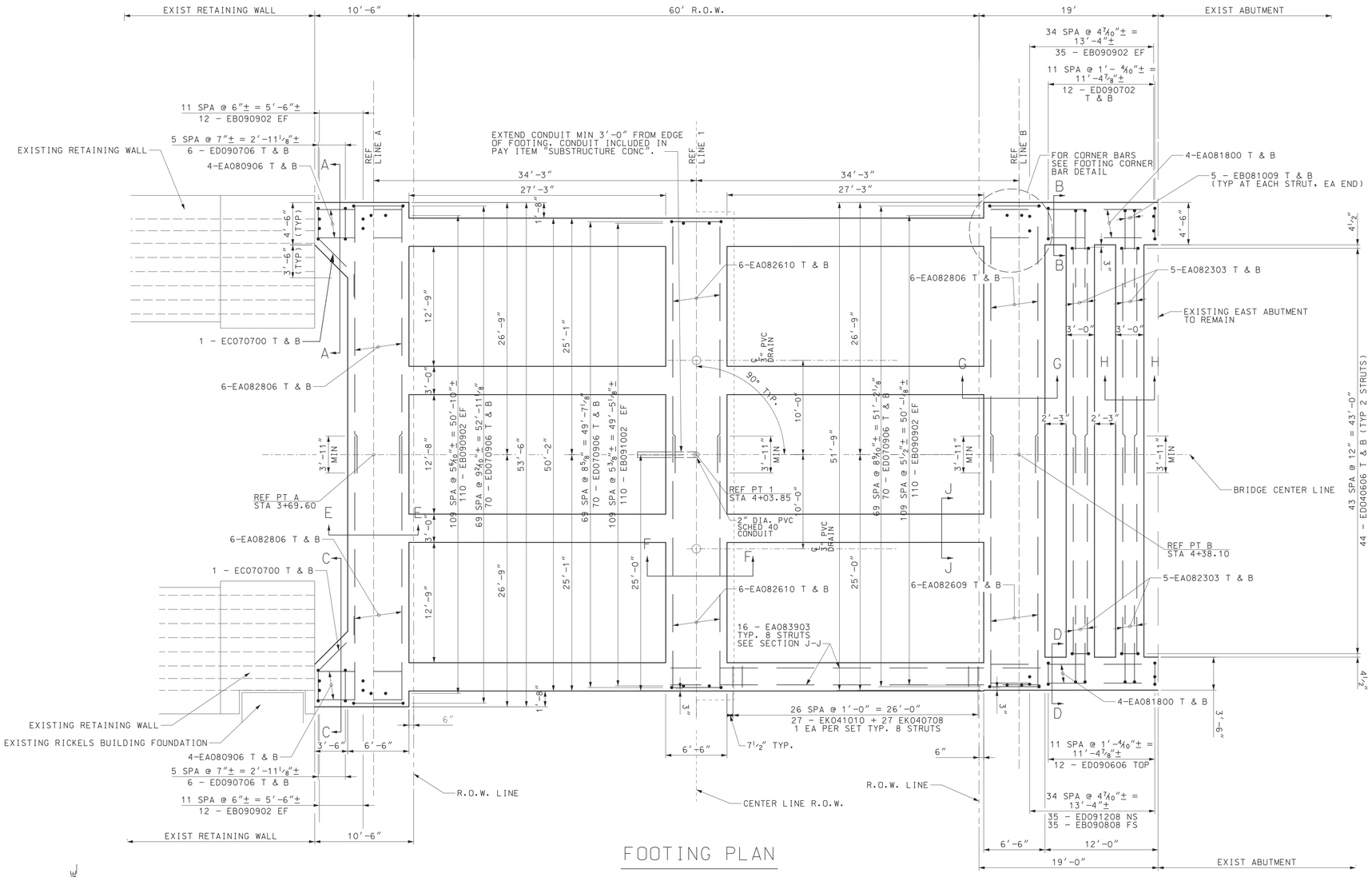

FOOTING PLAN

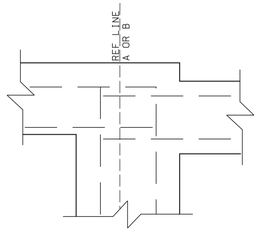

FOOTING PLAN @ CORNER

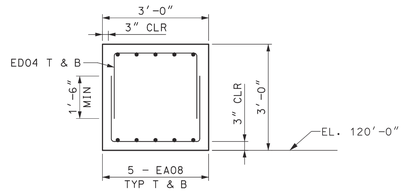

SECTION H-H

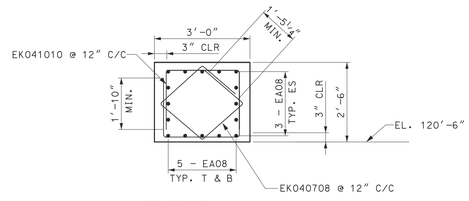

SECTION J-J

FOOTING CONC QUANTITIES		
SUBSTRUCTURE CONC		
LOCATION	QUANTITY	UNIT
ABUT A	75	CYD
PIER 1	37	CYD
ABUT B	110	CYD

NOTES:

CONSTRUCTION JOINTS IN FOOTINGS ARE OPTIONAL.

THE MATERIAL PROPERTIES OF CONCRETE. GRADE S2. SUBFOOTING SHALL BE THOSE OF CONCRETE GRADE S2.

CONCRETE QUANTITIES FOR ABUT A AND ABUT B INCLUDE CONCRETE QUANTITIES FOR TENSION AND COMPRESSION STRUTS.

REV#	DATE	DESCRIPTION	BY

NOT VALID FOR CONSTRUCTION UNLESS SIGNED AND DATED

WADE TRIM
500 Griswold, Suite 2500
Detroit, MI 48226
TEL: 313.962.4085
FAX: 313.961.0898
www.wadetrim.com

Building relationships on a foundation of excellence.

CITY OF DETROIT
DEPARTMENT OF PUBLIC WORKS
CITY ENGINEERING DIVISION
ADELAIDE ST. OVER DEQUINDRE CUT S.N. 12446
FOOTING PLAN

ISSUED FOR: DATE: BY:

JOB NO. DTE 2025-09T

SHEET 20 (427)

ADELAIDE STREET BRIDGE

© Wade Trim Group, Inc.

PLOTTED 5/21/2013 12:10:22 PM BY Cametona

PROJECT MANAGER:- FIELD BOOK INFORMATION:-
G:\pw_work\cametona\d0369048\CF-FPLT5-Footing-Plan.dgn

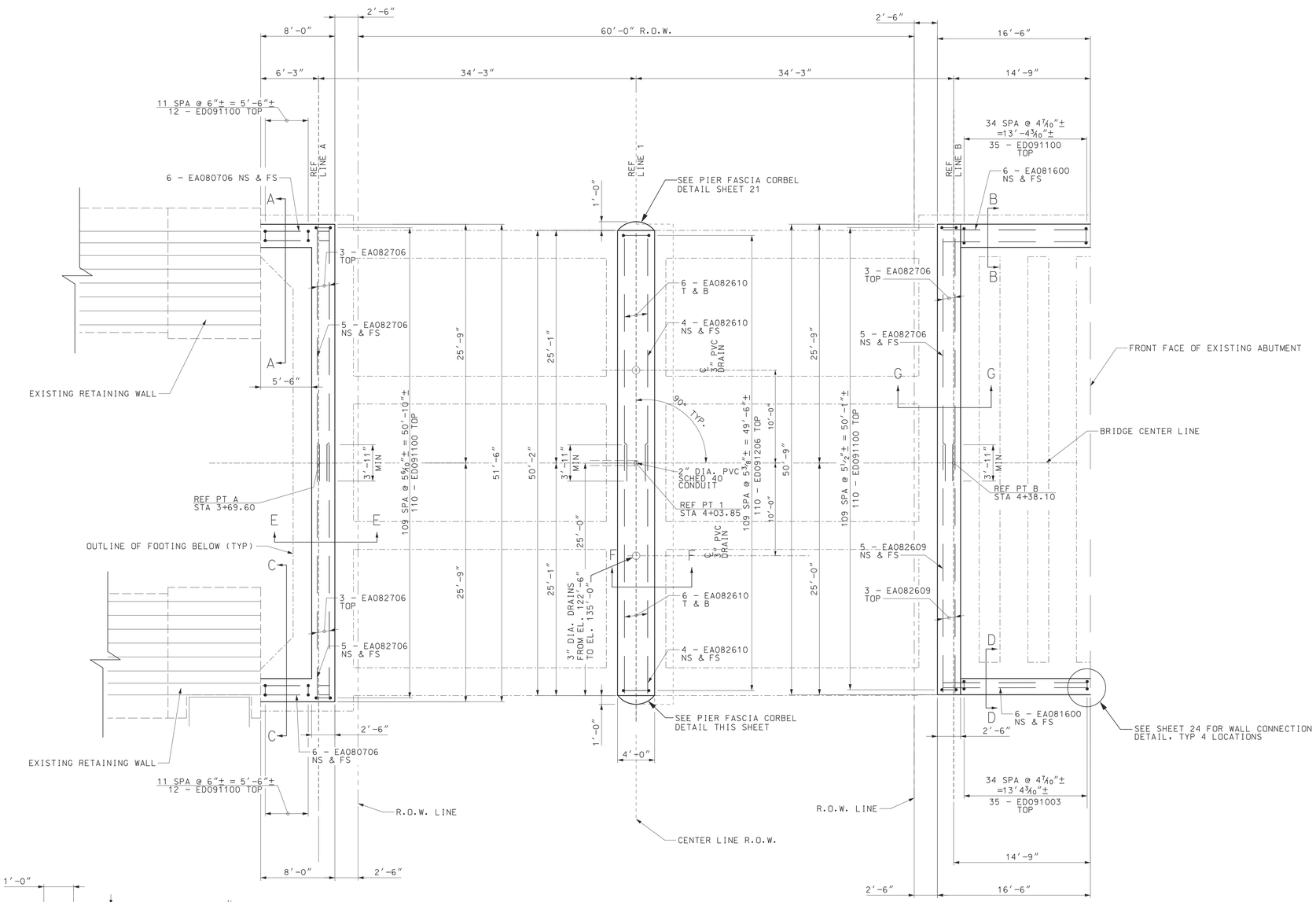

SILL WALL PLAN

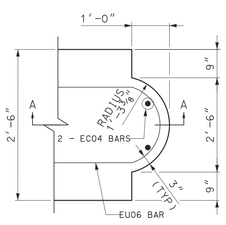

SECTIONAL PLAN

PIER FASCIA CORBEL DETAIL

TYP EACH END OF PIER

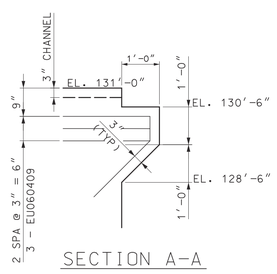

SECTION A-A

SILL WALL CONC QUANTITIES		
SUBSTRUCTURE CONC		
LOCATION	QUANTITY	UNIT
ABUT A	48	CYD
PIER 1	60	CYD
ABUT B	57	CYD

NOTES:

EXTENT OF EXISTING RETURN WALLS UNKNOWN. WALLS SHOWN IN PLAN ARE BASED ON EXISTING 1929 PLANS. CONTRACTOR TO FIELD VERIFY.

CONCRETE SURFACE COATING SHALL BE APPLIED TO THE ENTIRE EXPOSED SURFACES OF THE C.I.P. CONC SILL WALLS. SEE WALL DETAILS FOR EXTENT.

AT NO TIME PRIOR TO ERECTING ARCHES, SHALL THE HEIGHT OF THE BACKFILL ON THE BACKSIDE OF THE ABUTMENTS BE HIGHER THAN THE BACKFILL ON THE FRONT SIDE.

FOR VERTICAL BARS FROM FOOTING INTO SILL WALLS, SEE FOOTING PLAN.

REV #	DATE	DESCRIPTION	BY

NOT VALID FOR CONSTRUCTION UNLESS SIGNED AND DATED

WADETRIM
500 Griswold, Suite 2500
Detroit, MI 48226
T: 313.961.1830
FAX: 313.961.0898
www.wadetrim.com

Building relationships on a foundation of excellence.

CITY OF DETROIT
DEPARTMENT OF PUBLIC WORKS
CITY ENGINEERING DIVISION
ADELAIDE ST. OVER DEQUINDRE CUT S.N. 12446
SILL WALL PLAN

ISSUED FOR: DATE: BY:

JOB NO. DTE 2025-09T

SHEET 21 (428)

ADELAIDE STREET BRIDGE

© Wade Trim Group, Inc.

PROJECT MANAGER: -
FIELD BOOK INFORMATION: -
C:\Pw_work\cameronp\d0369048\CF-PLTS-SHEETS.dgn
PLOTTED 5/21/2013 12:11:28 PM BY Cameronp

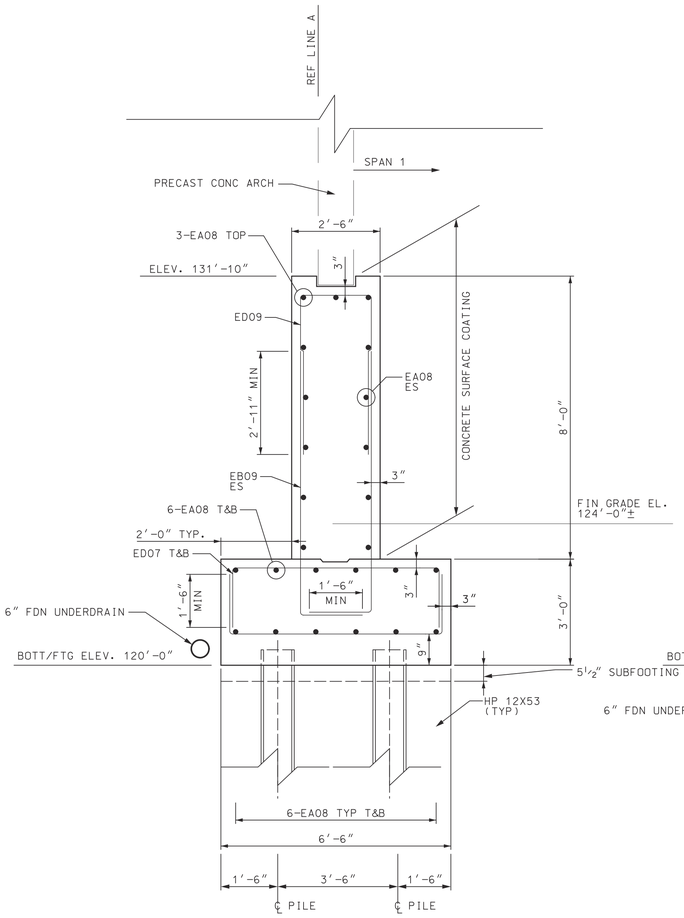

SECTION E-E

SCALE: ½′ = 1′

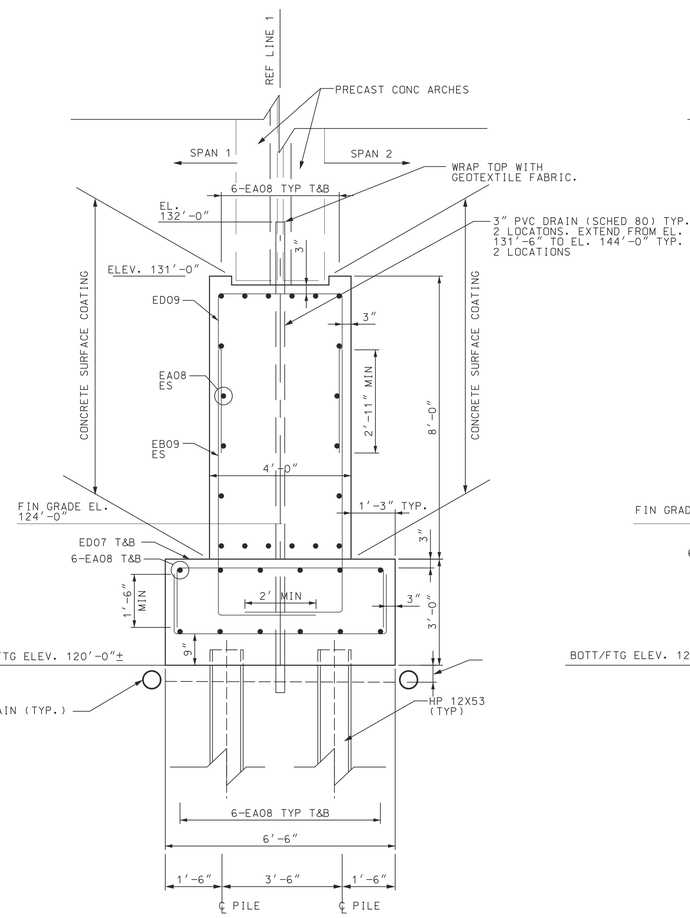

SECTION F-F

SCALE: ½′ = 1′

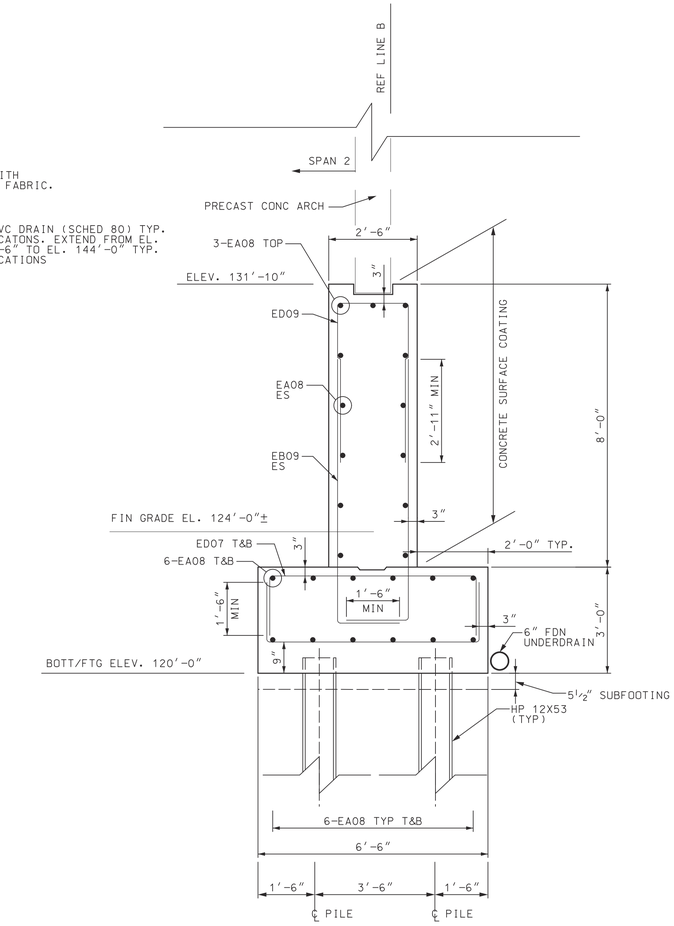

SECTION G-G

SCALE: ½′ = 1′

MISCELLANEOUS QUANTITES

27	CYD	CONC. GRADE S2. SUBFOOTING
387	CYD	SUBSTRUCTURE CONC
456	SYD	CONC SURFACE COATING
200	SFT	STEEL SHEET PILING. TEMP. LEFT-IN-PLACE
414	CYD	CONC. LOW TEMPERATURE PROTECTION
16	EA	PROTECTIVE SLEEVE. FIBER OPTIC LINE

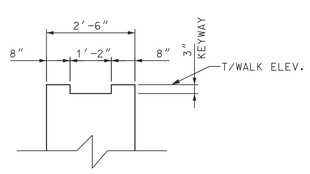

@ ABUTMENT

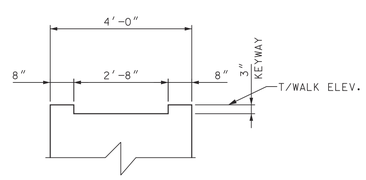

@ PIER

KEYWAY DETAILS

NOTES:

JWP DENOTES JOINT WATERPROOFING.

NS DENOTES NEAR SIDE.

FS DENOTES FAR SIDE.

ES DENOTES EACH SIDE.

FOR BEVEL AND MOLDING DETAILS, SEE STANDARD PLAN B-103-SERIES.

FOR PILE QUANTITIES, LAYOUT AND NOTES SEE SHEETS 18-19.

LOW TEMPERATURE PROTECTION OF CONCRETE SHALL BE APPLIED ACCORDING TO SECTION 706.03 J. OF THE STANDARD SPECIFICATIONS FOR CONSTRUCTION. LOW TEMPERATURE PROTECTION OF CONCRETE WILL NOT BE PAID FOR SEPARATELY, BUT WILL BE INCLUDED IN THE BID ITEM "SUBSTRUCTURE CONC".

SEE DETAILS, SHEETS 23-24 FOR LIMITS OF TEMPORARY SHEETING.

SEE SPECIAL PROVISION FOR CONC SURFACE COATING

PVC DRAINS AT PIER FOUNDATIONS SHALL BE 3" DIA. SCHEDULE 80 PPIPE. IT SHALL BE INCLUDED IN THE PAY ITEM "SUBSTRUCTURE CONC".

REV #	DATE	DESCRIPTION	BY

NOT VALID FOR CONSTRUCTION UNLESS SIGNED AND DATED

WADETRIM
500 Griswold, Suite 2500
Detroit, MI 48226
313.961.9525
FAX: 313.961.0898
www.wadetrim.com

Building relationships on a foundation of excellence

CITY OF DETROIT
DEPARTMENT OF PUBLIC WORKS
CITY ENGINEERING DIVISION
ADELAIDE ST. OVER DEQUINDRE CUT S.N. 124446
SILL WALL DETAILS

ISSUED FOR: DATE: BY:

JOB NO. DTE 2025-09T

SHEET 22 (429)

ADELAIDE STREET BRIDGE

© Wade Trim Group, Inc.

PROJECT MANAGER: - FIELD BOOK INFORMATION: -
c:\pw_work\cornetona\d0360948\CSP-PLTS-sillwalltypes-3.dgn
PLOTTED 5/21/2013 12:12:58 PM BY Cornetona

NOTES

FOR DETAILS OF TEXTURING CONCRETE @ BRIDGE RAILINGS. SEE SHEET 25.

A RUBBED SURFACE FINISH ON THE VERTICAL OUTSIDE SURFACES OF THE PRECAST WALLS IS REQUIRED FOR THIS STRUCTURE.

SEE SPECIAL PROVISIONS FOR CONCRETE SURFACE COATING.

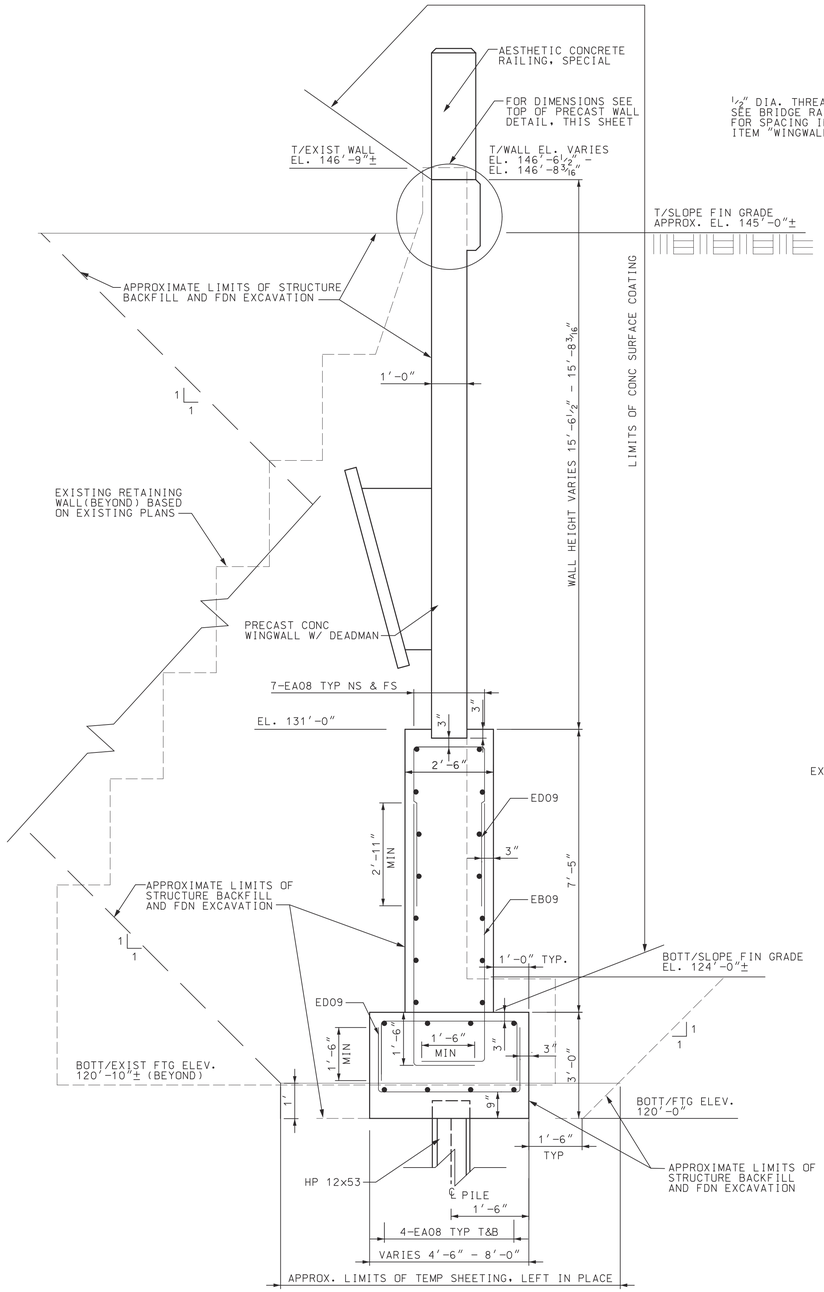

SECTION A-A

SCALE: ½' = 1'

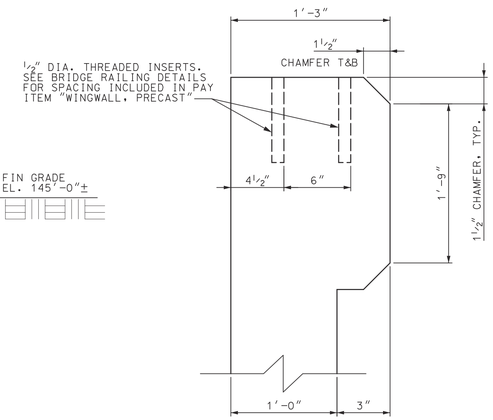

TOP OF PRECAST WALL DETAIL

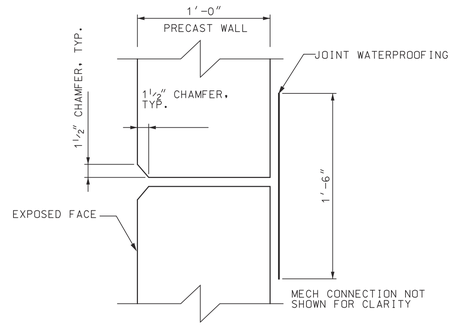

VERTICAL WALL JOINT DETAIL

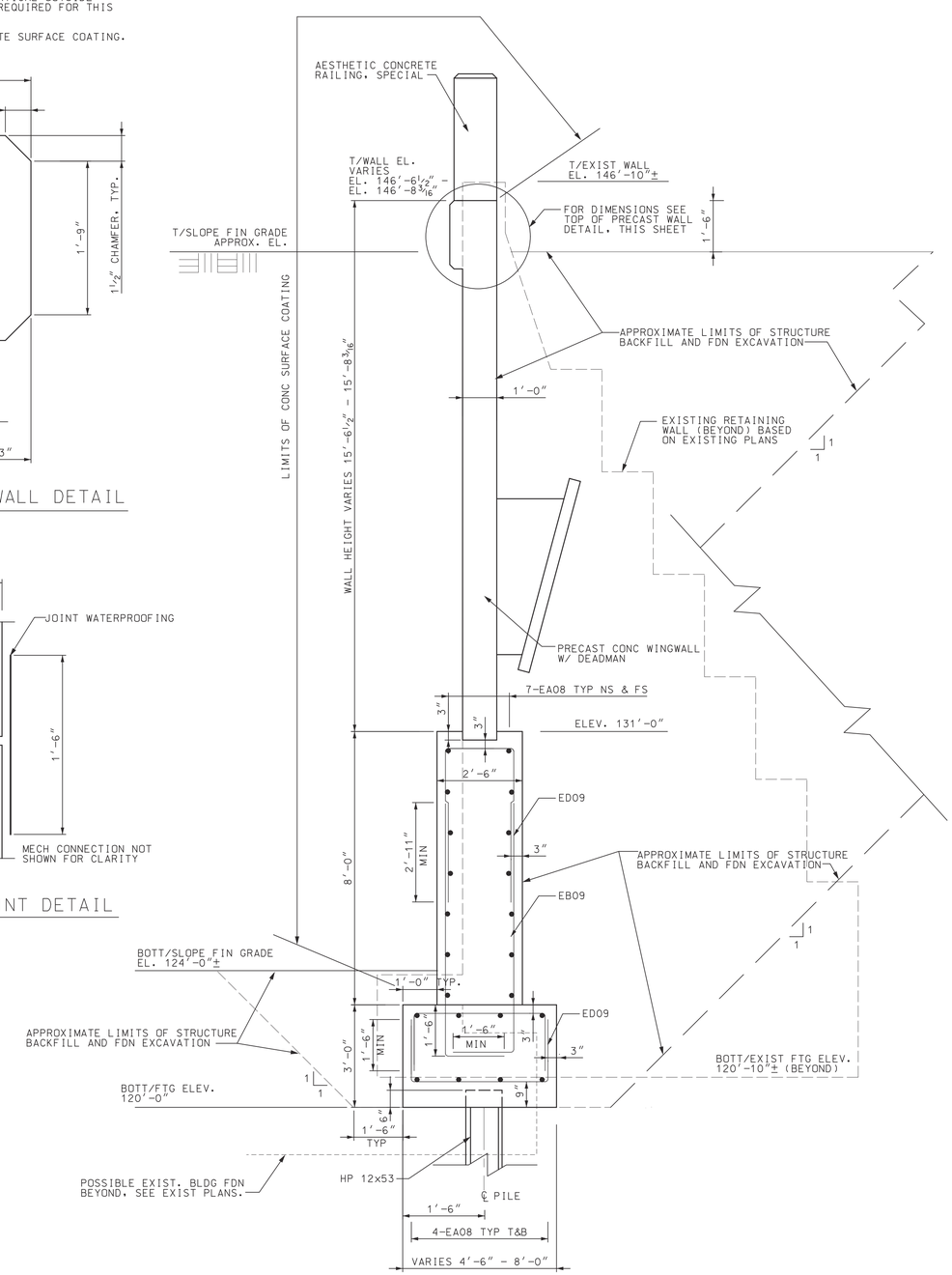

SECTION C-C

SCALE: ½' = 1'

REV#	DATE	DESCRIPTION	BY

NOT VALID FOR CONSTRUCTION UNLESS SIGNED AND DATED

WADETRIM
500 Griswold, Suite 2500
Detroit, MI 48226
313.961.3650
FAX 313.961.0898
www.wadetrim.com

Building relationships on a foundation of excellence

CITY OF DETROIT
DEPARTMENT OF PUBLIC WORKS
CITY ENGINEERING DIVISION
ADELAIDE ST. OVER DEQUINDRE CUT S.N. 12446
WINGWALL DETAILS

ISSUED FOR: DATE: BY:

JOB NO. DTE 2025-09T

SHEET 23 (430)

ADELAIDE STREET BRIDGE

© Wade Trim Group, Inc.

PROJECT MANAGER: FIELD BOOK INFORMATION: -
c:\pw_work\corporation\d0369048\CWP-PLTS-wpdbplotsheet-1.dgn
PLOTTED 5/21/2013 12:14:25 PM BY Corretona

NOTES

FOR DETAILS OF TEXTURING CONCRETE @ BRIDGE RAILINGS, SEE SHEET 26.

A RUBBED SURFACE FINISH ON THE VERTICAL OUTSIDE SURFACES OF THE PRECAST WALLS IS REQUIRED FOR THIS STRUCTURE.

SEE SPECIAL PROVISIONS FOR CONCRETE SURFACE COATING.

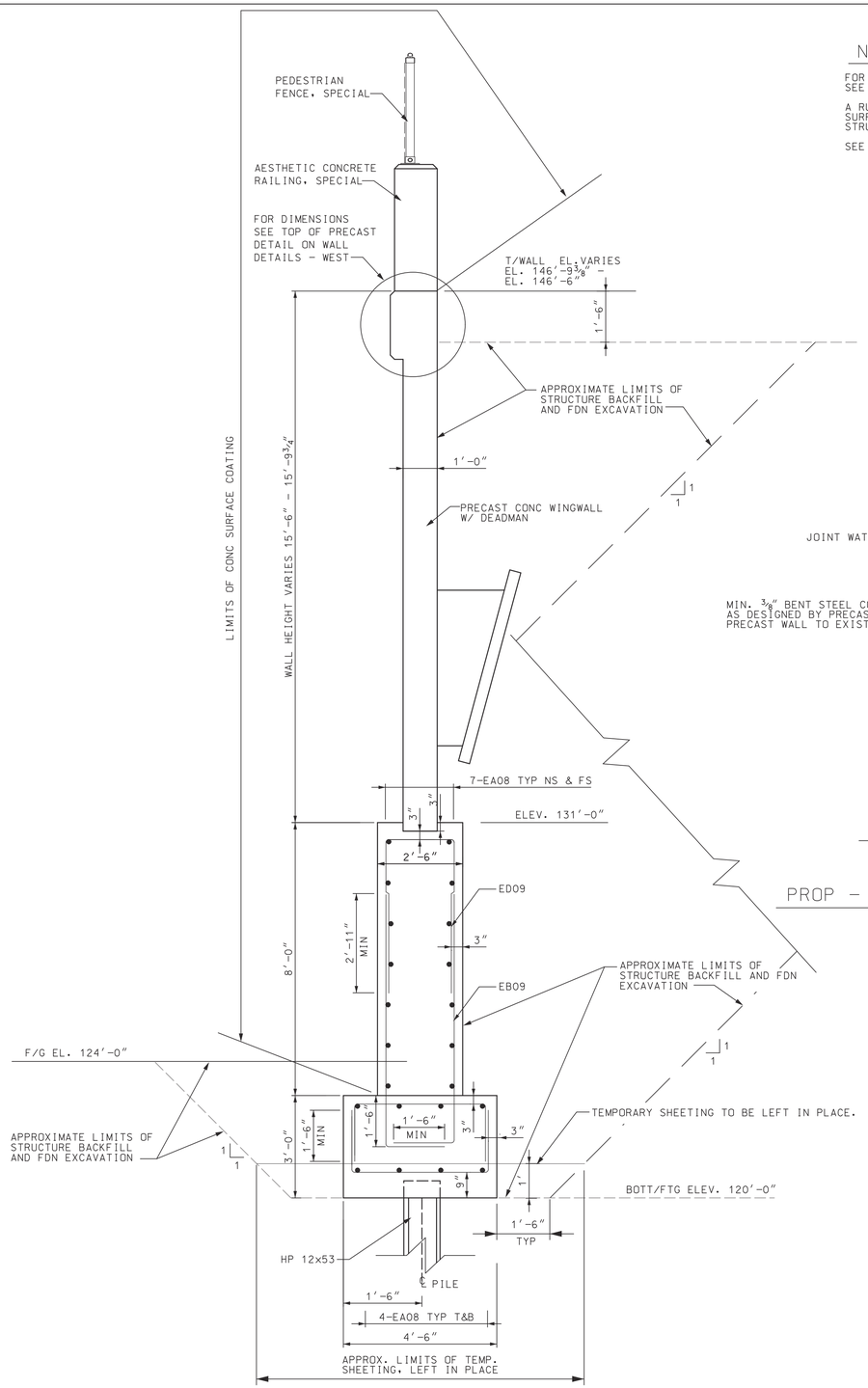

SECTION B-B

SCALE: 1/2" = 1'

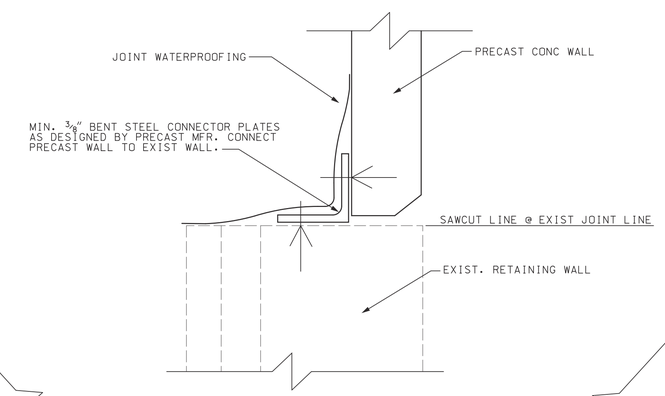

PROP - EXIST WALL CONNECTION DETAIL

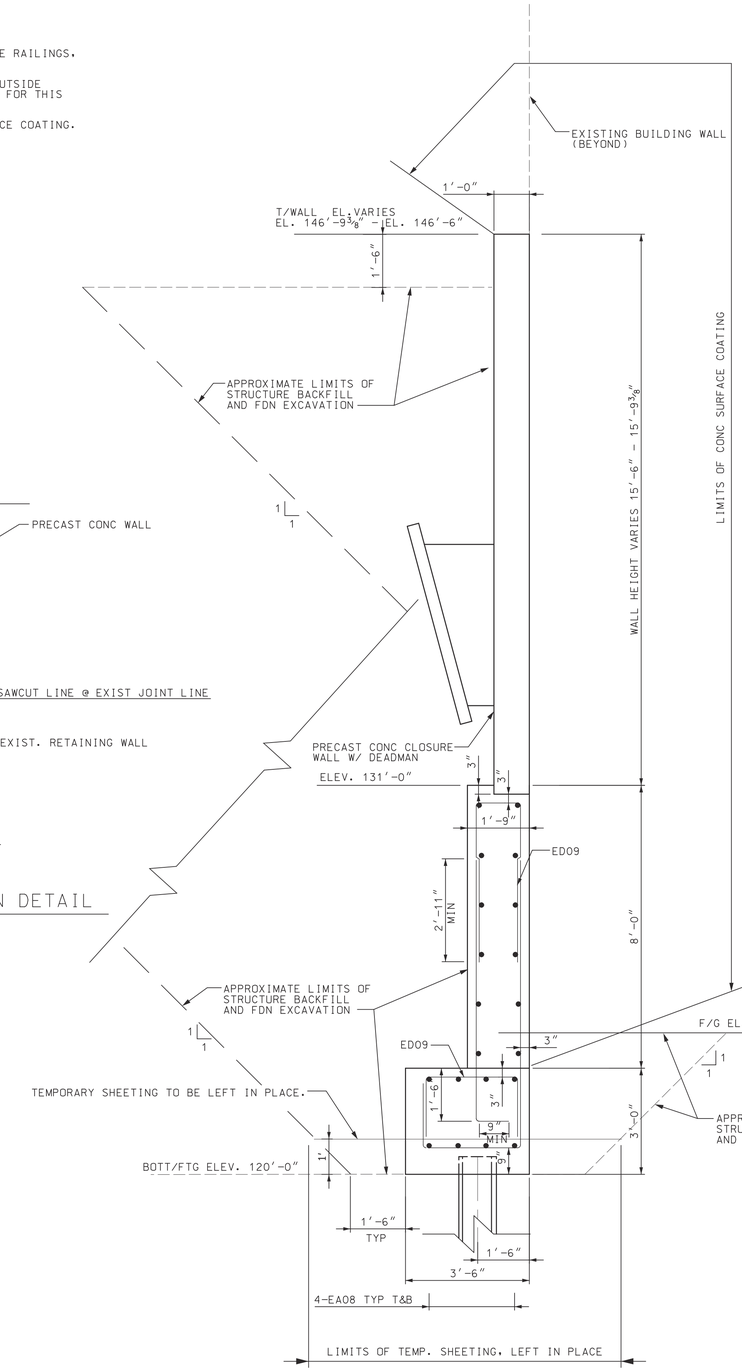

SECTION D-D

SCALE: 1/2" = 1'

REV#	DATE	DESCRIPTION	BY

NOT VALID FOR CONSTRUCTION UNLESS SIGNED AND DATED

WADETRIM
500 Griswold, Suite 2500
Detroit, MI 48226
313.961.3650
FAX: 313.961.0898
www.wadetrim.com

Building relationships on a foundation of excellence

CITY OF DETROIT
DEPARTMENT OF PUBLIC WORKS
CITY ENGINEERING DIVISION
ADELAIDE ST. OVER DEQUINDRE CUT S.N. 12446
WINGWALL DETAILS

ISSUED FOR: DATE: BY:

JOB NO. DTE 2025-09T

SHEET 24 (431)

ADELAIDE STREET BRIDGE

© Wade Trim Group, Inc.

PROJECT MANAGER: -
FIELD BOOK INFORMATION: -
C:\pw_work\corretjonv\d0360948\CWP-PLTS.wpl\proposed-sst-1-2.dgn
PLOTTED 5/21/2013 12:15:42 PM BY Corretjonv

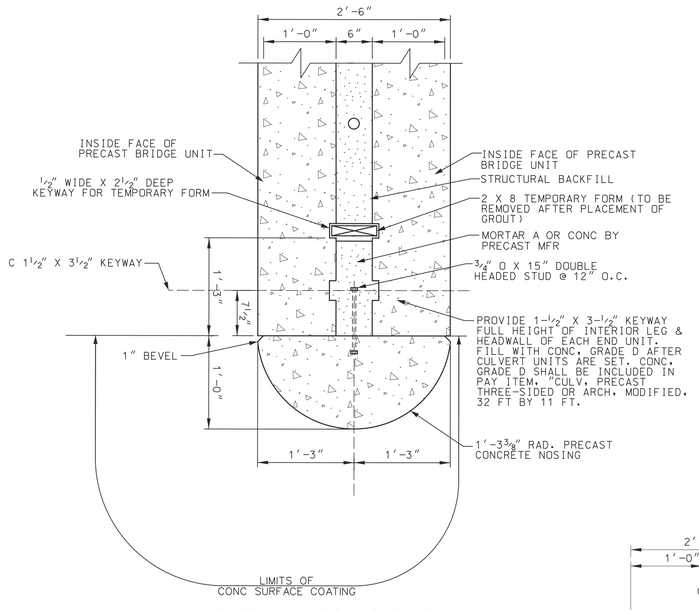

PIER FASCIA DETAIL

SEE DEQUINDRE CUT ELECTRICAL DRAWINGS FOR UNDERBRIDGE LIGHTING DIAGRAMS

MISCELLANEOUS QUANTITIES

100	FT	CULV, PRECAST THREE-SIDED OR ARCH, MODIFIED 32 FOOT BY 11 FOOT
650	SFT	WINGWALL, PRECAST
1085	SFT	JOINT WATERPROOFING
70	SFT	CONC SURFACE COATING

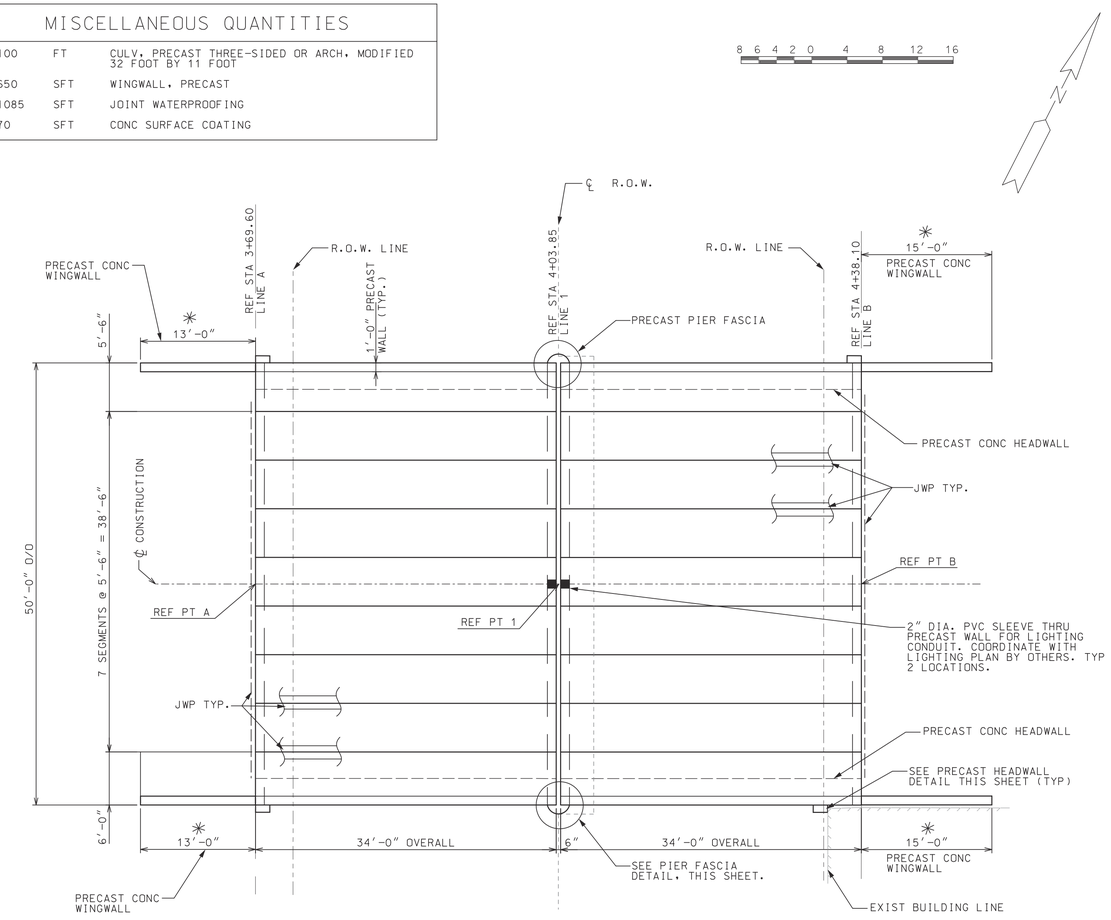

PRECAST ARCH LAYOUT PLAN

* CONTRACTOR TO FIELD VERIFY PRECAST WALL LENGTHS PRIOR TO FABRICATION.

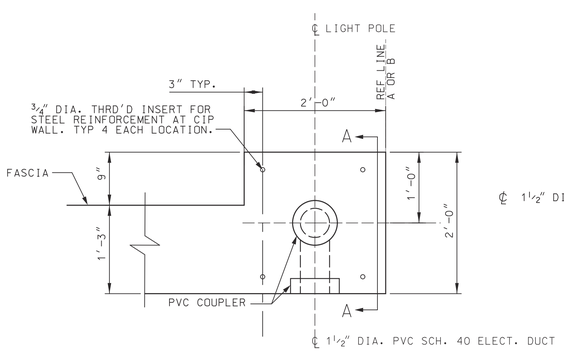

PRECAST HEADWALL DETAIL

(TYP. 4 CORNERS)

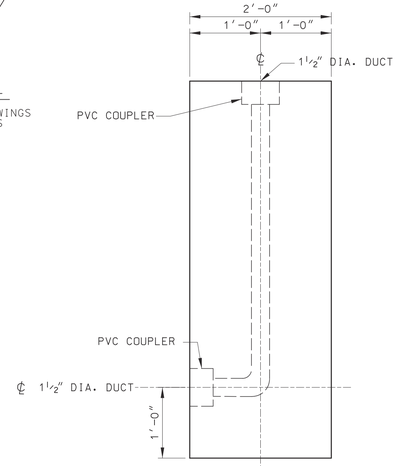

SECTION A-A

TOP/HEADWALL ELEVATIONS

LOCATION	REF LINE	ELEV (DCD)
NORTH HEADWALL	'A'	146.67
	'1'	147.01
	'B'	146.78
SOUTH HEADWALL	'A'	146.67
	'1'	147.01
	'B'	146.78

NOTES:

JWP DENOTES JOINT WATERPROOFING

FOR DETAILS OF NAME PLATES, MOLDINGS AND BEVELS, SEE STD PLAN B-103 SERIES.

FOR NAME PLATE LOCATION, SEE GENERAL PLAN OF STRUCTURE SHEET.

A RUBBED SURFACE FINISH ON THE VERTICAL OUTSIDE SURFACE OF THE PRECAST CONC HEADWALLS IS REQUIRED ON THIS STRUCTURE.

COORDINATE LOCATION OF 1 1/2" DIA. PVC CONDUIT @ HEADWALLS WITH RAILING DETAILS ON SHEET 26.

PRECAST PIER FASCIA SHALL BE INCLUDED IN THE PAY ITEM "CULV, PRECAST THREE-SIDED OR ARCH, MODIFIED , 32 FT BY 11 FT.

PRECAST CONC HEADWALL IS INCLUDED IN PAY ITEM "CULV, PRECAST THREE-SIDED OR ARCH, MODIFIED, 32 FT BY 11 FT. ESTIMATED TOTAL LENGTH = 137 FT.

ALL PRECAST ELEMENTS SHALL HAVE 28 DAY STRENGTH f'c = 5,000 PSI MINIMUM.

DESCRIPTION	DEAD LOAD	LIVE LOAD	TOTAL LOAD
RH (HORIZ)	2.9 K/FT	2.7 K/FT	5.6 K/FT
RV (VERT)	17.1 K/FT	6.4 K/FT	23.5 K/FT

REACTION NOTES:

REACTIONS SHOWN ARE UNFACTORED LOADS.

LIVE LOAD REACTIONS SHOWN ARE MAXIMUM REACTION BASED ON VARYING AXLE LOAD POSITIONS.

IMPACT IS NOT INCLUDED.

DEAD LOAD REACTIONS INCLUDE PRECAST UNIT AND WEIGHT OF SOIL AT A UNIT WEIGHT OF 120 PCF.

PRIOR TO START OF CONSTRUCTION, CONTRACTOR SHALL PROVIDE ENGINEER WITH REACTIONS FROM PRECAST MANUFACTURER FOR PROJECT. THE REACTIONS SHALL BE REVIEWED BY THE ENGINEER PRIOR TO PRECAST FABRICATION.

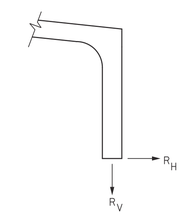

PRECAST ARCH REACTIONS

REV#	DATE	DESCRIPTION	BY

NOT VALID FOR CONSTRUCTION UNLESS SIGNED AND DATED

WADETRIM

500 Griswold, Suite 2500
Detroit, MI 48226
(313) 961-3650
FAX: 313 961 0898
www.wadetrim.com

Building relationships on a foundation of excellence.

CITY OF DETROIT
DEPARTMENT OF PUBLIC WORKS
CITY ENGINEERING DIVISION
ADELAIDE ST. OVER DEQUINDRE CUT S.N. 12446
PRECAST CONCRETE PLAN & DETAILS

ISSUED FOR: DATE: BY:

JOB NO. DTE 2025-09T

SHEET 25 (432)

ADELAIDE STREET BRIDGE

© Wade Trim Group, Inc.

PLOTTED 5/21/2013 12:17:24 PM BY Cometona

PROJECT MANAGER: - FIELD BOOK INFORMATION: -
C:\pw_work\cometona\d0360948\CIP-PLS-PrecastPlan.dgn

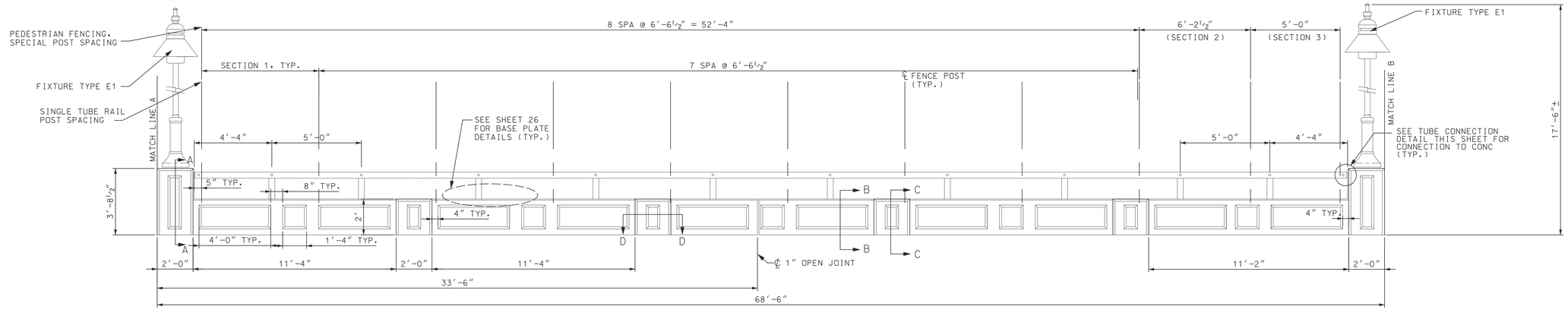

NORTH ELEVATION VIEW

NO SCALE

NOTE:
VIEW FROM CENTERLINE OF ROAD LOOKING AT INNER FACE OF RAILING.

TEXTURED CONCRETE SURFACE TYP. BOTH SIDES OF RAILING

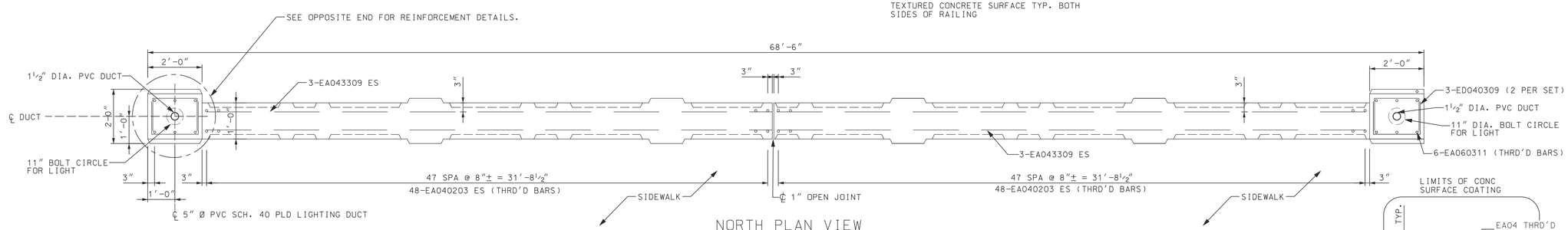

NORTH PLAN VIEW

NO SCALE

NOTE:
AESTHETIC PARAPET TUBE NOT SHOWN FOR CLARITY

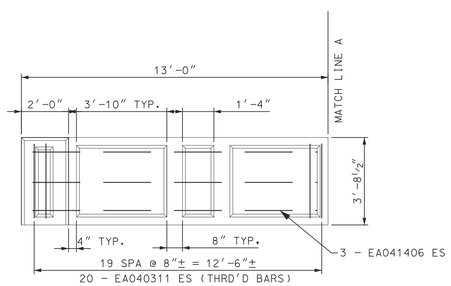

NW QUADRANT

TEXTURED CONCRETE SURFACE TYP. BOTH SIDES OF RAILING

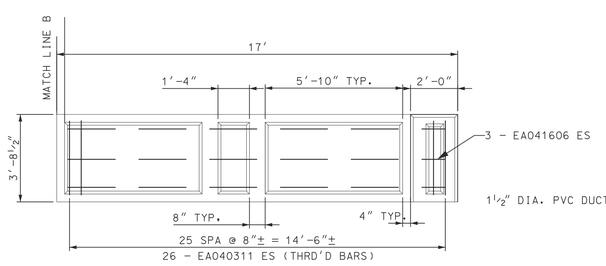

NE QUADRANT

TEXTURED CONCRETE SURFACE TYP. BOTH SIDES OF RAILING

MISCELLANEOUS QUANTITIES	
137 FT	BRIDGE RAILING, AESTHETIC PARAPET TUBE, DETAIL 2, MODIFIED
43 FT	AESTHETIC CONCRETE RAIL, SPECIAL
127 SYD	TEXTURING CONC
822 SFT	PEDESTRIAN FENCE, SPECIAL

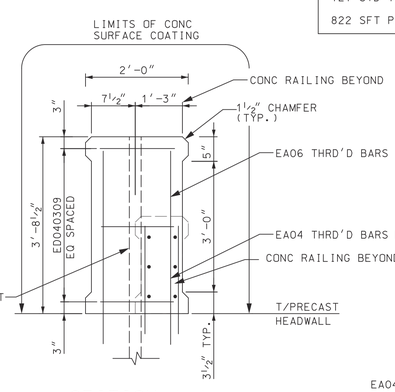

SECTION A-A

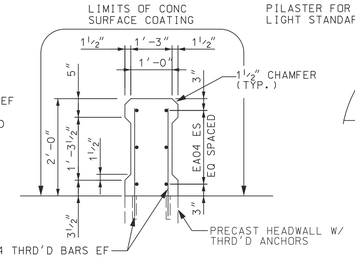

SECTION B-B

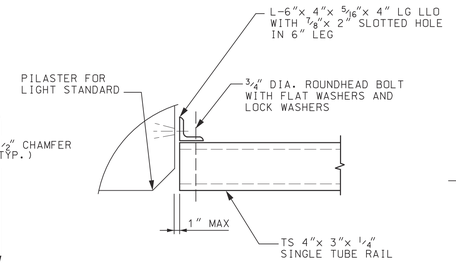

TUBE CONNECION DETAIL

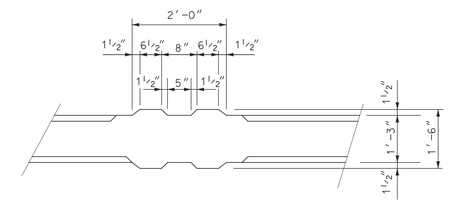

SECTION D-D

SECTION C-C

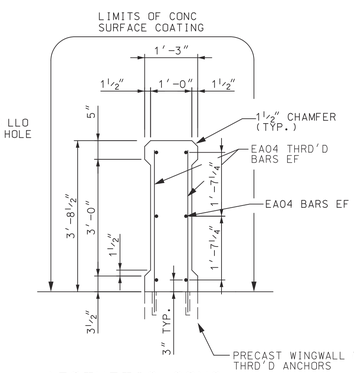

AESTHETIC CONC RAILING, SPECIAL - DETAIL

WORK THIS SHEET WITH SHEETS 26-27

REV #	DATE	DESCRIPTION	BY

NOT VALID FOR CONSTRUCTION UNLESS SIGNED AND DATED

WADETRIM
500 Griswold, Suite 2500
Detroit, MI 48226
313.961.1860
FAX: 313.961.0898
www.wadetrim.com

Building relationships on a foundation of excellence.

CITY OF DETROIT
DEPARTMENT OF PUBLIC WORKS
CITY ENGINEERING DIVISION
ADELAIDE ST. OVER DEQUINDRE CUT S.N. 12446
SUPERSTRUCTURE DETAILS

ISSUED FOR: DATE: BY:

JOB NO. DTE 2025-09T

SHEET 26 (433)

ADELAIDE STREET BRIDGE

© Wade Trim Group, Inc.

PROJECT MANAGER: - FIELD BOOK INFORMATION -
c:\pw_work\cometona\d0369048\CBP-FL1S-Railing4plus50feet.dgn

PLOTTED 5/21/2013 12:20:53 PM BY Cometona

FENCE POST SPACING ON BRIDGE			
	LENGTH		
SECTION	A	B	C
1	6′-3 1/4″	5′-8 1/2″	2′-5 7/8″
2	5′-2 1/4″	4′-7 3/4″	1′-11 3/8″
3	5′-10 1/4″	5′-3 3/4″	2′-3 3/8″

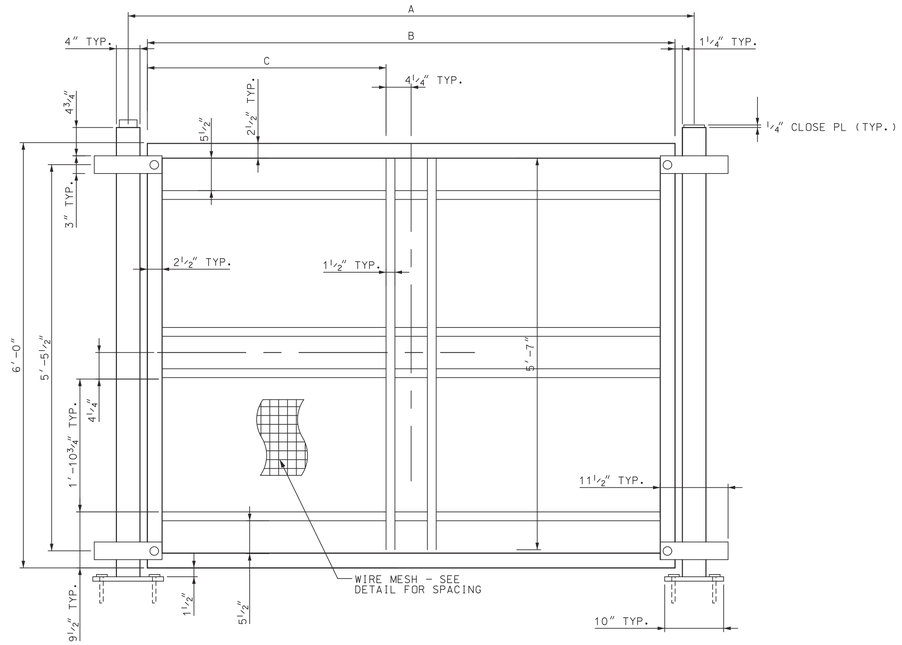

TYPICAL FENCE PANEL SECTION ON BRIDGE

ALL SECTION TO BE PAINTED BLACK

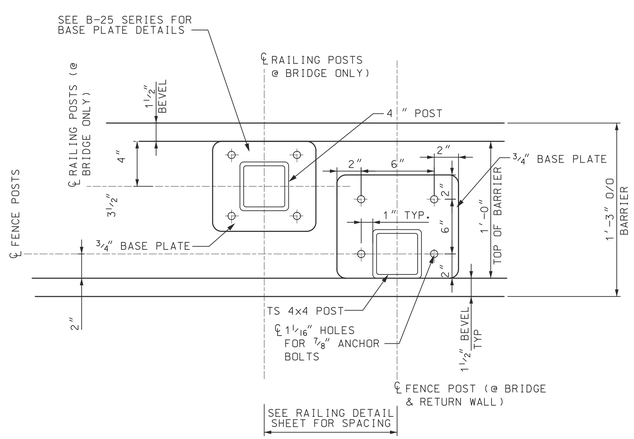

POST BASE PLATE DETAILS

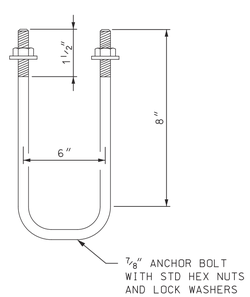

FENCE POST ANCHOR BOLT DETAIL

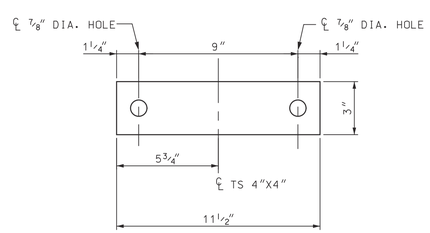

FENCE PANEL CONNECTION PLATE DETAIL

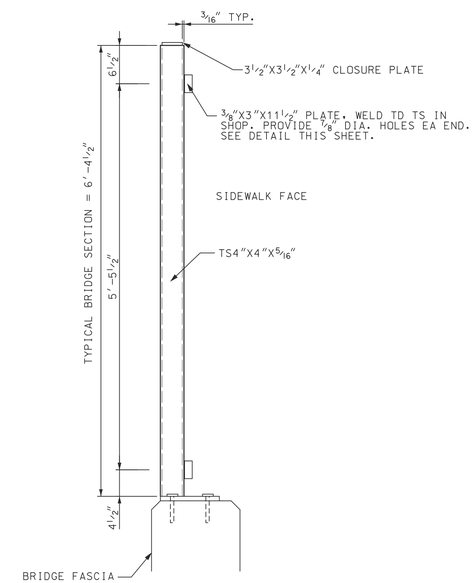

FENCE POST DETAIL

WORKS WITH SHEETS 25, 27

REV #	DATE	DESCRIPTION	BY

NOT VALID FOR CONSTRUCTION UNLESS SIGNED AND DATED

WADETRIM
500 Griswold, Suite 2500
Detroit, MI 48226
313.961.3650
FAX 313.961.0898
www.wadetrim.com

Building relationships on a foundation of excellence

CITY OF DETROIT
DEPARTMENT OF PUBLIC WORKS
CITY ENGINEERING DIVISION
ADELAIDE ST. OVER DEQUINDRE CUT S.N. 12446
SUPERSTRUCTURE DETAIL SHEET

ISSUED FOR: DATE: BY:

JOB NO. DTE 2025-09T

SHEET 27 (434)

ADELAIDE STREET BRIDGE

© Wade Trim Group, Inc.

PROJECT MANAGER: FIELD BOOK INFORMATION: —
PLOTTED 5/21/2013 12:22:48 PM BY Conetona
c:\pw_work\conetona\d0369048\CSP-PL75-Adelaidefencedetails.dgn

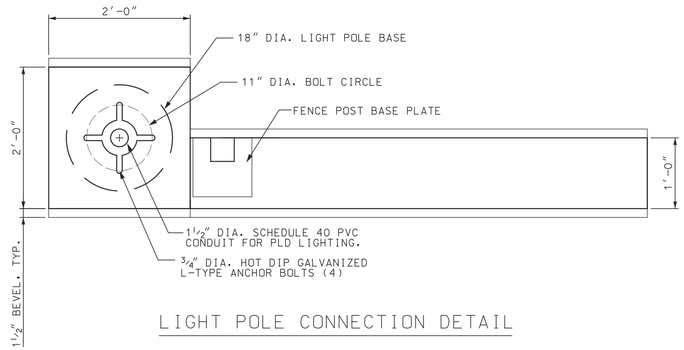

LIGHT POLE CONNECTION DETAIL

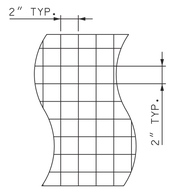

FENCE FABRIC DETAIL

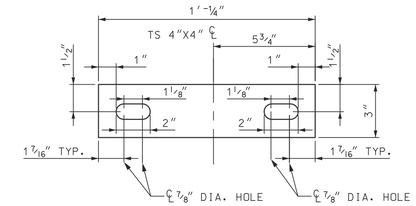

FENCE PANEL EXPANSION PLATE DETAIL

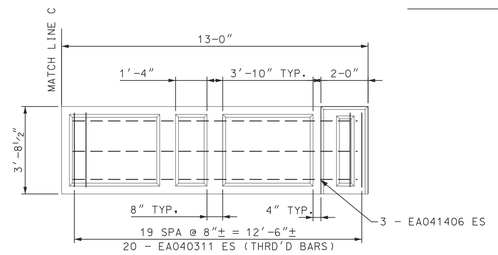

SW QUADRANT

TEXTURED CONCRETE SURFACE TYP. BOTH SIDES OF RAILING

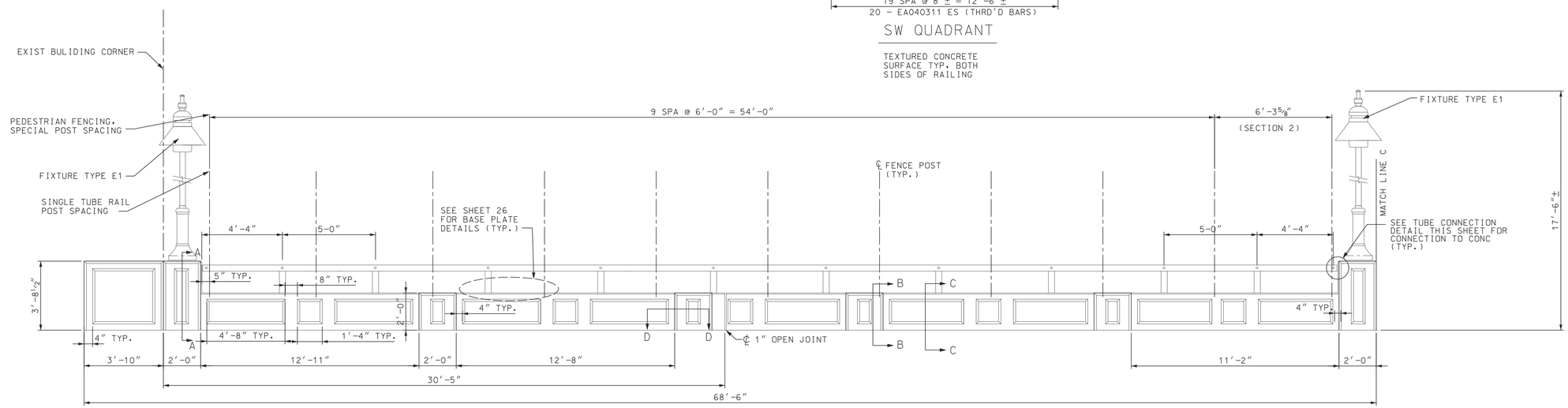

SOUTH ELEVATION VIEW

NO SCALE

NOTE:
VIEW FROM CENTERLINE OF ROAD LOOKING AT INNER FACE OF RAILING.

TEXTURED CONCRETE SURFACE TYP. BOTH SIDES OF RAILING

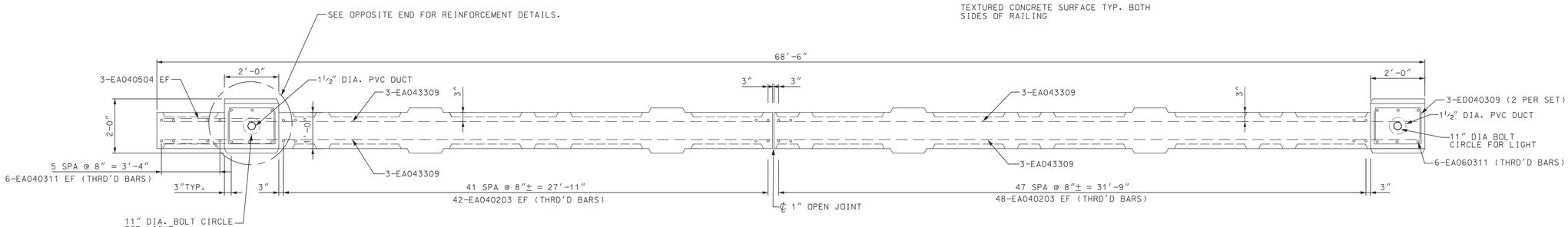

SOUTH RAILING PLAN

NO SCALE

WORKS WITH SHEETS 25-26

REV#	DATE	DESCRIPTION	BY

NOT VALID FOR CONSTRUCTION UNLESS SIGNED AND DATED

WADETRIM
500 Griswold, Suite 2500
Detroit, MI 48226
313.961.1450
FAX: 313.961.0898
www.wadetrim.com

Building relationships on a foundation of excellence.

CITY OF DETROIT
DEPARTMENT OF PUBLIC WORKS
CITY ENGINEERING DIVISION
ADELAIDE ST. OVER DEQUINDRE CUT S.N. 124446
SUPERSTRUCTURE DETAIL SHEET 2

ISSUED FOR: DATE: BY:

JOB NO. DTE 2025-09T

SHEET 28 (435)

ADELAIDE STREET BRIDGE

© Wade Trim Group, Inc.

PROJECT MANAGER:- FIELD BOOK INFORMATION:-
<C:\pw_work\cometona\d0360948\CSP-PLTS-Pedestrianrevdetails2.dgn>
PLOTTED 5/21/2013 12:23:51 PM BY Cometona

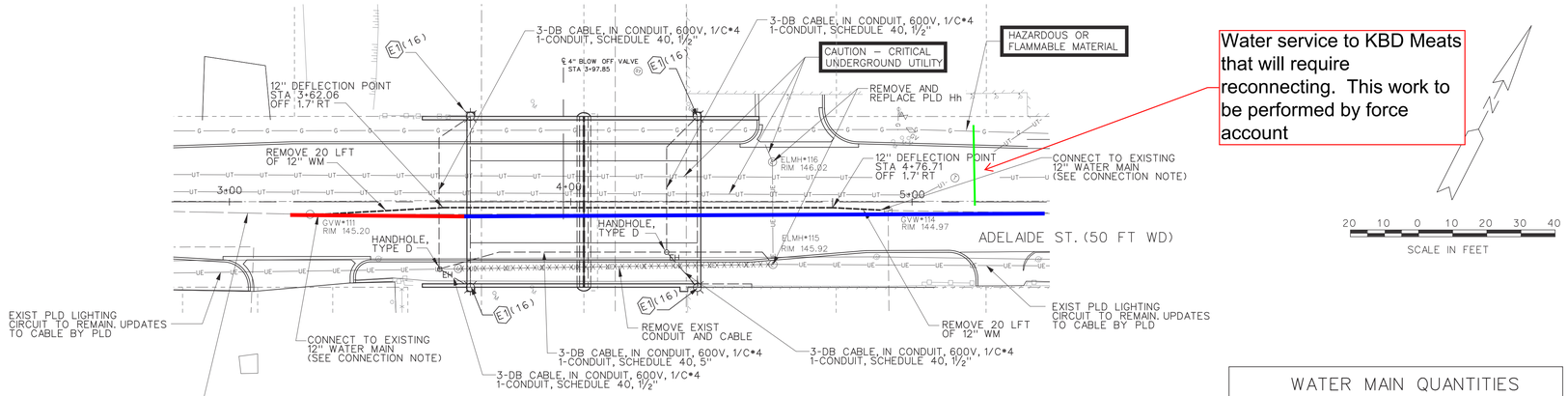

SITE PLAN

SCALE: 1"=40'

Water service to KBD Meats that will require reconnecting. This work to be performed by force account

20 10 0 10 20 30 40

SCALE IN FEET

WATER MAIN QUANTITIES

70 ft	170	FT	WATER MAIN, DI, 12 INCH, TR DET G
	40	FT	WATER MAIN, REM
	4	CYD	FLOWABLE FILL, NON-STRUCTURAL
	1	EA	GATE VALVE & BOX, 4 INCH
0 ft	105	FT	STEEL CASING PIPE, 24 INCH, TR DET G
	1	EA	GATE WELL, 60 INCH DIA
	1	EA	DR STRUCTURE COVER, TYPE B

PLD QUANTITIES

97	FT	CABLE, REM
115	FT	CONDUIT, SCHEDULE 40, 1½ INCH
100	FT	CONDUIT, SCHEDULE 40, 5 INCH

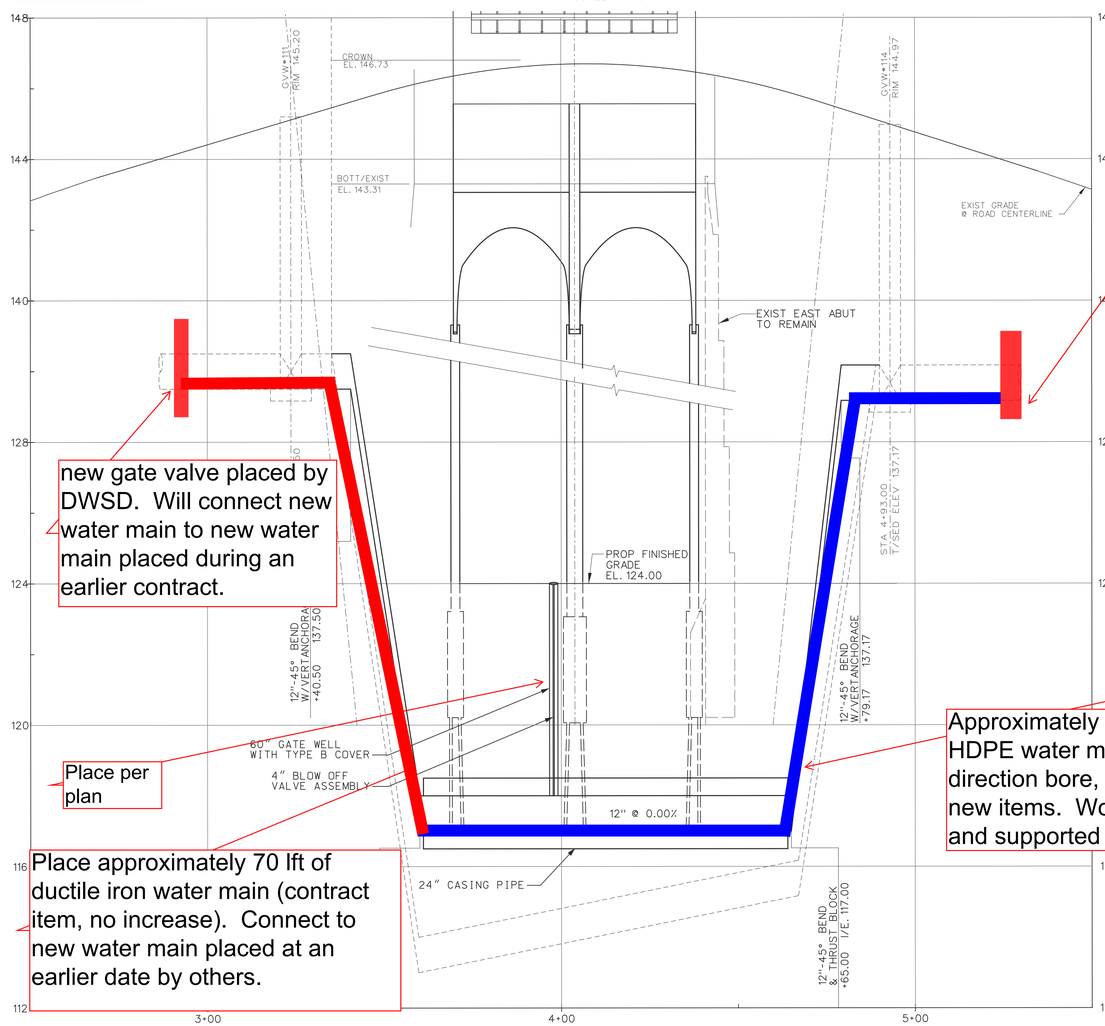

PROFILE

SCALE: VERT 1"=2'
HORZ 1"=20'

new gate valve placed by DWSD. Will connect new water main to new water main placed during an earlier contract.

Place per plan

Place approximately 70 lft of ductile iron water main (contract item, no increase). Connect to new water main placed at an earlier date by others.

New gate valve and well placed at an earlier date by this contract. Will connect new water main to new water main placed by an earlier contract

Approximately 175 lft of SDR10 HDPE water main placed by direction bore, paid as extra work, new items. Work by USA, LLC and supported by AICC.

THE PVC CONDUIT SHALL BE PLACED IN THE FILL AREA BETWEEN TOP OF ARCHES AND ROADWAY SUBBASE. COORDINATE WITH PRECAST DWGS AS TO LOCATION OF DUCT CONNECTION AT PRECAST HEADWALL.

REMOVAL OF EXIST PLD CONDUIT IS INCLUDED IN THE PAY ITEM "STRUCTURE, REM PORTIONS, MODIFIED."

THE NUMBER FOLLOWING (E1) INDICATES POLE HEIGHT

FOR DETAILS OF FIXTURE TYPE E1 SEE PROJECT SHEET 396 (WILKINS SHEET 30) FOR DETAILS AND FIXTURE SCHEDULE.

DWSD NOTES:

SEE SPECIAL PROVISIONS FOR WORKING AROUND DWSD FACILITIES.

SEE SHEET 31 FOR DWSD STANDARD DETAILS. FOR DETAILS OF GATE WELL WITH BLOW OFF VALVE, SEE DWSD STANDARD DETAILS.

CONNECT NEW 12" D.I. WATER MAIN TO EXISTING WATER MAIN AFTER HYDROSTATIC AND BACTERIAL TEST HAVE BEEN SUCCESSFULLY COMPLETED AND REVIEWED BY THE ENGINEER. INCLUDE IN PAY ITEM "WATER MAIN, DI, 12 INCH,

LES ARE ENCOUNTERED
TO CUT DOWN TO 6'-0" BELOW
THIS WORK SHALL BE INCLUDED IN
VATER MAIN, REM".

SHALL COORDINATE INSTALLATION
AIN WITH FIBER OPTIC LINES. SEE
VISIONS.

REV#	DATE	DESCRIPTION	BY

NOT VALID FOR CONSTRUCTION UNLESS SIGNED AND DATED

WADETRIM
500 Griswold, Suite 2500
Detroit, MI 48226
313.961.8500
FAX: 313.961.0888
www.wadetrim.com

Building relationships on a foundation of excellence

CITY OF DETROIT
DEPARTMENT OF PUBLIC WORKS
CITY ENGINEERING DIVISION
ADELAIDE ST. OVER DEQUINDRE CUT S.N. 12446
PLD/DWSD PLAN AND DETAILS

ISSUED FOR: DATE: BY:

JOB NO. DTE 2025-09T

SHEET 29 (436)

ADELAIDE STREET BRIDGE

© Wade Trim Group, Inc.

PROJECT MANAGER: - FIELD BOOK INFORMATION: -
C:\pw_work\cpreston\d0369048\CEP_PLTS Plan v Site.dgn
PLOTTED 5/21/2013 12:26:25 PM BY Cpreston

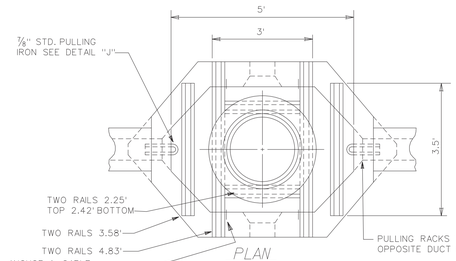

PLAN

TYPE "S" HANDHOLE

N.T.S.

TYPE "S" HANDHOLE TABLE FOR #5 BARS		
MARK	NO.	LENGTH
5-50	2	5'
5-46	8	4.5'
5-36	4	3.5'
5-30	6	2'
5-19	10	21'
5-10	8	12'

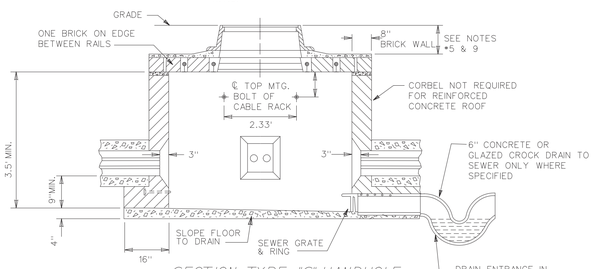

SECTION TYPE "S" HANDHOLE

N.T.S.

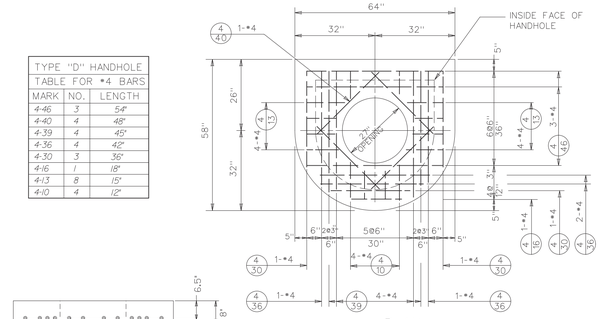

PLAN

ALTERNATE ROOF-TYPE "D" HANDHOLE

N.T.S.

TYPE "D" HANDHOLE TABLE FOR #4 BARS		
MARK	NO.	LENGTH
4-46	3	54'
4-40	4	48'
4-39	4	45'
4-36	4	42'
4-30	3	36'
4-16	1	18'
4-13	8	15'
4-10	4	12'

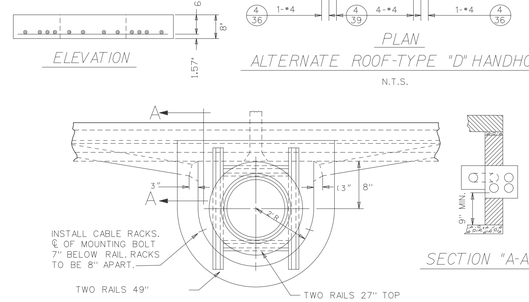

ELEVATION

PLAN

SECTION "A-A"

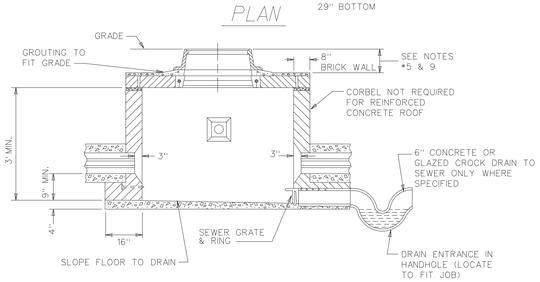

SECTION TYPE "D" HANDHOLE

N.T.S.

NOTE:

1. DUCT ENTRANCE TO BE BUILT AS REQUIRED.
2. ALL RAILS TO BE 60#/YD. OR HEAVIER.
3. CABLE PULLING IRONS TO BE GALVANIZED
4. CABLE RACKS AND ARMS TO BE GALVANIZED.
5. IN PAVEMENT PROVIDE AT LEAST 3" BETWEEN ROOF AND BASE OF PAVEMENT. WHERE EXISTING GRADE IS HIGHER THAN PROP. FUTURE GRADE INSTALL BRICK RING OR GROUT (AS REQ'D.) UNDER FRAME TO ALLOW FOR FUTURE FRAME ADJUSTMENT.
6. BAR NUMBERS DENOTE THE SIZE OF BAR REQUIRED IN ACCORDANCE WITH CURRENT USAGE SPECIFIED BY THE CONCRETE REINFORCING STEEL INSTITUTE.
7. EXCAVATION LIMITS FOR PUBLIC LIGHTING DEPARTMENT HANDHOLES SHALL BE ON VERTICAL PLANES OF THE FOOTING OUTLINE.
8. INSTALL ANCHORS & CABLE-RACKS AS SHOWN.
9. WHERE HANDHOLES ARE LOCATED BACK OF CURBS ROOF MUST BE BUILT 18" BELOW CURB GRADE, TO PROVIDE FOR FUTURE WIDENING.

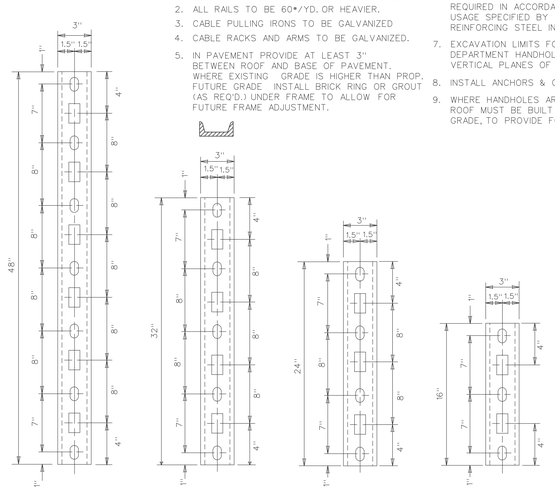

DETAIL "A" DETAIL "B" DETAIL "C" DETAIL "D"

CABLE RACKS

3" STD. 4.1# CHANNEL

N.T.S.

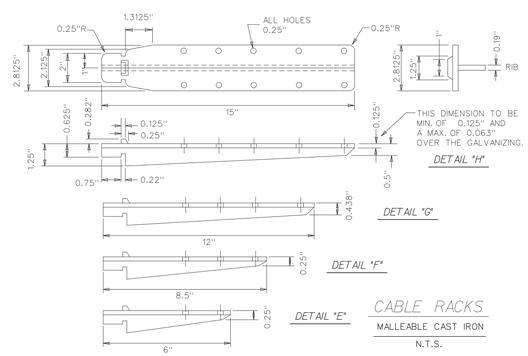

DETAIL "H"

DETAIL "G"

DETAIL "F"

DETAIL "E"

CABLE RACKS

MALLEABLE CAST IRON

N.T.S.

NOTE:

BELL ENDS ARE REQUIRED ON EACH CONDUIT BROKEN OUT IN HANDHOLE. TYPE AND SIZE SHALL BE IDENTICAL TO CONDUIT TYPE AND SIZE.

NOTE:

CABLE RACKS SHALL BE GALV. AFTER FAB. IN ACCORDANCE WITH ASTM A-123.

CABLE ARMS SHALL BE GALV. AFTER FAB. IN ACCORDANCE WITH ASTM A-153 53.

ARMS MUST FIT ON INSIDE & OUTSIDE OF RACKS & MUST ALLOW INSULATOR TO FIT LOOSELY.

USE 0.5" GALV. SUPPORTING BOLTS AND EXPANSION ANCHORS.

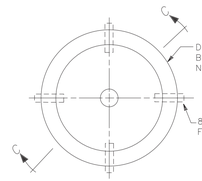

PLAN

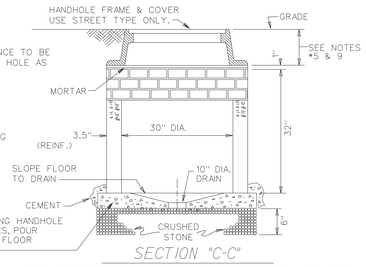

SECTION "C-C"

REINFORCED CONCRETE PIPE (CLASS III)

ROUND HANDHOLE

NOTE:

1. FRAMES MAY BE A.S.T.M. CLASS 30 GRAY IRON IF THE CONTRACTOR SO ELECTS.
2. ALL FILLETS ARE 0.5" RADIUS & ALL ROUNDS ARE 0.25" RADIUS

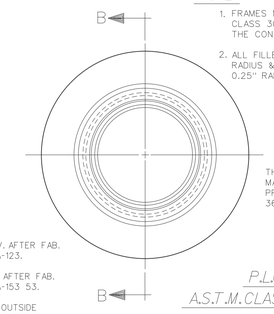

P.L.C. PATTERN NO.1A

A.S.T.M. CLASS 20 OR 30 GRAY IRON

APPROX. 251 LBS.

HANDHOLE FRAME

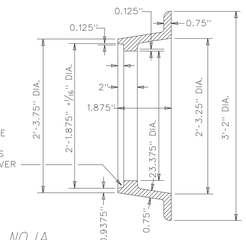

SECTION "B-B"

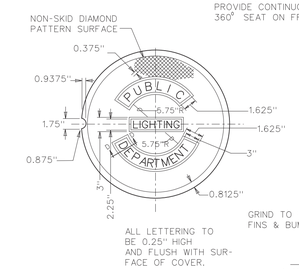

ALL LETTERING TO BE 0.25" HIGH AND FLUSH WITH SURFACE OF COVER.

SECTION "D-D"

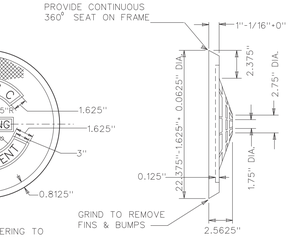

P.L.C. PATTERN NO.2A

A.S.T.M. CLASS 30 GRAY IRON

APPROX. WT. 145 LBS.

STREET TYPE COVER

TO BE USED IN STREETS & DRIVES

SECTION "E-E"

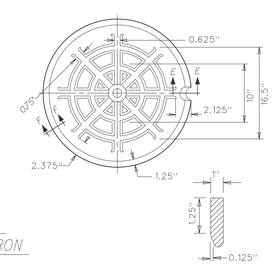

SECTION "F-F"

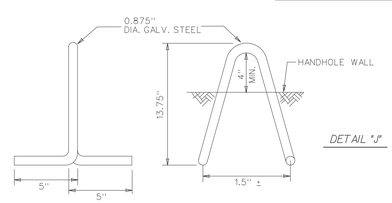

PULLING IRON

N.T.S.

DETAIL "J"

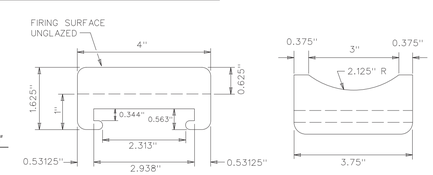

CABLE ARM INSULATORS

WHITE GLAZED PORCELAIN DRY PROCESS

N.T.S.

REV #	DATE	DESCRIPTION	BY

NOT VALID FOR CONSTRUCTION UNLESS SIGNED AND DATED

WADETRIM

500 Griswold, Suite 2500
Detroit, MI 48226
313.961.1450
313.961.5660
FAX: 313.961.0888
www.wadetrim.com

Building relationships on a foundation of excellence.

CITY OF DETROIT
DEPARTMENT OF PUBLIC WORKS
CITY ENGINEERING DIVISION
ADELAIDE ST. OVER DEQUINDRE CUT S.N. 124446
HANDHOLE DETAILS

ISSUED FOR: DATE: BY:

JOB NO. DTE 2025-09T

SHEET 30 (437)

ADELAIDE STREET BRIDGE

© Wade Trim Group, Inc.

PROJECT MANAGER: FIELD BOOK INFORMATION:
C:\pw_work\cpowell\d0369048\CDT PL15 HandHole.dgn
PLOTTED 5/21/2013 12:27:58 PM BY Cameronp

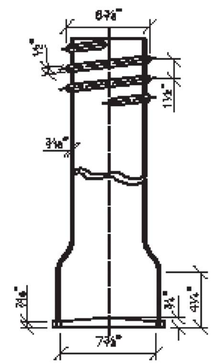

GATE BOX BOTTOM

GATE BOX TOP

GATE BOX COVER

GATE BOX BASE

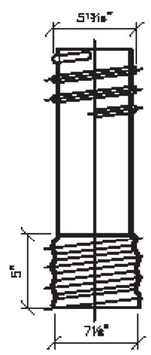

GATE BOX EXTENSION

NOTE

MATERIAL: GRAY CAST IRON PER LATEST REVISION ASTM A74 OR PLASTIC ASTM D2466 OR D2468. PLUG TO CONTAIN AN APPROVED POLY IRON MAGNETICALLY LOCATABLE MATERIAL

C					
B					
A					
	DESCRIPTION	DRW	CKD	APP	DATE
REVISIONS					

DRAWN BY: S.D.A.
CHECKED BY: S.D.A.
APPROVED:

BOX, 5 1/4 INCH, ROADWAY TELESCOPING

SCALE: NONE

CITY OF DETROIT
WATER AND SEWERAGE DEPARTMENT
ENGINEERING DIVISION

SHEET 1 OF 1

DWG No. 02620-04

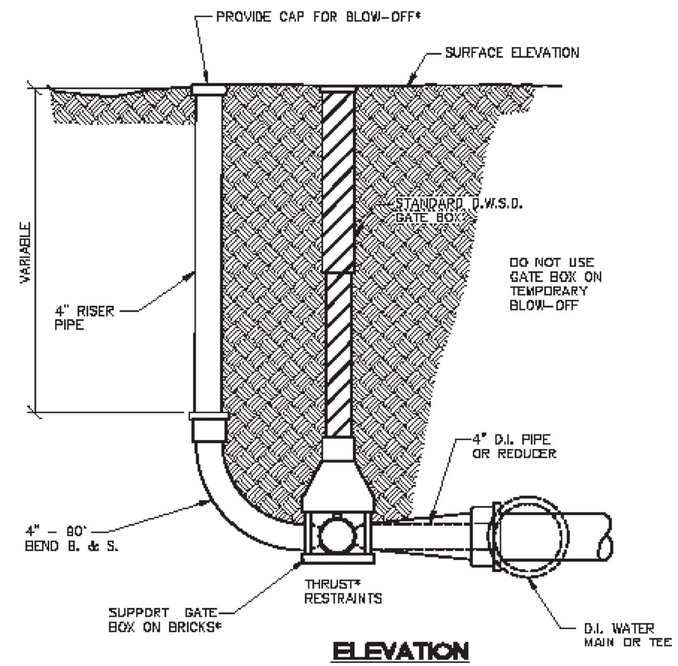

ELEVATION

NOTE

* DESIGNER SHALL DETERMINE SIZE OF STRUCTURES.

C					
B					
A					
	DESCRIPTION	DRW	CKD	APP	DATE
REVISIONS					

DRAWN BY: S.D.A.
CHECKED BY: S.D.A.
APPROVED:

VALVE, BLOW OFF 4 INCH, TEMPORARY

SCALE: NONE

CITY OF DETROIT
WATER AND SEWERAGE DEPARTMENT
ENGINEERING DIVISION

SHEET 1 OF 1

DWG No. 02630-18

NOTES:

WORK THIS SHEET WITH SHEET 29.

THRUST BLOCKS ARE INCLUDED IN THE PAY ITEM "WATER MAIN, DI, 12 INCH, TR DET G".

THE 4"-90° BEND, 4" RISER PIPE AND BLOW OFF CAP SHALL BE INCLUDED IN THE PAY ITEM "GATE VALVE AND BOX, 4 INCH".

REV #	DATE	DESCRIPTION	BY

NOT VALID FOR CONSTRUCTION UNLESS "SIGNED AND DATED"

WADETRIM
500 Griswold, Suite 2500
Detroit, MI 48226
313.961.1860
FAX 313.961.0898
www.wadetrim.com

Building relationships on a foundation of excellence

CITY OF DETROIT
DEPARTMENT OF PUBLIC WORKS
CITY ENGINEERING DIVISION
ADELAIDE ST. OVER DEQUINDRE CUT S.N. 12446
DWSD STANDARD DETAILS - 1

ISSUED FOR: DATE: BY:

JOB NO. DTE 2025-09T

SHEET 31 (438)

ADELAIDE STREET BRIDGE

© Wade Trim Group, Inc.

PROJECT MANAGER: -
FIELD BOOK INFORMATION: -
c:\pw_work\corporation\d0369048\CEPLTS Standard\dwsd04-ds1.dgn
PLOTTED 5/21/2013 12:29:29 PM BY Cornelong

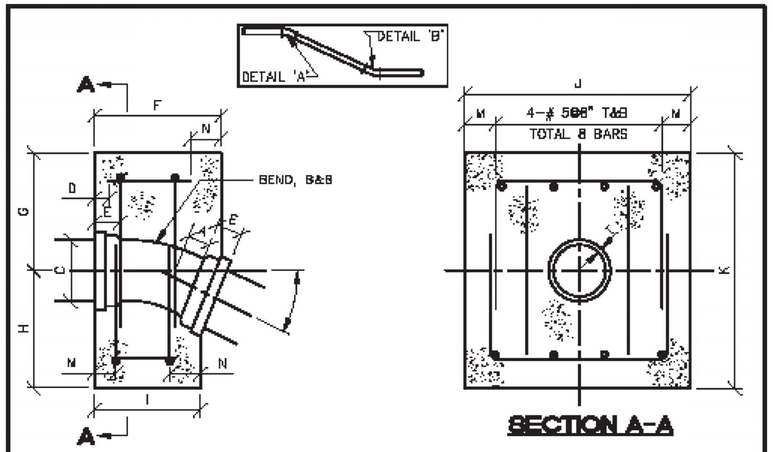

ELEVATION

SECTION A-A

SCHEDULE OF THRUST BLOCK DIMENSIONS												DIMENSIONS - INCHES					
SIZE OF PIPE (IN)	BEND IN DEGREE	F (FT)	G (FT)	H (FT)	I (FT)	J (FT)	K (FT)	L (FT)	M (FT)	N (FT)	↔	A	C	E	R	D	T
6	22½	1.583	1.33	1.67	1.33	2.67	3.00	0.00	0.33	0.25	3@8"	5.0	10.8	4.0	15.08	1.50	0.55
6	45	1.583	1.33	1.67	1.00	2.67	3.00	0.00	0.33	0.25	3@8"	5.0	10.8	4.0	07.25	1.50	0.55
8	22½	1.583	1.33	1.67	1.33	2.67	3.00	0.33	0.33	0.25	4@8"	5.5	13.0	4.0	17.62	1.50	0.60
8	45	1.67	1.50	2.50	1.00	4.00	4.00	0.50	0.50	0.25	4@12"	5.5	13.0	4.0	08.44	1.50	0.60
10	22½	1.83	1.50	2.50	1.42	3.50	4.00	0.50	0.50	0.25	4@10"	6.5	15.3	4.0	22.62	1.50	0.68
10	45	1.92	1.67	2.83	1.00	4.00	4.50	0.67	0.67	0.25	4@12"	6.5	15.3	4.0	10.88	1.50	0.68
12	22½	2.00	1.50	2.50	1.583	4.00	4.00	0.67	0.50	0.33	4@12"	7.5	17.8	4.0	27.62	1.50	0.75
12	45	2.08	1.50	3.00	1.17	5.00	4.50	0.92	0.75	0.25	4@14"	7.5	17.8	4.0	13.25	1.50	0.75
16	22½	2.17	1.67	2.83	1.583	5.00	4.50	0.83	0.75	0.33	4@14"	8.0	22.2	4.0	27.62	1.75	0.89

NOTE

THE DESIGN ENGINEER IS RESPONSIBLE FOR ENSURING THAT THE THRUST BLOCKS ARE CORRECTLY SIZED FOR EACH APPLICATION.

DETAIL "A"

	DESCRIPTION	DRW	CKD	APP	DATE
C					
B					
A					

REVISIONS

DRAWN BY: S.D.A.

CHECKED BY: S.D.A.

APPROVED:

THRUST BLOCK, VERTICAL BEND (TRADITIONAL DWSD SIZING)

SCALE: NONE

CITY OF DETROIT
WATER AND SEWERAGE DEPARTMENT
ENGINEERING DIVISION

SHEET 1 OF 2

DWG No. 03430-28

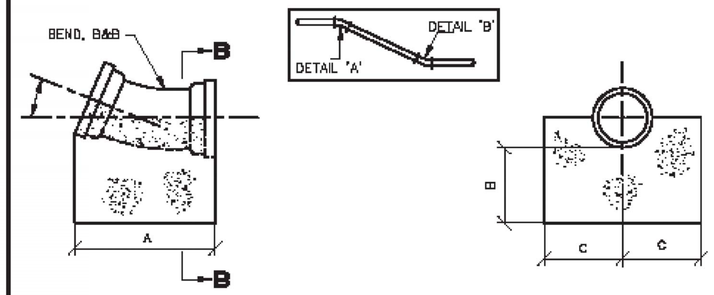

ELEVATION

SECTION B-B

SIZE OF PIPE (IN)	BEND IN DEGREE	A (FT)	B (FT)	C (FT)
6	22½	1.67	1.00	1.00
6	45	1.67	1.00	1.00
8	22½	1.75	1.00	1.00
8	45	1.75	1.00	1.00
10	22½	1.92	1.00	1.00
10	45	1.92	1.00	1.00
12	22½	2.17	1.00	1.00
12	45	2.17	1.00	1.00
16	22½	2.25	1.00	1.25
16	45	2.25	1.00	1.25

NOTE

THE DESIGN ENGINEER IS RESPONSIBLE FOR ENSURING THAT THE THRUST BLOCKS ARE CORRECTLY SIZED FOR EACH APPLICATION.

DETAIL "B"

	DESCRIPTION	DRW	CKD	APP	DATE
C					
B					
A					

REVISIONS

DRAWN BY: S.D.A.

CHECKED BY: S.D.A.

APPROVED:

THRUST BLOCK, VERTICAL BEND (TRADITIONAL DWSD SIZING)

SCALE: NONE

CITY OF DETROIT
WATER AND SEWERAGE DEPARTMENT
ENGINEERING DIVISION

SHEET 2 OF 2

DWG No. 03430-27

NOTES:

WORK THIS SHEET WITH SHEET 29.

THRUST BLOCKS ARE INCLUDED IN THE PAY ITEM "WATER MAIN, DI, 12 INCH, TR DET G".

THE 4"-90° BEND, 4" RISER PIPE AND BLOW OFF CAP SHALL BE INCLUDED IN THE PAY ITEM "GATE VALVE AND BOX, 4 INCH".

REV #	DATE	DESCRIPTION	BY

NOT VALID FOR CONSTRUCTION UNLESS SIGNED AND DATED

WADETRIM
500 Griswold, Suite 2500
Detroit, MI 48226
313.961.1830
FAX 313.961.0898
www.wadetrim.com

Building relationships on a foundation of excellence

CITY OF DETROIT
DEPARTMENT OF PUBLIC WORKS
CITY ENGINEERING DIVISION
ADELAIDE ST. OVER DEQUINDRE CUT S.N. 124446
DWSD STANDARD DETAILS - 2

ISSUED FOR: DATE: BY:

JOB NO. DTE 2025-09T

SHEET 32 (439)

ADELAIDE STREET BRIDGE

© Wade Trim Group, Inc.

PROJECT MANAGER: - FIELD BOOK INFORMATION: -
C:\pw_work\cornetona\d0360948\CEP-PLTS-Standards\DSDetails2.dgn
PLOTTED 5/21/2013 12:33:09 PM BY Cornetona

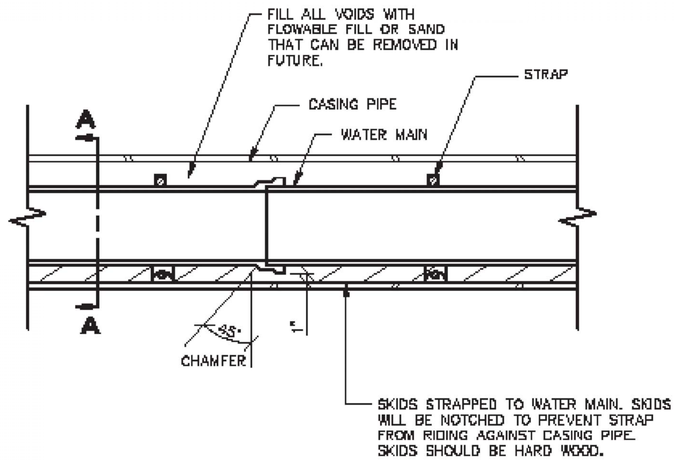

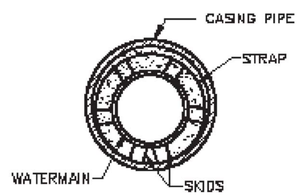

SECTION A-A

NOTES

THE ENDS OF THE CASING SHALL BE SUITABLY PROTECTED AGAINST THE ENTRANCE OF FOREIGN MATERIAL, BUT SHALL NOT BE TIGHTLY SEALED.

C					
B					
A					
	DESCRIPTION	DRW	CKD	APP	DATE
REVISIONS					

DRAWN BY: S.D.A.
CHECKED BY: S.D.A.
APPROVED:

CASING PIPE SECTION FOR WATERMAIN

SCALE: NONE

CITY OF DETROIT
WATER AND SEWERAGE DEPARTMENT
ENGINEERING DIVISION

SHEET 1 OF 1
DWG No. 02620-05

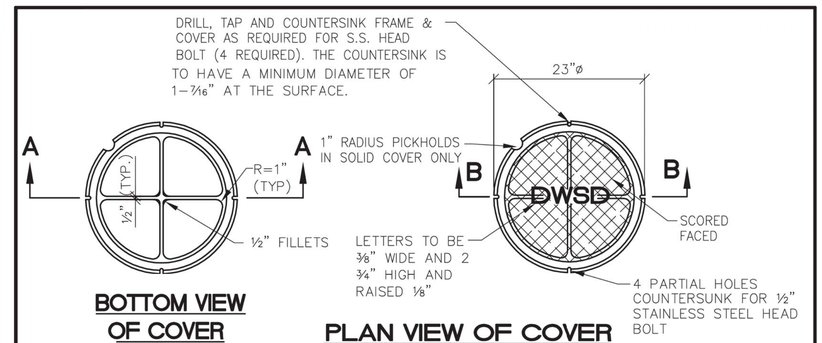

BOTTOM VIEW OF COVER

PLAN VIEW OF COVER

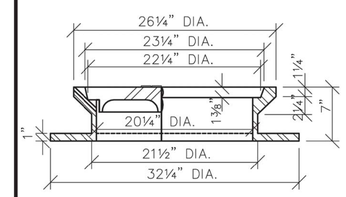

SECTION A-A

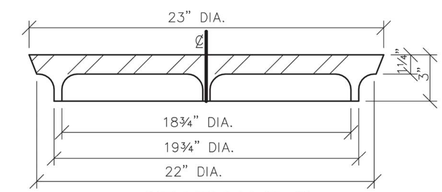

SECTION B-B

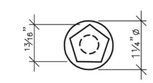

PLAN VIEW OF BOLT

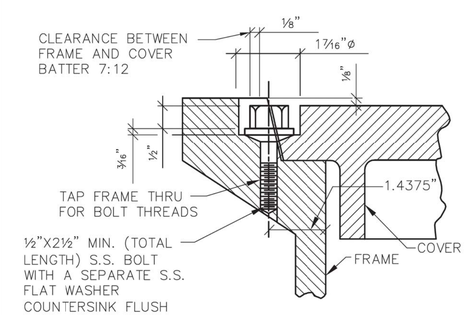

BOLT DETAIL

NOTES

1. FRAME & COVER TO BE GRAY IRON CASTING , ASTM A48, CLASS 30B
   TOTAL WT. = 409# (PERF. COVER)
   MANHOLE FRAME = 262#
   COVER (PERF) = 147#
   COVER (BLANK) = 157#
   THE SEATING FACE OF THE COVER & SEAT FOR SAME ON THE FRAME SHALL BE MACHINE FINISHED OR THE EQUIVALENT THEREOF SO THAT THE COVER SHALL HAVE AN EVEN BEARING ON ITS SEAT AT ALL POINTS WITHOUT ROCKING OR TILTING.
2. FOR ½" BOLT: NO. 13 NATIONAL STD COURSE THD.

C					
B					
A					
	DESCRIPTION	DRW	CKD	APP	DATE
REVISIONS					

DRAWN BY: S.D.A.
CHECKED BY: S.D.A.
APPROVED:

MANHOLE, COVER WITH FRAME

SCALE: NONE

CITY OF DETROIT
WATER AND SEWERAGE DEPARTMENT
ENGINEERING DIVISION

SHEET 1 OF 1
DWG No. 02600-07

NOTES:

WORK THIS SHEET WITH SHEET 29.

THRUST BLOCKS ARE INCLUDED IN THE PAY ITEM "WATER MAIN, DI, 12 INCH, TR DET G".

THE 4"-90° BEND, 4" RISER PIPE AND BLOW OFF CAP SHALL BE INCLUDED IN THE PAY ITEM "GATE VALVE AND BOX, 4 INCH".

REV#	DATE	DESCRIPTION	BY

NOT VALID FOR CONSTRUCTION UNLESS "SIGNED AND DATED"

WADETRIM
500 Griswold, Suite 2500
Detroit, MI 48226
313.961.3650
FAX 313.961.0898
www.wadetrim.com

Building relationships on a foundation of excellence

CITY OF DETROIT
DEPARTMENT OF PUBLIC WORKS
CITY ENGINEERING DIVISION
ADELAIDE ST. OVER DEQUINDRE CUT S.N. 12446
DWSD STANDARD DETAILS - 3

ISSUED FOR: DATE: BY:

JOB NO. DTE 2025-09T

SHEET 33 (440)

ADELAIDE STREET BRIDGE

© Wade Trim Group, Inc.

PROJECT MANAGER: -
FIELD BOOK INFORMATION: -
C:\pw_work\spencerro\d0369048\CEP_PLTS_Standard\02600detls3.dgn
PLOTTED 5/21/2013 12:35:17 PM BY Cornelong

	BAR	DIMENSIONS a	b	c	d	e	f	g	h	j	k	m	p	NO. REQ'D	TOTAL WT.
FOOTING	EA080906	9′-6″												16	406
	EA081800	18′-0″												16	769
	EA082303	23′-3″												40	2483
	EA082609	26′-9″												12	857
	EA082610	26′-10″												24	1719
	EA082806	28′-6″												36	2739
	EA083903	39′-3″												128	13414
	EB081009	8′-3″	2′-6″											40	1148
	EB090808	7′-5″	1′-3″											35	1031
	EB090902	7′-5″	1′-9″											558	17391
	EB091002	7′-5″	2′-9″											220	7605
	EC070700	1′-5″	5′-0″				1′-5″	2′-0″						04	57
	ED040606	2′-3″	2′-0″	2′-3″										176	764
	ED070906	1′-9″	6′-0″	1′-9″										420	8156
	ED090606	1′-9″	3′-0″	1′-9″										12	265
	ED090702	1′-9″	3′-8″	1′-9″										24	585
	ED090706	1′-9″	4′-0″	1′-9″										24	612
	ED091208	4′-6″	3′-5″	4′-6″										35	1507
	EK040708	1′-7¼″	1′-5¼″	1′-5″	1′-7¼″									216	1106
	EK041010	2′-0″	1′-10″	1′-10″	2′-6″									216	1563
														TOTAL = 64179	

	BAR	DIMENSIONS a	b	c	d	e	f	g	h	j	k	m	p	NO. REQ'D	TOTAL WT.
SILL WALL	EA080706	7′-6″												24	481
	EA081600	16′-0″												24	1025
	EA082609	26′-9″												13	928
	EA082610	26′-10″												40	2866
	EA082706	27′-6″												39	2864
	ED091003	4′-6″	1′-3″	4′-6″										35	1220
	ED091100	4′-6″	2′-0″	4′-6″										279	10435
	ED091206	4′-6″	3′-6″	4′-6″										110	4675
	EC040300	0″	2′-6″	0′-4¼″	0′-4¼″	0′-6″	0″	0″						4	8
	EU060409	2′-0″	1′-6″	1′-9″	1′-6″	1′-0″								6	43
														TOTAL = 24544	

	BAR	DIMENSIONS a	b	c	d	e	f	g	h	j	k	m	p	NO. REQ'D	TOTAL WT.
BRIDGE RAILING	EA040203	2′-3″	6″ THREADED BARS ONE END											372	559
	EA043309	33′-9″												24	541
	EA060311	3′-11″	6″ THREADED BARS ONE END											24	141
	ED040309	1′-2″	1′-6″	1′-2″										24	60
	EA040311	3′-11″												12	31
														TOTAL = 1332	

	BAR	DIMENSIONS a	b	c	d	e	f	g	h	j	k	m	p	NO. REQ'D	TOTAL WT.
AESTHETIC CONCRETE RAILING, SPECIAL	EA040311	3′-11″	6″ THREADED BARS ONE END											132	345
	EA040504	5′-4″												6	21
	EA041406	14′-6″												12	116
	EA041606	16′-6″												6	66
														TOTAL = 548	

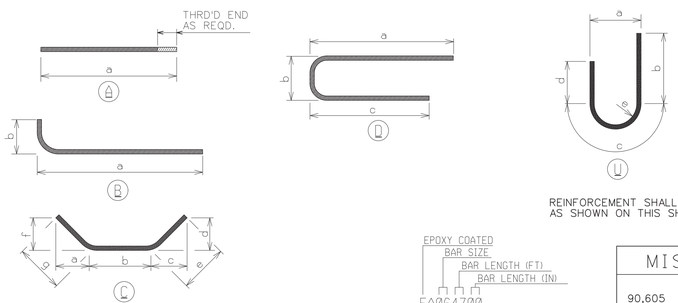

REINFORCEMENT SHALL BE BUNDLED AND TAGGED AS TO THE LOCATION AS SHOWN ON THIS SHEET.

EPOXY COATED
BAR SIZE
BAR LENGTH (FT)
BAR LENGTH (IN)
EA064700
BAR SHAPE
BAR LEGEND

MISCELLANEOUS QUANTITIES

90,605	LB	REINFORCEMENT, STEEL, EPOXY COATED

BILL OF MATERIALS: ROAD ITEMS (PART 1)

ITEM NUMBER	ITEM DESCRIPTION	TOTAL PLAN QUANTITY	ITEM UNIT
1027051	AUDIO-VISUAL FILMING (SN 12446)	1	LS
2040050	PAVT, REM	486	SYD
2040055	SIDEWALK, REM	331	SYD
2050010	EMBANKMENT, CIP	248	CYD
2050016	EXCAVATION, EARTH	550	CYD
2050030	MACHINE GRADING	2	STA
3010002	SUBBASE, CIP	52	CYD
3020010	AGGREGATE BASE, 4 INCH	870	SYD
4011136	STEEL CASING PIPE, 24 INCH, TR DET G	105	FT
4030010	DR STRUCTURE COVER, TYPE B	1	EA
4030306	DR STRUCTURE, TAP, 6 INCH	3	EA
4040033	UNDERDRAIN, FDN, 6 INCH	200	FT
4040093	UNDERDRAIN OUTLET, 6 INCH	95	FT
5010005	HMA SURFACE, REM	486	SYD
5010025	HMA PATCHING	7	TON
6020166	CONC PAVT WITH INTEGRAL CURB, NONREINF, 9 INCH	853	SYD
6020200	JOINT, CONTRACTION, CP	620	FT
7067021	FLOWABLE FILL, NON-STRUCTURAL	4	CYD
8010005	DRIVEWAY, NONREINF CONC, 6 INCH	60	SYD
8020002	CURB, CONC, DET E2	90	FT
8020050	DRIVEWAY OPENING CONC, DET M	79	FT
8030044	SIDEWALK, CONC, 4 INCH	3880	SFT
8120022	BARRICADE, TYPE III, HIGH INTENSITY, LIGHTED, FURN	10	EA
8120023	BARRICADE, TYPE III, HIGH INTENSITY, LIGHTED, OPER	10	EA
8120170	MINOR TRAF DEVICES (SN 12446)	1	LS
8120350	SIGN, TYPE B, TEMP, PRISMATIC, FURN	534	SFT
8120351	SIGN, TYPE B, TEMP, PRISMATIC, OPER	480	SFT
8120352	SIGN, TYPE B, TEMP, PRISMATIC, SPECIAL, FURN	247	SFT
8120353	SIGN, TYPE B, TEMP, PRISMATIC, SPECIAL, OPER	224	SFT
8160100	SLOPE RESTORATION, TYPE A	10	SYD
8190016	CABLE, REM	97	FT
8190146	CONDUIT, SCHEDULE 40, 1½ INCH	115	FT
8190152	CONDUIT, SCHEDULE 40, 5 INCH	100	FT
8190207	DB CABLE, IN CONDUIT, 600V, 1/C#4	650	FT
8190244	HH, ADJ	3	EA
8190254	HH, REM	2	EA
8190262	HH, TYPE D	4	EA
8197050	FIXTURE TYPE E1	4	EA
8230050	GATE VALVE AND BOX, 4 INCH	1	EA
8230166	WATER MAIN, DI, 12 INCH, TR DET G	170	FT
8130360	GATE WELL, 60 INCH DIA	1	EA
8230422	WATER SHUTOFF, ADJ, CASE 2	1	EA
8230431	GATE BOX, ADJ, CASE 1	1	EA
8237001	WATER MAIN, REM	40	FT

BILL OF MATERIALS: BRIDGE ITEMS (PART 2)

ITEM NUMBER	ITEM DESCRIPTION	TOTAL PLAN QUANTITY	ITEM UNIT
2040001	ASBESTOS MATERIALS, REMOVAL AND DISPOSAL	5000	DLR
2047050	PILE, TIMBER, REM	20	EA
2047051	RELOCATION AND SITE CLEANUP (SN 12446)	1	LS
2047051	STRUCTURES, REM PORTIONS, MODIFIED (SN 12446)	1	LS
2050031	NON-HAZARDOUS CONTAMINATED MATERIAL HANDLING AND DISPOSAL, LM	160	CYD
2060010	EXCAVATION, FDN	1144	CYD
2067021	BACKFILL, STRUCTURE, CIP	1186	CYD
2080020	EROSION CONTROL, INLET PROTECTION, FABRIC DROP	3	EA
2080036	EROSION CONTROL, SILT FENCE	450	FT
2090001	PROJECT CLEANUP (SN 12446)	1	LS
4067001	CULV, PRECAST THREE-SIDED OR ARCH, MODIFIED 32 FOOT BY 11 FOOT	100	FT
7040003	STEEL SHEET PILING, TEMP, LEFT IN PLACE	200	SFT
7050001	PREBORE, FDN PILING	986	FT
7050002	PILE DRIVING EQUIPMENT, FURN (SN 12446)	1	LS
7050030	PILE, STEEL, FURN AND DRIVEN, 12 INCH	7428	FT
7050031	TEST PILE, STEEL, 12 INCH	3	EA
7050039	PILE POINT, STEEL	58	EA
7057050	PILE, STEEL, SPLICE	186	EA
7057050	TEST PILE, DYNAMIC ANALYSIS	3	EA
7057050	TEST PILE, FURN, DYNAMIC ANALYSIS EQUIP	3	EA
7057051	MONITORING VIBRATIONS (SN 12446)	1	LS
7060012	CONC, GRADE S2, SUBFOOTING	27	CYD
7060020	CONC, LOW TEPMERATURE PROTECTION	414	CYD
7060092	REINFORCEMENT, STEEL, EPOXY COATED	90605	LB
7060100	SUBSTRUCTURE CONC	387	CYD
7067011	TEXTURING CONC	127	SYD
7067021	FLOWABLE FILL	65	CYD
7087010	WINGWALL, PRECAST	650	SFT
7100001	JOINT WATERPROOFING	1085	SFT
7100011	CONC SURFACE COATING	526	SYD
7117001	AESTHETIC CONCRETE RAIL, SPECIAL	43	FT
7117001	BRIDGE RAILING, AESTHETIC PARAPET TUBE, DETAIL 2, MODIFIED	137	FT
8087010	PEDESTRIAN FENCE, SPECIAL	822	SFT
8197050	PROTECTION, FIBER OPTIC LINE, BRIDGE	16	EA
8197050	PROTECTIVE SLEEVE, FIBER OPTIC LINE	16	EA
8197050	COORDINATION, FIBER OPTIC LINE (SN 12446)	1	LS

REV #	DATE	DESCRIPTION	BY

NOT VALID FOR CONSTRUCTION UNLESS SIGNED AND DATED

WADETRIM
500 Griswold, Suite 2500
Detroit, MI 48226
313.961.8825
FAX: 313.961.0898
www.wadetrim.com

Building relationships on a foundation of excellence.

CITY OF DETROIT
DEPARTMENT OF PUBLIC WORKS
CITY ENGINEERING DIVISION
ADELAIDE ST. OVER DEQUINDRE CUT S.N. 12446
BILL OF MATERIALS/STEEL REINFORCEMENT

ADELAIDE STREET BRIDGE

ISSUED FOR: DATE: BY:

JOB NO. DTE 2025-09T

SHEET 34 (441)

© Wade Trim Group, Inc.

PROJECT MANAGER: - FIELD BOOK INFORMATION: -
C:\pw_work\cpowtron\d0369048\CFP-PLTS-Spreaders.dgn
PLOTTED 5/21/2013 12:37:20 PM BY Cpowtron

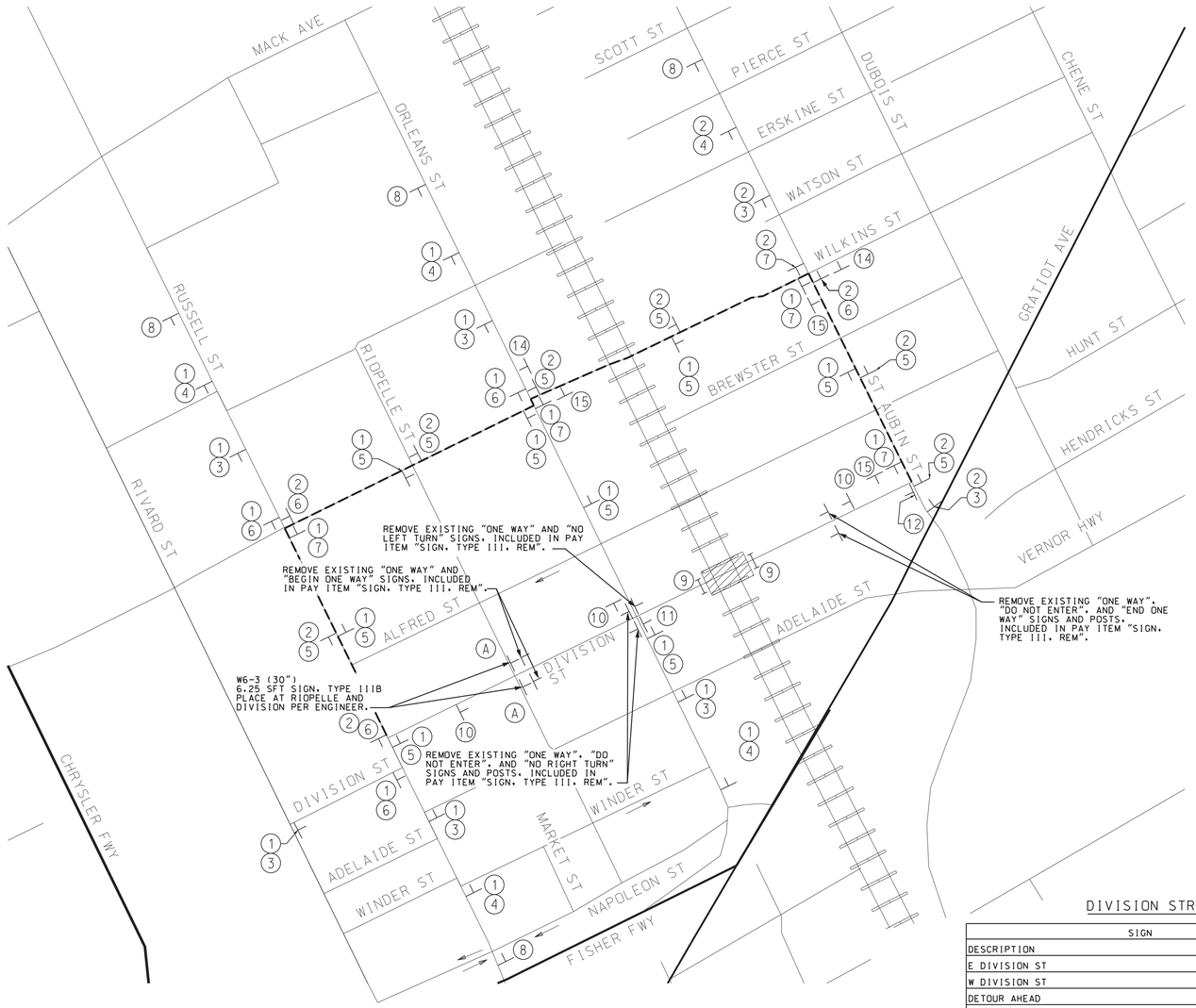

PLAN

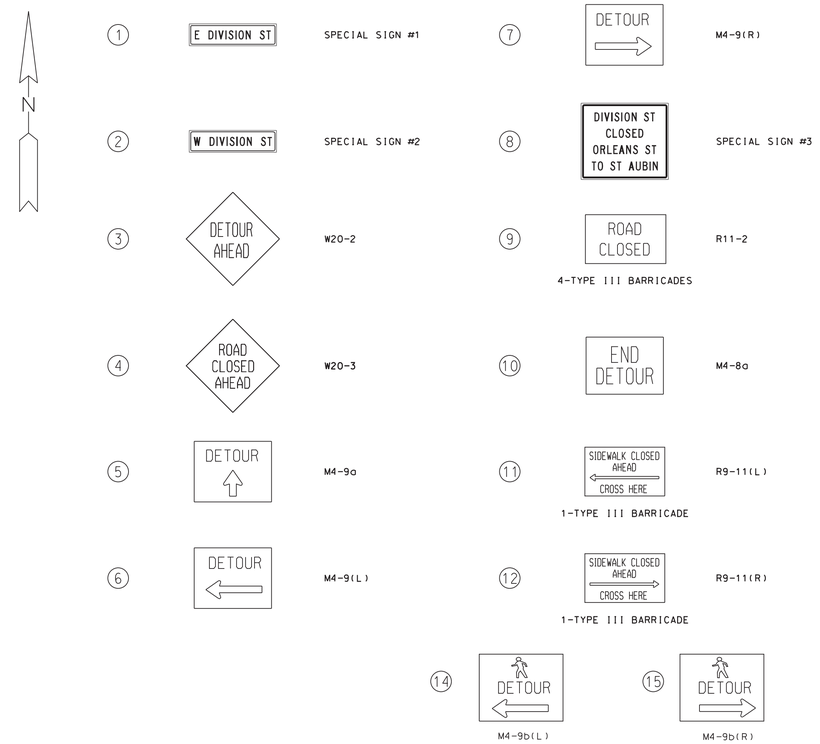

PERMANENT SIGNING

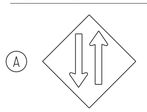

MISCELLANEOUS QUANTITIES

13	SFT	SIGN. TYPE IIIB
28	FT	POST. STEEL. 3LB
2	EA	POST HOLE THROUGH CONC FOR STEEL POST
22	EA	SIGN. TYPE III. REM

DIVISION STREET DETOUR SIGNING QUANTITIES

SIGN			SIZE(in X in)		AREA	TOTAL	TOTAL
DESCRIPTION	CODE	TYPE	IN	IN	SQ FT	QTY	AREA
E DIVISION ST	SPECIAL SIGN #1	B	48	12	4.0	24	96
W DIVISION ST	SPECIAL SIGN #2	B	48	12	4.0	13	52
DETOUR AHEAD	W20-2	B	48	48	16.0	7	112
ROAD CLOSED AHEAD	W20-3	B	48	48	16.0	5	80
DETOUR (STRAIGHT)	M4-9a	B	30	24	5.0	14	70
DETOUR (LEFT)	M4-9(L)	B	30	24	5.0	6	30
DETOUR (RIGHT)	M4-9(R)	B	30	24	5.0	5	25
DIVISION ST CLOSED ORLEANS ST TO ST AUBIN	SPECIAL SIGN #3	B	48	42	14.0	4	56
ROAD CLOSED	R11-2	B	48	30	10.0	2	20
END DETOUR	M4-8a	B	30	24	5.0	3	15
WORK ZONE BEGINS	R5-18c	B	48	48	16.0	2	32
END ROAD WORK	G20-2	B	36	16	4.0	2	8
SIDEWALK CLOSED AHEAD CROSS HERE (LEFT)	R9-11(L)	B	24	12	2.0	2	4
SIDEWALK CLOSED AHEAD CROSS HERE (RIGHT)	R9-11(R)	B	24	12	2.0	2	4
PEDESTRIAN DETOUR (LEFT)	M4-9b(L)	B	30	24	5.0	2	10
PEDESTRIAN DETOUR (RIGHT)	M4-9b(R)	B	30	24	5.0	3	15
SIGN. TYPE B. TEMP. PRISMATIC. FURN						55	426
SIGN. TYPE B. TEMP. PRISMATIC. OPER							428
SIGN. TYPE B. TEMP. PRISMATIC. SPECIAL. FURN						41	224
SIGN. TYPE B. TEMP. PRISMATIC. SPECIAL. OPER							204

		QTY
BARRICADE. TYPE III. HIGH INTENSITY. FURN	EA	12
BARRICADE. TYPE III. HIGH INTENSITY. OPER	EA	12
MINOR TRAF DEVICES	LS	1

MAINTAINING TRAFFIC NOTES

1. ALL TEMPORARY CONSTRUCTION TRAFFIC APPURTENANCES. SUCH AS BARRICADES NECESSARY FOR CONSTRUCTION SHALL CONFORM TO THE 2011 MICHIGAN MANUAL OF UNIFORM TRAFFIC CONTROL DEVICES.
2. ALL CONSTRUCTION APPURTENANCES SHALL BE IN PLACE PRIOR TO THE START OF CONSTRUCTION ACTIVITIES. EXISTING SIGNS IN CONFLICT WITH THE TEMPORARY CONSTRUCTION TRAFFIC SIGNS SHALL BE COVERED OR TEMPORARILY RESET OR REMOVED AND STOCKPILED DURING CONSTRUCTION.
3. THE CONTRACTOR SHALL NOTIFY THE CITY OF DETROIT POLICE AND FIRE DEPARTMENTS IN WRITING A MINIMUM OF TEN WORKING DAYS PRIOR TO THE START OF CONSTRUCTION ON ANY ROAD CLOSURES.
4. LOCAL STREETS ADJACENT TO THE CONSTRUCTION AREA SHALL NOT BE USED BY THE CONTRACTOR FOR EQUIPMENT AND MATERIAL STORAGE.
5. THE CONTRACTOR SHALL SUBMIT A PLAN TO THE ENGINEER FOR APPROVAL. FOR TRUCK OR HAUL ROUTES TO BE USED DURING CONSTRUCTION.
6. THE CONTRACTOR SHALL NOTIFY ADJACENT BUSINESSES IN WRITING A MINIMUM OF TEN WORKING DAYS PRIOR TO PAVEMENT REMOVAL OR ANY PLANNED CONSTRUCTION THAT MAY LIMIT OR TEMPORARILY ELIMINATE ACCESS TO THEIR PROPERTY.
7. ALL CONSTRUCTION ACTIVITIES SHALL TAKE PLACE BETWEEN THE HOURS OF 7:00 A.M. AND 7:00 P.M. MONDAY THROUGH SATURDAY. NO CONSTRUCTION ACTIVITIES. INCLUDING PAVEMENT SAW CUTTING WILL BE ALLOWED ON SUNDAYS. AND MONDAY THROUGH SATURDAY BETWEEN THE HOURS OF 7:00 P.M. AND 7:00 A.M. THE CONTRACTOR MAY REQUEST AN EXTENSION OF WORK HOURS. ANY EXTENSION OF WORK HOURS IS AT THE DISCRETION OF THE CITY OF DETROIT. CITY ENGINEERS OFFICE.
8. PLACE R5-18c AND G20-2 AT ORLEANS AND ST. AUBIN AS DIRECTED BY THE ENGINEER

D3-1;
1.63" Radius, 0.38" Border, 0.63" Indent, Black on Orange;
[E DIVISION ST] C;

SPECIAL SIGN #1 DETAIL

D3-1;
1.63" Radius, 0.38" Border, 0.63" Indent, Black on Orange;
[W DIVISION ST] C;

SPECIAL SIGN #2 DETAIL

W-VAR:
1.6" Radius, 0.9" Border, 0.6" Indent, Black on Orange;
[DIVISION] C; [ST] C;
[CLOSED] C;
[ORLEANS] C; [ST] C;
[TO] C; [ST] C; [AUBIN] C;

SPECIAL SIGN #8 DETAIL

LEGEND

- DETOUR ROUTE
- (1) SIGN CLUSTER NUMBER
- TYPE III BARRICADE
- WORK ZONE
- ONE-WAY STREET (FLOW OF TRAFFIC)

REV#	DATE	DESCRIPTION	BY

NOT VALID FOR CONSTRUCTION UNLESS SIGNED AND DATED.

WADETRIM
500 Griswold, Suite 2500
Detroit, MI 48226
313.961.3650
Fax 313.961.8996
www.wadetrim.com
Building relationships on a foundation of excellence

CITY OF DETROIT
DEPARTMENT OF PUBLIC WORKS
CITY ENGINEERING DIVISION
DIVISION ST. OVER DEQUINDRE CUT S.N. 124467
DETOUR PLAN

ISSUED FOR: DATE: BY:

JOB NO. DTE 2025-10T

SHEET 2 (442)

DIVISION STREET BRIDGE

© Wade Trim Group, Inc.

PROJECT MANAGER: -
FIELD BOOK INFORMATION: -
c:\pw_work\d0356109\CRP-PLTS-DivisionDetour.dgn
PLOTTED 5/21/2013 9:46:05 AM BY mszczycko

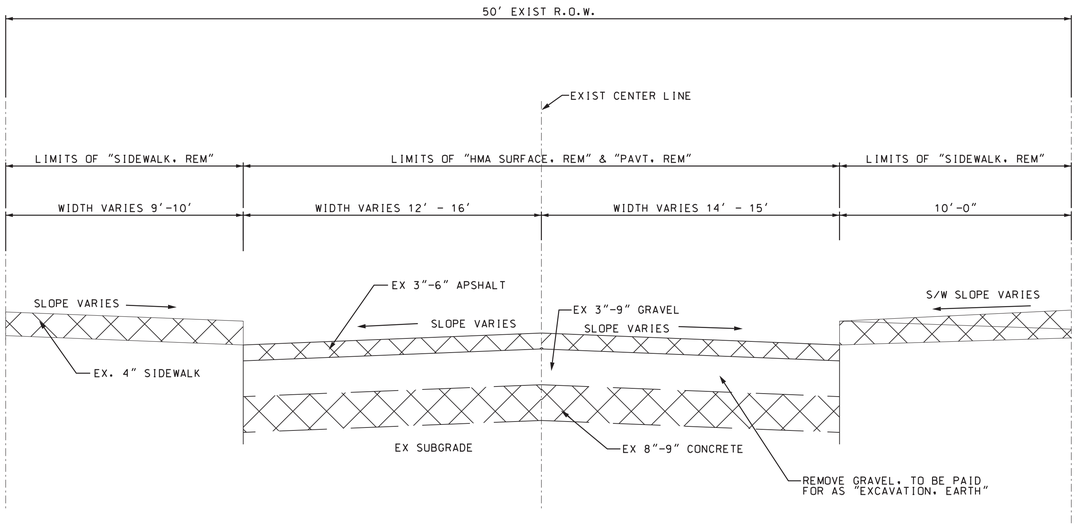

EXISTING TYPICAL CROSS SECTION

STA 3+35.00 TO STA 5+08.94

PROJECT MANAGER: -
FIELD BOOK INFORMATION: -
c:\pw_work\d0369109\CTP-PLTS-ExistingTypicals.dgn
PLOTTED 5/21/2013 9:47:51 AM BY mzarzycka

REV#	DATE	DESCRIPTION	BY

NOT VALID FOR CONSTRUCTION UNLESS SIGNED AND DATED.

WADE TRIM
500 Griswold, Suite 2500
Detroit, MI 48226
313.961.3650
FAX 313.961.8666
www.wadetrim.com

Building relationships on a foundation of excellence

CITY OF DETROIT
DEPARTMENT OF PUBLIC WORKS
CITY ENGINEERING DIVISION
DIVISION ST. OVER DEQUINDRE CUT S.N. 12467
EXISTING ROAD TYPICAL

ISSUED FOR: DATE: BY:

JOB NO. DTE 2025-10T

SHEET 3 (443)

DIVISION STREET BRIDGE

© Wade Trim Group, Inc.

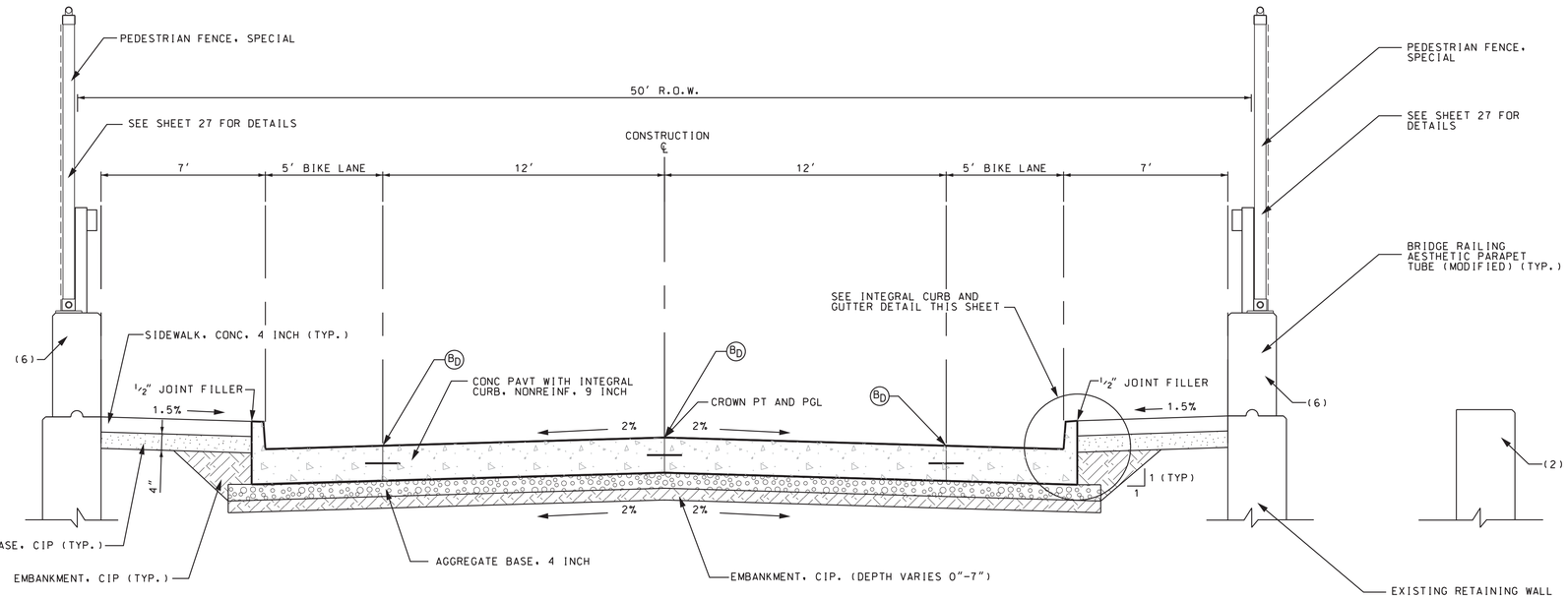

PROPOSED TYPICAL PAVEMENT SECTION

STA 3+35.00 TO STA 5+08.94
NOT TO SCALE

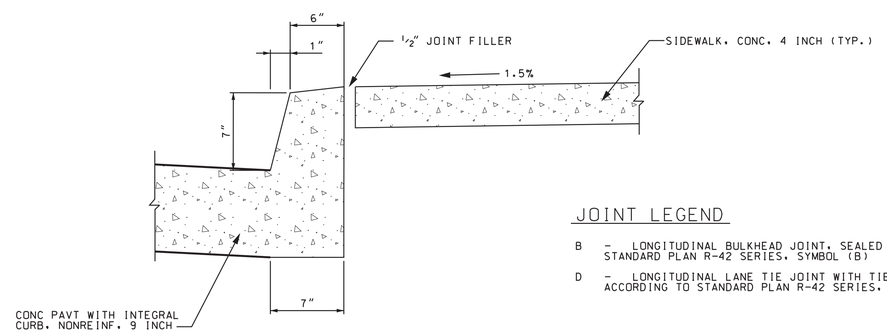

INTEGRAL CURB AND GUTTER DETAIL

NOTES:

(1) NO BARRIER, FLUSH WITH GRADE STA 3+35.00 TO STA 3+49.16 AND STA 4+51.58 TO STA 5+08.94

(2) NO BARRIER, FLUSH WITH GRADE STA 3+35.00 TO STA 3+64.03 AND STA 4+58.25 TO STA 5+08.94

(3) EXIST RETAINING WALL W/ 3'-8 1/2" BARRIER STA 3+49.16 TO STA 3+63.25

(4) PRECAST WALL W/ 3'-8 1/2" BARRIER STA 3+64.03 TO STA 3+74.75 AND STA 4+43.25 TO STA 4+58.25

(5) PRECAST WALL W/ 3'-8 1/2" BARRIER STA 3+63.25 TO STA 3+74.75 AND STA 4+43.25 TO STA 4+51.58

(6) @ BRIDGE - AESTHETIC PARAPET TUBE W/ PEDESTRIAN FENCE STA 3+74.75 TO STA 4+43.25

JOINT LEGEND

B - LONGITUDINAL BULKHEAD JOINT, SEALED ACCORDING TO STANDARD PLAN R-42 SERIES, SYMBOL (B)

D - LONGITUDINAL LANE TIE JOINT WITH TIE BARS, SEALED ACCORDING TO STANDARD PLAN R-42 SERIES, SYMBOL (D)

REV#	DATE	DESCRIPTION	BY

NOT VALID FOR CONSTRUCTION UNLESS SIGNED AND DATED.

WADE TRIM
500 Griswold, Suite 2500
Detroit, MI 48226
313.961.3650
FAX 313.961.0998
www.wadetrim.com

Building relationships on a foundation of excellence

CITY OF DETROIT
DEPARTMENT OF PUBLIC WORKS
CITY ENGINEERING DIVISION
DIVISION ST. OVER DEQUINDRE CUT S.N. 12467
TYPICAL PAVEMENT SECTION

ISSUED FOR: DATE: BY:

DIVISION STREET BRIDGE

JOB NO. DTE 2025-10T

SHEET 4 (444)

© Wade Trim Group, Inc.

PROJECT MANAGER: -
c:\pw_work\d0369109\CPT-PLTS-ProposedTypicalSection.dgn
FIELD BOOK INFORMATION: -
PLOTTED 5/21/2013 9:49:56 AM BY mzoryzko

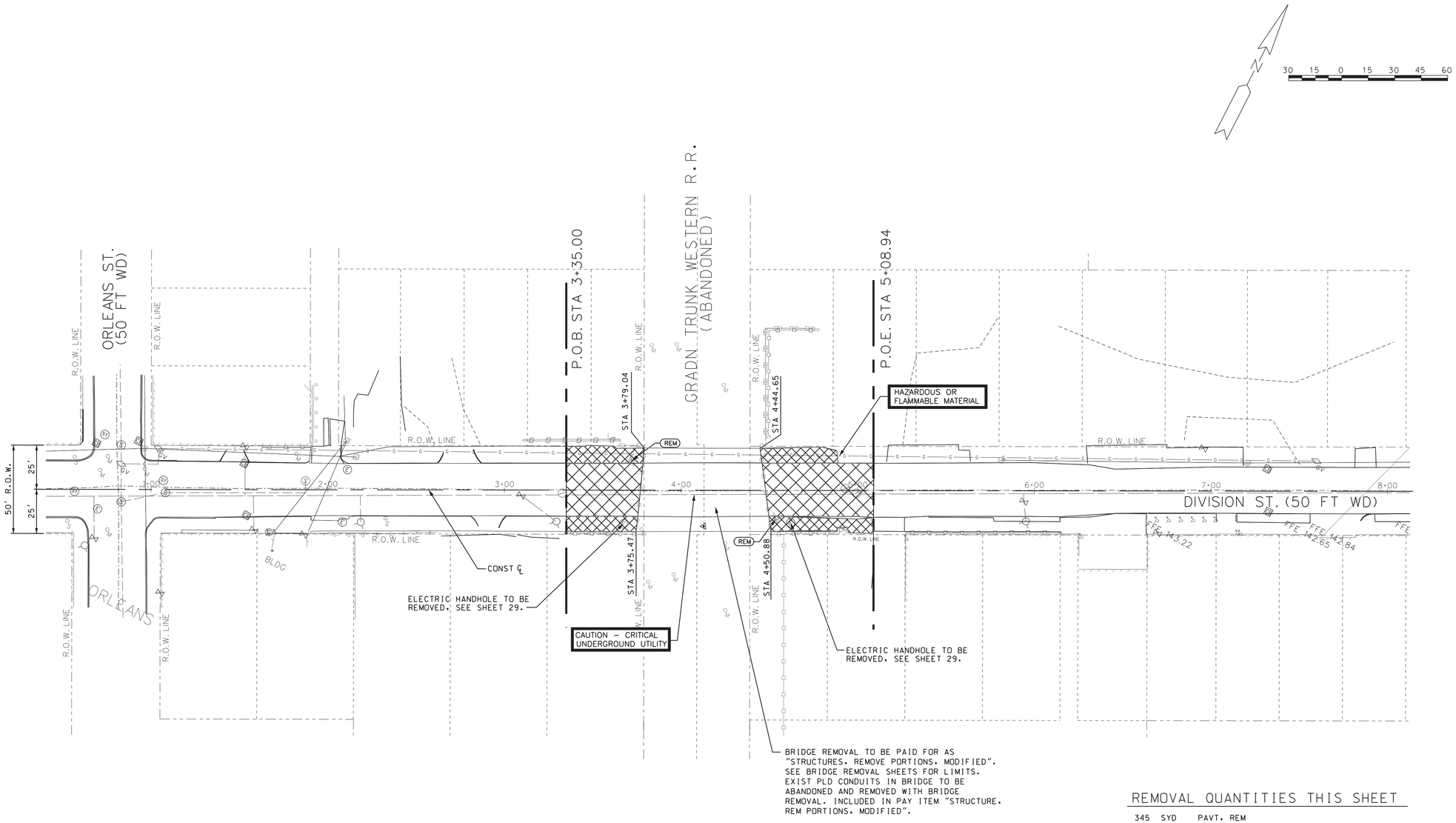

BRIDGE REMOVAL TO BE PAID FOR AS "STRUCTURES. REMOVE PORTIONS. MODIFIED". SEE BRIDGE REMOVAL SHEETS FOR LIMITS. EXIST PLD CONDUITS IN BRIDGE TO BE ABANDONED AND REMOVED WITH BRIDGE REMOVAL. INCLUDED IN PAY ITEM "STRUCTURE. REM PORTIONS. MODIFIED".

REMOVAL QUANTITIES THIS SHEET

345	SYD	PAVT. REM
180	SYD	SIDEWALK. REM
345	SYD	HMA SURFACE. REM
439	CYD	EXCAVATION. EARTH

SIDEWALK. REM

HMA SURFACE. REM AND PAVT. REM

NOTES:

THE EXISTING CONCRETE PAVEMENT SHALL BE SAWED FULL DEPTH AND REMOVED IN A MANNER AS TO NOT DISRUPT OR DAMAGE EXISTING BUILDINGS. NO IMPACT TYPE EQUIPTMENT SHALL BE USED.

SEE SHEET 29 FOR WATER MAIN REMOVAL AND REPLACEMENT.

Know what's **below.**
Call before you dig.

REV'#	DATE	DESCRIPTION	BY

NOT VALID FOR CONSTRUCTION UNLESS SIGNED AND DATED.

WADE TRIM

500 Griswold, Suite 2500
Detroit, MI 48226
313.961.3650
FAX 313.961.0998
www.wadetrim.com

Building relationships on a foundation of excellence

CITY OF DETROIT
DEPARTMENT OF PUBLIC WORKS
CITY ENGINEERING DIVISION
DIVISION ST. OVER DEQUINDRE CUT S.N. 12467
ROAD REMOVAL PLAN

ISSUED FOR: DATE: BY:

JOB NO. DTE 2025-10T

SHEET 5 (445)

DIVISION STREET BRIDGE

© Wade Trim Group, Inc.

PROJECT MANAGER: -
FIELD BOOK INFORMATION: -
c:\pw_work\d0369109\CRP-PLTS-RoadRemovalPlan.dgn
PLOTTED 5/21/2013 9:51:53 AM BY mzarzycki

BENCHMARKS

BM*6: ARROW ON FIRST FIRE HYDRANT ON SOUTH SIDE OF DIVISION WEST OF BRIDGE
EL. 150.36

BM*7: ARROW ON FIRE HYDRANT ATSOUTH WEST CORNER OF DIVISION AND ORLEANS
EL. 144.45

BM*12: STREET SIGN ON EAST SIDE OF ST. AUBIN STREET ACROSS FROM SOUTH WEST CORNER OF DIVISION
EL. 142.79

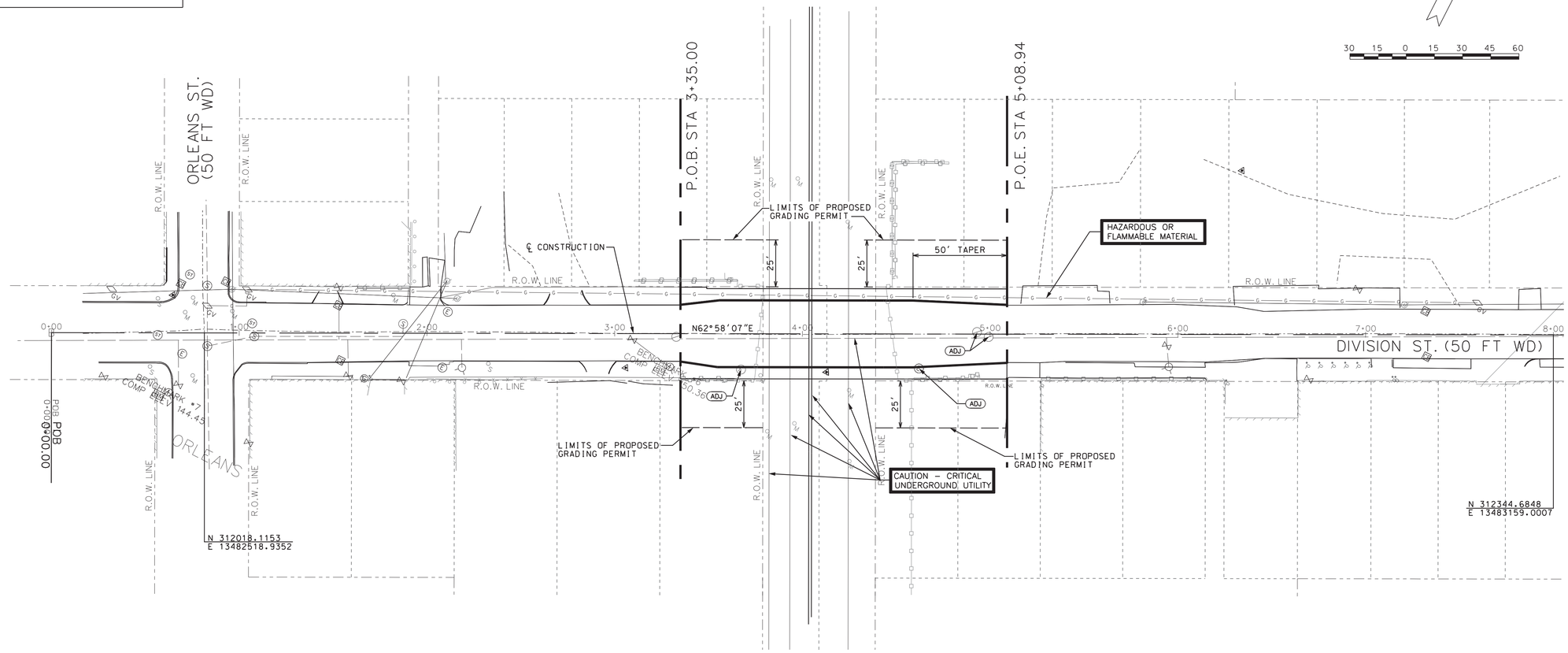

CONSTRUCTION QUANTITIES THIS SHEET

266	CYD	EMBANKMENT, CIP
30	CYD	SUBBASE, CIP
230	SYD	AGGREGATE BASE, 4 INCH
230	SYD	CONC PAVT WITH INTEGRAL CURB, NONREINF, 9 INCH
470	FT	JOINT CONTRACTION, CP
2415	SFT	SIDEWALK, CONC, 4 INCH
2	EA	GATE BOX, ADJ, CASE 1
2	EA	HH, ADJ
2	STA	MACHINE GRADING

Know what's **below.**
Call before you dig.

PROJECT MANAGER: -
FIELD BOOK INFORMATION: -
c:\pw_work\d0369103\CPP-PLTS-RoadConstructionPlan.dgn
PLOTTED 5/21/2013 9:53:38 AM BY mszarzyko

REV.#	DATE	DESCRIPTION	BY

NOT VALID FOR CONSTRUCTION UNLESS SIGNED AND DATED:

WADETRIM
500 Griswold, Suite 2500
Detroit, MI 48226
313.961.3650
313.961.3551 (fax)
www.wadetrim.com

Building relationships on a foundation of excellence

CITY OF DETROIT
DEPARTMENT OF PUBLIC WORKS
CITY ENGINEERING DIVISION
DIVISION ST. OVER DEQUINDRE CUT S.N. 12467
ROAD CONSTRUCTION PLAN

ISSUED FOR: DATE: BY:

JOB NO. DTE 2025-10T

SHEET 6 (446)

DIVISION STREET BRIDGE

© Wade Trim Group, Inc.

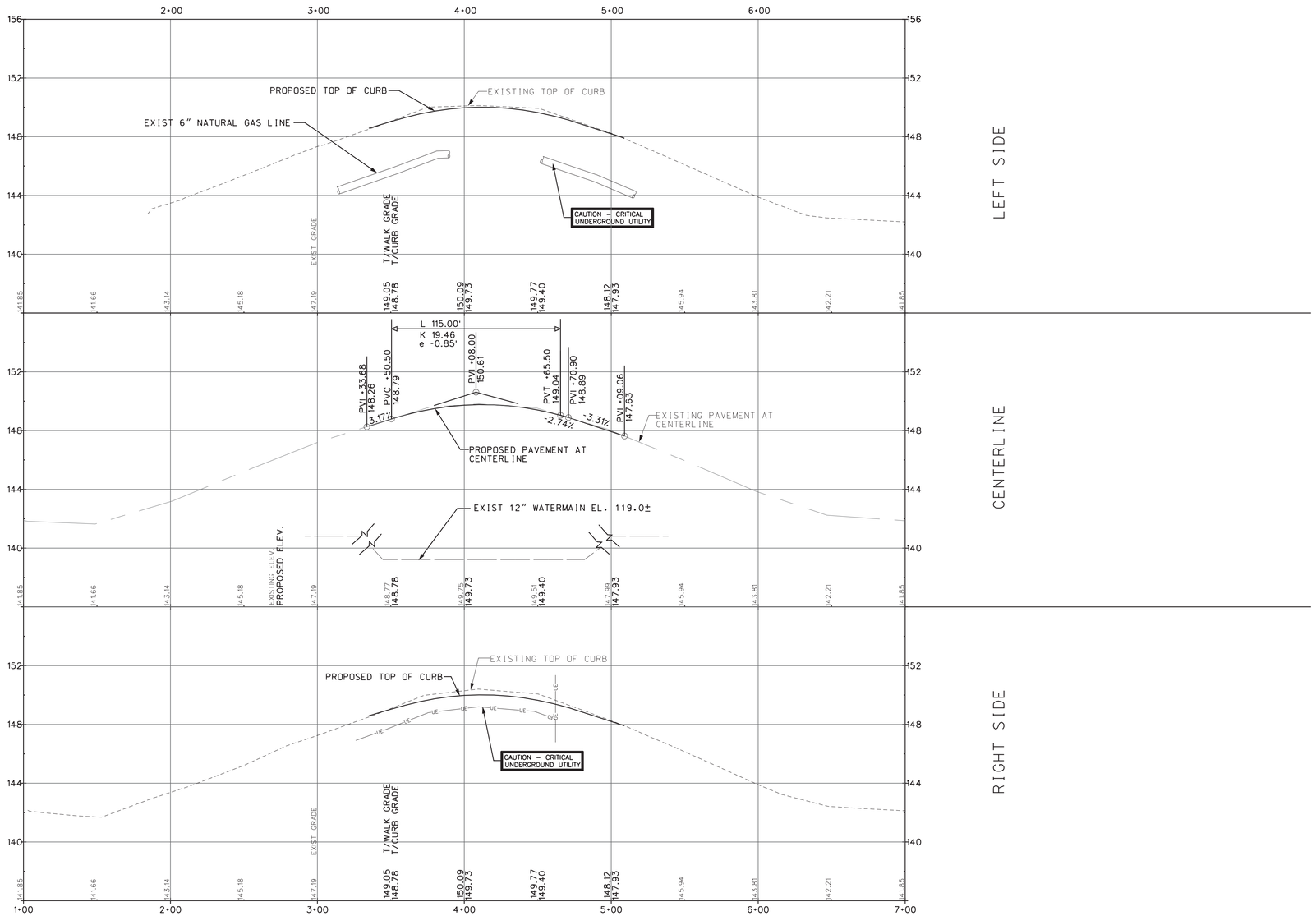

SCALE
1" = 4' VERT
1" = 40' HORIZ

REV'#	DATE	DESCRIPTION	BY

NOT VALID FOR CONSTRUCTION UNLESS SIGNED AND DATED:

WADETRIM
500 Griswold, Suite 2500
Detroit, MI 48226
313.961.3650
313.961.3080 FAX
www.wadetrim.com

Building relationships on a foundation of excellence

CITY OF DETROIT
DEPARTMENT OF PUBLIC WORKS
CITY ENGINEERING DIVISION
DIVISION ST. OVER DEQUINDRE CUT S.N. 12467
ROAD PROFILE PLAN

ISSUED FOR: DATE: BY:

JOB NO. DTE 2025-10T

SHEET 7 (447)

DIVISION STREET BRIDGE

© Wade Trim Group, Inc.

PROJECT MANAGER: - FIELD BOOK INFORMATION: -
c:\pw_work\d0363193\CPS-PLTS-ConstructionProfileSheet.dgn
PLOTTED 5/21/2013 9:55:46 AM BY mzoryzyko

BENCHMARKS

BM•6: ARROW ON FIRST FIRE HYDRANT ON SOUTH SIDE OF DIVISION WEST OF BRIDGE
EL. 150.36

BM•7: ARROW ON FIRE HYDRANT ATSOUTH WEST CORNER OF DIVISION AND ORLEANS
EL. 144.45

BM•12: STREET SIGN ON EAST SIDE OF ST. AUBIN STREET ACROSS FROM SOUTH WEST CORNER OF DIVISION
EL. 142.79

EXISTING STRUCTURE

EXISTING BRIDGE IS A 2-SPAN, CONCRETE ENCASED STEEL BEAM WITH CONCRETE DECK, CINDER FILL AND CONCRETE SURFACE AND HMA OVERLAY. THERE ARE CONCRETE PIERS AND ABUTMENTS ON ASSUMED SPREAD FOOTINGS. THE ORIGINAL BRIDGE WAS CONSTRUCTED APPROXIMATELY 1930.

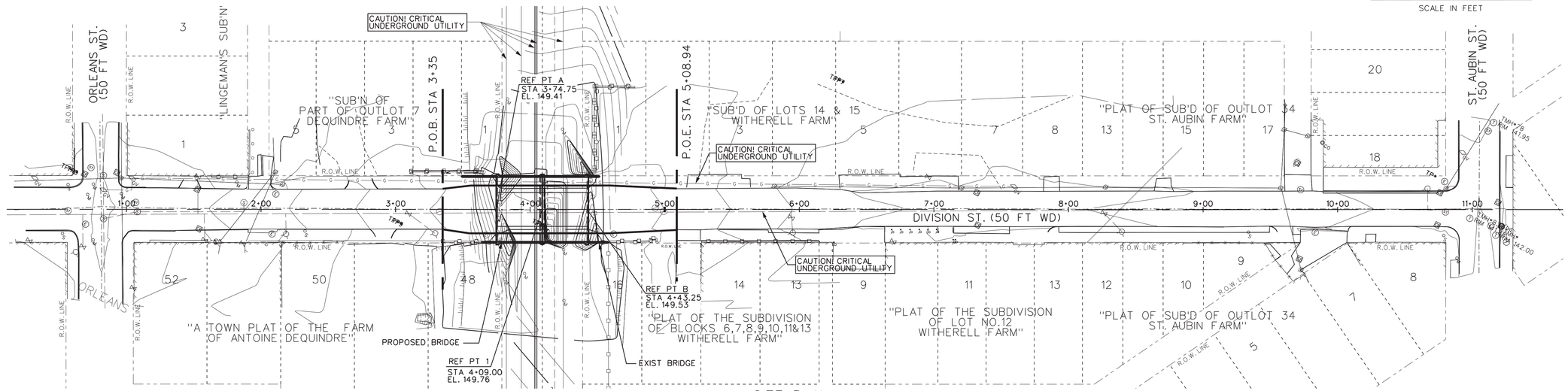

SITE PLAN
SCALE: 1"=40'

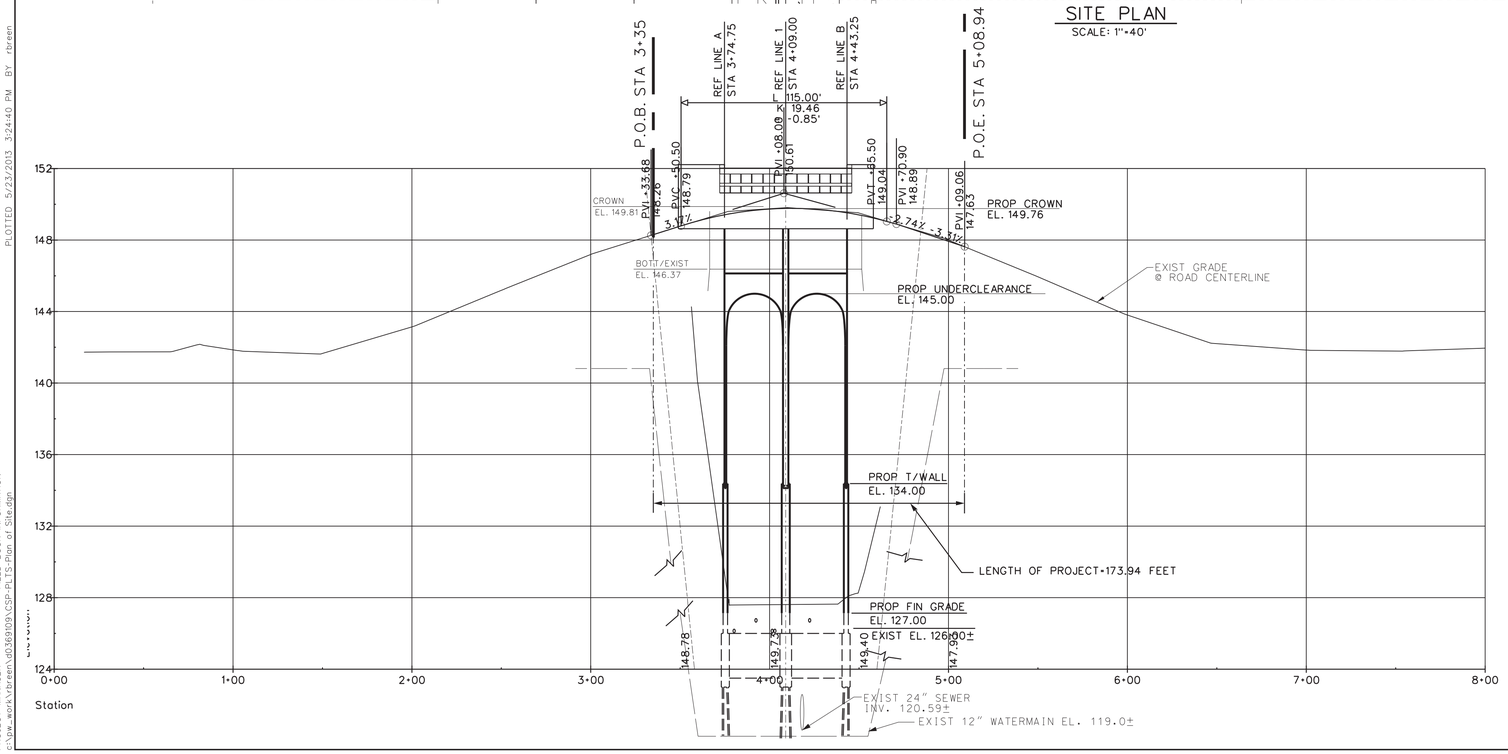

PROFILE
SCALE: VERT 1"=4' HORZ 1"=40'

NOTES

THE WORK COVERED BY THESE PLANS INCLUDES REMOVAL OF EXISTING BRIDGE, MAINTAINING TRAFFIC, CONSTRUCTION OF THE PROPOSED BRIDGE AND APPROACHES TO THE LIMITS SHOWN.

THE CONTRACTOR SHALL LOCATE ALL ACTIVE UNDERGROUND UTILITIES PRIOR TO STARTING WORK AND SHALL CONDUCT HIS OPERATIONS IN SUCH A MANNER AS TO ENSURE THAT THOSE UTILITIES NOT REQUIRING RELOCATION WILL NOT BE DISTURBED.

DIVISION ST. TRAFFIC IS TO BE DETOURED OVER OTHER EXISTING ROADS.

PLAN ELEVATIONS REFER TO CITY OF DETROIT DATUM.

DTE ELECTRIC AND GAS SHALL BE RELOCATED BY OTHERS. CONTRACTOR SHALL COORDINATE HIS WORK WITH THEIR ACTIVITIES.

REV'•	DATE	DESCRIPTION	BY

NOT VALID FOR CONSTRUCTION UNLESS SIGNED AND DATED.

WADE TRIM
500 Griswold, Suite 2500
Detroit, MI 48226
313.961.3650
FAX 313.961.0998
www.wadetrim.com

Building relationships on a foundation of excellence

CITY OF DETROIT
DEPARTMENT OF PUBLIC WORKS
CITY ENGINEERING DIVISION
DIVISION ST. OVER DEQUINDRE CUT S.N. 124467
PLAN OF SITE

ISSUED FOR: DATE: BY:

DIVISION STREET BRIDGE

JOB NO. DTE 2025-10T

SHEET 8 (448)

© Wade Trim Group, Inc.

PLOTTED 5/23/2013 3:24:40 PM BY rbreen

FIELD BOOK INFORMATION: -

PROJECT MANAGER: -
c:\pw_work\rbreen\d036909\CSP-PLTS-Plan of Site.dgn

TEST BORING NO. B-01
GROUND SURFACE EL. 150 FT DCD
(ESTIMATED FROM EXISTING DRAWINGS)

Elev.	Blows	Qu	Description
150.0			4 inches of ASPHALTIC CEMENT CONCRETE
149.6			9 inches of PORTLAND CEMENT CONCRETE
148.8	3 4 7	16.4 3500*PP	
149.0	2 2 3	19.5 2000*PP	FILL - Stiff silty clay, some sand, trace to SOME gravel and cinders, brown/dark brown/black (CL)
146.5	5 3 2		
143.5			FILL - Loose to very loose gravelly medium to coarse sand, trace to some silt, brown, moist (SPG)
144.0	1 2 2		
141.5			
137.0	5 11 18	12.8 9000+*PP	
136.5			Hard to very stiff SILTY CLAY, trace to some sand, trace gravel, occasional silty fine sand seams, brown (CL)
131.5	7 12 24	16.1 6500*PP	
130.0			Stiff to soft SILTY CLAY, trace sand and gravel, gray (CL)
126.5	3 5 8	15.6 3320	
			BOTT/FOOTING ABUTMENT (B/EAST) EL 123.0
121.5	2 4 4	17.4 1400#TV	
116.5	2 3 3	17.3 1200#TV	
111.5	1 2 3	17.7 600#TV	
106.5	0 2 3	17.5 800#TV	
			MINIMUM PILE PENETRATION EL. 103.00 HP 12X53
101.5	1 2 3	17.5 1000#TV	
96.5	1 2 3	21.6 4000#TV	
91.5	2 3 3	18.8 800#TV	
86.5	1 3 4	17.8 1000#TV	
81.5	1 3 3	18.2 1400#TV	
76.5	2 3 4	18.1 1400#TV	
71.5	2 4 5	18.6 800#TV	

TEST BORING NO. B-01 (CONTINUED)

Elev.	Blows	Qu	Description
66.5	1 3 4	21.7 1200#TV	
			Stiff to soft SILTY CLAY, trace sand and gravel, gray (CL)
61.5	1 4 4	38.2 560	
56.5	3 3 4	25.7 800#TV	
51.5	0 2 4	21.2 800#TV	
46.5	0 5 6	22.1 1200#TV	
41.5	0 5 6	21.6 1200#TV	
36.5	2 4 7	20.9 1000#TV	
31.5	4 5 7	22.1 1200#TV	
26.5	3 8 8	21.2 1400#TV	
21.5	2 5 7	23.9 1200#TV	
16.5	2 5 7	26.1 1200#TV	
11.5	3 7 8	24.4 1400#TV	
6.5	6 4 8	26.3 1000#TV	
4.0			
1.5	62 100/4"	9.3 9000+*PP	
-3.5	73 100/4"	11.0 9000+*PP	Hard SILTY SANDY CLAY, trace gravel occasional clayey silt seams below 155 ft, gray (CL)
			EXTIMATED PILE TIP ELEVATION HP 12X53 NOMINAL RESISTANCE = 350K EL. -6.0
-8.5	18 30 53	14.3 8000*PP	
-13.5			

NOTES:
NO GROUNDWATER ENCOUNTERED DURING DRILLING

GROUNDWATER WAS NOT REPORTED UPON COMPLETION OF DRILLING DUE TO WASH ROTARY DRILLING METHODS

BORING TERMINATED AT A DEPTH OF 163.5 FEET BELOW EXISTING GRADE (EL. MINUS 13.5 FEET DCD). BORING TERMINATED ON POSSIBLE BEDROCK.

DRILL RIG: CME 55/CME 75 (AUTOMATIC HAMMER)
DRILL METHOD: 2¼INCH HSA/WR
BACKFILLED WITH: GROUT & PATCH

DATE STARTED: 03-12-13
DATE COMPLETED: 03-13-13

ENGINEER ON RIG: S.SWAMINATHAN/K.BROWN

LEGEND:

APPROXIMATE SOIL BORING LOCATION

LOCATION PLAN

1ST 6 inch 13
2ND 6 inch 16
3RD 6 inch 14
% MC
UCS (PSF)

NUMBERS IN CIRCLES DENOTE NUMBER OF BLOWS REQUIRED TO DRIVE A 2 inch O.D. (1*2 inch I.D.) SPLIT SPOON SAMPLER 3 SUCCESSIVE 6 inch INCREMENTS USING A 140 LB HAMMER FALLING 2.5 ft.

LABORATORY AND FIELD TEST RESULTS SHOWN INDICATE:

MC - MOISTURE CONTENT (PERCENT)
UCS - UNCONFINED COMPRESSIVE STRENGTH LABORATORY DETERMINED POUNDS/SQ.FT (PSF)
•PP UNCONFINED COMPRESSIVE STRENGTH USING POCKET PENETROMETER POUNDS/SQ.FT (PSF)
*TV UNCONFINED COMPRESSIVE STRENGTH USING TORVANE TEST POUNDS/SQ.FT (PSF)
< > DISTURBED SAMPLE

NR NO RECOVERY

37/0" WHERE THE SAMPLER IS DRIVEN DISTANCES OTHER THAN 18 inches, THE DISTANCE IS SHOWN IN THE CIRCLE WITH THE NUMBER OF BLOWS IN THE FORM OF A FRACTION. (DISTANCE IS IN INCHES).

CONSISTENCY WAS DETERMINED BY INSPECTION OF SAMPLES AND SUBSTANTIATED BY SOIL RESISTANCE TO DRILLING TOOLS (CASING OR AUGER). UNIFIED SOIL CLASSIFICAITON SYSTEM (USCS) GROUP SYMBOL DETERMINED PER ASTM VISUAL-MANUAL PROCEDURES.

THE SOIL BORING LOGS REPRESENT POINT INFORMATION. PRESENTATION OF THIS INFORMATION IN NO WAY IMPLIES THAT THE SUBSURFACE CONDITIONS ARE THE SAME AT LOCATIONS OTHER THAN THE EXACT LOCATION OF THE BORING.

GROUNDWATER LEVELS REPRESENT THE CONDITIONS AT THE TIME THE MEASUREMENTS WERE OBTAINED AND SHOULD BE EXPECTED TO FLUCTUATE THROUGHOUT THE YEAR. GROUNDWATER LEVELS MAY ALSO BE INFLUENCED BY RESIDUAL BORING WATER.

Somat Engineering, INCORPORATED

REV.#	DATE	DESCRIPTION	BY

NOT VALID FOR CONSTRUCTION UNLESS SIGNED AND DATED.

WADE TRIM
500 Griswold, Suite 2500
Detroit, MI 48226
313.961.3650
FAX 313.961.9998
www.wadetrim.com

Building relationships on a foundation of excellence

CITY OF DETROIT
DEPARTMENT OF PUBLIC WORKS
CITY ENGINEERING DIVISION
DIVISION ST. OVER DEQUINDRE CUT S.N. 124467
LOG OF BORING

ISSUED FOR: DATE: BY:

JOB NO. DTE 2025-10T

SHEET 9 (449)

DIVISION STREET BRIDGE

© Wade Trim Group, Inc.

PROJECT MANAGER: - FIELD BOOK INFORMATION: -
c:\pw_work\d0369109\CSB-PLTS-SoilBoringLog1.dgn
PLOTTED 5/21/2013 9:59:39 AM BY mszczycko

TEST BORING NO. B-02
GROUND SURFACE EL. 128 FT DCD
(ESTIMATED FROM EXISTING DRAWINGS)

Elev.	Blows	Qu	Description
128.0			Field Engineer reported 12 inches of brown silty sand FILL (Noted to be frozen)
127.0	5 4 4	14.7 6000*PP	FILL – Very stiff silty sandY clay, trace gravel, dark brown (CL)
127.0	1 4 5	13.5 8500*PP	Hard to stiff SILTY CLAY, trace sand and gravel, gray (CL)
124.5	2 4 5	16.1 3500*PP	BOTT/FOOTING PIER 1 EL 123.0
122.0	4 5 6	19.9 4050	
119.5			
118.0			
114.5	2 3 4	18.1 1200#TV	
109.5	6 5 7	15.4 1200#TV	Medium SILTY CLAY, trace sand and gravel, silty sandy clay layer at about 30 ft., gray (CL)
104.5	2 3 4	17.3 1000#TV	MINIMUM PILE PENETRATION EL. 103.00 HP 12X53
99.5	7 6 6	13.1 <>	
98.0			
94.5	4 6 6		Medium dense MEDIUM TO COARSE SAND, trace to some gravel, trace silt, gray, wet (SP)
89.0	3 3 5	18.2 1000#TV	
89.5			
84.5	3 3 4	17.7 1200#TV	
79.5	3 6 6	17.1 1400#TV	
74.5	3 4 4	17.6 1200#TV	Medium to soft SILTY CLAY, trace sand and gravel, gray (CL)
69.5	2 4 5	20.9 1000#TV	
64.5	1 4 4	21.5 1200#TV	
59.5	0 3 4	35.5 800#TV	
49.5	0 2 3	22.9 800#TV	

TEST BORING NO. B-02 (CONTINUED)

Elev.	Blows	Qu	Description
39.5	2 4 6	19.3 1000#TV	
			Medium to soft SILTY CLAY, trace sand and gravel, gray (CL)
29.5	2 4 6	20.9 1600#TV	
19.5	3 6 6	18.9 1300	
9.0	16 18 12		
9.5			Dense SANDY SILT, trace clay, gray, moist (ML)
4.5	2 8 10	30.8 1400#TV	Medium SILTY CLAY, trace sand and gravel, gray (CL)
3.0			
−0.5	90	9.2 <>	
−5.5	87 100	10.1 <>	Hard SILTY SANDY CLAY, trace gravel, occasional clayey silt layers, gray (CL)
			EXTIMATED PILE TIP ELEVATION HP 12X53 NOMINAL RESISTANCE = 350K EL. -7.0
−10.5	24 42 67	14.3 8500*PP	
−15.5	72 70 95	8.6 9000+*PP	
−17.5			

NOTES:
GROUNDWATER ENCOUNTERED AT DEPTH 30 FT DURING DRILLING

GROUNDWATER WAS NOT REPORTED UPON COMPLETION OF DRILLING DUE TO WASH ROTARY DRILLING METHODS

BORING TERMINATED AT A DEPTH OF 145.7 FEET BELOW EXISTING GRADE (EL. MINUS 17.7 FEET DCD). BORING TERMINATED ON POSSIBLE BEDROCK.

DRILL RIG: CME 55 (AUTOMATIC HAMMER)
DRILL METHOD: 2¼INCH HSA/WR
BACKFILLED WITH: GROUT & PATCH

DATE STARTED: 03-05-13
DATE COMPLETED: 03-05-13

ENGINEER ON RIG: S.SWAMINATHAN

LEGEND:

APPROXIMATE SOIL BORING LOCATION

LOCATION PLAN

1ST 6 inch 13
2ND 6 inch 16
3RD 6 inch 14
% MC
UCS (PSF)

NUMBERS IN CIRCLES DENOTE NUMBER OF BLOWS REQUIRED TO DRIVE A 2 inch O.D. (1*2 inch I.D.) SPLIT SPOON SAMPLER 3 SUCCESSIVE 6 inch INCREMENTS USING A 140 LB HAMMER FALLING 2.5 ft.

LABORATORY AND FIELD TEST RESULTS SHOWN INDICATE:

MC - MOISTURE CONTENT (PERCENT)
UCS - UNCONFINED COMPRESSIVE STRENGTH LABORATORY DETERMINED POUNDS/SQ.FT (PSF)
•PP UNCONFINED COMPRESSIVE STRENGTH USING POCKET PENETROMETER POUNDS/SQ.FT (PSF)
*TV UNCONFINED COMPRESSIVE STRENGTH USING TORVANE TEST POUNDS/SQ.FT (PSF)
< > DISTURBED SAMPLE

NR NO RECOVERY

37/0" WHERE THE SAMPLER IS DRIVEN DISTANCES OTHER THAN 18 inches, THE DISTANCE IS SHOWN IN THE CIRCLE WITH THE NUMBER OF BLOWS IN THE FORM OF A FRACTION. (DISTANCE IS IN INCHES).

CONSISTENCY WAS DETERMINED BY INSPECTION OF SAMPLES AND SUBSTANTIATED BY SOIL RESISTANCE TO DRILLING TOOLS (CASING OR AUGER). UNIFIED SOIL CLASSIFICAITON SYSTEM (USCS) GROUP SYMBOL DETERMINED PER ASTM VISUAL-MANUAL PROCEDURES.

THE SOIL BORING LOGS REPRESENT POINT INFORMATION. PRESENTATION OF THIS INFORMATION IN NO WAY IMPLIES THAT THE SUBSURFACE CONDITIONS ARE THE SAME AT LOCATIONS OTHER THAN THE EXACT LOCATION OF THE BORING.

GROUNDWATER LEVELS REPRESENT THE CONDITIONS AT THE TIME THE MEASUREMENTS WERE OBTAINED AND SHOULD BE EXPECTED TO FLUCTUATE THROUGHOUT THE YEAR. GROUNDWATER LEVELS MAY ALSO BE INFLUENCED BY RESIDUAL BORING WATER.

Somat Engineering, INCORPORATED

REV.#	DATE	DESCRIPTION	BY

NOT VALID FOR CONSTRUCTION UNLESS SIGNED AND DATED.

WADE TRIM
500 Griswold, Suite 2500
Detroit, MI 48226
313.961.3650
Fax 313.961.9986
www.wadetrim.com

Building relationships on a foundation of excellence

CITY OF DETROIT
DEPARTMENT OF PUBLIC WORKS
CITY ENGINEERING DIVISION
DIVISION ST. OVER DEQUINDRE CUT S.N. 124467
LOG OF BORING

ISSUED FOR: DATE: BY:

JOB NO. DTE 2025-10T

SHEET 10 (450)

DIVISION STREET BRIDGE

© Wade Trim Group, Inc.

PROJECT MANAGER: - FIELD BOOK INFORMATION: -
c:\pw_work\d0369109\CSB-PLTS-SoilBoringLog2.dgn
PLOTTED 5/21/2013 10:01:04 AM BY mszarzycka

TEST BORING NO. B-03
GROUND SURFACE EL. 150 FT DCD
(ESTIMATED FROM EXISTING DRAWINGS)

Elevation	Blows	Qu (tsf)	Description
150.0			6 inches of ASPHALTIC CEMENT CONCRETE
149.5	7 10 12		11 inches of PORTLAND CEMENT concrete
149.1			FILL - Medium dense medium to coarse sand, trace to some silt, clay and gravel, trace brick pieces, brown, moist (SP/SM)
149.0	8 9 6	20.9 <>	
146.5	2 2 1	20.5 <>	
146.5			
144.0	1 2 1	24.3 <>	FILL - Silty clay, trace to some sand, sand, trace gravel, occasional cinder pockets, mottled brown and gray to brown (CL)
141.5			
138.0	5 5 7	22.3 <>	
136.5			Very stiff SILTY CLAY, trace sand and gravel, 5-inch gravel layer at 12.9 ft, brown (CL)
131.5	8 11 20	15.4 7000*PP	
129.0			
126.5	4 6 7	15.0 3560	
			BOTT/FOOTING ABUTMENT (A/WEST) EL 123.0
121.5	2 4 5	16.6 2000*PP	
116.5	0 3 3	17.4 1200#TV	
111.5	0 5 5	16.4 1000#TV	Alternating layers of stiff to soft SILTY CLAY and SILTY SANDY CLAY, trace gravel, occasional silt fine sand seams, gray (CL)
106.5	3 3 6	13.6 2500*PP	
			MINIMUM PILE PENETRATION EL. 103.00 HP 12X53
101.5	2 2 2	12.5 800#TV	
96.5	6 2 3	19.8 800#TV	
91.5	2 2 4	20.8 1000#TV	
90.0			
86.5	4 3 4	16.0 <>	
81.5	7 4 4	13.9 1000#TV	LOOSE SILTY CLAYEY FINE SAND, trace gravel, gray, wet (SC/SM)
76.5	3 9 15		
71.5	1 3 5	19.1 1280	
71.5			

TEST BORING NO. B-03(CONTINUED)

Elevation	Blows	Qu (tsf)	Description
66.5	1 3 5	20.5 1000#TV	
61.5	0 2 3	31.2 600#TV	Medium to soft SILTY CLAY, trace sand and gravel, occasional silty fine sand partings and layers, gray (CL)
56.5	0 1 4	23.9 1000#TV	
51.5	1 4 4	23.1 800#TV	
46.5	0 3 6	20.2 1600#TV	
41.5	0 2 4	21.6 1200#TV	
36.5	0 3 3	20.4 1600#TV	
31.5	2 4 5	21.5 800#TV	
26.5	2 3 5	21.4 1000#TV	
21.5	4 6 8	21.8 800#TV	
16.5	2 4 6	25.7 1000#TV	
11.5	3 5 7	23.6 800#TV	
6.5	15 22 15	21.0 <>	
3.0			
1.5	73 100	9.6 9000+*PP	Hard SILTY SANDY CLAY, trace gravel, occasional clayey silt layers and sand layers, stiff silty clay layer at 160 ft., gray (CL)
-3.5	76 100	9.6 9000+*PP	
			EXTIMATED PILE TIP ELEVATION HP 12X53 NOMINAL RESISTANCE = 350K EL. -7.0
-8.5	24 50 50	25.8 5500*PP	
-13.5	60	11.1 9000+*PP	

NOTES:
GROUNDWATER ENCOUNTERED AT DEPTH 60 FT DURING DRILLING

GROUNDWATER WAS NOT REPORTED UPON COMPLETION OF DRILLING DUE TO WASH ROTARY DRILLING METHODS

BORING TERMINATED AT A DEPTH OF 164.0 FEET BELOW EXISTING GRADE (EL. MINUS 14.0 FEET DCD).

DRILL RIG: CME 75 (AUTOMATIC HAMMER)
DRILL METHOD: 2¼INCH HSA/WR
BACKFILLED WITH: GROUT & PATCH

DATE STARTED: 03-06-13
DATE COMPLETED: 03-11-13

ENGINEER ON RIG: S.SWAMINATHAN/C.WEIRAUCH

LEGEND:

APPROXIMATE SOIL BORING LOCATION

LOCATION PLAN

1ST 6 inch 13
2ND 6 inch 16
3RD 6 inch 14
% MC
UCS (PSF)

NUMBERS IN CIRCLES DENOTE NUMBER OF BLOWS REQUIRED TO DRIVE A 2 inch O.D. (1!*2 inch I.D.) SPLIT SPOON SAMPLER 3 SUCCESSIVE 6 inch INCREMENTS USING A 140 LB HAMMER FALLING 2.5 ft.

LABORATORY AND FIELD TEST RESULTS SHOWN INDICATE:

MC - MOISTURE CONTENT (PERCENT)
UCS - UNCONFINED COMPRESSIVE STRENGTH LABORATORY DETERMINED POUNDS/SQ.FT (PSF)
•PP UNCONFINED COMPRESSIVE STRENGTH USING POCKET PENETROMETER POUNDS/SQ.FT (PSF)
*TV UNCONFINED COMPRESSIVE STRENGTH USING TORVANE TEST POUNDS/SQ.FT (PSF)
< > DISTURBED SAMPLE

NR NO RECOVERY

37/0" WHERE THE SAMPLER IS DRIVEN DISTANCES OTHER THAN 18 inches, THE DISTANCE IS SHOWN IN THE CIRCLE WITH THE NUMBER OF BLOWS IN THE FORM OF A FRACTION. (DISTANCE IS IN INCHES).

CONSISTENCY WAS DETERMINED BY INSPECTION OF SAMPLES AND SUBSTANTIATED BY SOIL RESISTANCE TO DRILLING TOOLS (CASING OR AUGER). UNIFIED SOIL CLASSIFICAITON SYSTEM (USCS) GROUP SYMBOL DETERMINED PER ASTM VISUAL-MANUAL PROCEDURES.

THE SOIL BORING LOGS REPRESENT POINT INFORMATION. PRESENTATION OF THIS INFORMATION IN NO WAY IMPLIES THAT THE SUBSURFACE CONDITIONS ARE THE SAME AT LOCATIONS OTHER THAN THE EXACT LOCATION OF THE BORING.

GROUNDWATER LEVELS REPRESENT THE CONDITIONS AT THE TIME THE MEASUREMENTS WERE OBTAINED AND SHOULD BE EXPECTED TO FLUCTUATE THROUGHOUT THE YEAR. GROUNDWATER LEVELS MAY ALSO BE INFLUENCED BY RESIDUAL BORING WATER.

Somat Engineering, INCORPORATED

REV.#	DATE	DESCRIPTION	BY

NOT VALID FOR CONSTRUCTION UNLESS SIGNED AND DATED.

WADE TRIM
500 Griswold, Suite 2500
Detroit, MI 48226
313.961.3650
Fax 313.961.9998
www.wadetrim.com
Building relationships on a foundation of excellence

CITY OF DETROIT
DEPARTMENT OF PUBLIC WORKS
CITY ENGINEERING DIVISION
DIVISION ST. OVER DEQUINDRE CUT S.N. 124467
LOG OF BORING

ISSUED FOR: DATE: BY:

JOB NO. DTE 2025-10T

SHEET 11 (451)

DIVISION STREET BRIDGE

© Wade Trim Group, Inc.

PROJECT MANAGER: -
FIELD BOOK INFORMATION: -
c:\pw_work\d0369109\CSB-PLTS-SoilBoringLog3.dgn
PLOTTED 5/21/2013 10:02:21 AM BY mszarzycka

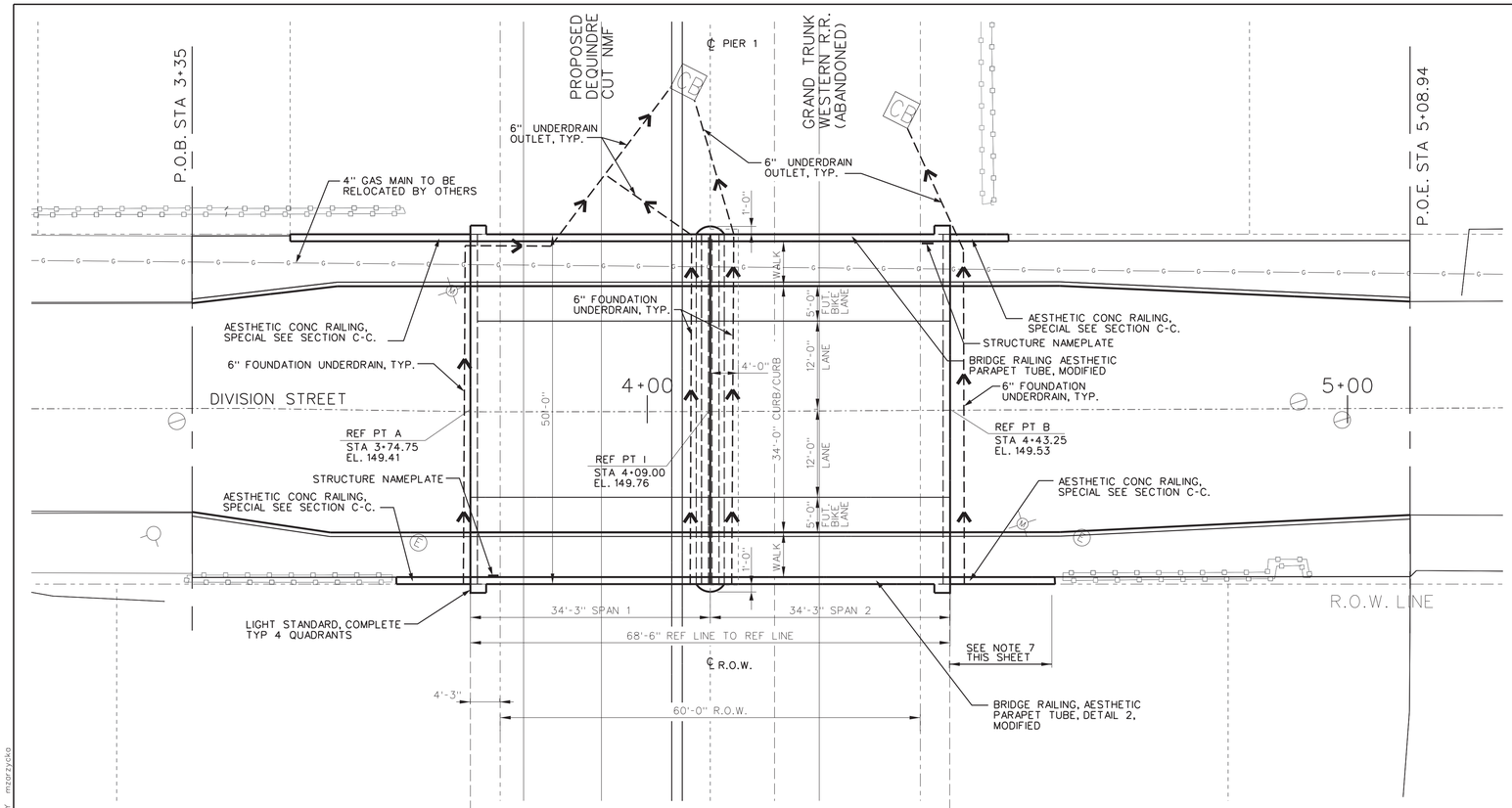

PLAN

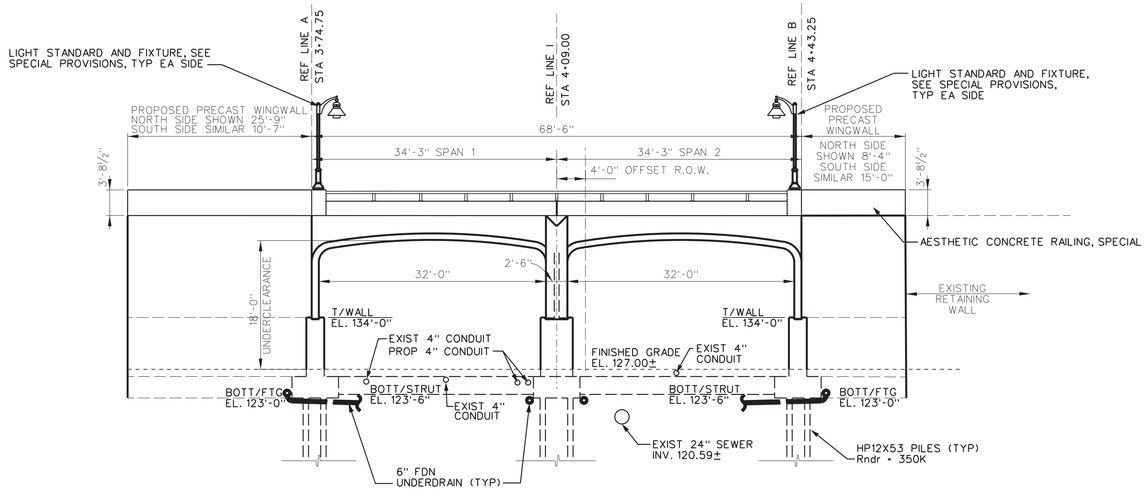

SOUTH ELEVATION

NOTE:
PEDESTRIAN FENCE, SPECIAL NOT SHOWN FOR CLARITY

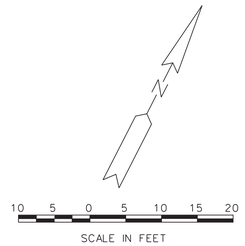

NOTES:

THE DESIGN OF THIS STRUCTURE IS BASED ON 1.2 TIMES THE CURRENT AASHTO LRFD BRIDGE DESIGN SPECIFICATION HL-93 LOADING WITH THE EXCEPTION THAT THE DESIGN TANDEM PORTION OF THE HL-93 LOAD DEFINITION SHALL BE REPLACED BY A SINGLE 60 KIP AXLE LOAD BEFORE APPLICATION OF THIS 1.2 FACTOR. THE RESULTING LOAD IS DESIGNATED HL-93 MOD. LIVE LOAD PLUS DYNAMIC LOAD ALLOWANCE DEFLECTION DOES NOT EXCEED 1/1000 OF SPAN LENGTH.

CONCRETE SURFACE COATING SHALL BE APPLIED TO EXPOSED FACES OF RAILING, ARCH FASCIAS AND PIER FASCIA. EXPOSED RETAINING WALLS AND BRIDGE RAILING SHALL ALSO BE COATED. SEE DETAIL SHEETS FOR LIMITS OF COVERAGE.

EXISTING BRIDGE NAMEPLATES ARE TO BE SALVAGED ON SITE AND SHALL BE GIVEN TO THE ENGINEER AND BECOME THE PROPERTY OF THE CITY OF DETROIT.

SEE REMOVAL SHEETS FOR LIMIT OF EXISTING STRUCTURE REMOVALS.

REMOVAL OF BRIDGE SUPERSTRUCTURE, CONCRETE PIERS AND CONCRETE ABUTMENTS SHALL BE PAID FOR AS "STRUCTURE, REM PORTIONS, MODIFIED"

REMOVAL OF PORTIONS OF CONCRETE RETAINING WALL SHALL BE PAID FOR AS "STRUCTURE, REM PORTIONS, MODIFIED".

1929 PLANS INDICATE EXISTING BLDG FDN ADJACENT TO BRIDGE. IT IS UNKNOWN IF BLDG FOUNDATIONS HAVE PREVIOUSLY BEEN REMOVED. IF FOUNDATIONS ARE ENCOUNTERED, CONTRACTOR SHALL REMOVE WITH CAUTION-WITHIN LIMITS OF GRADING EASEMENT. BACKFILL WITH STRUCTURE BACKFILL AND COMPACT, PER STD. SPECIFICATIONS. REMOVAL SHALL BE INCLUDED IN PAY ITEM "STRUCTURES, REM PORTIONS, MODIFIED"

EXISTING PLANS DO NOT INDICATE TIMBER PILES. IF EXISTING TIMBER PILES ARE LOCATED WITHIN THE PROPOSED FOOTINGS, THE CONTRACTOR SHALL DO THE FOLLOWING WORK:

- IF THE EXISTING PILE IS IN CONFLICT WITH PROPOSED PILING, IT SHALL BE REMOVED.

- IF EXISTING PILE IS NOT IN CONFLICT WITH PROPOSED, THE EXISTING PILE SHALL BE CUT DOWN 6'-0" BELOW BOTTOM OF PROPOSED FOOTING.

REMOVAL OF EXIST PILES SHALL BE PAID FOR AS "PILE, TIMBER, REM". CUTTING DOWN OF PILES SHALL BE INCLUDED IN THE PAY ITEM "STRUCTURES, REM PORTIONS, MODIFIED".

SEE SPECIAL PROVISION ON FIBER OPTIC COORDINATION & PROTECTION. SEE SHEET 19 FOR SLEEVE DETAIL.

CONDUITS IN EXISTING BRIDGE MAY BE ASBESTOS. CONTRACTOR SHALL CONFIRM.

MISCELLANEOUS QUANTITIES		
5000	DLR	ASBESTOS MATERIALS, REMOVAL AND DISPOSAL
1	LS	AUDIO-VISUAL FILMING (SN 12467)
1	LS	PROJECT CLEANUP (SN 12467)
1	LS	STRUCTURES, REM PORTIONS, MODIFIED (SN 12467)
1186	CYD	BACKFILL, STRUCTURE, CIP
1144	CYD	EXCAVATION, FDN
3	EA	EROSION CONTROL, INLET PROTECTION, FABRIC DROP
550	FT	EROSION CONTROL, SILT FENCE
13	SYD	SLOPE RESTORATION, TYPE A
210	FT	UNDERDRAIN, FDN, 6 INCH
85	FT	UNDERDRAIN OUTLET, 6 INCH
3	EA	DR STRUCTURE TAP, 6 INCH
20	EA	PILE, TIMBER, REM
160	CYD	NON-HAZARDOUS CONTAMINATED MATERIAL HANDLING AND DISPOSAL, LM
1	LS	RELOCATION AND SITE CLEANUP (SN 12467)
16	EA	PROTECTION, FIBER OPTIC LINE, BRIDGE
1	LS	COORDINATION, FIBER OPTIC LINE (SN 12467)

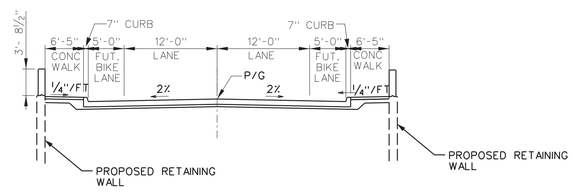

APPROACH SECTION

REV#	DATE	DESCRIPTION	BY

NOT VALID FOR CONSTRUCTION UNLESS SIGNED AND DATED.

WADETRIM
500 Griswold, Suite 2500
Detroit, MI 48226
313.961.3650
FAX 313.961.0998
www.wadetrim.com

Building relationships on a foundation of excellence

CITY OF DETROIT
DEPARTMENT OF PUBLIC WORKS
CITY ENGINEERING DIVISION
DIVISION ST. OVER DEQUINDRE CUT S.N. 12467
GENERAL PLAN OF STRUCTURE

ISSUED FOR: DATE: BY:

JOB NO. DTE 2025-10T

SHEET 12 (452)

DIVISION STREET BRIDGE

© Wade Trim Group, Inc.

PLOTTED 5/21/2013 10:04:32 AM BY mzarzycki

PROJECT MANAGER: - FIELD BOOK INFORMATION: -
c:\pw_work\d0369109\CSP-PLTS-PlanOfStructure.dgn

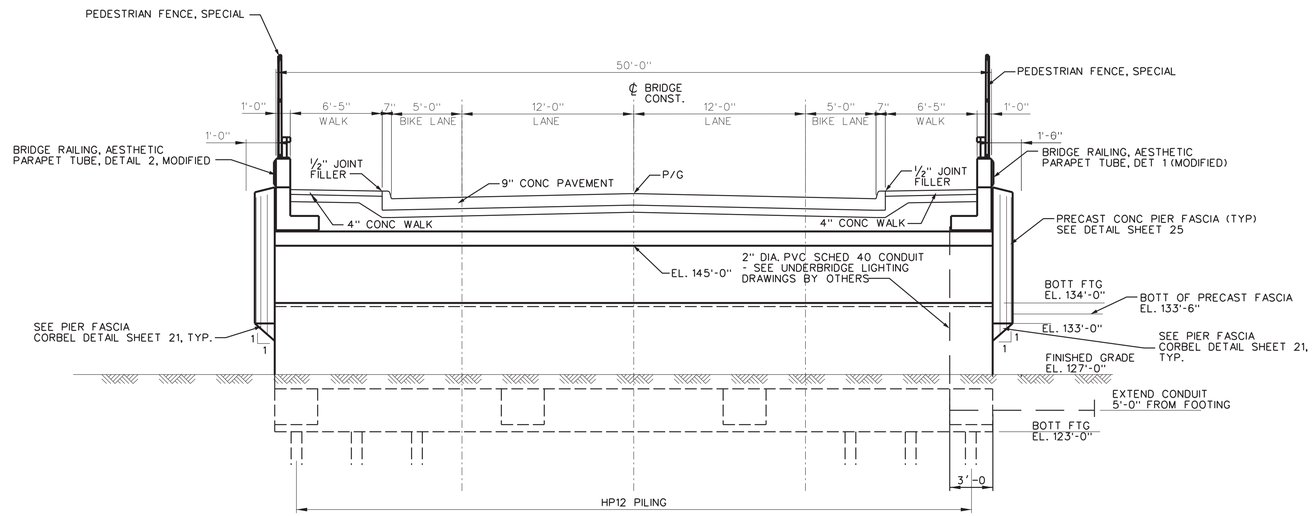

BRIDGE SECTION

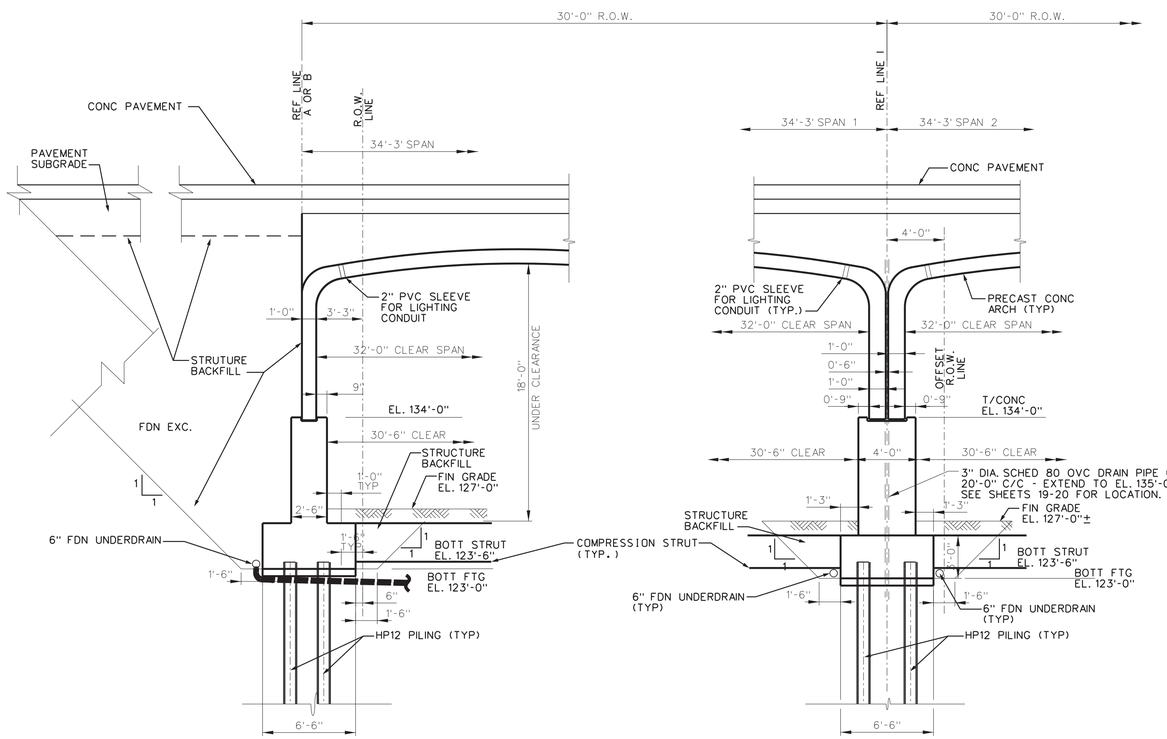

TYPICAL ABUTMENT SECTION

TYPICAL PIER SECTION

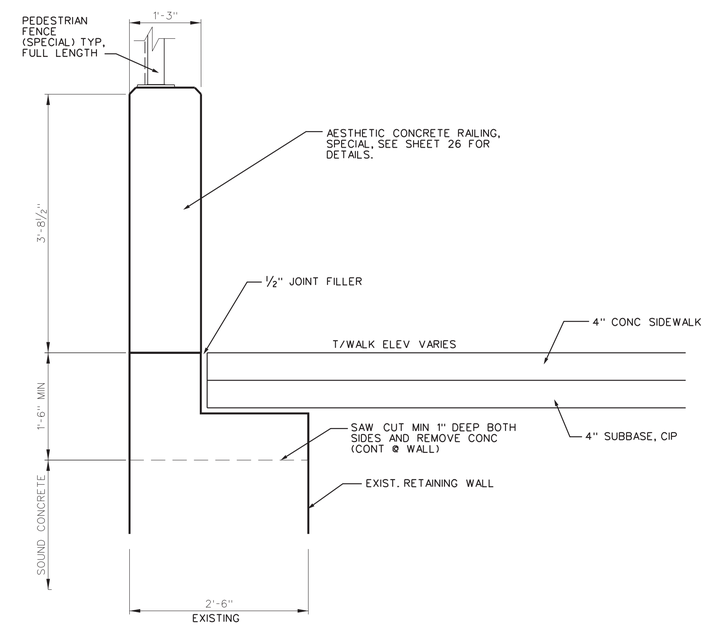

SECTION C-C

NO SCALE

REV.#	DATE	DESCRIPTION	BY

NOT VALID FOR CONSTRUCTION UNLESS SIGNED AND DATED:

WADETRIM
500 Griswold, Suite 2500
Detroit, MI 48226
313.961.3650
FIRM LICENSE NO. 1000
www.wadetrim.com

Building relationships on a foundation of excellence

CITY OF DETROIT
DEPARTMENT OF PUBLIC WORKS
CITY ENGINEERING DIVISION
DIVISION ST. OVER DEQUINDRE CUT S.N. 12467
PLAN OF STRUCTURE DETAILS

ISSUED FOR: DATE: BY:

JOB NO. DTE 2025-10T

SHEET 13 (453)

DIVISION STREET BRIDGE

© Wade Trim Group, Inc.

PROJECT MANAGER: -
FIELD BOOK INFORMATION: -
e:\tw_work\d0359109\CDT-PLTS-StructureDetails.dgn
PLOTTED 5/21/2013 10:10:46 AM BY mzarzycka

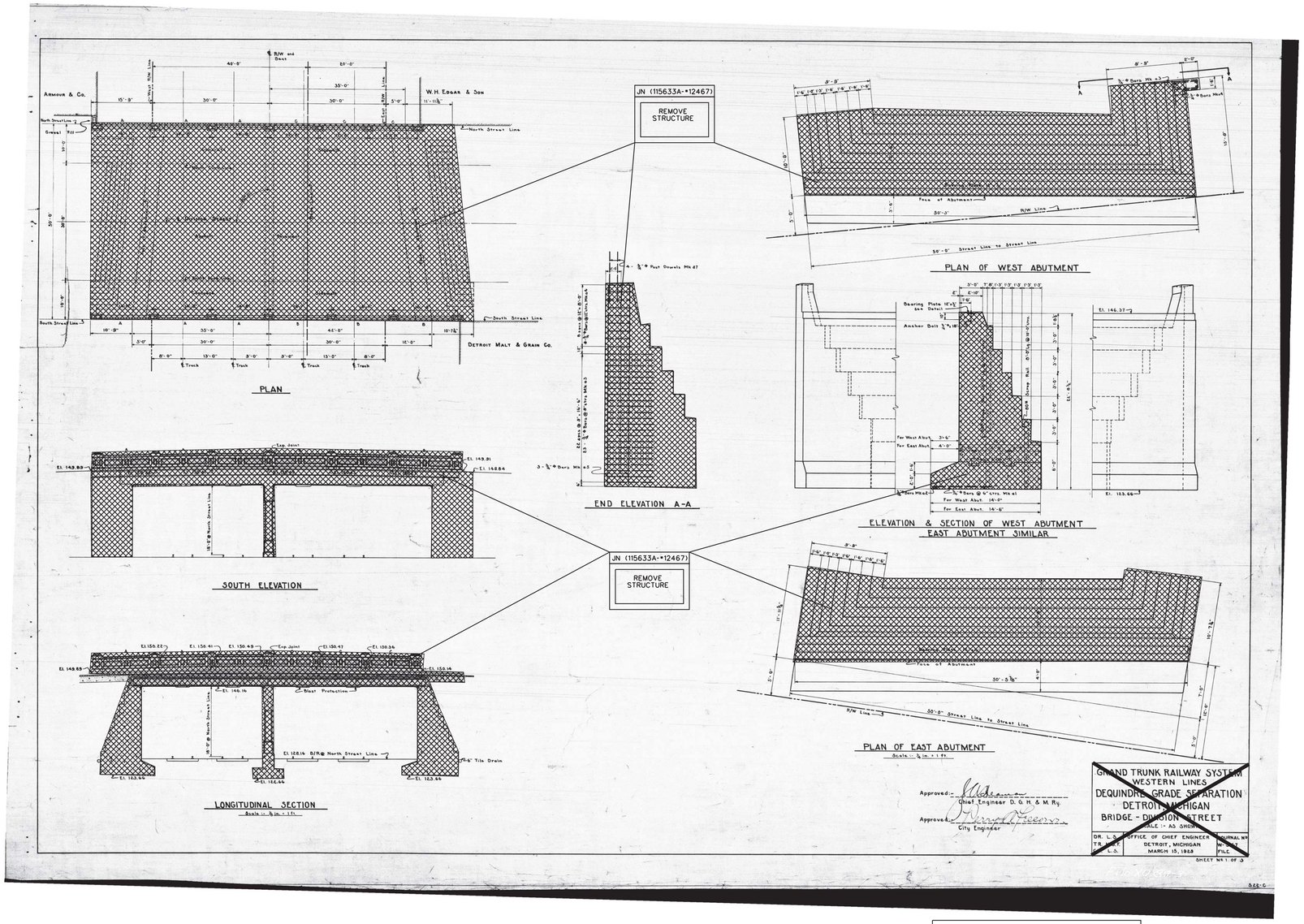

JOB NO. (115633A-*12467)

IT IS UNCERTAIN IF TIMBER PILING EXISTS AT EXISTING BRIDGE. CONTRACTOR SHALL MAKE HIS OWN DETERMINATION IF PILES ARE PRESENT. IF PILES ARE ENCOUNTERED, THEY SHALL BE REMOVED IF THEY INTERFERE WITH PROPOSED PILES. IF EXISTING PILES DO NOT INTERFERE, THEY MAY REMAIN IN PLACE BUT SHALL BE CUT DOWN TO 6'-0" BELOW PROPOSED BOTTOM OF FOOTING. EXISTING PILE REMOVAL SHALL BE PAID FOR AS "PILE, TIMBER, REM".

REMOVAL NOTE

JOB NO. (115633A-*12467)

DURING BRIDGE REMOVAL OPERATIONS, CARE SHALL BE TAKEN BY THE CONTRACTOR TO AVOID DAMAGING THE ADJACENT BUILDINGS THAT ARE TO REMAIN. DAMAGE TO THE BUILDINGS CAUSED BY CONTRACTORS REMOVAL OPERATIONS SHAL BE REPAIRED BY THE CONTRACTOR, AT THE CONTRACTORS EXPENSE.

REMOVAL SHEET

JOB NO. (115633A-*12467)

THE ONLY ITEMS OF WORK TO BE DONE FROM THIS SHEET ARE IDENTIFIED BY USING THE LEGEND BELOW, LABELED WITH THIS PROJECTS JOB NUMBER

PROPOSED WORK

DENOTES REMOVAL PORTIONS

REV.#	DATE	DESCRIPTION	BY

NOT VALID FOR CONSTRUCTION UNLESS SIGNED AND DATED.

WADE TRIM
500 Griswold, Suite 2500
Detroit, MI 48226
313.961.3650
FAX 313.961.8666
www.wadetrim.com

Building relationships on a foundation of excellence

CITY OF DETROIT
DEPARTMENT OF PUBLIC WORKS
CITY ENGINEERING DIVISION
DIVISION ST. OVER DEQUINDRE CUT S.N. 12467
EXISTING BRIDGE PLANS
REMOVAL SHEET

ISSUED FOR: DATE: BY:

JOB NO. DTE 2025-10T

SHEET 14 (454)

DIVISION STREET BRIDGE

© Wade Trim Group, Inc.

PROJECT MANAGER: - FIELD BOOK INFORMATION: -
c:\pw_work\d0369109\SDP-PLTS-REMOVAL.dgn
PLOTTED 5/21/2013 10:13:14 AM BY mzarzycki

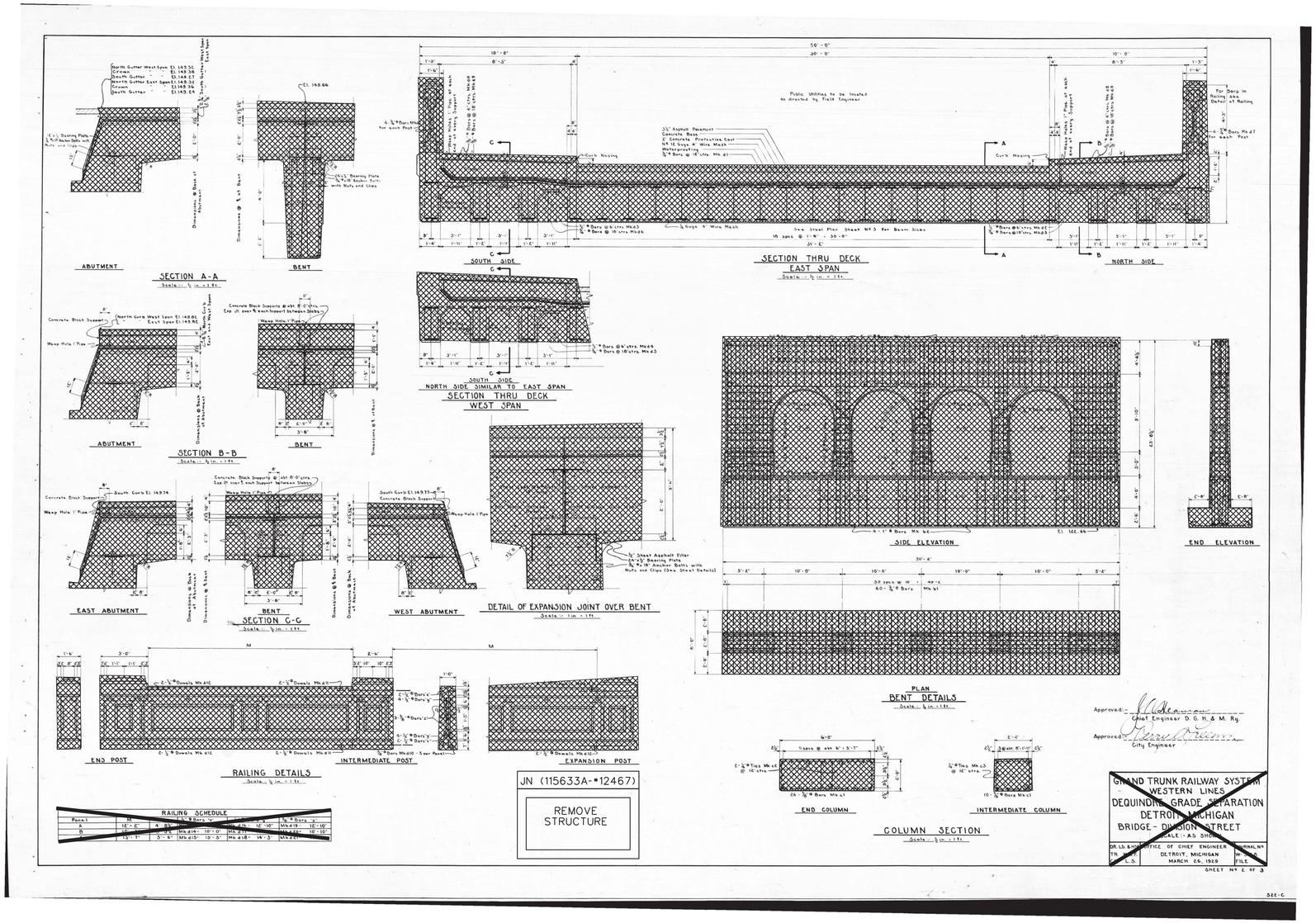

RAILING SCHEDULE							
Panel	M	¾" ⌀ Bars "X"		¾" ⌀ Bars "Y"		¾" ⌀ Bars "Z"	
A	12'-0"	4 - 0'-0"	Mk d14	10'-0"	Mk d18	12'-10"	Mk d19
B	12'-0"	4 - 0'-0"	Mk d14	10'-0"	Mk d18	12'-10"	Mk d19
C	15'-3"	5'-6"	Mk d15	13'-5"	Mk d18	14'-3"	Mk d18
D	12'-0"	4 - 0'-0"	Mk d14	10'-0"	Mk d18	12'-10"	Mk d19
E	12'-0"	4 - 0'-0"	Mk d14	10'-0"	Mk d18	12'-10"	Mk d19

JN (115633A-#12467)

REMOVE STRUCTURE

JOB NO. (115633A-#12467)

IT IS UNCERTAIN IF TIMBER PILING EXISTS AT EXISTING BRIDGE. CONTRACTOR SHALL MAKE HIS OWN DETERMINATION IF PILES ARE PRESENT. IF PILES ARE ENCOUNTERED, THEY SHALL BE REMOVED IF THEY INTERFERE WITH PROPOSED PILES. IF EXISTING PILES DO NOT INTERFERE, THEY MAY REMAIN IN PLACE BUT SHALL BE CUT DOWN TO 6'-0" BELOW PROPOSED BOTTOM OF FOOTING. EXISTING PILE REMOVAL SHALL BE PAID FOR AS "PILE, TIMBER, REM".

REMOVAL NOTE

JOB NO. (115633A-#12467)

DURING BRIDGE REMOVAL OPERATIONS, CARE SHALL BE TAKEN BY THE CONTRACTOR TO AVOID DAMAGING THE ADJACENT BUILDINGS THAT ARE TO REMAIN. DAMAGE TO THE BUILDINGS CAUSED BY CONTRACTORS REMOVAL OPERATIONS SHAL BE REPAIRED BY THE CONTRACTOR, AT THE CONTRACTORS EXPENSE.

REMOVAL SHEET

JOB NO. (115633A-#12467)

THE ONLY ITEMS OF WORK TO BE DONE FROM THIS SHEET ARE IDENTIFIED BY USING THE LEGEND BELOW, LABELED WITH THIS PROJECTS JOB NUMBER

PROPOSED WORK

DENOTES REMOVAL PORTIONS

REV#	DATE	DESCRIPTION	BY

NOT VALID FOR CONSTRUCTION UNLESS SIGNED AND DATED.

WADE TRIM

500 Griswold, Suite 2900
Detroit, MI 48226
313.961.3650
313.961.8966
www.wadetrim.com

Building relationships on a foundation of excellence

CITY OF DETROIT
DEPARTMENT OF PUBLIC WORKS
CITY ENGINEERING DIVISION

DIVISION ST. OVER DEQUINDRE CUT S.N. 12467
EXISTING BRIDGE PLANS
REMOVAL SHEET

ISSUED FOR: DATE: BY:

JOB NO. DTE 2025-10T

SHEET 15 (455)

© Wade Trim Group, Inc.

DIVISION STREET BRIDGE

PROJECT MANAGER: -
FIELD BOOK INFORMATION: -
z:\tw_work\d0359109\SDP-PLTS-REMOVAL2.dgn
PLOTTED 5/21/2013 10:16:33 AM BY mzarzycki

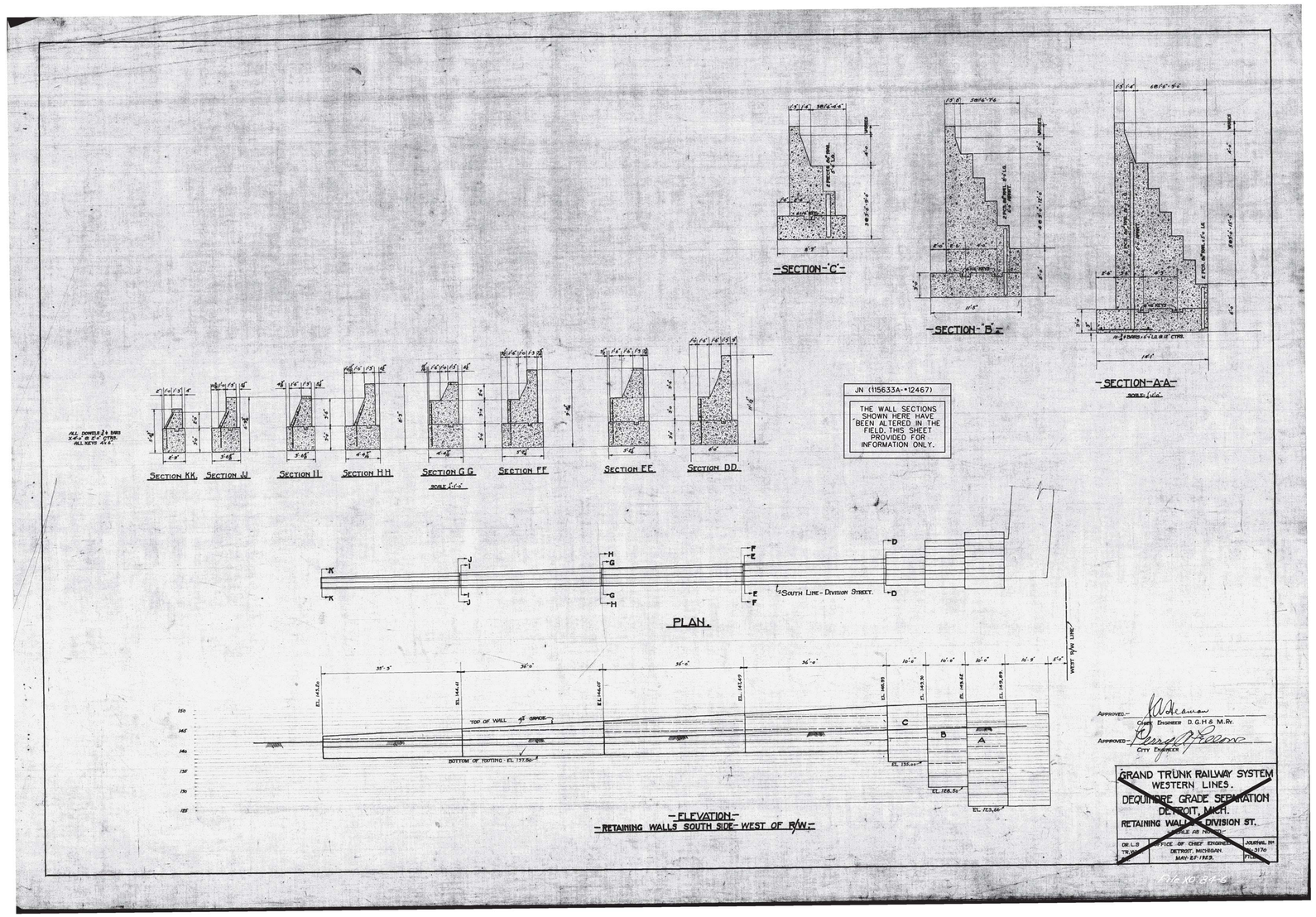

EXISTING

JOB NO. (115633A-#12467)

FOR INFORMATION ONLY

DO NOT WORK FROM THIS SHEET. INFORMATION SHOWN HERE IS FOR REFERENCE ONLY. NO PAY ITEMS SHOWN.

REV.#	DATE	DESCRIPTION	BY

NOT VALID FOR CONSTRUCTION UNLESS SIGNED AND DATED:

WADE TRIM

500 Griswold, Suite 2500
Detroit, MI 48226
313.961.3650
FAX 313.961.0966
www.wadetrim.com

Building relationships on a foundation of excellence

CITY OF DETROIT
DEPARTMENT OF PUBLIC WORKS
CITY ENGINEERING DIVISION

DIVISION ST. OVER DEQUINDRE CUT S.N. 12467
EXISTING BRIDGE PLANS
REMOVAL SHEET

ISSUED FOR: DATE: BY:

JOB NO. DTE 2025-10T

SHEET 16 (456)

DIVISION STREET BRIDGE

© Wade Trim Group, Inc.

PROJECT MANAGER: -
FIELD BOOK INFORMATION: -
z:\pw_work\d0359109\SDP-PLTS-REMOVAL3.dgn
PLOTTED 5/21/2013 10:18:56 AM BY mzarzycka

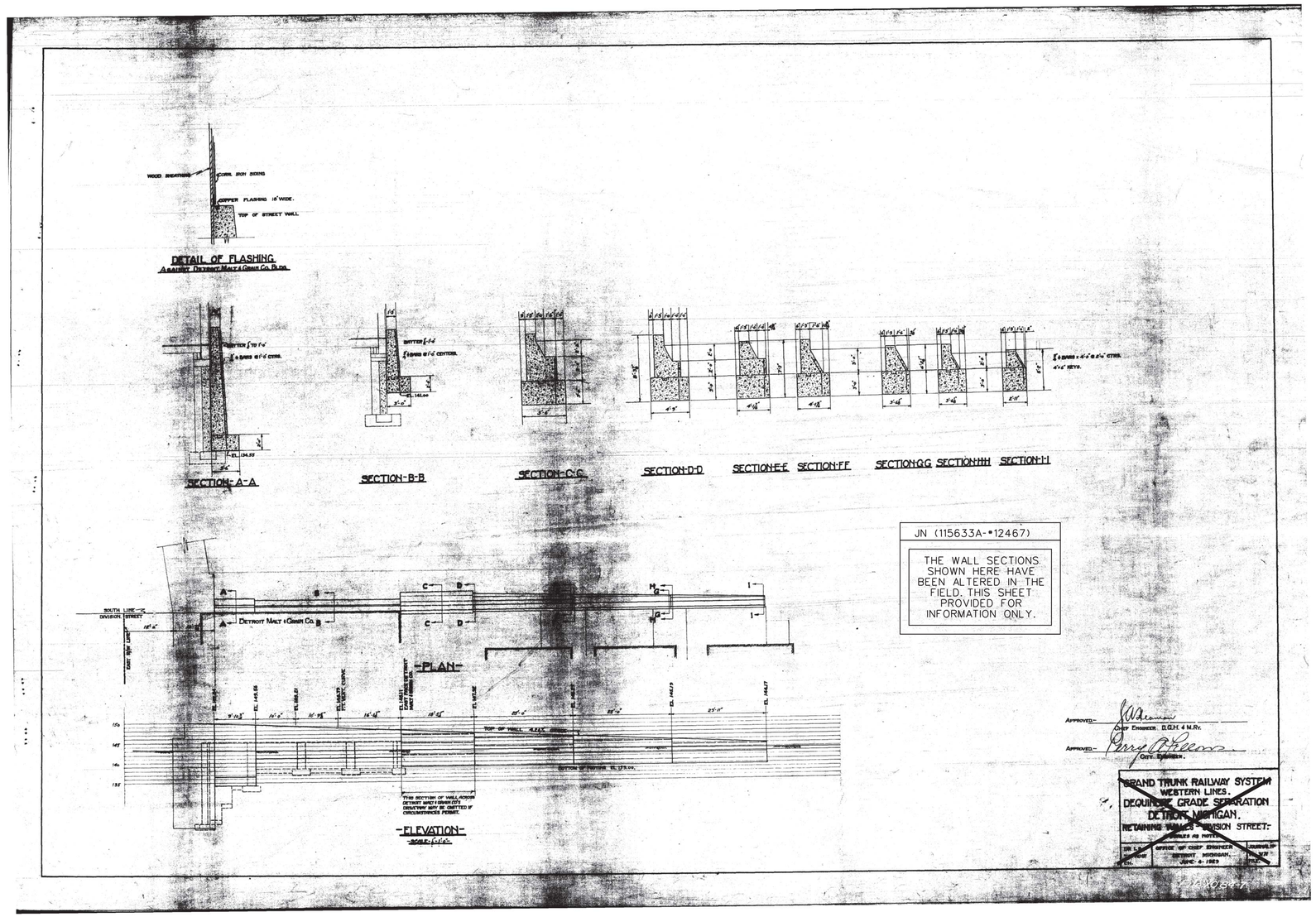

JN (115633A-#12467)

EXISTING

JOB NO. (115633A-#12467)

FOR INFORMATION ONLY

DO NOT WORK FROM THIS SHEET. INFORMATION SHOWN HERE IS FOR REFERENCE ONLY. NO PAY ITEMS SHOWN.

REV.#	DATE	DESCRIPTION	BY

NOT VALID FOR CONSTRUCTION UNLESS SIGNED AND DATED:

WADE TRIM

500 Griswold, Suite 2500
Detroit, MI 48226
313.961.3650
FAX 313.961.3666
www.wadetrim.com

Building relationships on a foundation of excellence

CITY OF DETROIT
DEPARTMENT OF PUBLIC WORKS
CITY ENGINEERING DIVISION

DIVISION ST. OVER DEQUINDRE CUT S.N. 12467
EXISTING BRIDGE PLANS
REMOVAL SHEET

ISSUED FOR: DATE: BY:

JOB NO. DTE 2025-10T

SHEET 17 (457)

DIVISION STREET BRIDGE

© Wade Trim Group, Inc.

PROJECT MANAGER: -
FIELD BOOK INFORMATION: -
c:\pw_work\d3691091\SDP-PLTS-REMOVAL4.dgn
PLOTTED 5/21/2013 10:23:03 AM BY mzarzycki

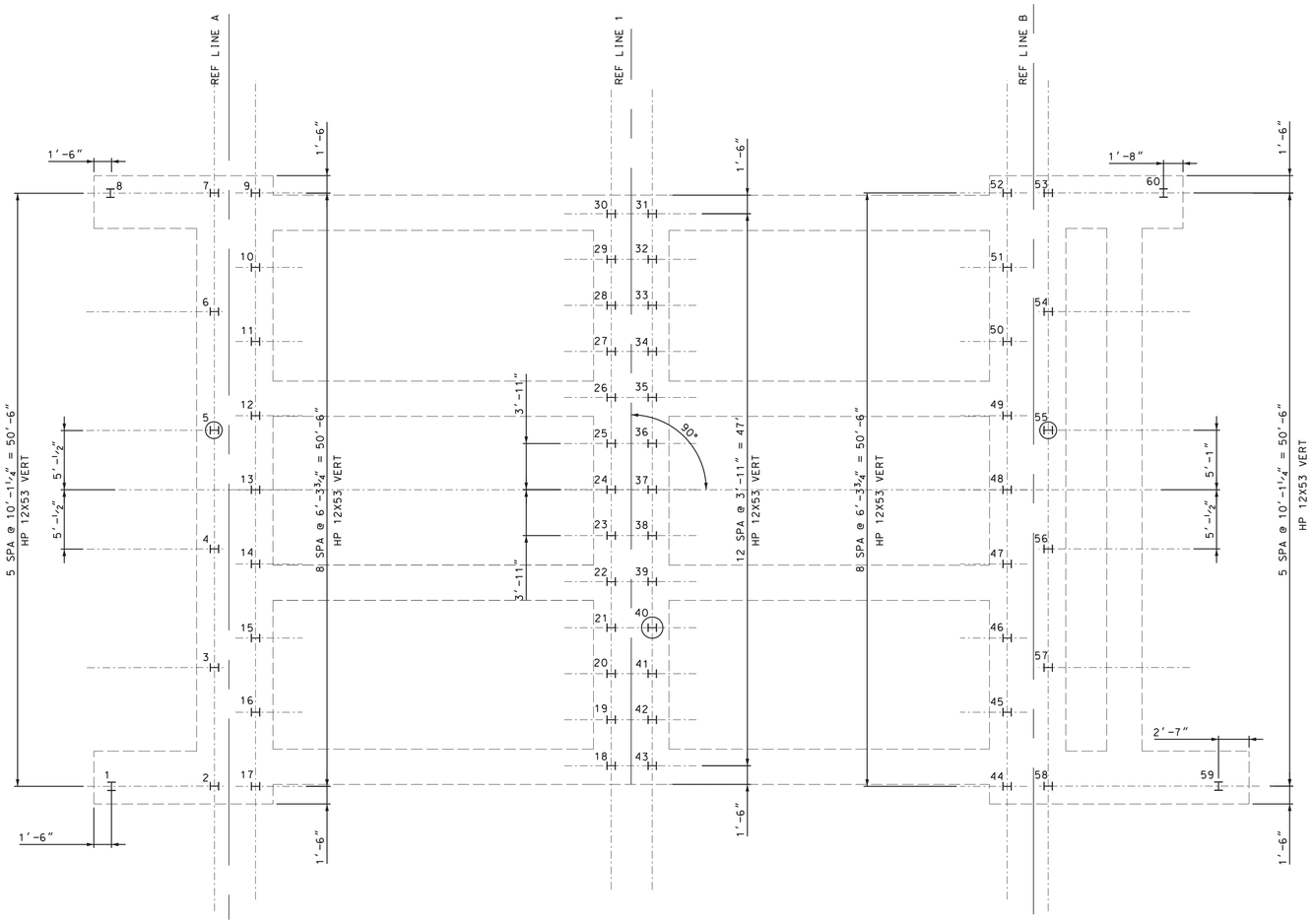

PILE PLAN

NOTES:

DRIVE ALL PILES TO A NOMINAL PILE DRIVING RESISTANCE NOT LESS THAN OF 350 KIPS. NEGLECTING DOWNDRAGE (270 KIPS INCLUDING DOWNDRAG). DETERMINE NOMINAL PILE DRIVING RESISTANCE (Rndr) USING DYNAMIC TEST WITH SIGNAL MATCHING (P.D.A. TESTING).

THE ESTIMATED PILE LENGTH IS BASED ON THE STATIC ANALYSIS.

STEEL PILES SHALL BE HP 12X53.

PILES ARE TO BE DRIVEN TO SUCH ACCURACY THAT THE ENDS OF THE PILES TO BE EMBEDDED IN THE CONCRETE ARE WITHIN 3" OF THE LOCATION SHOWN ON THE PLANS.

USE STEEL FOR H-PILES THAT HAVE A YIELD STRENGTH NOT LESS THAN 50,000 PSI.

THE ESTIMATED FACTORED DOWNDRAG AFTER PILE DRIVING IS 80 KIPS. THE REDUCED FACTORED RESISTANCE (Rstat) INCLUDING POTENTIAL FOR DOWNDRAG WITH PDA VERIFICATION IS 175 KIPS

ALL PILES SHALL BE PREBORED TO EL. 106'-0" OR MINIMUM TEN FEET BELOW WATERMAIN INVERT. WHICHEVER IS GREATER. FILL PREBORE WITH FLOWABLE FILL AFTER PILE INSTALLATION.

ALL PILES SHALL BE DRIVEN WITH PROTECTIVE CAST STEEL PILE POINTS. SEE SPECIAL PROVISION FOR DETAILS.

ESTIMATED PILE TIP ELEVATIONS:
- -ABUTMENT A = EL. 2.00 FT
- -PIER 1 = EL. -3.00 FT
- -ABUTMENT B = EL. 2.00 FT

MISCELLANEOUS QUANTITIES

1020	FT	PREBORE, FDN PILING
1	LS	PILE DRIVING EQUIPMENT, FURN (SN 12467)
7813	FT	PILE, STEEL FURN AND DRIVEN, 12 INCH
3	EA	TEST PILE, STEEL, 12 INCH
60	EA	PILE POINT, STEEL
1	EA	TEST PILE, FURN DYNAMIC ANALYSIS EQUIPMENT
3	EA	TEST PILE, DYNAMIC ANALYSIS
1	LS	MONITORING VIBRATIONS (SN 12467)
67	CYD	FLOWABLE FILL
196	EA	PILE, STEEL, SPLICE

STEEL H-PILES: HP 12X53

LOCATION	PILE TYPE	NUMBER OF PILES	ESTIMATED LENGTH FURNISHED & DRIVEN		PILE POINTS (EACH)	SPLICES (EACH)	CUT-OFF ELEV.
			EACH LFT	TOTAL LFT			
ABUT A	TEST	1	139	139	1		123'-6"
	VERTICAL	16	129	2064	16		123'-6"
PIER 1	TEST	1	140	140	1		123'-6"
	VERTICAL	25	130	3250	25		123'-6"
ABUT B	TEST	1	140	140	1		123'-6"
	VERTICAL	16	130	2080	16		123'-6"
TOTAL				7813	60	196	

⊢ --DENOTES VERTICAL PILES.

(⊢) --DENOTES VERTICAL TEST PILES.

REV#	DATE	DESCRIPTION	BY

NOT VALID FOR CONSTRUCTION UNLESS SIGNED AND DATED.

WADE TRIM
500 Griswold, Suite 2500
Detroit, MI 48226
313.961.3650
FAX 313.961.8998
www.wadetrim.com

Building relationships on a foundation of excellence

CITY OF DETROIT
DEPARTMENT OF PUBLIC WORKS
CITY ENGINEERING DIVISION
DIVISION ST. OVER DEQUINDRE CUT S.N. 12467
PILE PLAN

ISSUED FOR: DATE: BY:

JOB NO. DTE 2025-10T

SHEET 18 (458)

DIVISION STREET BRIDGE

© Wade Trim Group, Inc.

PROJECT MANAGER: - FIELD BOOK INFORMATION: -
c:\pw_work\d0369103\CFP-PLTS-PilingPlan.dgn
PLOTTED 5/21/2013 10:27:12 AM BY mszoryzko

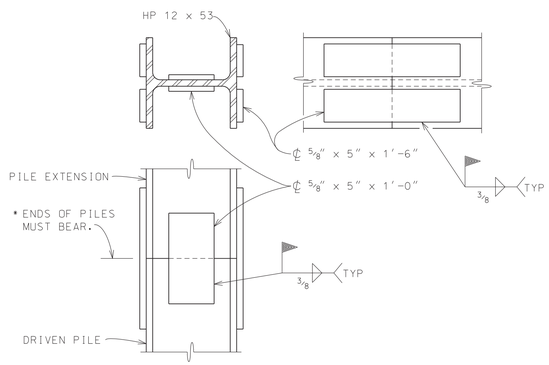

SPLICE DETAILS

* SET PILE EXTENSION IN PLACE WITH SPLICE PLATES ATTACHED. TAP SEVERAL TIMES WITH THE HAMMER TO IMPROVE BEARING CONTACT. THEN COMPLETE WELDING OF PLATES TO THE LOWER SECTION.

WELDED PILE SPLICE - SPLICE PLATES

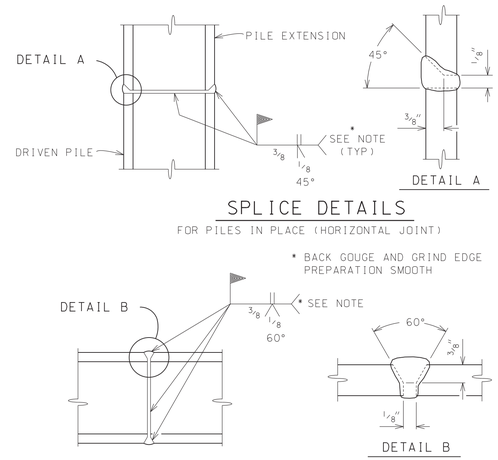

SPLICE DETAILS

FOR PILES IN PLACE (HORIZONTAL JOINT)

SPLICE DETAILS

FOR PILES IN HORIZONTAL POSITION

WELDED PILE SPLICE - BUTT JOINT

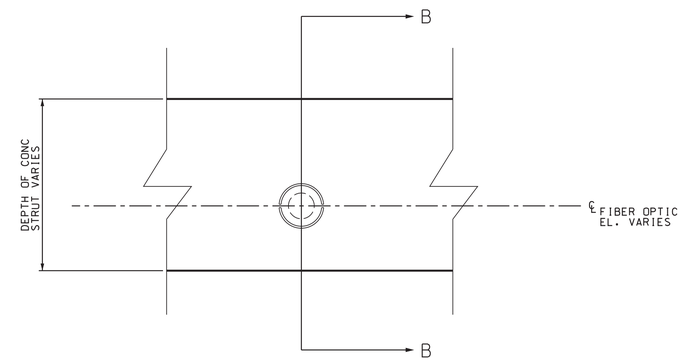

SECTION A-A

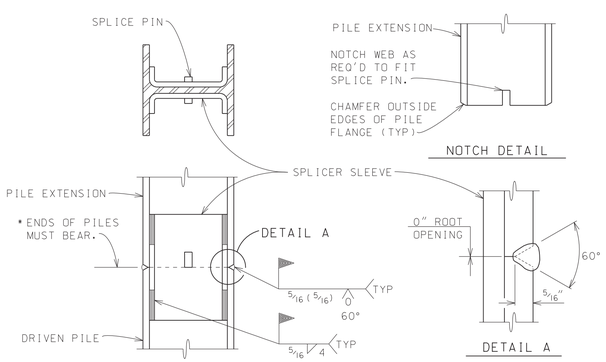

ALTERNATE SPLICE DETAILS

* SET PILE EXTENSION IN PLACE WITH SPLICE PLATES ATTACHED. TAP SEVERAL TIMES WITH THE HAMMER TO IMPROVE BEARING CONTACT. THEN COMPLETE WELDING OF PLATES TO THE LOWER SECTION.

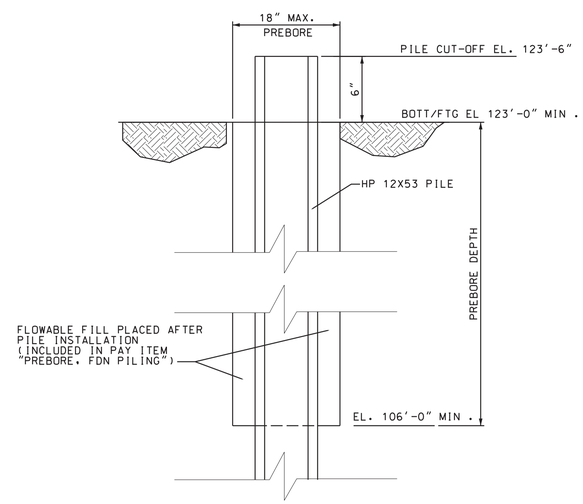

PILE PREBORE DETAIL

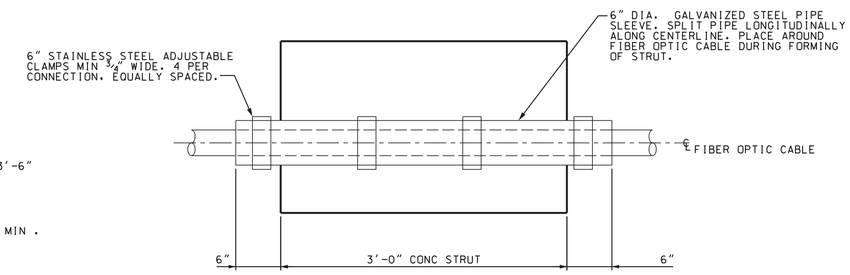

SECTION B-B

FIBER OPTIC CONDUIT DETAIL

CONTRACTOR NOTE:

SEE SPECIAL PROVISION ON FIBER OPTIC COORDINATION AND PROTECTION.

REV.*	DATE	DESCRIPTION	BY

NOT VALID FOR CONSTRUCTION UNLESS SIGNED AND DATED

WADETRIM
500 Griswold, Suite 2500
Detroit, MI 48226
313.961.3650
FAX 313.961.0866
www.wadetrim.com

Building relationships on a foundation of excellence

CITY OF DETROIT
DEPARTMENT OF PUBLIC WORKS
CITY ENGINEERING DIVISION
DIVISION ST. OVER DEQUINDRE CUT S.N. 124467
PILE DETAILS

ISSUED FOR: DATE: BY:

DIVISION STREET BRIDGE

JOB NO. DTE 2025-10T

SHEET 19 (459)

© Wade Trim Group, Inc.

PROJECT MANAGER: - FIELD BOOK INFORMATION: -
c:\pw_work\d0369109\CFP-PLTS Pile Details.dgn
PLOTTED 5/21/2013 10:28:30 AM BY mzorzycka

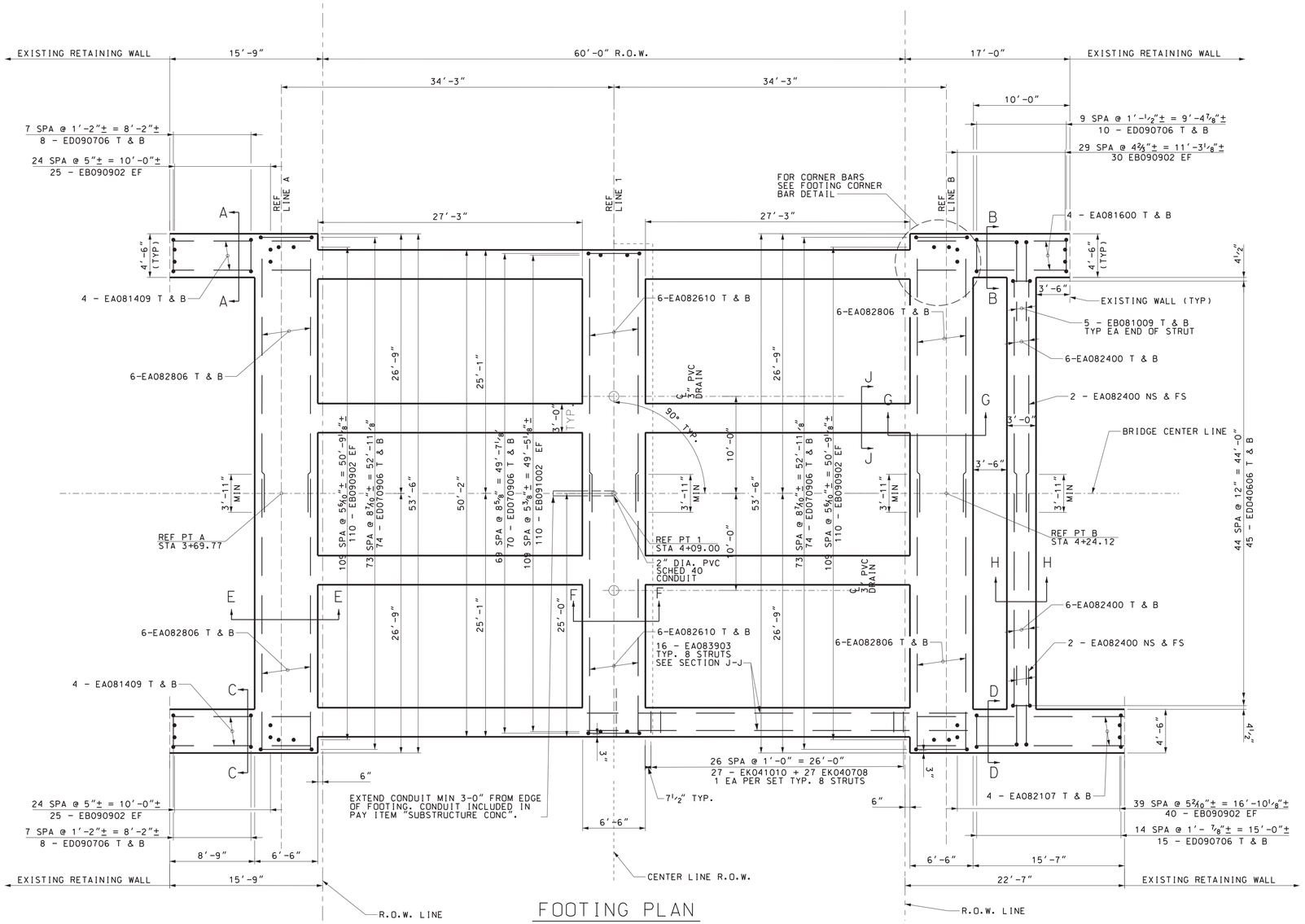

FOOTING PLAN

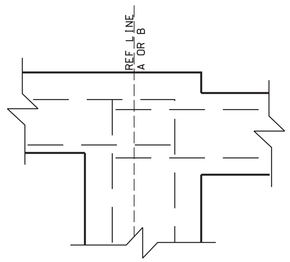

FOOTING PLAN @ CORNER

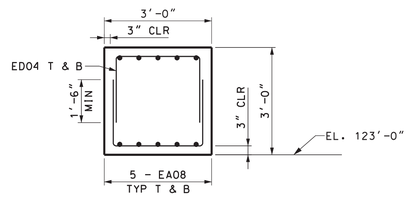

SECTION H-H

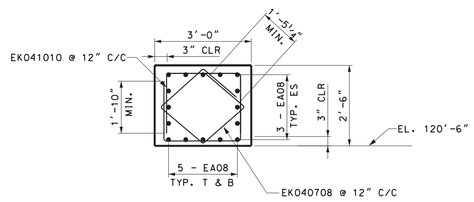

SECTION J-J

FOOTING CONC QUANTITIES		
SUBSTRUCTURE CONC		
LOCATION	QUANTITY	UNIT
ABUT A	80	CYD
PIER 1	37	CYD
ABUT B	100	CYD

NOTES:

CONSTRUCTION JOINTS IN FOOTINGS ARE OPTIONAL.

THE MATERIAL PROPERTIES OF CONCRETE. GRADE S2. SUBFOOTING SHALL BE THOSE OF CONCRETE GRADE S2.

OUTLINE OF WALLS NOT SHOWN FOR CLARITY.

CONCRETE QUANTITIES FOR ABUT A AND ABUT B INCLUDE CONCRETE QUANTITIES FOR TENSION & COMPRESSION STRUTS.

REV'#	DATE	DESCRIPTION	BY

NOT VALID FOR CONSTRUCTION UNLESS SIGNED AND DATED.

WADETRIM
500 Griswold, Suite 2500
Detroit, MI 48226
313.961.3650
FAX 313.961.0898
www.wadetrim.com

Building relationships on a foundation of excellence

CITY OF DETROIT
DEPARTMENT OF PUBLIC WORKS
CITY ENGINEERING DIVISION
DIVISION ST. OVER DEQUINDRE CUT S.N. 12467
FOOTING PLAN

ISSUED FOR: DATE: BY:

JOB NO. DTE 2025-10T

SHEET 20 (460)

DIVISION STREET BRIDGE

© Wade Trim Group, Inc.

PROJECT MANAGER: - FIELD BOOK INFORMATION: -
c:\pw_work\d0369109\CFP-PLTS-FootingPlan.dgn
PLOTTED 5/21/2013 10:29:49 AM BY mzoryck0

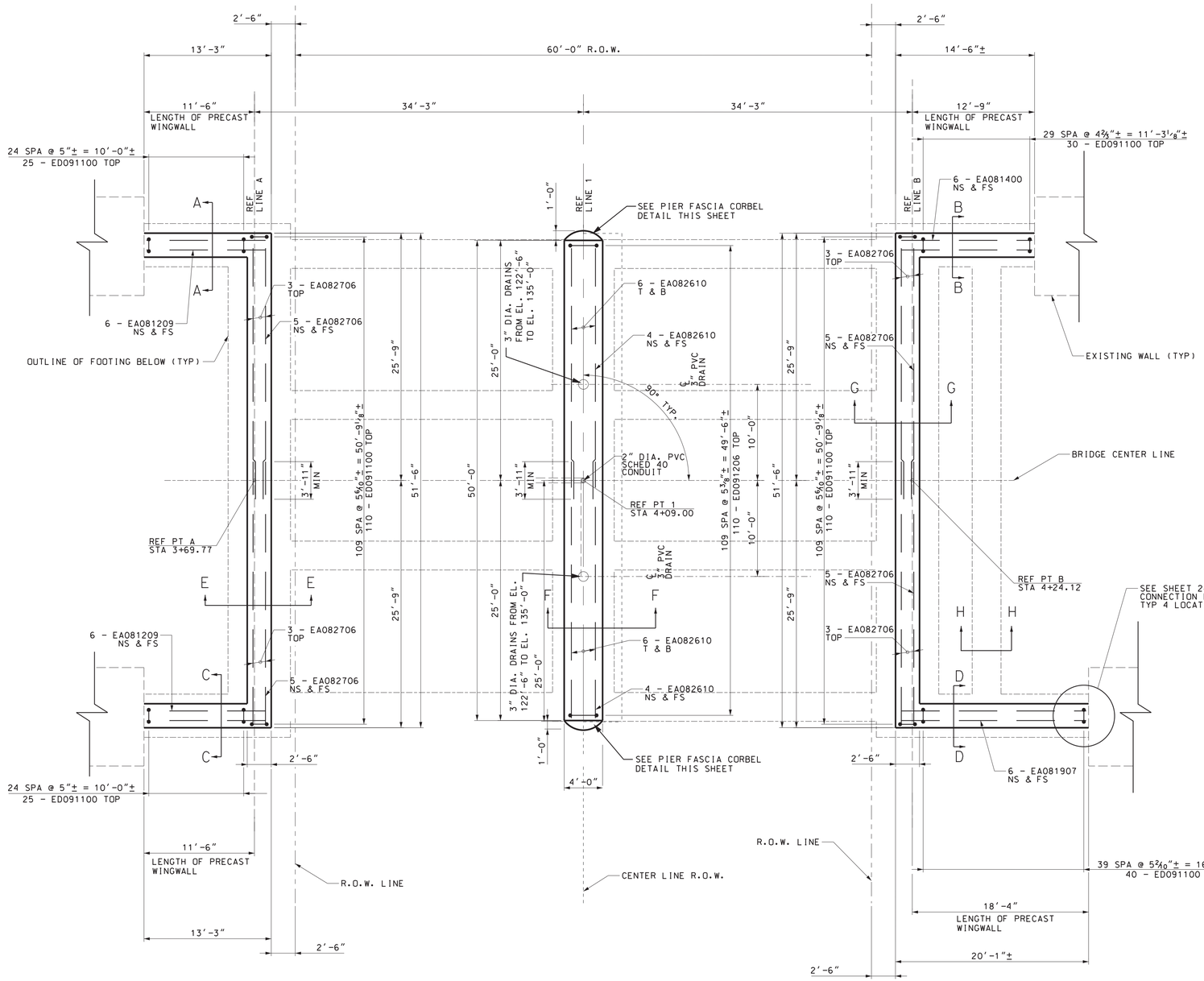

SILL WALL PLAN

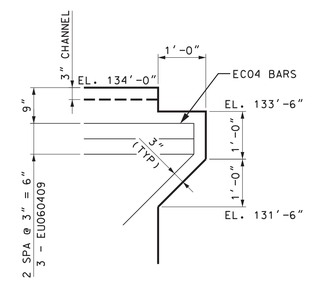

SECTION A-A

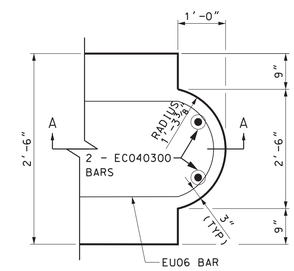

SECTIONAL PLAN

PIER FASCIA CORBEL DETAIL

TYP EACH END OF PIER

SILL WALL CONC QUANTITIES		
SUBSTRUCTURE CONC		
LOCATION	QUANTITY	UNIT
ABUT A	55	CYD
PIER 1	60	CYD
ABUT B	61	CYD

NOTES:

EXTENT OF EXISTING RETURN WALLS UNKNOWN. WALLS SHOWN IN PLAN ARE BASED ON EXISTING 1929 PLANS. CONTRACTOR TO FIELD VERIFY.

CONCRETE SURFACE COATING SHALL BE APPLIED TO THE ENTIRE EXPOSED SURFACES OF THE C.I.P. CONC SILL WALLS. SEE WALL DETAILS FOR EXTENT.

AT NO TIME PRIOR TO ERECTING ARCHES, SHALL THE HEIGHT OF THE BACKFILL ON THE BACKSIDE OF THE ABUTMENTS BE HIGHER THAT THE BACKFILL ON THE FRONT SIDE.

FOR VERTICAL BARS FROM FOOTING INTO SILL WALLS, SEE FOOTING PLAN.

REV#	DATE	DESCRIPTION	BY

NOT VALID FOR CONSTRUCTION UNLESS SIGNED AND DATED.

WADE TRIM
500 Griswold, Suite 2500
Detroit, MI 48226
313.961.3650
FAX 313.961.8666
www.wadetrim.com

Building relationships on a foundation of excellence

CITY OF DETROIT
DEPARTMENT OF PUBLIC WORKS
CITY ENGINEERING DIVISION
DIVISION ST. OVER DEQUINDRE CUT S.N. 124467
SILL WALL PLAN

ISSUED FOR: DATE: BY:

JOB NO. DTE 2025-10T

SHEET 21 (461)

DIVISION STREET BRIDGE

© Wade Trim Group, Inc.

PROJECT MANAGER: - FIELD BOOK INFORMATION: -
c:\pw_work\d0369109\CFP-PLTS-WallPlan.dgn
PLOTTED 5/21/2013 10:32:17 AM BY mzarzycka

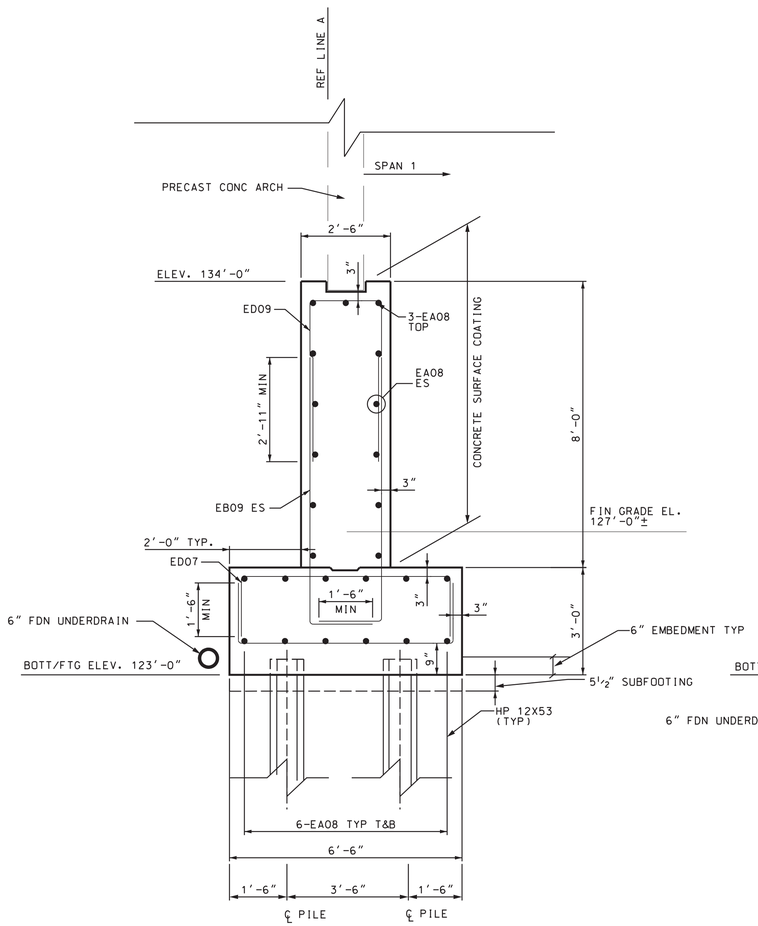

SECTION E-E

SCALE: ½' = 1'

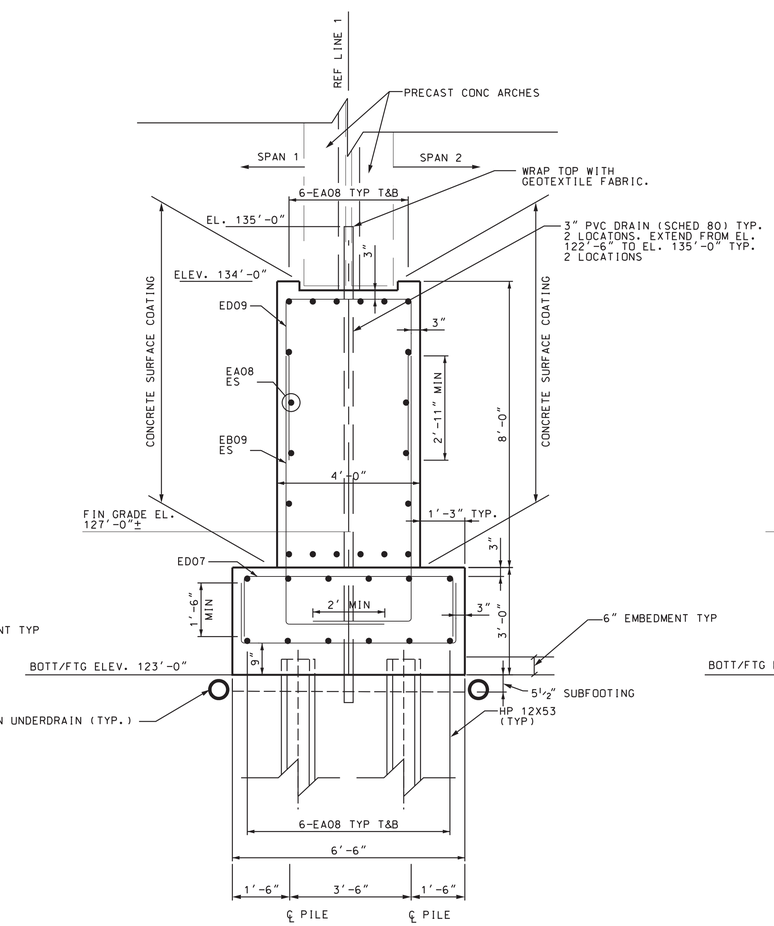

SECTION F-F

SCALE: ½' = 1'

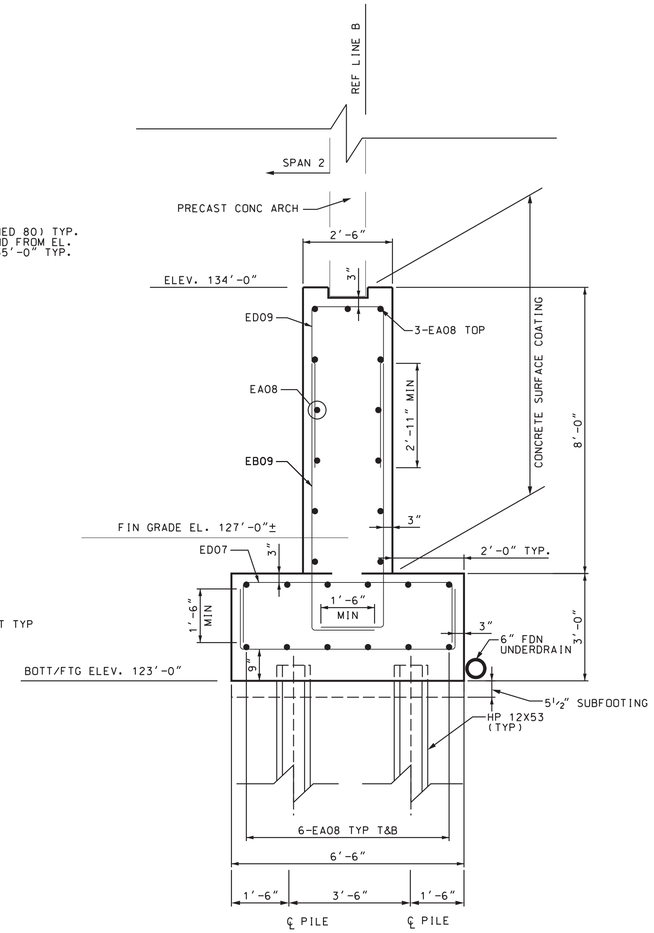

SECTION G-G

SCALE: ½' = 1'

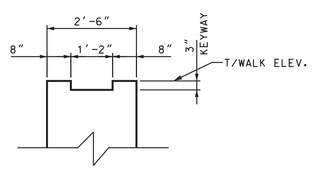

@ ABUTMENT

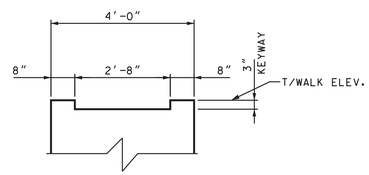

@ PIER

KEYWAY DETAILS

NO SCALE

MISCELLANEOUS QUANTITES		
26	CYD	CONC. GRADE S2. SUBFOOTING
393	CYD	SUBSTRUCTURE CONC
505	SYD	CONC SURFACE COATING
750	SFT	STEEL SHEET PILING. TEMP. LEFT-IN-PLACE
416	SYD	CONC. LOW TEMPERATURE PROTECTION
16	EA	PROTECTIVE SLEEVE. FIBER OPTIC LINE

NOTES:

SEE DETAILS, SHEETS 19 & 20 FOR LIMITS OF TEMPORARY SHEETING.

SEE SPECIAL PROVISION FOR CONC SURFACE COATING

JWP DENOTES JOINT WATERPROOFING.

NS DENOTES NEAR SIDE.

FS DENOTES FAR SIDE.

ES DENOTES EACH SIDE.

FOR BEVEL AND MOLDING DETAILS, SEE STANDARD PLAN B-103-SERIES.

FOR PILE QUANTITIES, LAYOUT, AND NOTES, SEE SHEET 15.

LOW TEMPERATURE PROTECTION OF CONCRETE SHALL BE APPLIED ACCORDING TO SECTION 706.03 J. OF THE STANDARD SPECIFICATIONS FOR CONSTRUCTION. LOW TEMPERATURE PROTECTION OF CONCRETE WILL NOT BE PAID FOR SEPARATELY, BUT WILL BE INCLUDED IN THE BID ITEM "SUBSTRUCTURE CONC."

REV#	DATE	DESCRIPTION	BY

NOT VALID FOR CONSTRUCTION UNLESS SIGNED AND DATED.

WADE TRIM
Building relationships on a foundation of excellence
500 Griswold, Suite 2500
Detroit, MI 48226
313.961.3650
FAX 313.961.9998
www.wadetrim.com

CITY OF DETROIT
DEPARTMENT OF PUBLIC WORKS
CITY ENGINEERING DIVISION
DIVISION ST. OVER DEQUINDRE CUT S.N. 124467
SILL WALL DETAILS

ISSUED FOR: DATE: BY:

JOB NO. DTE 2025-10T

SHEET 22 (462)

DIVISION STREET BRIDGE

© Wade Trim Group, Inc.

PROJECT MANAGER: - FIELD BOOK INFORMATION: -
c:\pw_work\d0359109\CSP-PLTS-SWWallDetails.dgn
PLOTTED 5/21/2013 10:37:46 AM BY mszarzycka

NOTES

FOR DETAILS OF TEXTURING CONCRETE @ BRIDGE RAILINGS. SEE SHEETS 26-28.

A RUBBED SURFACE FINISH ON THE VERTICAL OUTSIDE SURFACES OF THE PRECAST WALLS IS REQUIRED FOR THIS STRUCTURE.

SEE SPECIAL PROVISIONS FOR CONCRETE SURFACE COATING.

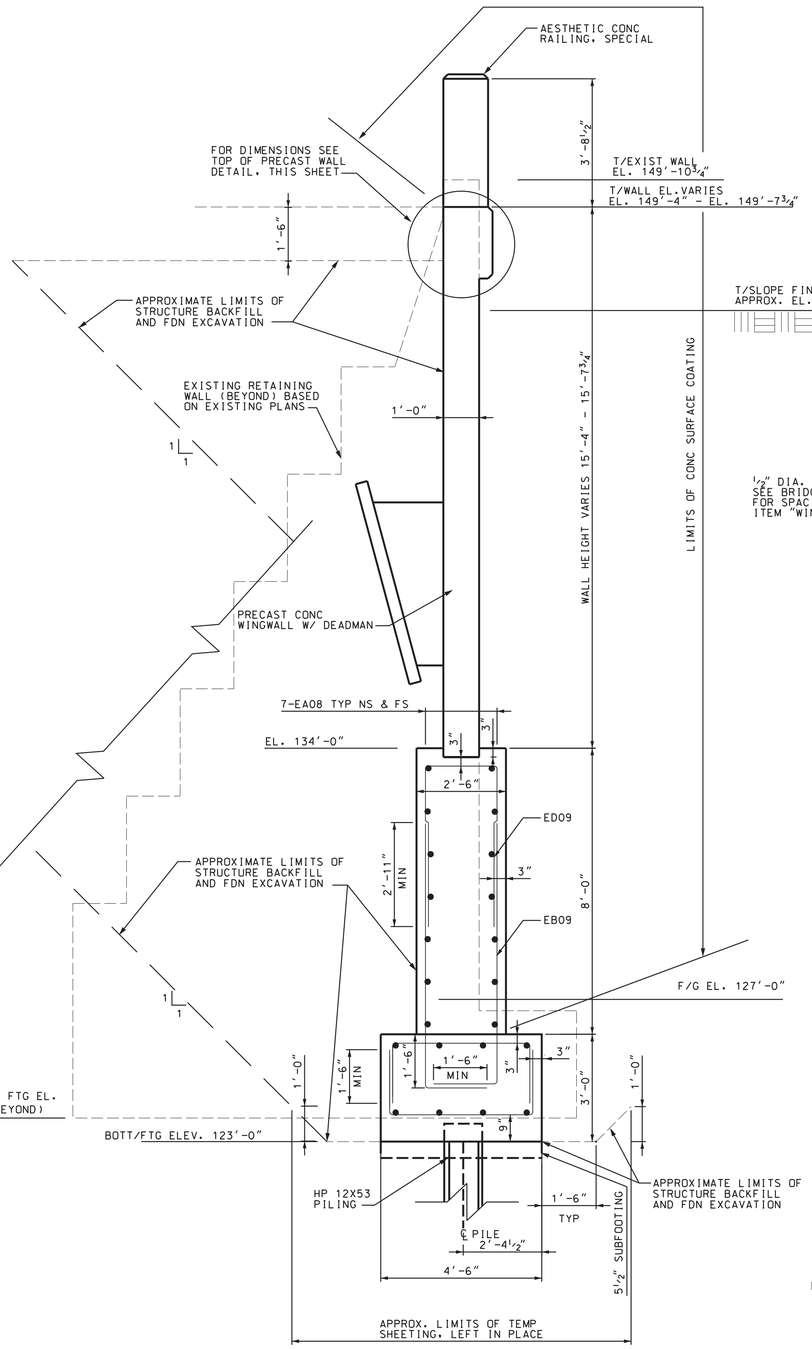

SECTION A-A

SCALE: ½' = 1'

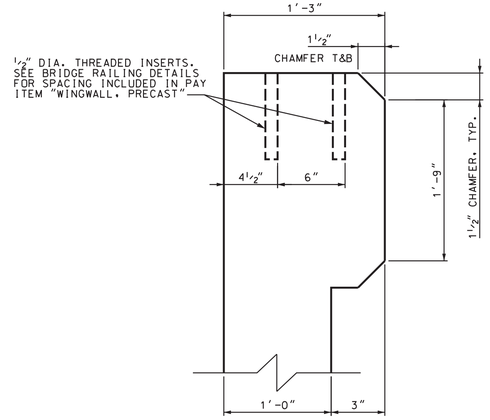

TOP OF PRECAST WALL DETAIL

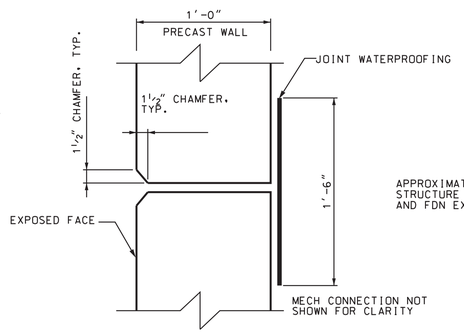

VERTICAL WALL JOINT DETAIL

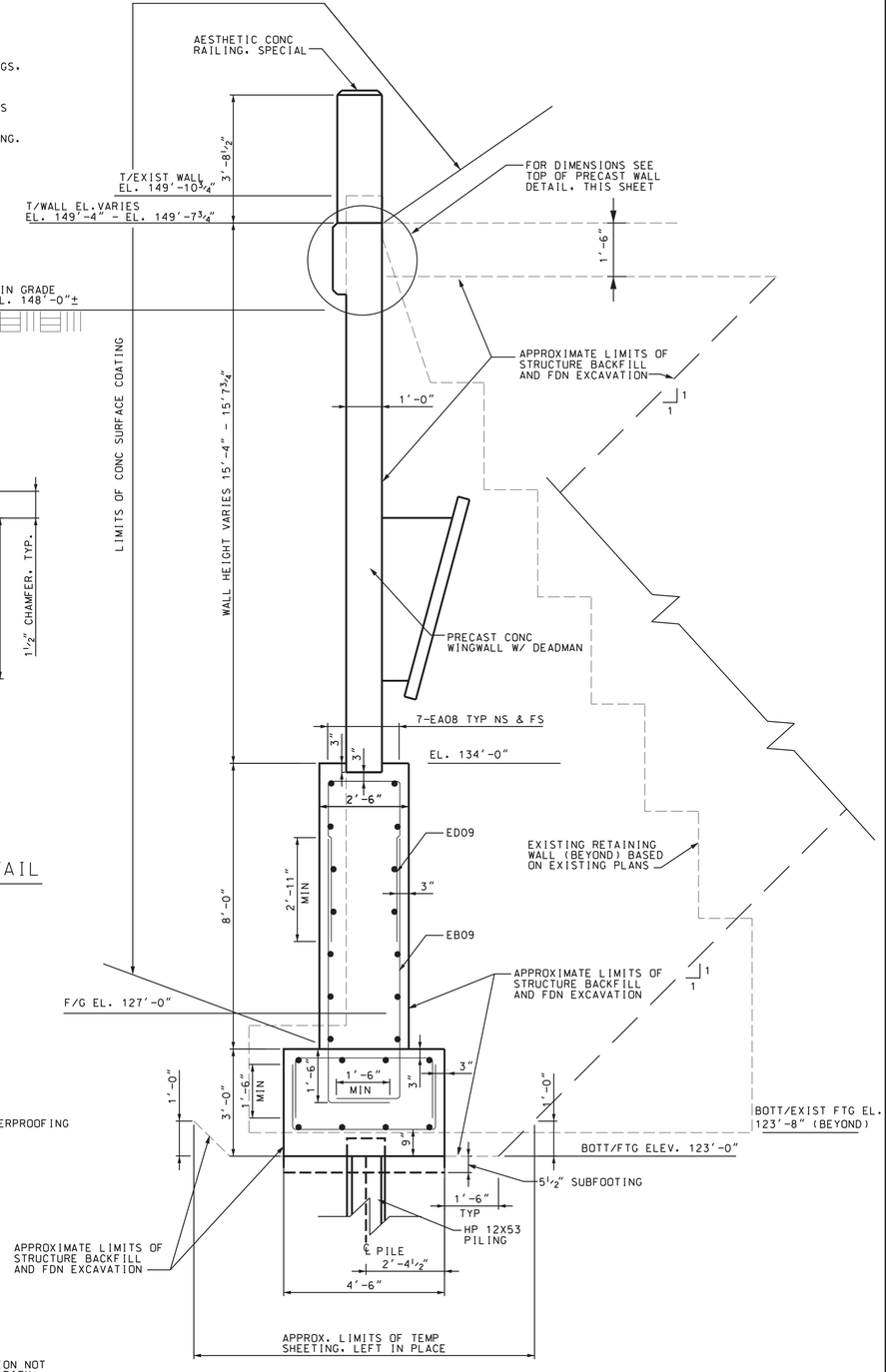

SECTION C-C

SCALE: ½' = 1'

REV#	DATE	DESCRIPTION	BY

NOT VALID FOR CONSTRUCTION UNLESS SIGNED AND DATED:

WADETRIM

Building relationships on a foundation of excellence

500 Griswold, Suite 2500
Detroit, MI 48226
313.961.3650
FAX 313.961.3651
www.wadetrim.com

CITY OF DETROIT
DEPARTMENT OF PUBLIC WORKS
CITY ENGINEERING DIVISION
DIVISION ST. OVER DEQUINDRE CUT S.N. 12467
WINGWALL DETAILS

ISSUED FOR: DATE: BY:

JOB NO. DTE 2025-10T

SHEET 23 (463)

DIVISION STREET BRIDGE

© Wade Trim Group, Inc.

PROJECT MANAGER: - FIELD BOOK INFORMATION: -
c:\pw_work\d0369103\CWP-PLTS-WadeTotalPlanWest1.dgn
PLOTTED 5/21/2013 10:40:04 AM BY mszarzycko

NOTES

FOR DETAILS OF TEXTURING CONCRETE @ BRIDGE RAILINGS. SEE SHEETS 26-28.

A RUBBED SURFACE FINISH ON THE VERTICAL OUTSIDE SURFACES OF THE PRECAST WALLS IS REQUIRED FOR THIS STRUCTURE.

SEE SPECIAL PROVISIONS FOR CONCRETE SURFACE COATING.

EXISTING 1929 PLANS INDICATE BLDG FDN THIS AREA. IT IS UNKNOWN IF BLDG FOUNDATIONS HAVE PREVIOUSLY BEEN REMOVED. IF FOUNDATIONS ARE ENCOUNTERED, CONTRACTOR SHALL REMOVE WITH CAUTION-WITHIN LIMITS OF GRADING EASEMENT. BACKFILL WITH STRUCTURE BACKFILL AND COMPACT. PER STD. SPECIFICATIONS. REMOVAL SHALL BE INCLUDED IN PAY ITEM "STRUCTURES, REM PORTIONS, MODIFIED"

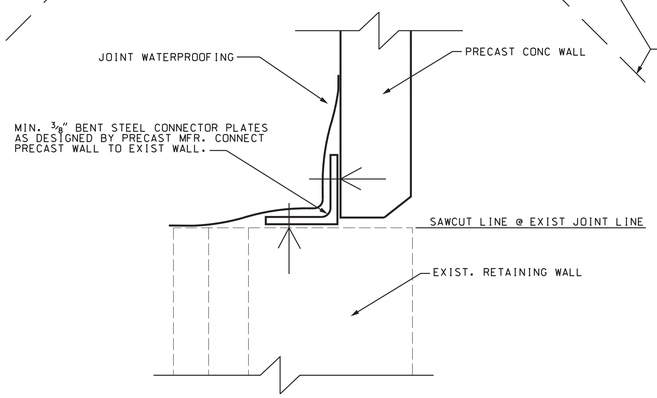

PROP - EXIST WALL CONNECTION DETAIL

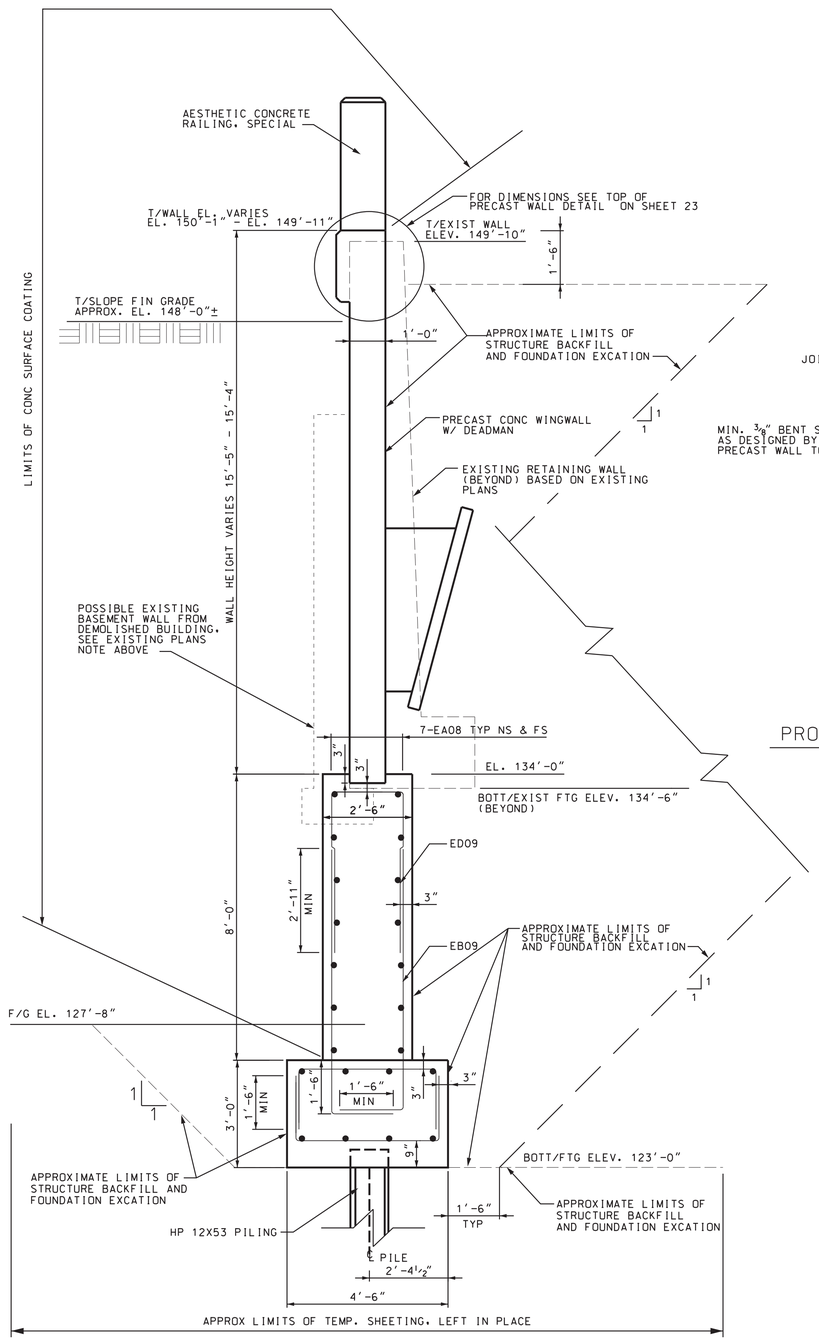

SECTION B-B

SCALE: ½' = 1'

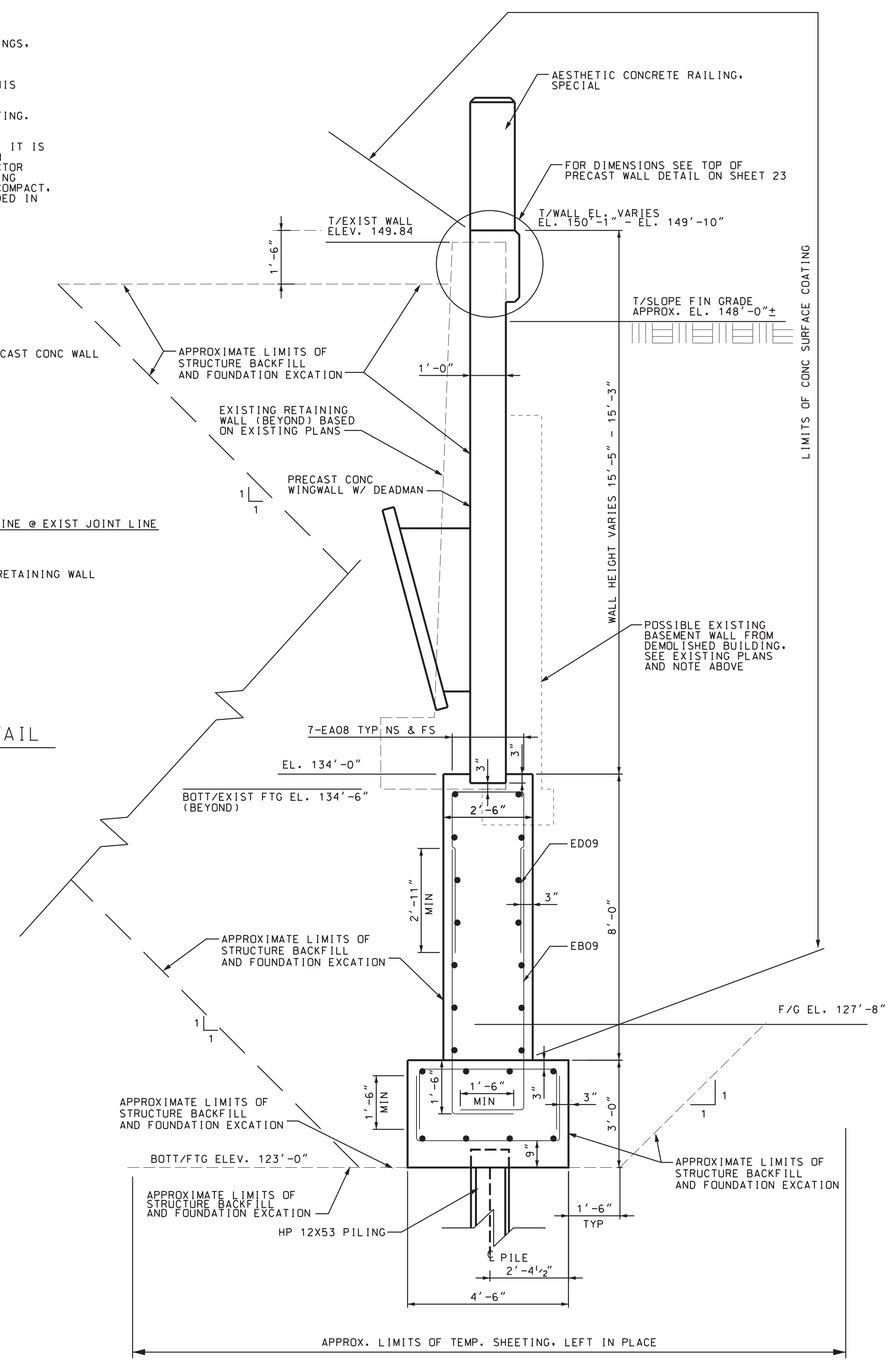

SECTION D-D

SCALE: ½' = 1'

REV#	DATE	DESCRIPTION	BY

NOT VALID FOR CONSTRUCTION UNLESS SIGNED AND DATED.

WADETRIM
500 Griswold, Suite 2500
Detroit, MI 48226
313.961.3650
FAX 313.961.8996
www.wadetrim.com
Building relationships on a foundation of excellence

CITY OF DETROIT
DEPARTMENT OF PUBLIC WORKS
CITY ENGINEERING DIVISION
DIVISION ST. OVER DEQUINDRE CUT S.N. 124467
WINGWALL DETAILS

ISSUED FOR: DATE: BY:

JOB NO. DTE 2025-10T

SHEET 24 (464)

DIVISION STREET BRIDGE

© Wade Trim Group, Inc.

PROJECT MANAGER: -
FIELD BOOK INFORMATION: -
c:\pw_work\d0359109\CWP-PLTS-WallDetailPlanEast2.dgn
PLOTTED 5/21/2013 10:41:14 AM BY mszarzycka

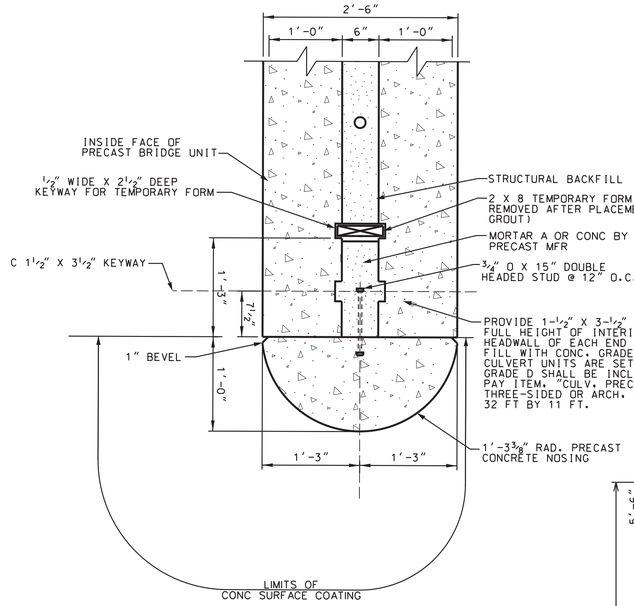

PIER FASCIA DETAIL

SEE DEQUINDRE CUT ELECTRICAL DRAWINGS FOR UNDERBRIDGE LIGHTING DIAGRAMS

NOTES:

JWP DENOTES JOINT WATERPROOFING

FOR DETAILS OF NAME PLATES, MOLDINGS AND BEVELS, SEE STD PLAN B-103 SERIES.

FOR NAME PLATE LOCATION, SEE GENERAL PLAN OF STRUCTURE SHEET.

A RUBBED SURFACE FINISH ON THE VERTICAL OUTSIDE SURFACE OF THE PRECAST CONC HEADWALLS IS REQUIRED ON THIS STRUCTURE.

COORDINATE LOCATION OF 4" DIA. PVC CONDUIT @ HEADWALLS WITH RAILING DETAILS ON SHEET 26.

PRECAST PIER FASCIA IS INCLUDED IN PAY ITEM "CULV. PRECAST THREE-SIDED OR ARCH. MODIFIED. 32 FT BY 11 FT".

PRECAST CONC HEADWALL IS INCLUDED IN THE PAY ITEM "CULV. PRECAST THREE-SIDED OR ARCH. MODIFIED. 32 FT BY 11 FT". ESTIMATED TOTAL LENGTH = 137 FT.

ALL PRECAST ELEMENTS SHALL HAVE 28 DAY COMPRESSIVE STRENGTH f'c = 5,000 PSI MINIMUM.

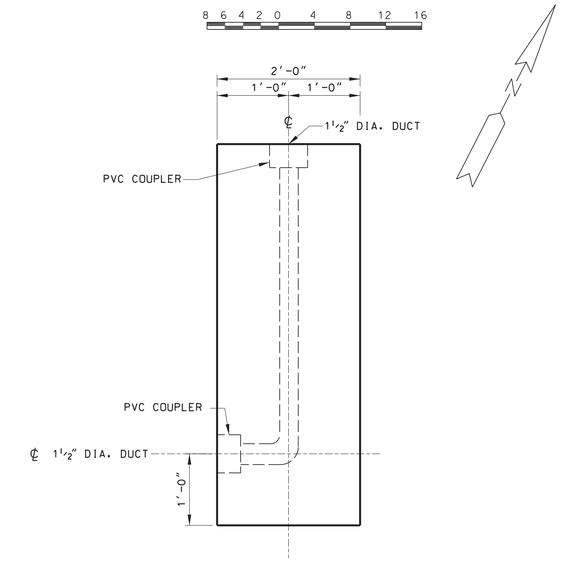

SECTION A-A

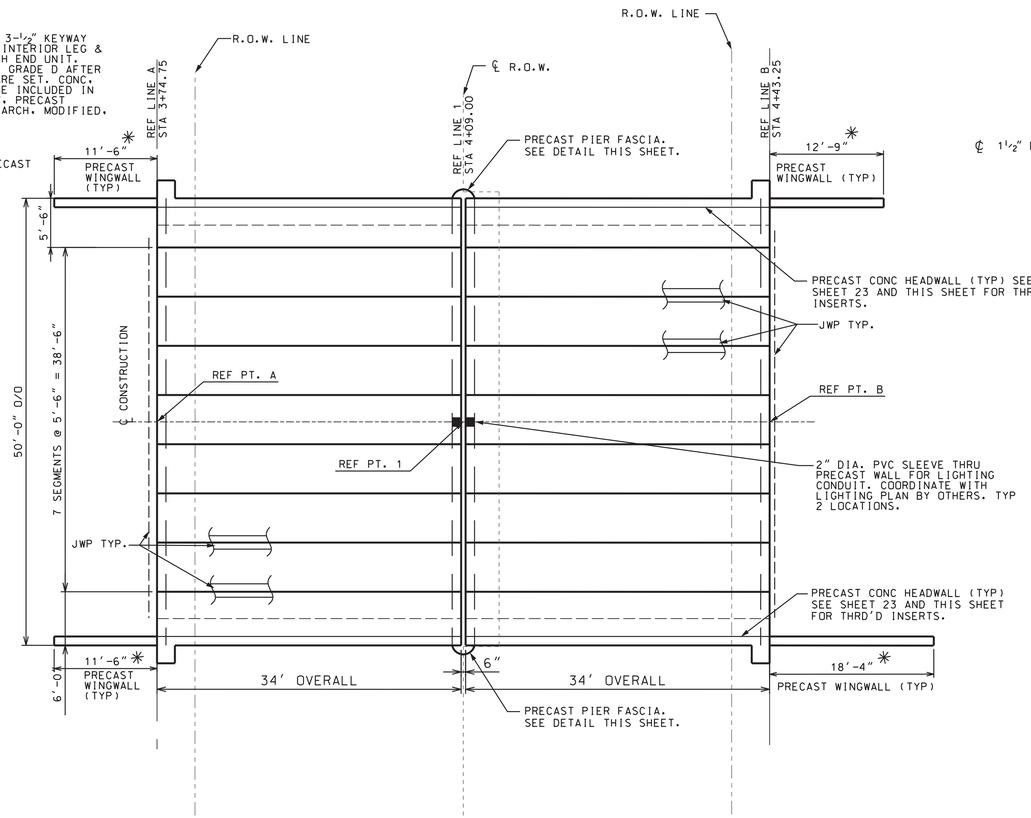

PRECAST ARCH LAYOUT PLAN

* CONTRACTOR TO FIELD VERIFY PRECAST WALL LENGTHS PRIOR TO FABRICATION.

DESCRIPTION	DEAD LOAD	LIVE LOAD	TOTAL LOAD
RH (HORIZ)	2.9 K/FT	2.7 K/FT	5.6 K/FT
RV (VERT)	17.1 K/FT	6.4 K/FT	23.5 K/FT

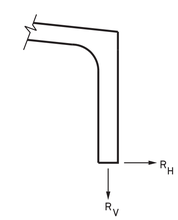

PRECAST ARCH REACTIONS

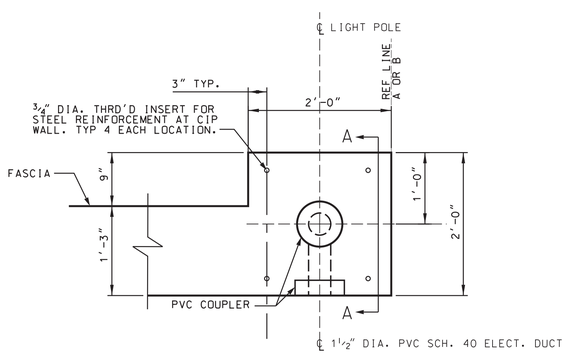

PRECAST HEADWALL DETAIL

(TYP. 4 CORNERS)

REACTION NOTES:

REACTIONS SHOWN ARE UNFACTORED LOADS.

LIVE LOAD REACTIONS SHOWN ARE MAXIMUM REACTION BASED ON VARYING AXLE LOAD POSITIONS.

IMPACT IS NOT INCLUDED.

DEAD LOAD REACTIONS INCLUDE PRECAST UNIT AND WEIGHT OF SOIL AT A UNIT WEIGHT OF 120 PCF.

PRIOR TO START OF CONSTRUCTION, CONTRACTOR SHALL PROVIDE ENGINEER WITH REACTIONS FROM PRECAST MANUFACTURER FOR PROJECT. THE REACTIONS SHALL BE REVIEWED BY THE ENGINEER PRIOR TO PRECAST FABRICATION.

TOP/HEADWALL ELEVATIONS

LOCATION	REF LINE	ELEV (DCD)
NORTH HEADWALL	'A'	149.73
	'1'	150.09
	'B'	149.85
SOUTH HEADWALL	'A'	149.73
	'1'	150.09
	'B'	149.85

MISCELLANEOUS QUANTITIES

100	FT	CULV. PRECAST THREE-SIDED OR ARCH. MODIFIED 32 FOOT BY 11 FOOT
840	SFT	WINGWALL, PRECAST
1080	SFT	JOINT WATERPROOFING
70	SYD	CONC SURFACE COATING

REV#	DATE	DESCRIPTION	BY

NOT VALID FOR CONSTRUCTION UNLESS SIGNED AND DATED:

WADETRIM
500 Griswold, Suite 2900
Detroit, MI 48226
313.961.3650
FAX 313.961.0998
www.wadetrim.com

Building relationships on a foundation of excellence

CITY OF DETROIT
DEPARTMENT OF PUBLIC WORKS
CITY ENGINEERING DIVISION
DIVISION ST. OVER DEQUINDRE CUT S.N. 12467
PRECAST CONCRETE PLAN & DETAILS

ISSUED FOR: DATE: BY:

JOB NO. DTE 2025-10T

SHEET 25 (465)

DIVISION STREET BRIDGE

© Wade Trim Group, Inc.

PROJECT MANAGER: - FIELD BOOK INFORMATION: -
c:\pw_work\d0359109\CPP-PLTS-PrecastLayout.dgn
PLOTTED 5/21/2013 10:43:09 AM BY mszarzycka

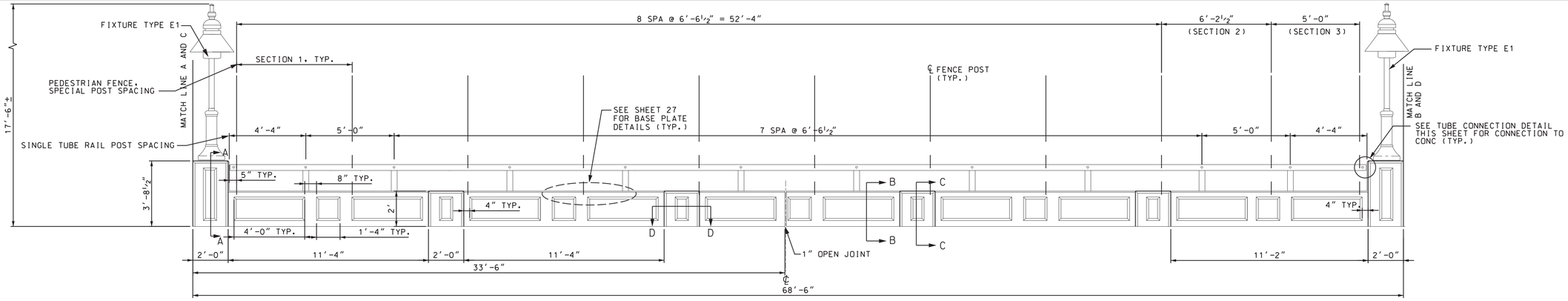

ELEVATION VIEW

NO SCALE

NOTE:
VIEW FROM CENTERLINE OF ROAD LOOKING AT INNER FACE OF RAILING.

TEXTURED CONCRETE SURFACE TYP. BOTH SIDES OF RAILING

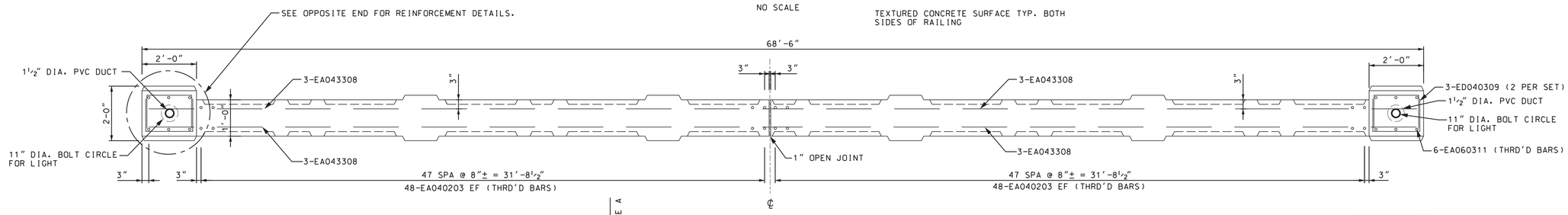

PLAN VIEW

NO SCALE

NOTE:
AESTHETIC PARAPET TUBE NOT SHOWN FOR CLARITY

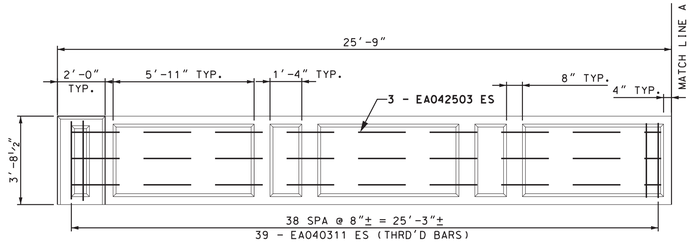

TEXTURED CONCRETE SURFACE TYP. BOTH SIDES OF RAILING

NW QUADRANT

MISCELLANEOUS QUANTITIES

137 FT	BRIDGE RAILING, AESTHETIC PARAPET TUBE, DETAIL 2, MODIFIED
61 FT	AESTHETIC CONCRETE RAIL, SPECIAL
115 SYD	TEXTURING CONC
822 SFT	PEDESTRIAN FENCE, SPECIAL

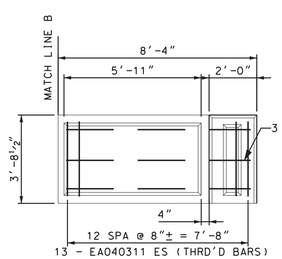

NE QUADRANT

TEXTURED CONCRETE SURFACE TYP. BOTH SIDES OF RAILING

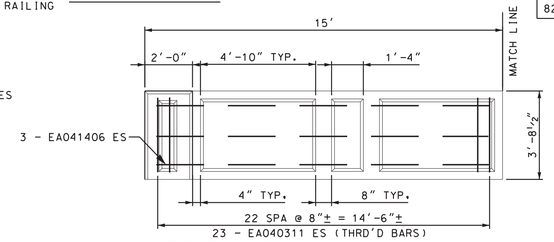

TEXTURED CONCRETE SURFACE TYP. BOTH SIDES OF RAILING

SE QUADRANT

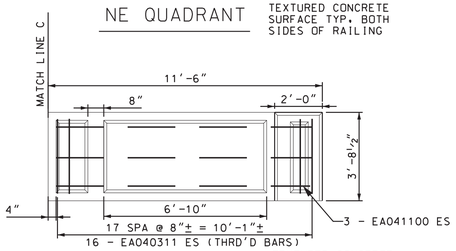

SW QUADRANT

TEXTURED CONCRETE SURFACE TYP. BOTH SIDES OF RAILING

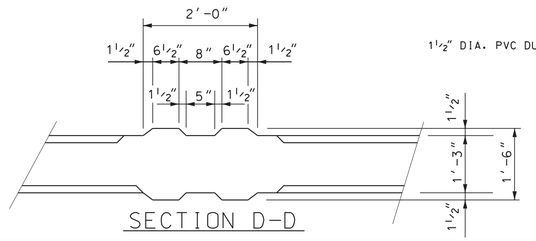

SECTION D-D

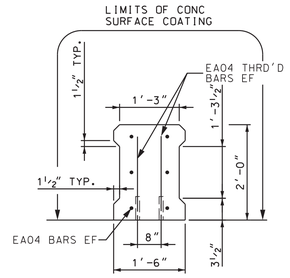

SECTION C-C

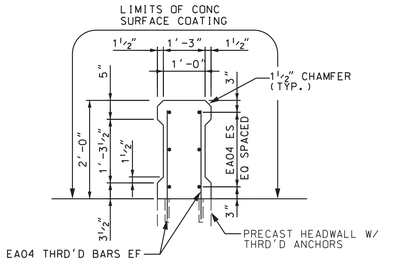

SECTION B-B

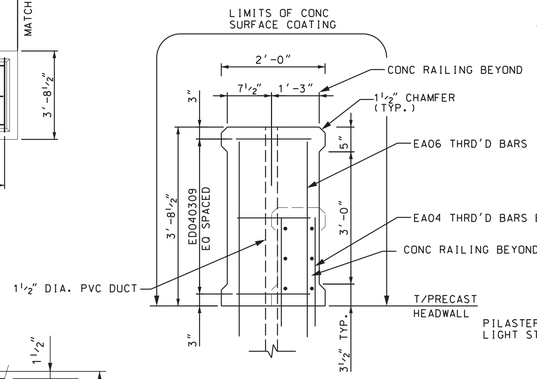

SECTION A-A

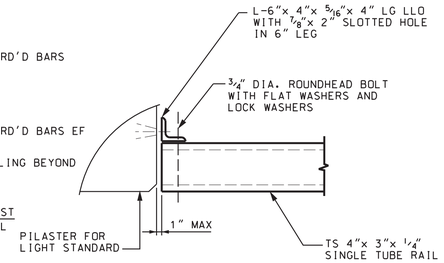

TUBE CONNECION DETAIL

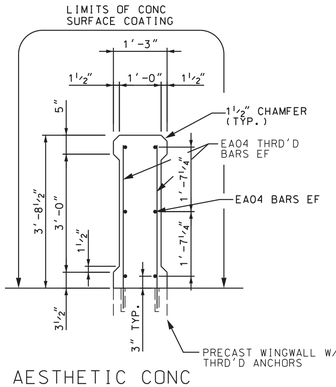

AESTHETIC CONC RAILING, SPECIAL - DETAIL

WORK THIS SHEET WITH SHEETS 27-28

REV#	DATE	DESCRIPTION	BY

NOT VALID FOR CONSTRUCTION UNLESS SIGNED AND DATED:

WADE TRIM
500 Griswold, Suite 2500
Detroit, MI 48226
313.961.3650
FAX 313.961.3660
www.wadetrim.com

Building relationships on a foundation of excellence

CITY OF DETROIT
DEPARTMENT OF PUBLIC WORKS
CITY ENGINEERING DIVISION
DIVISION ST. OVER DEQUINDRE CUT S.N. 12467
RAILING DETAIL SHEET

ISSUED FOR: DATE: BY:

JOB NO. DTE 2025-10T

SHEET 26 (466)

DIVISION STREET BRIDGE

© Wade Trim Group, Inc.

PROJECT MANAGER: -
FIELD BOOK INFORMATION: -
z:\nw_work\d0359109\CRP-PLTS-RailingDetailPlan.dgn
PLOTTED 5/21/2013 10:53:26 AM BY mzarzycka

FENCE POST SPACING ON BRIDGE			
	LENGTH		
SECTION	A	B	C
1	6'-6 1/2"	6'-0"	2'-7 3/4""
2	6'-2 1/2"	5'-8"	2'-5 3/4"
3	5'-0"	4'-5 1/2"	1'-10 1/2"

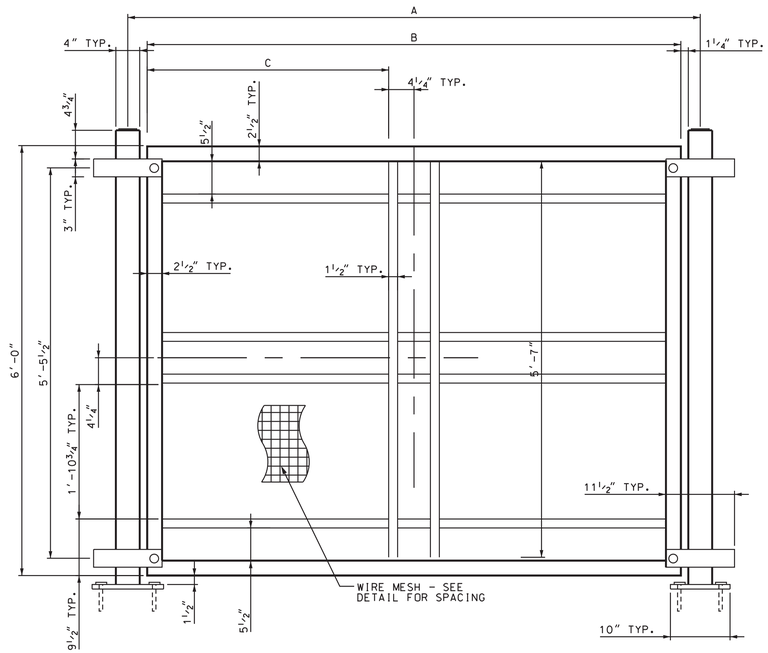

TYPICAL FENCE PANEL SECTION ON BRIDGE

ALL SECTIONS & POSTS TO BE PAINTED BLACK

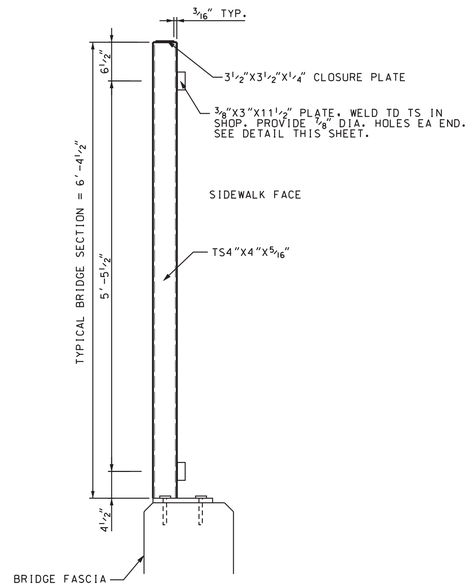

FENCE POST DETAIL

ALL SECTIONS & POSTS TO BE PAINTED BLACK

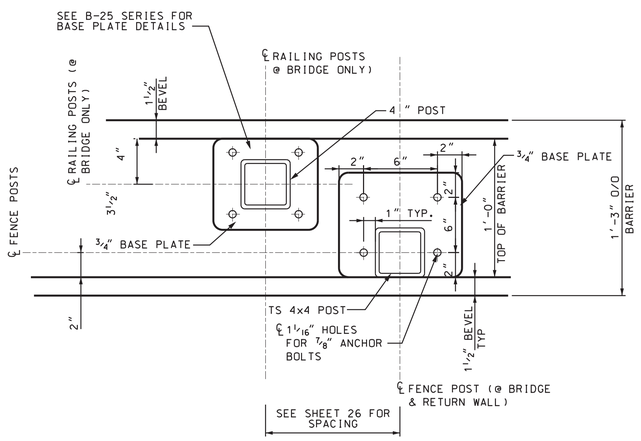

POST BASE PLATE DETAILS

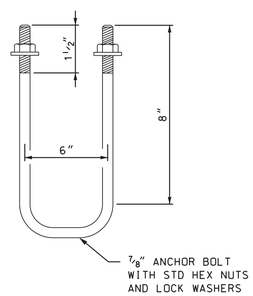

FENCE POST ANCHOR BOLT DETAIL

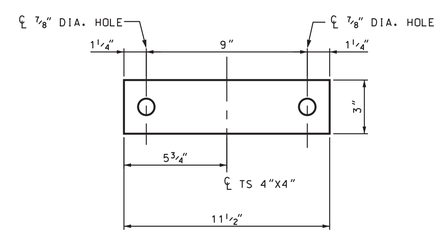

FENCE PANEL CONNECTION PLATE DETAIL

WORK WITH SHEETS 26, 28

REV#	DATE	DESCRIPTION	BY

NOT VALID FOR CONSTRUCTION UNLESS SIGNED AND DATED.

WADETRIM
500 Griswold, Suite 2500
Detroit, MI 48226
313.961.3650
FAX 313.961.8988
www.wadetrim.com

Building relationships on a foundation of excellence

CITY OF DETROIT
DEPARTMENT OF PUBLIC WORKS
CITY ENGINEERING DIVISION
DIVISION ST. OVER DEQUINDRE CUT S.N. 12467
PEDESTRIAN FENCE DETAILS

ISSUED FOR: DATE: BY:

JOB NO. DTE 2025-10T

SHEET 27 (467)

DIVISION STREET BRIDGE

© Wade Trim Group, Inc.

PROJECT MANAGER: - FIELD BOOK INFORMATION: -
c:\pw_work\d0369093\CSP-PLTS-PedestrianFenceDetails.dgn
PLOTTED 5/21/2013 10:54:48 AM BY mzorzycka

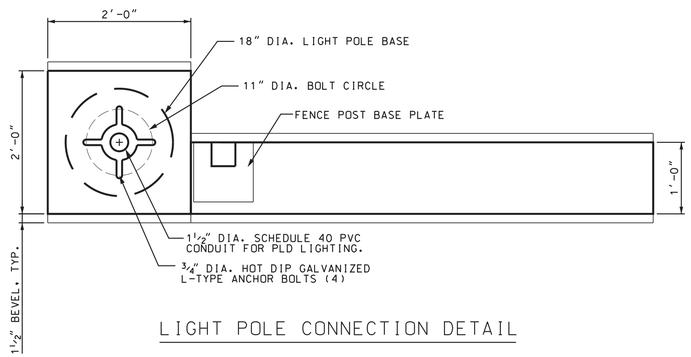

LIGHT POLE CONNECTION DETAIL

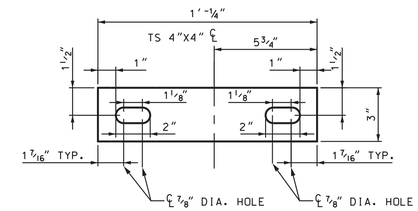

FENCE PANEL EXPANSION PLATE DETAIL

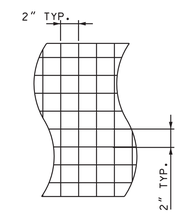

FENCE FABRIC DETAIL

WORK WITH SHEETS 26-27

REV#	DATE	DESCRIPTION	BY

NOT VALID FOR CONSTRUCTION UNLESS SIGNED AND DATED

WADE TRIM
500 Griswold, Suite 2500
Detroit, MI 48226
313.961.3650
FAX 313.961.0998
www.wadetrim.com

Building relationships on a foundation of excellence

CITY OF DETROIT
DEPARTMENT OF PUBLIC WORKS
CITY ENGINEERING DIVISION
DIVISION ST. OVER DEQUINDRE CUT S.N. 12467
PEDESTRIAN FENCE DETAILS

ISSUED FOR: DATE: BY:

JOB NO. DTE 2025-10T

SHEET 28 (468)

DIVISION STREET BRIDGE

© Wade Trim Group, Inc.

PROJECT MANAGER: -
FIELD BOOK INFORMATION: -
c:\pw_work\d0369109\CSP-PLTS-PedestrianFenceDetails2.dgn
PLOTTED 5/21/2013 10:56:40 AM BY mzarzycka

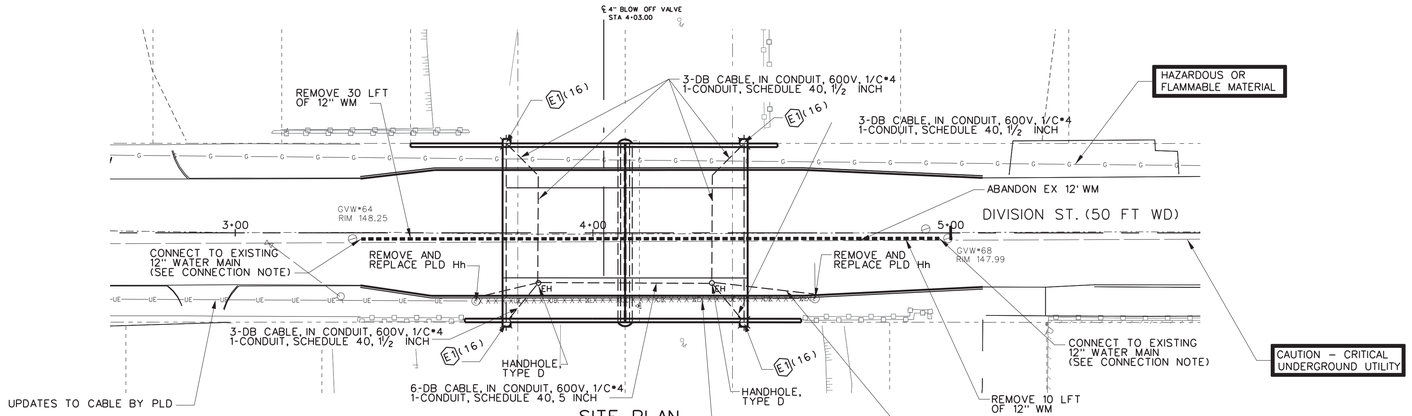

SITE PLAN

SCALE: 1"=20'

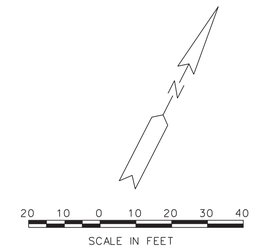

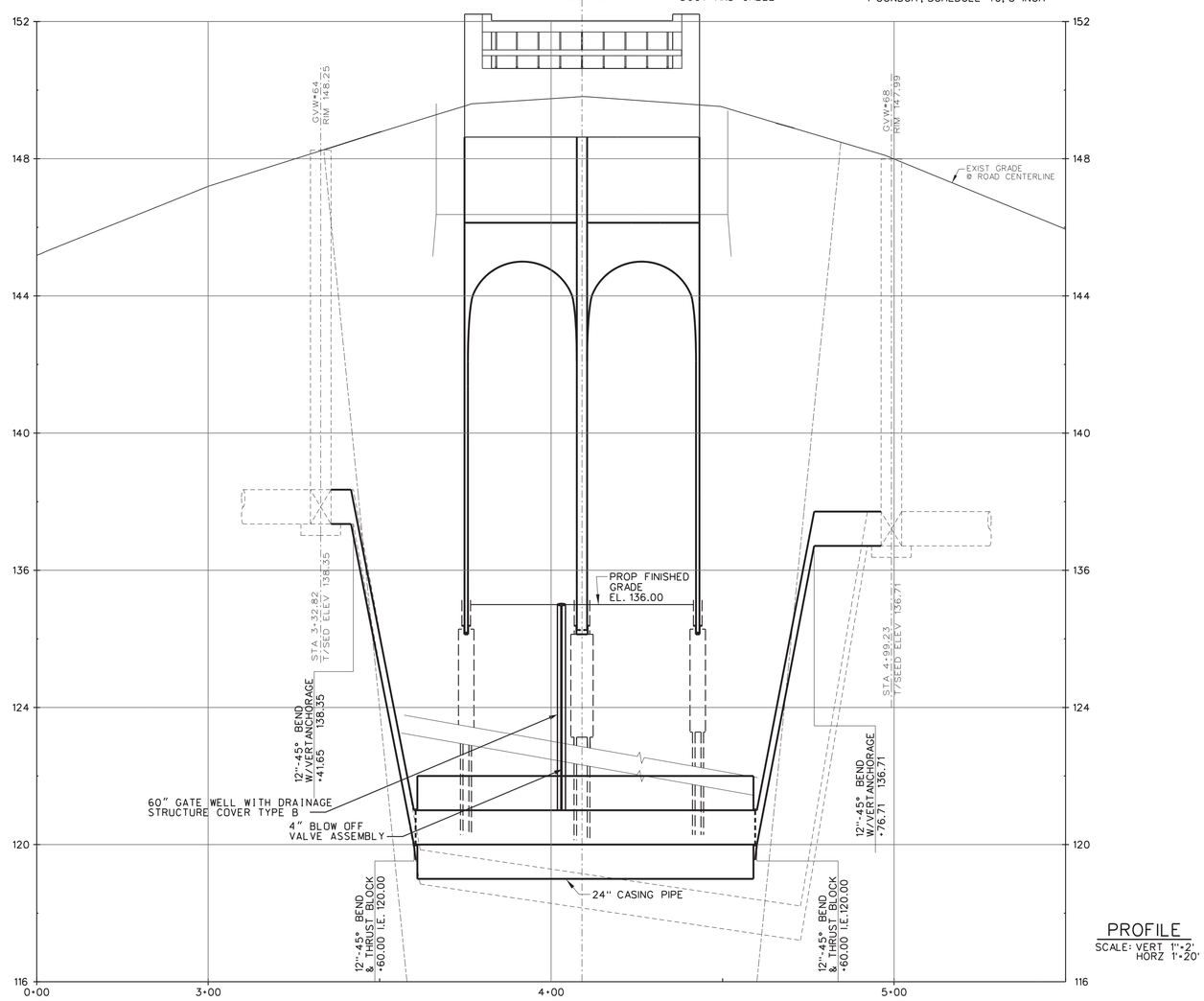

PROFILE

SCALE: VERT 1"=2'
HORZ 1"=20'

WATER MAIN QUANTITIES

167	FT	WATER MAIN, DI, 12 INCH, TR DET G
4	CYD	FLOWABLE FILL NON-STRUCTURAL
40	FT	WATER MAIN, REM
1	EA	GATE VALVE & BOX, 4 INCH
98	FT	STEEL CASING PIPE, 24 INCH, TR DET G
1	EA	GATE WELL, 60 INCH DIA
1	EA	DR STRUCTURE COVER, TYPE B

PLD QUANTITIES

95	FT	CABLE, REM
115	FT	CONDUIT, SCHEDULE 40, 1½ INCH
95	FT	CONDUIT, SCHEDULE 40, 5 INCH
2	EA	Hh, REM
4	EA	Hh, TYPE D
4	EA	FIXTURE TYPE E1
750	FT	DB CABLE, IN CONDUIT, 600V, 1/C*4

PLD NOTES:

SEE SHEET 30 FOR PLD HANDHOLE DETAILS.

THE PVC CONDUIT SHALL BE PLACED IN THE FILL AREA BETWEEN TOP OF ARCHES AND ROADWAY SUBBASE. COORDINATE WITH PRECAST DWGS AS TO LOCATION OF DUCT CONNECTION AT PRECAST HEADWALL.

REMOVAL OF EXIST PLD CONDUIT IS INCLUDED IN THE PAY ITEM "STRUCTURE, REM PORTIONS, MODIFIED."

FOR DETAILS OF FIXTURE TYPE E1 SEE PROJECT SHEET 396 (WILKINS SHEET 30) FOR DETAILS AND FIXTURE SCHEDULE.

THE NUMBER FOLLOWING (E1) INDICATES POLE HEIGHT.

DWSD NOTES:

SEE SPECIAL PROVISIONS FOR WORKING AROUND DWSD FACILITIES.

SEE SHEET 31 FOR DWSD STANDARD DETAILS.

FOR DETAILS OF GATE WELL WITH BLOW OFF VALVE, SEE DWSD STANDARD DETAILS.

CONNECT NEW 12" D.I. WATER MAIN TO EXISTING WATER MAIN AFTER HYDROSTATIC AND BACTERIAL TEST HAVE BEEN SUCCESSFULLY COMPLETED AND REVIEWED BY THE ENGINEER. INCLUDE IN PAY ITEM "WATER MAIN, DI, 12 INCH, TR DET G".

IF TIMBER PILES ARE ENCOUNTERED CONTRACTOR TO CUT DOWN TO 6'-0" BELOW PIPE INVERT, THIS WORK SHALL BE INCLUDED IN PAY ITEM "WATER MAIN, REM".

CONTRACTOR SHALL COORDINATE INSTALLATION OF WATER MAIN WITH FIBER OPTIC LINES. SEE SPECIAL PROVISIONS.

REV.#	DATE	DESCRIPTION	BY

NOT VALID FOR CONSTRUCTION UNLESS SIGNED AND DATED:

WADETRIM
500 Griswold, Suite 2900
Detroit, MI 48226
313.961.3650
FAX 313.961.0966
www.wadetrim.com

Building relationships on a foundation of excellence

CITY OF DETROIT
DEPARTMENT OF PUBLIC WORKS
CITY ENGINEERING DIVISION
DIVISION ST. OVER DEQUINDRE CUT S.N. 124467
PLD/DWSD PLANS AND DETAILS

ISSUED FOR: DATE: BY:

DIVISION STREET BRIDGE

JOB NO. DTE 2025-10T

SHEET 29 (469)

© Wade Trim Group, Inc.

PROJECT MANAGER: -
FIELD BOOK INFORMATION: -
c:\pw_work\d0359109\CEP-PLTS-Plan of Site.dgn
PLOTTED 5/21/2013 11:01:56 AM BY mszarzycka

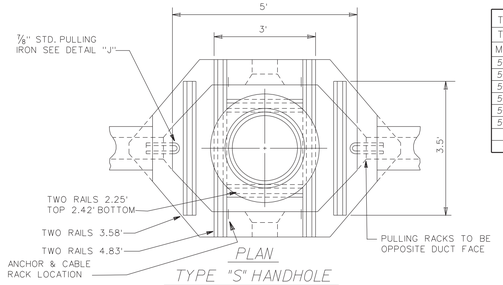

PLAN
TYPE "S" HANDHOLE
N.T.S.

TYPE "S" HANDHOLE TABLE FOR #5 BARS		
MARK	NO.	LENGTH
5-50	2	5'
5-46	8	4.5'
5-36	4	3.5'
5-30	6	2'
5-19	10	2'
5-10	8	12"

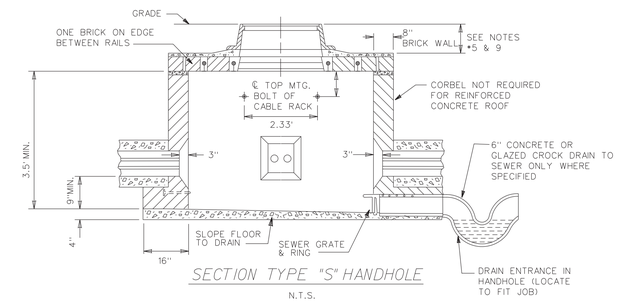

SECTION TYPE "S" HANDHOLE
N.T.S.

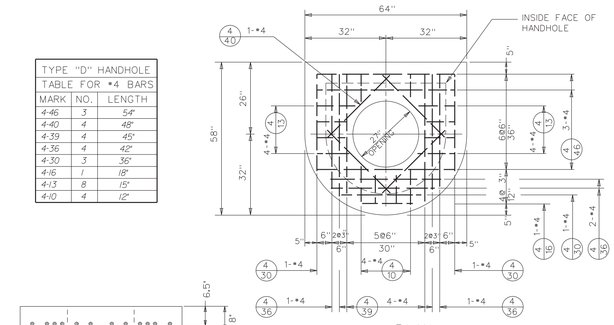

PLAN
ALTERNATE ROOF-TYPE "D" HANDHOLE
N.T.S.

TYPE "D" HANDHOLE TABLE FOR #4 BARS		
MARK	NO.	LENGTH
4-46	3	54"
4-40	4	48"
4-39	4	45"
4-36	4	42"
4-30	3	36"
4-16	1	18"
4-13	8	15"
4-10	4	12"

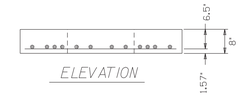

ELEVATION

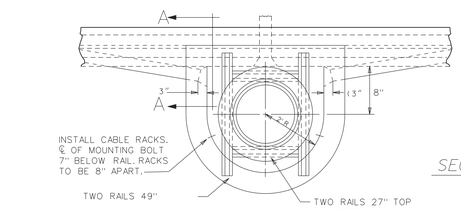

PLAN

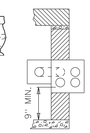

SECTION "A-A"

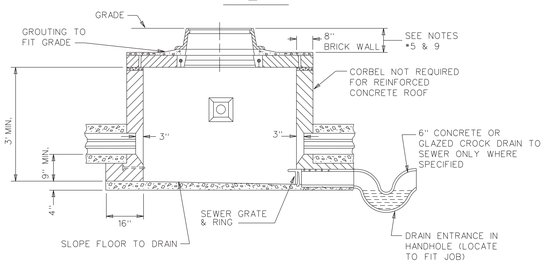

SECTION TYPE "D" HANDHOLE
N.T.S.

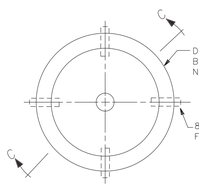

PLAN

NOTE:
BELL ENDS ARE REQUIRED ON EACH CONDUIT BROKEN OUT IN HANDHOLE. TYPE AND SIZE SHALL BE IDENTICAL TO CONDUIT TYPE AND SIZE.

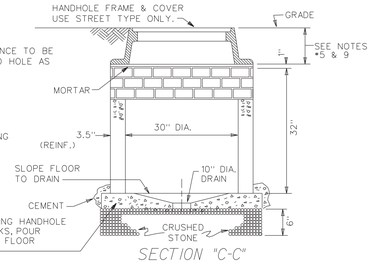

SECTION "C-C"
REINFORCED CONCRETE PIPE (CLASS III)
ROUND HANDHOLE

NOTE:
1. FRAMES MAY BE A.S.T.M. CLASS 30 GRAY IRON IF THE CONTRACTOR SO ELECTS.
2. ALL FILLETS ARE 0.5" RADIUS & ALL ROUNDS ARE 0.25" RADIUS

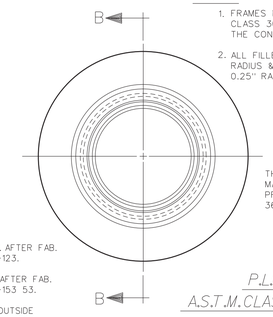

P.L.C. PATTERN NO.1A
A.S.T.M. CLASS 20 OR 30 GRAY IRON
APPROX. 251 LBS.
HANDHOLE FRAME

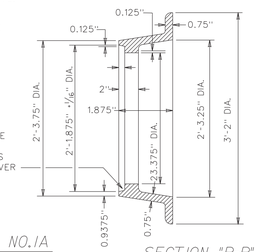

SECTION "B-B"

NOTE:
CABLE RACKS SHALL BE GALV. AFTER FAB. IN ACCORDANCE WITH ASTM A-123.
CABLE ARMS SHALL BE GALV. AFTER FAB. IN ACCORDANCE WITH ASTM A-153 53.
ARMS MUST FIT ON INSIDE & OUTSIDE OF RACKS & MUST ALLOW INSULATOR TO FIT LOOSELY.
USE 0.5" GALV. SUPPORTING BOLTS AND EXPANSION ANCHORS.

NOTE:
1. DUCT ENTRANCE TO BE BUILT AS REQUIRED.
2. ALL RAILS TO BE 60#/YD. OR HEAVIER.
3. CABLE PULLING IRONS TO BE GALVANIZED
4. CABLE RACKS AND ARMS TO BE GALVANIZED.
5. IN PAVEMENT PROVIDE AT LEAST 3" BETWEEN ROOF AND BASE OF PAVEMENT. WHERE EXISTING GRADE IS HIGHER THAN PROP. FUTURE GRADE INSTALL BRICK RING OR GROUT (AS REQ'D.) UNDER FRAME TO ALLOW FOR FUTURE FRAME ADJUSTMENT.
6. BAR NUMBERS DENOTE THE SIZE OF BAR REQUIRED IN ACCORDANCE WITH CURRENT USAGE SPECIFIED BY THE CONCRETE REINFORCING STEEL INSTITUTE.
7. EXCAVATION LIMITS FOR PUBLIC LIGHTING DEPARTMENT HANDHOLES SHALL BE ON VERTICAL PLANES OF THE FOOTING OUTLINE.
8. INSTALL ANCHORS & CABLE-RACKS AS SHOWN.
9. WHERE HANDHOLES ARE LOCATED BACK OF CURBS ROOF MUST BE BUILT 18" BELOW CURB GRADE, TO PROVIDE FOR FUTURE WIDENING.

CABLE RACKS
3" STD. 4.1# CHANNEL
N.T.S.

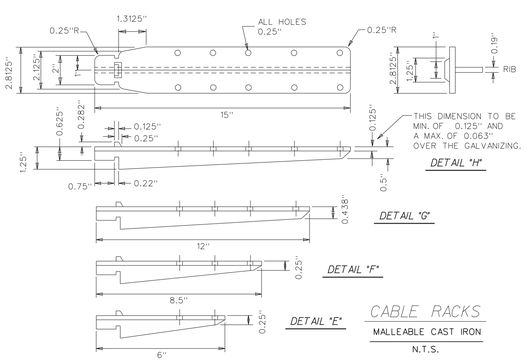

CABLE RACKS
MALLEABLE CAST IRON
N.T.S.

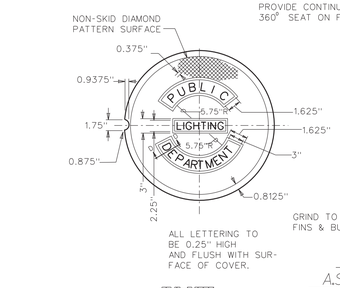

SECTION "D-D"

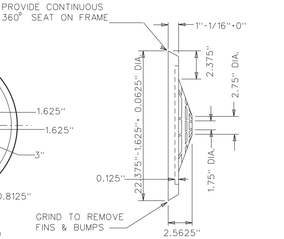

P.L.C. PATTERN NO.2A
A.S.T.M. CLASS 30 GRAY IRON
APPROX. WT. 145 LBS.
STREET TYPE COVER
TO BE USED IN STREETS & DRIVES

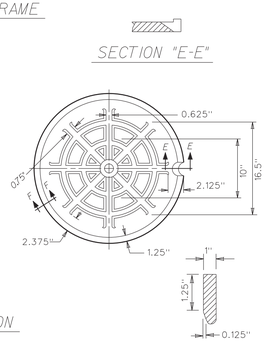

SECTION "E-E"

SECTION "F-F"

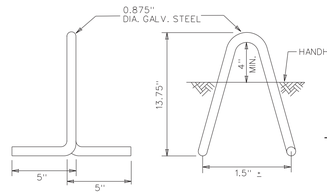

PULLING IRON
N.T.S.

DETAIL "J"

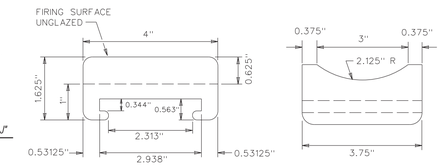

CABLE ARM INSULATORS
WHITE GLAZED PORCELAIN DRY PROCESS
N.T.S.

REV#	DATE	DESCRIPTION	BY

NOT VALID FOR CONSTRUCTION UNLESS SIGNED AND DATED.

WADETRIM
500 Griswold, Suite 2500
Detroit, MI 48226
313.961.3650
FAX 313.961.0966
www.wadetrim.com

Building relationships on a foundation of excellence

CITY OF DETROIT
DEPARTMENT OF PUBLIC WORKS
CITY ENGINEERING DIVISION
DIVISION ST. OVER DEQUINDRE CUT S.N. 12467
HANDHOLE DETAILS

ISSUED FOR: DATE: BY:

JOB NO. DTE 2025-10T

SHEET 30 (470)

DIVISION STREET BRIDGE

© Wade Trim Group, Inc.

PROJECT MANAGER: FIELD BOOK INFORMATION:
z:\tw_work\d0359109\CDT-PLTS-handhole.dgn
PLOTTED 5/21/2013 11:09:56 AM BY mzarzycka

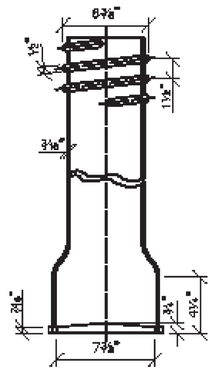

GATE BOX BOTTOM

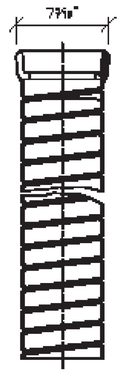

GATE BOX TOP

GATE BOX COVER

GATE BOX BASE

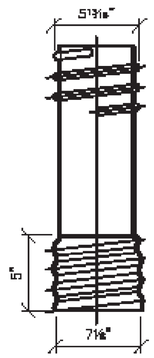

GATE BOX EXTENSION

NOTE

MATERIAL: GRAY CAST IRON PER LATEST REVISION ASTM A74 OR PLASTIC ASTM 02466 OR 02468 . PLUG TO CONTAIN AN APPROVED POLY IRON MAGNETICALLY LOCATABLE MATERIAL

C					
B					
A					
	DESCRIPTION	DRW	CKD	APP	DATE
REVISIONS					

DRAWN BY: S.D.A.
CHECKED BY: S.D.A.
APPROVED:

BOX, 5 1/4 INCH, ROADWAY TELESCOPING

SCALE: NONE

CITY OF DETROIT
WATER AND SEWERAGE DEPARTMENT
ENGINEERING DIVISION
SHEET 1 OF 1
DWG No. 02620-04

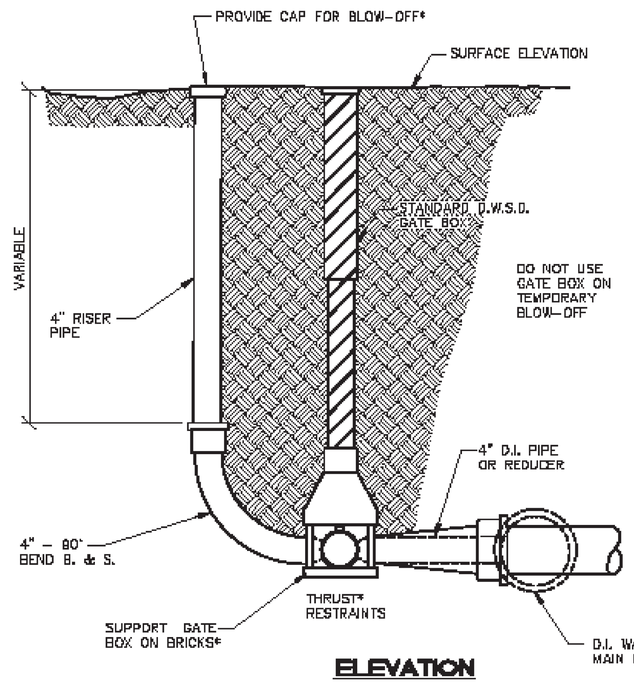

ELEVATION

NOTE

* DESIGNER SHALL DETERMINE SIZE OF STRUCTURES.

C					
B					
A					
	DESCRIPTION	DRW	CKD	APP	DATE
REVISIONS					

DRAWN BY: S.D.A.
CHECKED BY: S.D.A.
APPROVED:

VALVE, BLOW OFF 4 INCH, TEMPORARY

SCALE: NONE

CITY OF DETROIT
WATER AND SEWERAGE DEPARTMENT
ENGINEERING DIVISION
SHEET 1 OF 1
DWG No. 02630-AB

NOTES:

WORK THIS SHEET WITH SHEET 29.

THRUST BLOCKS ARE INCLUDED IN THE PAY ITEM "WATER MAIN, DI, 12 INCH, TR DET G".

THE 4"-90° BEND, 4" RISER PIPE AND BLOW OFF CAP SHALL BE INCLUDED IN THE PAY ITEM "GATE VALVE AND BOX, 4 INCH".

REV#	DATE	DESCRIPTION	BY

NOT VALID FOR CONSTRUCTION UNLESS SIGNED AND DATED:

WADE TRIM
500 Griswold, Suite 2500
Detroit, MI 48226
313.961.3650
FAX 313.961.8666
www.wadetrim.com

Building relationships on a foundation of excellence

CITY OF DETROIT
DEPARTMENT OF PUBLIC WORKS
CITY ENGINEERING DIVISION
DIVISION ST. OVER DEQUINDRE CUT S.N. 12467
DWSD STANDARD DETAILS - 1

ISSUED FOR: DATE: BY:

JOB NO. DTE 2025-10T

SHEET 31 (471)

DIVISION STREET BRIDGE

© Wade Trim Group, Inc.

PROJECT MANAGER: - FIELD BOOK INFORMATION: -
c:\pw_work\d0369109\CEP-PLTS-Standard\DWSDDetails1.dgn
PLOTTED 5/21/2013 11:06:04 AM BY mzarzycka

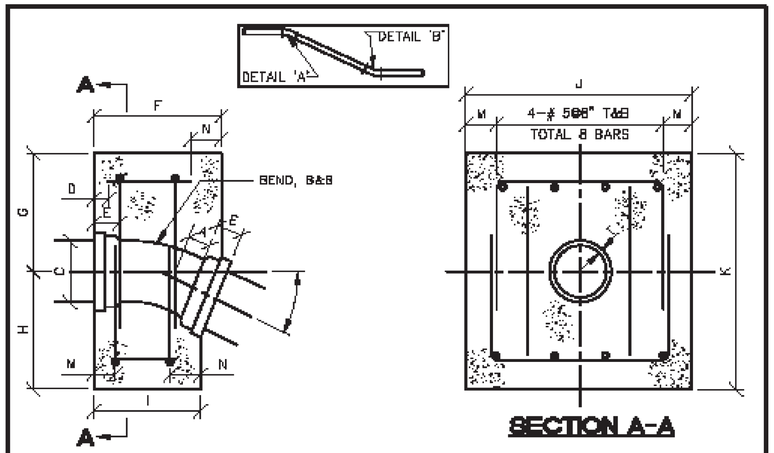

ELEVATION

SECTION A-A

SCHEDULE OF THRUST BLOCK DIMENSIONS												DIMENSIONS - INCHES					
SIZE OF PIPE (IN)	BEND IN DEGREE	F (FT)	G (FT)	H (FT)	I (FT)	J (FT)	K (FT)	L (FT)	M (FT)	N (FT)	↔	A	C	E	R	D	T
6	22½	1.583	1.33	1.67	1.33	2.67	3.00	0.00	0.33	0.25	3@8"	5.0	10.8	4.0	15.08	1.50	0.55
6	45	1.583	1.33	1.67	1.00	2.67	3.00	0.00	0.33	0.25	3@8"	5.0	10.8	4.0	07.25	1.50	0.55
8	22½	1.583	1.33	1.67	1.33	2.67	3.00	0.33	0.33	0.25	4@8"	5.5	13.0	4.0	17.62	1.50	0.60
8	45	1.67	1.50	2.50	1.00	4.00	4.00	0.50	0.50	0.25	4@12"	5.5	13.0	4.0	08.44	1.50	0.80
10	22½	1.83	1.50	2.50	1.42	3.50	4.00	0.50	0.50	0.25	4@10"	6.5	15.3	4.0	22.62	1.50	0.88
10	45	1.92	1.67	2.83	1.00	4.00	4.50	0.67	0.67	0.25	4@12"	6.5	15.3	4.0	10.88	1.50	0.66
12	22½	2.00	1.50	2.50	1.583	4.00	4.00	0.67	0.50	0.33	4@12"	7.5	17.8	4.0	27.62	1.50	0.75
12	45	2.08	1.50	3.00	1.17	5.00	4.50	0.92	0.75	0.25	4@14"	7.5	17.8	4.0	13.25	1.50	0.75
16	22½	2.17	1.67	2.83	1.583	5.00	4.50	0.83	0.75	0.33	4@14"	8.0	22.2	4.0	27.62	1.75	0.89

NOTE

THE DESIGN ENGINEER IS RESPONSIBLE FOR ENSURING THAT THE THRUST BLOCKS ARE CORRECTLY SIZED FOR EACH APPLICATION.

DETAIL "A"

C					
B					
A					
	DESCRIPTION	DRW	CKD	APP	DATE

REVISIONS

DRAWN BY: S.D.A.

CHECKED BY: S.D.A.

APPROVED:

THRUST BLOCK, VERTICAL BEND (TRADITIONAL DWSD SIZING)

SCALE: NONE

CITY OF DETROIT
WATER AND SEWERAGE DEPARTMENT
ENGINEERING DIVISION

SHEET 1 OF 2

DWG No. 03630-28

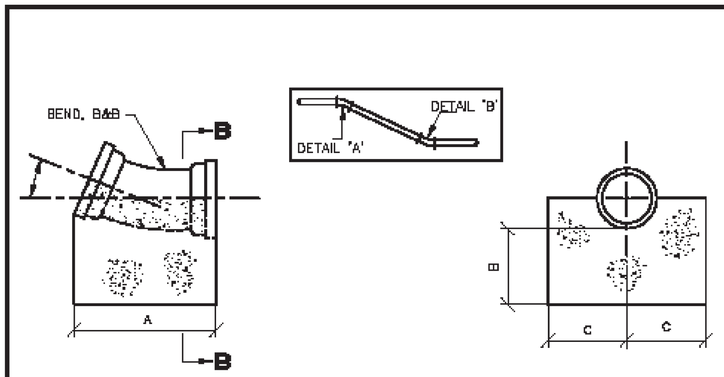

ELEVATION

SECTION B-B

SIZE OF PIPE (IN)	BEND IN DEGREE	A (FT)	B (FT)	C (FT)
6	22½	1.67	1.00	1.00
6	45	1.67	1.00	1.00
8	22½	1.75	1.00	1.00
8	45	1.75	1.00	1.00
10	22½	1.92	1.00	1.00
10	45	1.92	1.00	1.00
12	22½	2.17	1.00	1.00
12	45	2.17	1.00	1.00
16	22½	2.25	1.00	1.25
16	45	2.25	1.00	1.25

NOTE

THE DESIGN ENGINEER IS RESPONSIBLE FOR ENSURING THAT THE THRUST BLOCKS ARE CORRECTLY SIZED FOR EACH APPLICATION.

DETAIL "B"

C					
B					
A					
	DESCRIPTION	DRW	CKD	APP	DATE

REVISIONS

DRAWN BY: S.D.A.

CHECKED BY: S.D.A.

APPROVED:

THRUST BLOCK, VERTICAL BEND (TRADITIONAL DWSD SIZING)

SCALE: NONE

CITY OF DETROIT
WATER AND SEWERAGE DEPARTMENT
ENGINEERING DIVISION

SHEET 2 OF 2

DWG No. 03630-27

NOTES:

WORK THIS SHEET WITH SHEET 29.

THRUST BLOCKS ARE INCLUDED IN THE PAY ITEM "WATER MAIN, DI, 12 INCH, TR DET G".

THE 4"-90° BEND, 4" RISER PIPE AND BLOW OFF CAP SHALL BE INCLUDED IN THE PAY ITEM "GATE VALVE AND BOX, 4 INCH".

REV.#	DATE	DESCRIPTION	BY

NOT VALID FOR CONSTRUCTION UNLESS SIGNED AND DATED:

WADETRIM
500 Griswold, Suite 2300
Detroit, MI 48226
313.961.3650
FAX 313.961.0958
www.wadetrim.com

Building relationships on a foundation of excellence

CITY OF DETROIT
DEPARTMENT OF PUBLIC WORKS
CITY ENGINEERING DIVISION
DIVISION ST. OVER DEQUINDRE CUT S.N. 12467
DWSD STANDARD DETAILS - 2

ISSUED FOR: DATE: BY:

JOB NO. DTE 2025-10T

SHEET 32 (472)

DIVISION STREET BRIDGE

© Wade Trim Group, Inc.

PROJECT MANAGER: -
FIELD BOOK INFORMATION: -
c:\pw_work\d0369109\CEP-PLTS-Standard\DWSDDetails2.dgn
PLOTTED 5/21/2013 11:07:09 AM BY mzarzycko

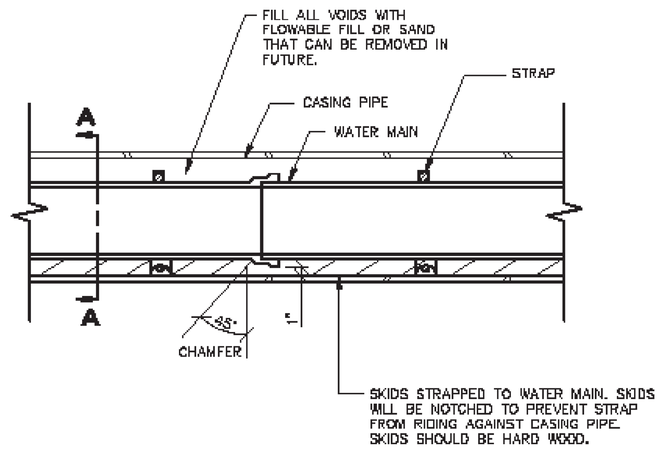

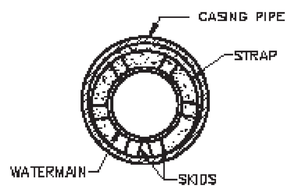

SECTION A-A

NOTES

THE ENDS OF THE CASING SHALL BE SUITABLY PROTECTED AGAINST THE ENTRANCE OF FOREIGN MATERIAL, BUT SHALL NOT BE TIGHTLY SEALED.

C					
B					
A					
	DESCRIPTION	DRW	CKD	APP	DATE

REVISIONS

DRAWN BY: S.D.A.

CHECKED BY: S.D.A.

APPROVED:

CASING PIPE SECTION FOR WATERMAIN

SCALE: NONE

CITY OF DETROIT
WATER AND SEWERAGE DEPARTMENT
ENGINEERING DIVISION

SHEET 1 OF 1

DWG No. 02620-03

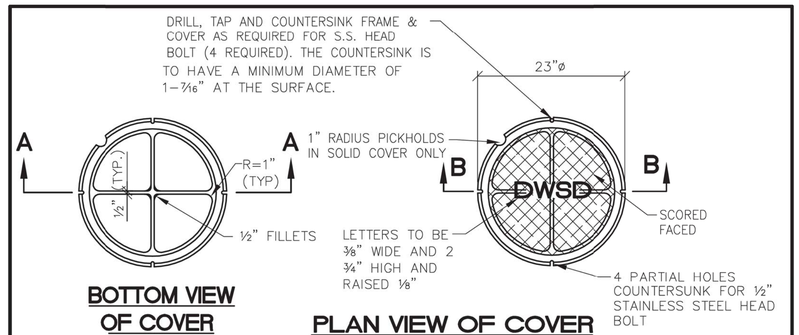

BOTTOM VIEW OF COVER

PLAN VIEW OF COVER

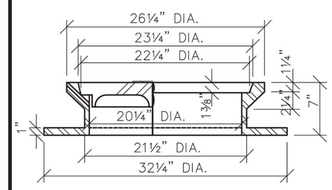

SECTION A-A

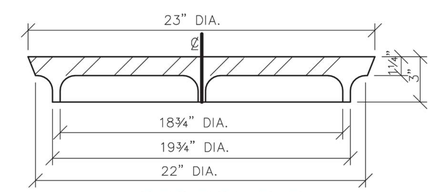

SECTION B-B

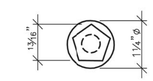

PLAN VIEW OF BOLT

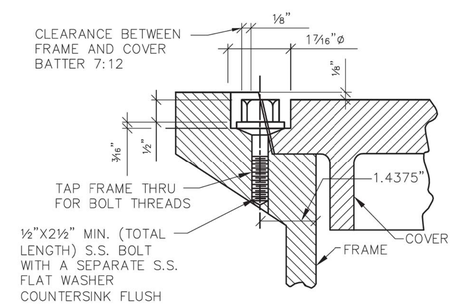

BOLT DETAIL

NOTES

1. FRAME & COVER TO BE GRAY IRON CASTING , ASTM A48, CLASS 30B
   TOTAL WT. = 409# (PERF. COVER)
   MANHOLE FRAME = 262#
   COVER (PERF) = 147#
   COVER (BLANK) = 157#
   THE SEATING FACE OF THE COVER & SEAT FOR SAME ON THE FRAME SHALL BE MACHINE FINISHED OR THE EQUIVALENT THEREOF SO THAT THE COVER SHALL HAVE AN EVEN BEARING ON ITS SEAT AT ALL POINTS WITHOUT ROCKING OR TILTING.
2. FOR ½" BOLT: NO. 13 NATIONAL STD COURSE THD.

C					
B					
A					
	DESCRIPTION	DRW	CKD	APP	DATE

REVISIONS

DRAWN BY: S.D.A.

CHECKED BY: S.D.A.

APPROVED:

MANHOLE, COVER WITH FRAME

SCALE: NONE

CITY OF DETROIT
WATER AND SEWERAGE DEPARTMENT
ENGINEERING DIVISION

SHEET 1 OF 1

DWG No. 02600-07

NOTES:

WORK THIS SHEET WITH SHEET 29.

THRUST BLOCKS ARE INCLUDED IN THE PAY ITEM "WATER MAIN, DI, 12 INCH, TR DET G".

THE 4"-90° BEND, 4" RISER PIPE AND BLOW OFF CAP SHALL BE INCLUDED IN THE PAY ITEM "GATE VALVE AND BOX, 4 INCH".

REV#	DATE	DESCRIPTION	BY

NOT VALID FOR CONSTRUCTION UNLESS SIGNED AND DATED.

WADETRIM
500 Griswold, Suite 2500
Detroit, MI 48226
313.961.3650
FAX 313.961.3660
www.wadetrim.com

Building relationships on a foundation of excellence

CITY OF DETROIT
DEPARTMENT OF PUBLIC WORKS
CITY ENGINEERING DIVISION
DIVISION ST. OVER DEQUINDRE CUT S.N. 12467
DWSD STANDARD DETAILS - 3

ISSUED FOR: DATE: BY:

JOB NO. DTE 2025-10T

SHEET 33 (473)

DIVISION STREET BRIDGE

© Wade Trim Group, Inc.

PROJECT MANAGER: - FIELD BOOK INFORMATION: -
c:\pw_work\d0369109\CEP-PLTS-Standard\DWSDDetails3.dgn
PLOTTED 5/21/2013 11:08:18 AM BY mzarzycka

	BAR	DIMENSIONS a	b	c	d	e	f	g	h	j	k	m	p	NO. REQ'D	TOTAL WT.
FOOTING	EA081409	14'-9"												16	630
	EA081600	16'-0"												08	342
	EA082107	21'-7"												08	461
	EA082400	24'-0"												32	2051
	EA082610	26'-10"												24	1719
	EA082806	28'-6"												48	3653
	EA083903	39'-3"												128	13414
	EB080800	4'-0"	4'-0"											08	171
	EB081009	8'-3"	2'-6"											20	574
	EB090902	7'-5"	1'-9"											680	21193
	EB091002	7'-5"	2'-9"											220	7605
	ED040606	1'-9"	2'-6"	1'-9"										90	391
	ED070906	1'-9"	6'-0"	1'-9"										436	8466
	ED090706	2'-9"	4'-0"	1'-9"										82	2091
	EK040708	1'-7 1/4"	1'-5 1/4"	1'-5"	1'-7 1/4"									216	1106
	EK041010	2'-6"	1'-10"	1'-10"	2'-0"									216	1563
														TOTAL = 65430	

	BAR	DIMENSIONS a	b	c	d	e	f	g	h	j	k	m	p	NO. REQ'D	TOTAL WT.
	EA081209	12'-9"												24	817
	EA081400	14'-0"												12	449
SILL WALL	EA081907	19'-7"												12	627
	EA082610	26'-10"												40	2866
	EA082706	27'-6"												52	3818
	ED091100	4'-6"	2'-0"	4'-6"										340	12716
	ED091206	4'-6"	3'-6"	4'-6"										110	4675
	EC040300	0'-0"	2'-6"	0'-4 1/4"	0'-4 1/4"	0'-6"	0"	0"						4	8
	EU060409	2'-0"	1'-6"	1'-9"	1'-6"	1'-0"								6	43
														TOTAL = 26019	

	BAR	DIMENSIONS a	b	c	d	e	f	g	h	j	k	m	p	NO. REQ'D	TOTAL WT.
BRIDGE RAILING	EA040203	2'-3"	6" THREADED ONE END											384	577
	EA043308	33'-8"												24	540
	EA060311	3'-11"	6" THREADED ONE END											24	141
	ED040309	1'-2"	1'-6"	1'-2"										24	60
														TOTAL = 1318	

	BAR	DIMENSIONS a	b	c	d	e	f	g	h	j	k	m	p	NO. REQ'D	TOTAL WT.
AESTHETIC CONCRETE RAILING, SPECIAL	EA040311	3'-11"	6" THREADED ONE END											182	476
	EA040708	7'-8"												6	31
	EA041100	11'-0"												6	44
	EA041406	14'-6"												6	58
	EA042503	25'-3"												6	101
														TOTAL = 710	

BILL OF MATERIALS: ROAD ITEMS (PART 1)

ITEM NUMBER	ITEM DESCRIPTION	TOTAL PLAN QUANTITY	ITEM UNIT
1027051	AUDIO-VISUAL FILMING (SN 12467)	1	LS
2040050	PAVT, REM	345	SYD
2040055	SIDEWALK, REM	180	SYD
2050010	EMBANKMENT, CIP	266	CYD
2050016	EXCAVATION, EARTH	439	CYD
2050030	MACHINE GRADING	2	STA
3010002	SUBBASE, CIP	30	CYD
3020010	AGGREGATE BASE, 4 INCH	230	SYD
4011136	STEEL CASING PIPE, 24 INCH, TR DET G	98	FT
4030010	DR STRUCTURE COVER, TYPE B	1	EA
4030306	DR STRUCTURE, TAP, 6 INCH	3	EA
4040033	UNDERDRAIN, FDN, 6 INCH	210	FT
4040093	UNDERDRAIN OUTLET, 6 INCH	85	FT
5010005	HMA SURFACE, REM	345	SYD
6020166	CONC PAVT WITH INTEGRAL CURB, NONREINF, 9 INCH	230	SYD
6020203	JOINT, CONTRACTION, CP	470	FT
7067021	FLOWABLE FILL, NON-STRUCTURAL	4	CYD
8030044	SIDEWALK, CONC, 4 INCH	2415	SFT
8100340	POST HOLE THROUGH CONC FOR STEEL POST	2	EA
8100371	POST, STEEL, 3LB	28	FT
8100403	SIGN, TYPE III, REM	22	EA
8100405	SIGN, TYPE IIIB	13	SFT
8120022	BARRICADE, TYPE III, HIGH INTENSITY, LIGHTED, FURN	12	EA
8120023	BARRICADE, TYPE III, HIGH INTENSITY, LIGHTED, OPER	12	EA
8120170	MINOR TRAF DEVICES (SN 12467)	1	LS
8120350	SIGN, TYPE B, TEMP, PRISMATIC, FURN	476	SFT
8120351	SIGN, TYPE B, TEMP, PRISMATIC, OPER	428	SFT
8120352	SIGN, TYPE B, TEMP, PRISMATIC, SPECIAL, FURN	224	SFT
8120353	SIGN, TYPE B, TEMP, PRISMATIC, SPECIAL, OPER	204	SFT
8160100	SLOPE RESTORATION, TYPE A	13	SYD
8190016	CABLE, REM	95	FT
8190146	CONDUIT, SCHEDULE 40, 1 1/2 INCH	115	FT
8190152	CONDUIT, SCHEDULE 40, 5 INCH	95	FT
8190207	DB CABLE, IN CONDUIT, 600V, 1/C#4	750	FT
8190244	HH, ADJ	2	EA
8190254	HH, REM	2	EA
8190262	HH, TYPE D	4	EA
8197050	FIXTURE TYPE E1	4	EA
8230050	GATE VALVE AND BOX, 4 INCH	1	EA
8230166	WATER MAIN, DI, 12 INCH, TR DET G	167	FT
8230360	GATE WELL, 60 INCH DIA	1	EA
8230431	GATE BOX, ADJ, CASE 1	2	EA
8237001	WATER MAIN, REM	40	FT

BILL OF MATERIALS: BRIDGE ITEMS (PART 2)

ITEM NUMBER	ITEM DESCRIPTION	TOTAL PLAN QUANTITY	ITEM UNIT
2040001	ASBESTOS MATERIALS, REMOVAL AND DISPOSAL	5000	DLR
2047050	PILE, TIMBER, REM	20	EA
2047051	RELOCATION AND SITE CLEANUP	1	LS
2047051	STRUCTURES, REM PORTIONS, MODIFIED (SN 12467)	1	LS
2050031	NON-HAZARDOUS CONTAMINATED MATERIAL HANDLING AND DISPOSAL, LM	160	CYD
2060010	EXCAVATION, FDN	1144	CYD
2060002	BACKFILL, STRUCTURE, CIP	1186	CYD
2080020	EROSION CONTROL, INLET PROTECTION, FABRIC DROP	3	EA
2080036	EROSION CONTROL, SILT FENCE	550	FT
2090001	PROJECT CLEANUP (SN 12467)	1	LS
4067001	CULV, PRECAST THREE-SIDED OR ARCH, MODIFIED 32 FOOT BY 11 FOOT	100	FT
7040003	STEEL SHEET PILING, TEMP, LEFT IN PLACE	750	SFT
7050001	PREBORE, FDN PILING	1020	FT
7050002	PILE DRIVING EQUIPMENT, FURN (SN 12467)	1	LS
7050030	PILE, STEEL, FURN AND DRIVEN, 12 INCH	7813	FT
7050031	TEST PILE, STEEL, 12 INCH	3	EA
7050039	PILE POINT, STEEL	60	EA
7050050	PILE, STEEL, SPLICE	196	EA
7057050	TEST PILE, DYNAMIC ANALYSIS	3	EA
7057050	TEST PILE, FURN DYNAMIC ANALYSIS EQUIP	3	EA
7057051	MONITORING VIBRATIONS (SN 12467)	1	LS
7060012	CONC, GRADE S2, SUBFOOTING	26	CYD
7060020	CONC, LOW TEMPERATURE PROTECTION	416	CYD
7060092	REINFORCEMENT, STEEL, EPOXY COATED	93477	LB
7060100	SUBSTRUCTURE CONC	393	CYD
7067011	TEXTURING CONC	115	SYD
7067021	FLOWABLE FILL	67	CYD
7087010	WINGWALL, PRECAST	840	SFT
7100001	JOINT WATERPROOFING	1080	SFT
7100011	CONC SURFACE COATING	575	SYD
7117001	AESTHETIC CONCRETE RAIL, SPECIAL	60	FT
7117001	BRIDGE RAILING, AESTHETIC PARAPET TUBE, DETAIL 2, MODIFIED	137	FT
8087010	PEDESTRIAN FENCE, SPECIAL	822	SFT
8197050	PROTECTION, FIBER OPTIC LINE	16	EA
8197050	PROTECTIVE SLEEVE, FIBER OPTIC LINE, BRIDGE	16	EA
8197050	COORDINATION, FIBER OPTIC LINE (SN 12467)	1	LS

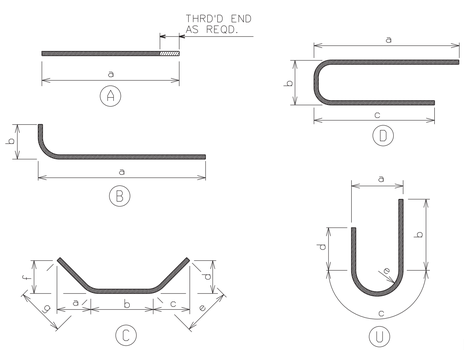

REINFORCEMENT SHALL BE BUNDLED AND TAGGED AS TO THE LOCATION AS SHOWN ON THIS SHEET.

EPOXY COATED
BAR SIZE
BAR LENGTH (FT)
BAR LENGTH (IN)
EA064700
BAR SHAPE
BAR LEGEND

MISCELLANEOUS QUANTITIES		
93,477	LB	REINFORCEMENT, STEEL, EPOXY COATED

REV.#	DATE	DESCRIPTION	BY

NOT VALID FOR CONSTRUCTION UNLESS SIGNED AND DATED.

WADE TRIM
500 Griswold, Suite 2500
Detroit, MI 48226
313.961.3650
FAX 313.961.0966
www.wadetrim.com

Building relationships on a foundation of excellence

CITY OF DETROIT
DEPARTMENT OF PUBLIC WORKS
CITY ENGINEERING DIVISION
DIVISION ST. OVER DEQUINDRE CUT S.N. 12467
BILL OF MATERIALS/STEEL REINFORCEMENT

ISSUED FOR: DATE: BY:

JOB NO. DTE 2025-10T

SHEET 34 (474)

DIVISION STREET BRIDGE

© Wade Trim Group, Inc.

PROJECT MANAGER: - FIELD BOOK INFORMATION: -
c:\pw_work\d0369109\CFP-PLTS-Schedules.dgn
PLOTTED 5/21/2013 11:11:20 AM BY mzarzycka

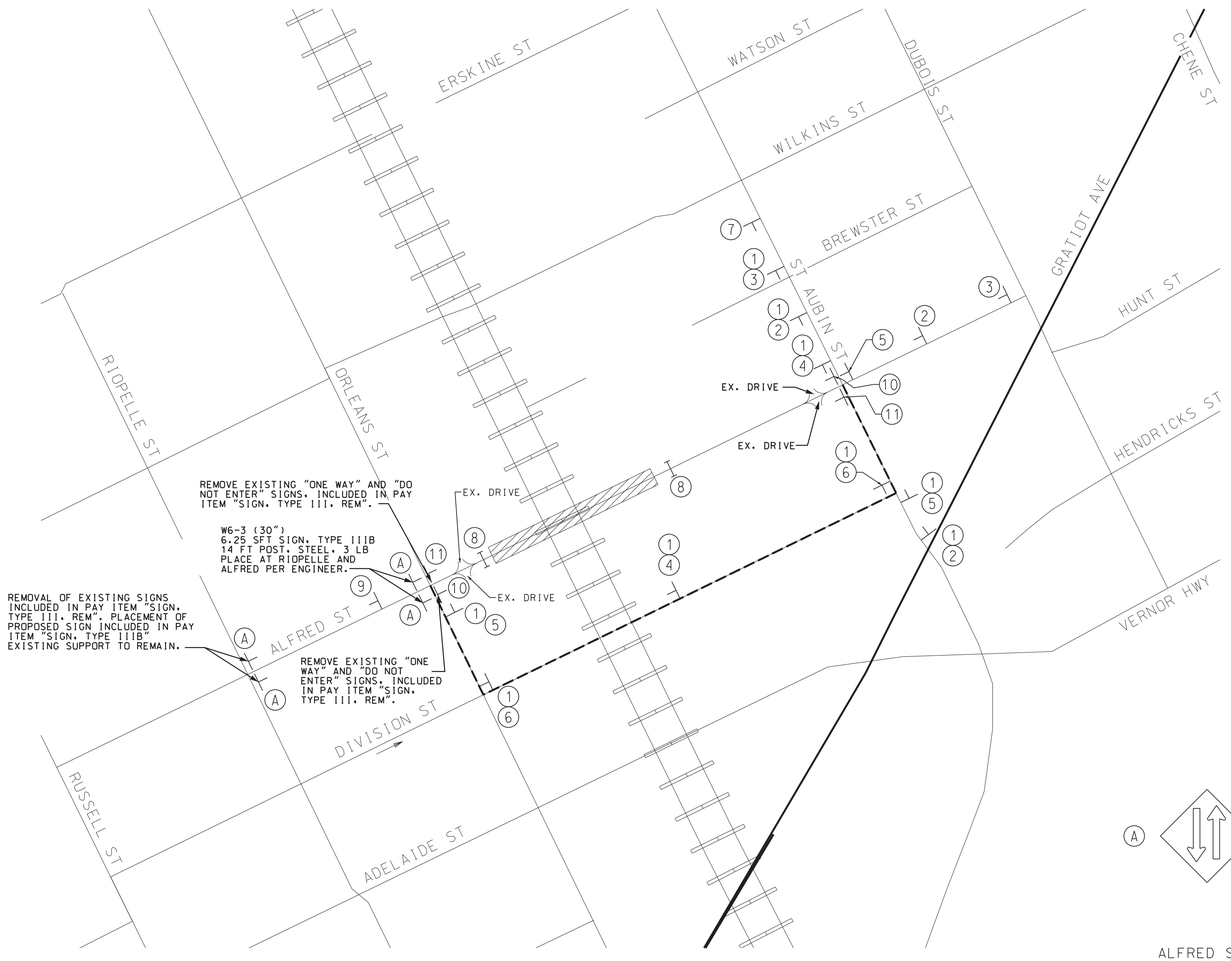

LOCATION PLAN

DETOUR SIGNS

1	W ALFRED ST	SPECIAL SIGN #1	7	ALFRED ST CLOSED ORLEANS ST TO ST AUBIN	SPECIAL SIGN #2
2	DETOUR AHEAD	W20-2	8	ROAD CLOSED (3-TYPE III BARRICADES)	R11-2
3	ROAD CLOSED AHEAD	W20-3	9	END DETOUR	M4-8a
4	DETOUR ⇧	M4-9a	10	SIDEWALK CLOSED AHEAD ⇦ CROSS HERE (1-TYPE III BARRICADE)	R9-11(L)
5	DETOUR ⇦	M4-9(L)	11	SIDEWALK CLOSED AHEAD ⇨ CROSS HERE (1-TYPE III BARRICADE)	R9-11(R)
6	DETOUR ⇨	M4-9(R)			

WORK ZONE BEGINS — R5-18c

END ROAD WORK — G20-2

MISCELLANEOUS QUANTITIES

50	SFT	SIGN. TYPE IIIB
5	SFT	SIGN. TYPE IIIA
84	FT	POST. STEEL. 3LB
6	EA	POST HOLE THROUGH CONC FOR STEEL POST
11	EA	SIGN. TYPE III. REM

PERMANENT SIGNING

- FOR LOCATIONS AND DETAILS OF SIGNS B-D SEE SHEET 3.

A — W6-3

B — NO OUTLET — W14-2

C — ROAD ENDS — W14-2b

D — OM4-3

ALFRED STREET DETOUR SIGNING QUANTITIES

SIGN			SIZE(in X in)		AREA	TOTAL	TOTAL
DESCRIPTION	CODE	TYPE	IN	IN	SQ FT	QTY	AREA
W ALFRED ST	SPECIAL SIGN #1	B	48	12	4.0	9	36
DETOUR AHEAD	W20-2	B	48	48	16.0	3	48
ROAD CLOSED AHEAD	W20-3	B	48	48	16.0	2	32
DETOUR (STRAIGHT)	M4-9a	B	30	24	5.0	2	10
DETOUR (LEFT)	M4-9(L)	B	30	24	5.0	3	15
DETOUR (RIGHT)	M4-9(R)	B	30	24	5.0	2	10
ALFRED ST CLOSED ORLEANS ST TO ST AUBIN	SPECIAL SIGN #2	B	48	42	14.0	1	14
ROAD CLOSED	R11-2	B	48	30	10.0	2	20
END DETOUR	M4-8a	B	30	24	5.0	1	5
SIDEWALK CLOSED AHEAD CROSS HERE (LEFT)	R9-11(L)	B	24	12	2.0	2	4
SIDEWALK CLOSED AHEAD CROSS HERE (RIGHT)	R9-11(R)	B	24	12	2.0	2	4
WORK ZONE BEGINS	R5-18c	B	48	48	16.0	2	32
END ROAD WORK	G20-2	B	36	16	4.0	2	8
SIGN. TYPE B. TEMP. PRISMATIC. FURN						19	207
SIGN. TYPE B. TEMP. PRISMATIC. OPER							188
SIGN. TYPE B. TEMP. PRISMATIC. SPECIAL. FURN						10	55
SIGN. TYPE B. TEMP. PRISMATIC. SPECIAL. OPER							50

		QTY
MINOR TRAF DEVICES	LS	1
BARRICADE. TYPE III. HIGH INTENSITY. FURN	EA	10
BARRICADE. TYPE III. HIGH INTENSITY. OPER	EA	10

MAINTAINING TRAFFIC NOTES

1. ALL TEMPORARY CONSTRUCTION TRAFFIC APPURTENANCES. SUCH AS BARRICADES NECESSARY FOR CONSTRUCTION SHALL CONFORM TO THE 2011 MICHIGAN MANUAL OF UNIFORM TRAFFIC CONTROL DEVICES.
2. ALL CONSTRUCTION APPURTENANCES SHALL BE IN PLACE PRIOR TO THE START OF CONSTRUCTION ACTIVITIES. EXISTING SIGNS IN CONFLICT WITH THE TEMPORARY CONSTRUCTION TRAFFIC SIGNS SHALL BE COVERED OR TEMPORARILY RESET OR REMOVED AND STOCKPILED DURING CONSTRUCTION.
3. THE CONTRACTOR SHALL NOTIFY THE CITY OF DETROIT POLICE AND FIRE DEPARTMENTS IN WRITING A MINIMUM OF TEN WORKING DAYS PRIOR TO THE START OF CONSTRUCTION ON ANY ROAD CLOSURES.
4. LOCAL STREETS ADJACENT TO THE CONSTRUCTION AREA SHALL NOT BE USED BY THE CONTRACTOR FOR EQUIPMENT AND MATERIAL STORAGE.
5. THE CONTRACTOR SHALL SUBMIT A PLAN FOR TRUCK OR HAUL ROUTES TO BE USED DURING CONSTRUCTION TO THE ENGINEER FOR APPROVAL.
6. THE CONTRACTOR SHALL NOTIFY ADJACENT BUSINESSES IN WRITING A MINIMUM OF TEN WORKING DAYS PRIOR TO PAVEMENT REMOVAL OR ANY PLANNED CONSTRUCTION THAT MAY LIMIT OR TEMPORARILY ELIMINATE ACCESS TO THEIR PROPERTY.
7. ALL CONSTRUCTION ACTIVITIES SHALL TAKE PLACE BETWEEN THE HOURS OF 7:00 A.M. AND 7:00 P.M. MONDAY THROUGH SATURDAY. NO CONSTRUCTION ACTIVITIES. INCLUDING PAVEMENT SAW CUTTING WILL BE ALLOWED ON SUNDAYS. AND MONDAY THROUGH SATURDAY BETWEEN THE HOURS OF 7:00 P.M. AND 7:00 A.M. THE CONTRACTOR MAY REQUEST AN EXTENSION OF WORK HOURS. ANY EXTENSION OF WORK HOURS IS AT THE DISCRETION OF THE CITY OF DETROIT. CITY ENGINEERS OFFICE.

D3-1:
1.6" Radius, 0.4" Border, 0.6" Indent, Black on Orange;
[W ALFRED ST] C;

SPECIAL SIGN #1 DETAIL

W-VAR:
1.6" Radius, 0.9" Border, 0.6" Indent, Black on Orange;
[ALFRED ST] C;
[CLOSED] C;
[ORLEANS ST] C;
[TO ST AUBIN] C;

SPECIAL SIGN #2 DETAIL

LEGEND

- DETOUR ROUTE
- SIGN CLUSTER NUMBER
- TYPE III BARRICADE
- WORK ZONE
- ONE-WAY STREET (FLOW OF TRAFFIC)

REV#	DATE	DESCRIPTION	BY

NOT VALID FOR CONSTRUCTION UNLESS SIGNED AND DATED.

WADE TRIM
500 Griswold, Suite 2500
Detroit, MI 48226
313.961.3650
FAX 313.961.8998
www.wadetrim.com

Building relationships on a foundation of excellence

CITY OF DETROIT
DEPARTMENT OF PUBLIC WORKS
CITY ENGINEERING DIVISION
ALFRED ST OVER DEQUINDRE CUT S.N. 124447
DETOUR & PERMANENT SIGNING PLAN

ISSUED FOR: DATE: BY:

JOB NO. DTE 2025-11T

SHEET 2 (475)

ALFRED STREET BRIDGE

© Wade Trim Group, Inc.

PROJECT MANAGER: -
c:\bw_work\d0359079\CRP_PLTS-Alfred0detour.dgn
FIELD BOOK INFORMATION: -
PLOTTED 5/21/2013 11:35:41 AM BY mszarzycka

BENCHMARKS

BM•3: ARROW ON HYDRANT NORTH SIDE ALFRED, 1ST HYDRANT WEST OF ST. AUBIN STREET

EL. 148.68

EXISTING STRUCTURE

EXISTING BRIDGE IS A 3-SPAN, CONCRETE ENCASED STEEL BEAM WITH CONCRETE DECK, CINDER FILL AND CONCRETE SURFACE AND HMA OVERLAY. THERE ARE CONCRETE PIERS AND ABUTMENTS ON SPREAD FOOTINGS. THE ORIGINAL BRIDGE WAS CONSTRUCTED APPROXIMATELY 1930.

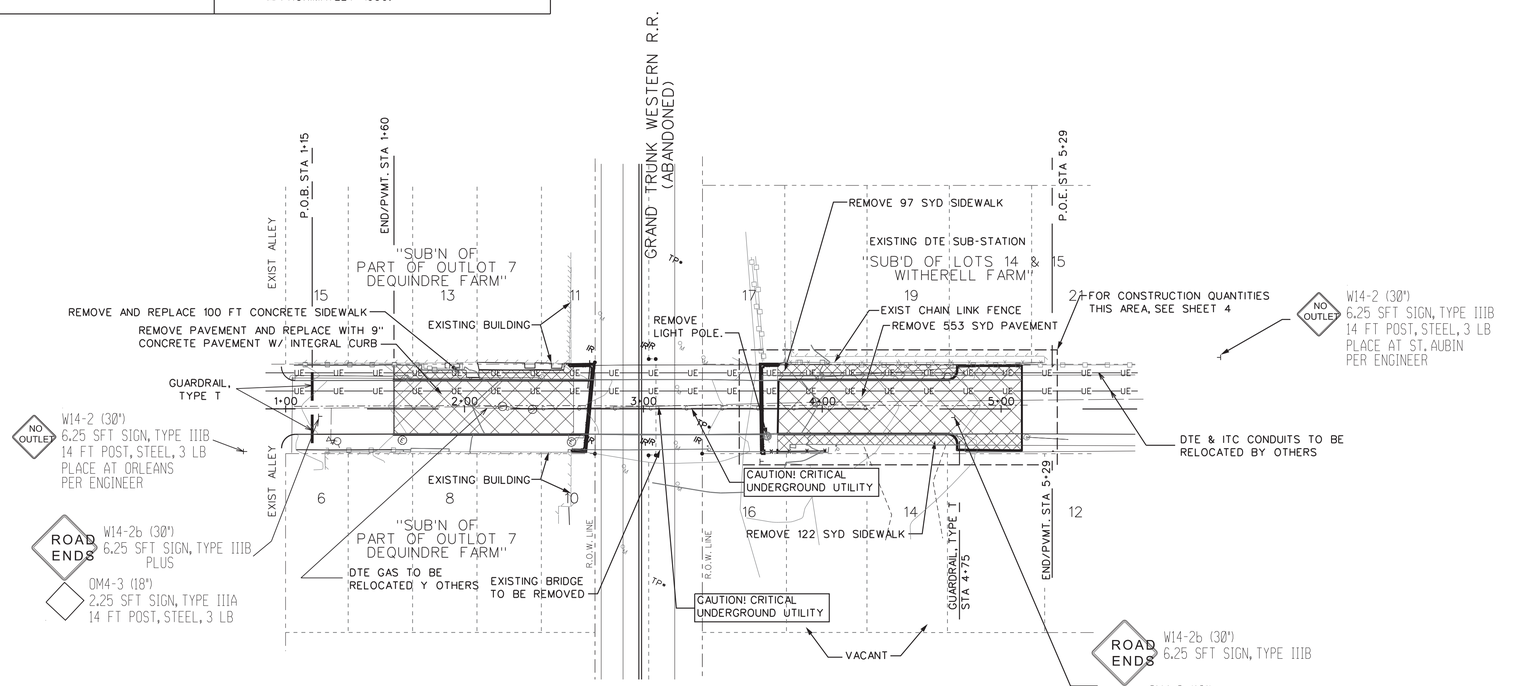

SITE PLAN

SCALE: 1"=40'

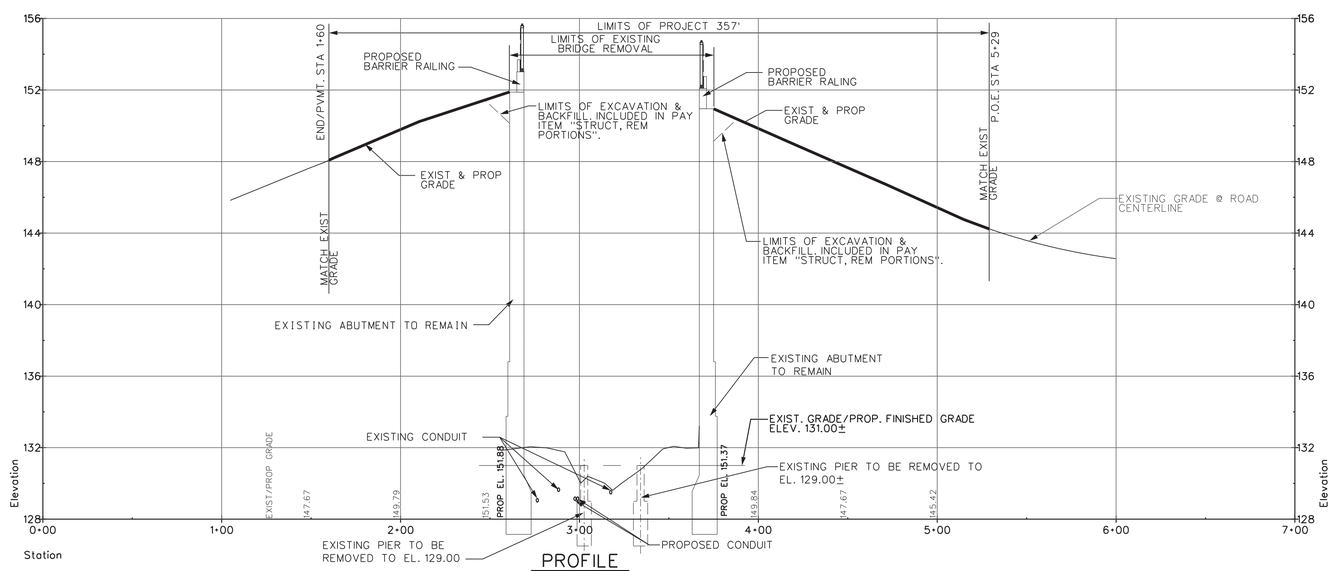

PROFILE

SCALE: VERT 1"=4'
HORZ 1"=40'

ALL CHAIN LINK FENCE & PEDESTRIAN FENCE, SPECIAL SHALL BE PAINTED BLACK. TUBE RAIL & POSTS @ BRIDGE RAILING, AESTHETIC PARAPET TUBE, DETAIL 2, MODIFIED SHALL ALSO BE PAINTED BLACK. SEE SPECIAL PROVISIONS.

NOTES

THE WORK COVERED BY THESE PLANS INCLUDES REMOVAL OF EXISTING SUPERSTRUCTURE, PIERS AND PORTIONS OF THE ABUTMENTS AS WELL AS MAINTAINING TRAFFIC, SITE RESTORATION AND APPROACHES TO THE LIMITS SHOWN.

THE CONTRACTOR SHALL LOCATE ALL ACTIVE UNDERGROUND UTILITIES PRIOR TO STARTING WORK AND SHALL CONDUCT HIS OPERATIONS IN SUCH A MANNER AS TO ENSURE THAT THOSE UTILITIES NOT REQUIRING RELOCATION WILL NOT BE DISTURBED.

ALFRED TRAFFIC IS TO BE DETOURED OVER OTHER EXISTING ROADS AND CLOSED AFTER BRIDGE REMOVAL.

PLAN ELEVATIONS REFER TO CITY OF DETROIT DATUM.

CONTRACTOR SHALL REFER TO SPECIAL RPOVISIONS ON WORKING NEAR DWSD FACILITIES.

SEE SPECIAL PROVISION ON FIBER OPTIC COORDINATION & PROTECTION.

CONDUITS IN EXISTING BRIDGE MAY BE ASBESTOS. CONTRACTOR SHALL CONFIRM.

DTE CONDUITS & GAS AND ITC PRIMARY IN BRIDGE DECK TO BE RELOCATED BY OTHERS. CONTRACTOR SHALL COORDINATE HIS WORK WITH THEIR ACTIVITIES.

MISCELLANEOUS QUANTITIES

5000	DLR	ASBESTOS MATERIALS, REMOVAL AND DISPOSAL
1	LS	PROJECT CLEANUP (SN 12447)
1	LS	STRUCTURES, REM PORTIONS, MODIFIED (SN 12447)
894	SYD	PAVT, REM
282	SYD	SIDEWALK, REM
567	SFT	SIDEWALK, CONC, 4 INCH
341	SYD	CONC PAVT WITH INTEGRAL CURB, NONREINF, 9 INCH
30	CYD	SUBBASE, CIP
155	SYD	CONCRETE SURFACE COATING
40	FT	FENCE, CHAIN LINK, 96 INCH
23	CYD	CONC GRADE D
80	CFT	HAND CHIPPING, OTHER THAN DECK
80	SFT	PATCH, FORMING
9	CYD	PATCHING CONC, M
40	FT	GUARDRAIL, TYPE T
4	EA	TERMINAL END SHOE, TYPE T
805	SYD	AGGREGATE BASE, 4 INCH
1	EA	UTILITY POLE, REMOVE
32	CYD	CONC, LOW TEMPERATURE PROTECTION
4	STA	MACHINE GRADING
1	LS	RELOCATION AND SITE CLEANUP (SN 12447)
4	EA	PROTECTION, FIBER OPTIC LINE, BRIDGE
1	LS	COORDINATION, FIBER OPTIC LINE (SN 12447)

REV#	DATE	DESCRIPTION	BY

NOT VALID FOR CONSTRUCTION UNLESS SIGNED AND DATED.

WADE TRIM
500 Griswold, Suite 2500
Detroit, MI 48226
313.961.3650
FAX 313.961.0966
www.wadetrim.com

Building relationships on a foundation of excellence

CITY OF DETROIT
DEPARTMENT OF PUBLIC WORKS
CITY ENGINEERING DIVISION
ALFRED ST OVER DEQUINDRE CUT S.N. 12447
PLAN OF SITE

ISSUED FOR: DATE: BY:

JOB NO. DTE 2025-11T

SHEET 3 (476)

ALFRED STREET BRIDGE

© Wade Trim Group, Inc.

PROJECT MANAGER: - FIELD BOOK INFORMATION: -
c:\pw_work\tbreen\d0369079\CSP-PLTS-Plan of Site.dgn
PLOTTED 5/23/2013 4:10:46 PM BY rbreen

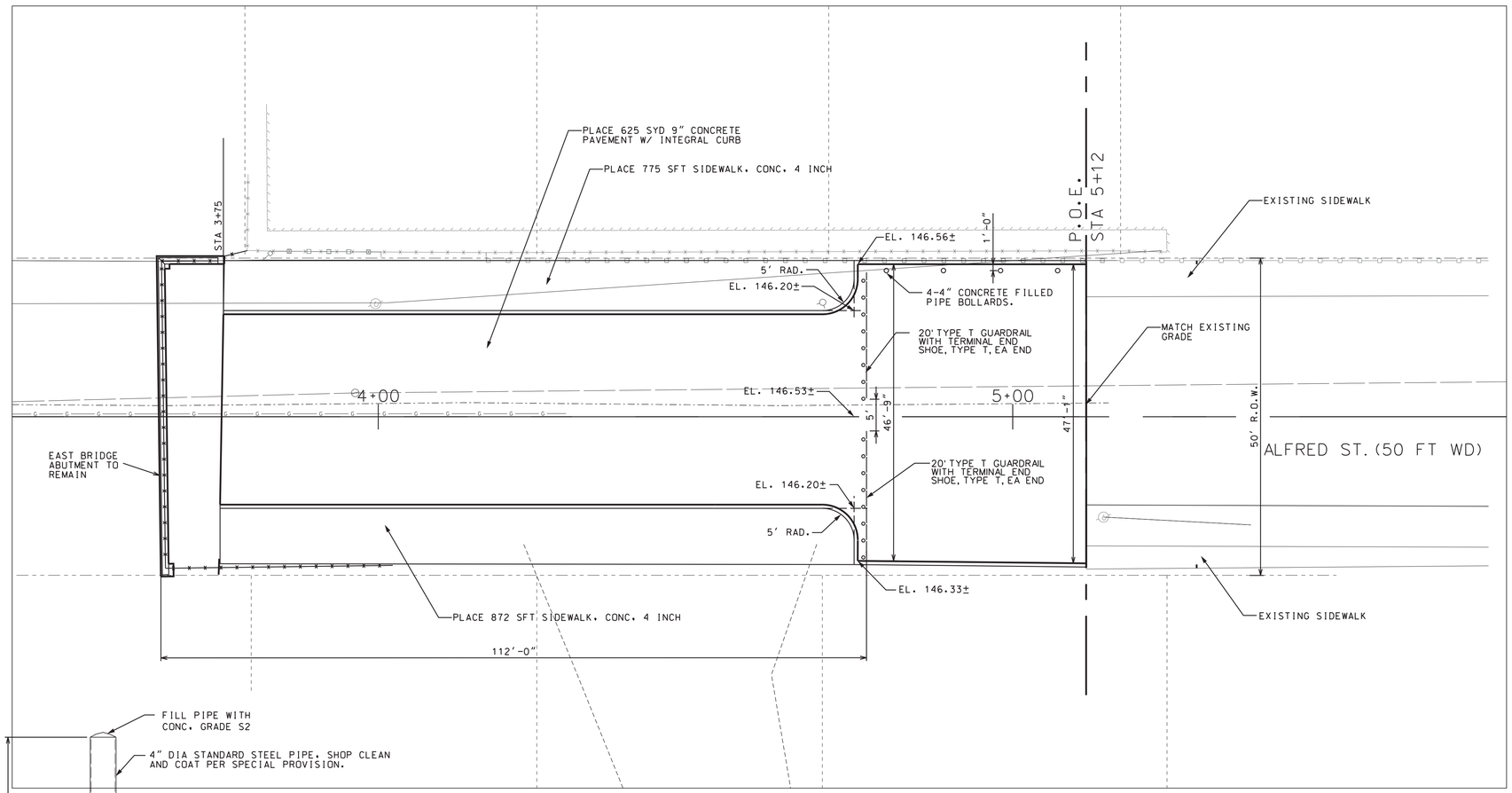

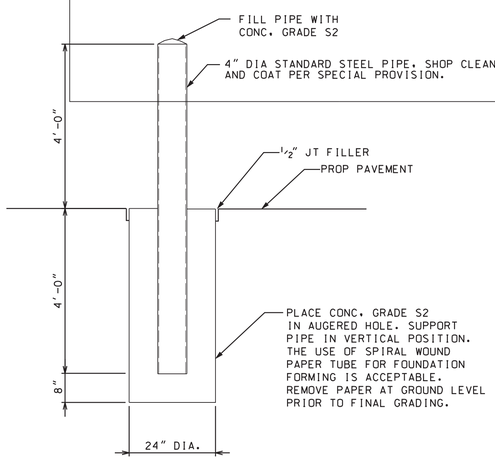

STEEL PIPE BOLLARD DETAIL

PIPE INSTALLATION AND CONCRETE WILL NOT BE PAID FOR SEPARATELY BUT SHALL BE INCLUDED IN THE PAY ITEM Bollard, Steel Pipe.

CONSTRUCTION QUANTITIES

1647	SFT	SIDEWALK, CONC 4 INCH
464	SYD	CONCRETE PAVEMENT WITH INTEGRAL CURB, NONREINF, 9 INCH
40	FT	GUARDRAIL, TYPE T
4	EA	TERMINAL END SHOE, TYPE T
4	EA	CONC POST
4	EA	STEEL PIPE BOLLARD

REV#	DATE	DESCRIPTION	BY

NOT VALID FOR CONSTRUCTION UNLESS SIGNED AND DATED.

WADE TRIM
500 Griswold, Suite 2500
Detroit, MI 48226
313.961.3650
FAX 313.961.0966
www.wadetrim.com

Building relationships on a foundation of excellence

CITY OF DETROIT
DEPARTMENT OF PUBLIC WORKS
CITY ENGINEERING DIVISION
ALFRED ST OVER DEQUINDRE CUT S.N. 124447
GENERAL PLAN OF SITE DETAILS

ISSUED FOR: DATE: BY:

JOB NO. DTE 2025-11T

SHEET 4 (477)

ALFRED STREET BRIDGE

© Wade Trim Group, Inc.

PROJECT MANAGER: -
FIELD BOOK INFORMATION: -
c:\pw_work\d0369079\CSP-PLTS-PlanOfSiteDetail.dgn
PLOTTED 5/21/2013 11:38:39 AM BY mzarzycka

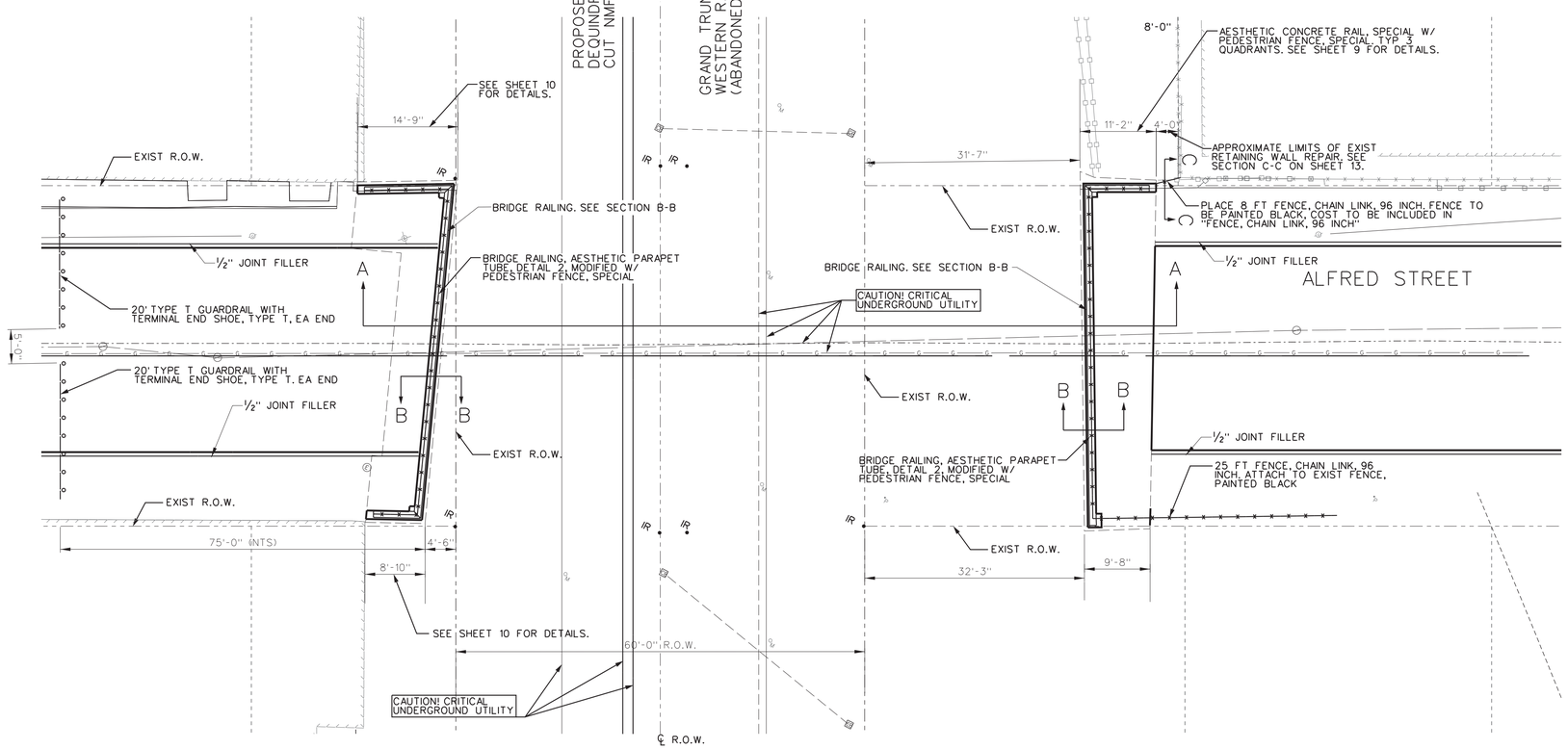

PLAN

10 5 0 5 10 15 20
SCALE IN FEET

NOTES:

CONCRETE SURFACE COATING SHALL BE APPLIED TO EXPOSED FACES OF ABUTMENTS AND BRIDGE RAILING. SEE DETAIL SHEETS FOR LIMITS OF COVERAGE.

EXISTING BRIDGE NAMEPLATES ARE TO BE SALVAGED ON SITE AND SHALL BE GIVEN TO THE ENGINEER AND BECOME THE PROPERTY OF THE CITY OF DETROIT.

SEE REMOVAL SHEETS FOR LIMIT OF EXISTING STRUCTURE.

REMOVAL OF BRIDGE SUPERSTRUCTURE AND PORTIONS OF ABUTMENTS SHALL BE PAID FOR AS "STRUCTURE, REM PORTION, MODIFIED".

FOR QUANTITIES THIS SHEET, SEE QUANTITY SCHEDULE, SHEET 3.

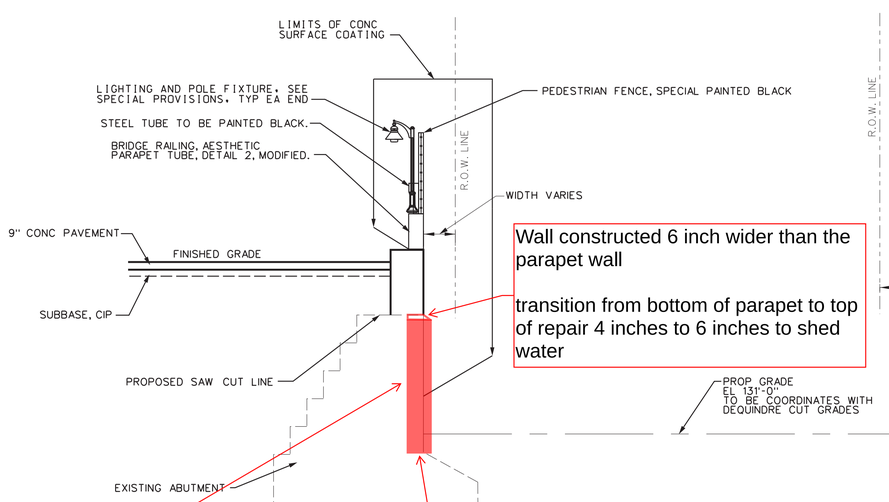

SECTION A-A

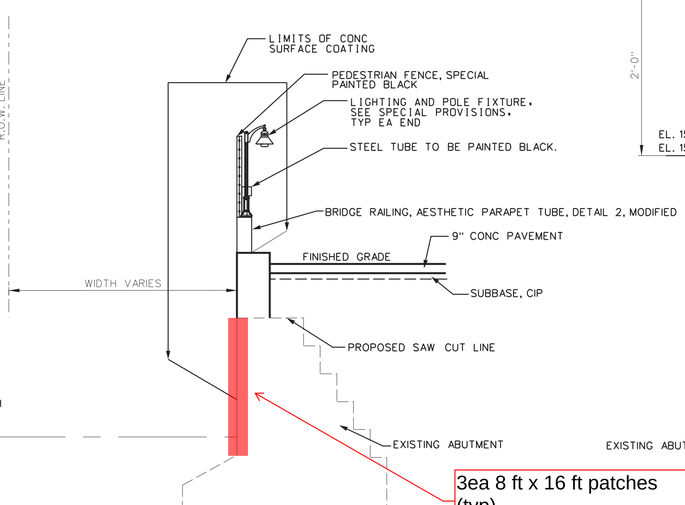

SECTION A-A

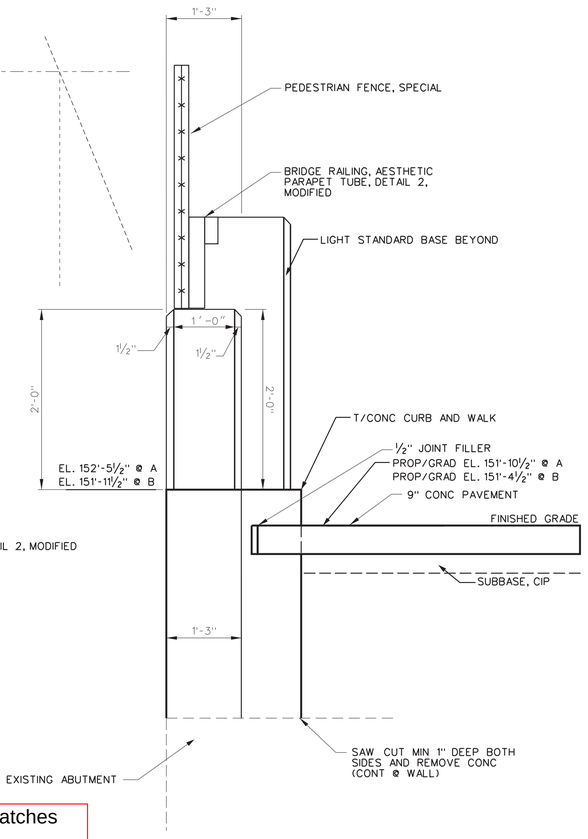

SECTION B-B

REV #	DATE	DESCRIPTION	BY

NOT VALID FOR CONSTRUCTION UNLESS SIGNED AND DATED

WADETRIM
501 Griswold, Suite 2500
Detroit, MI 48226
313.961.1860
313.961.1898
FAX: 313.961.1898
www.wadetrim.com

Building relationships on a foundation of excellence

CITY OF DETROIT
DEPARTMENT OF PUBLIC WORKS
CITY ENGINEERING DIVISION
ALFRED ST OVER DEQUINDRE CUT S.N. 12447
GENERAL PLAN OF STRUCTURE

ISSUED FOR: DATE: BY:

JOB NO. DTE 2025-11T

SHEET 5 (478)

ALFRED STREET BRIDGE

© Wade Trim Group, Inc.

PROJECT MANAGER: - FIELD BOOK INFORMATION: -
C:\pw_work\d0506079\CPS-PLTS-Plan of Structure.dgn
PLOTTED 5/21/2013 11:40:31 AM BY mzarzycka

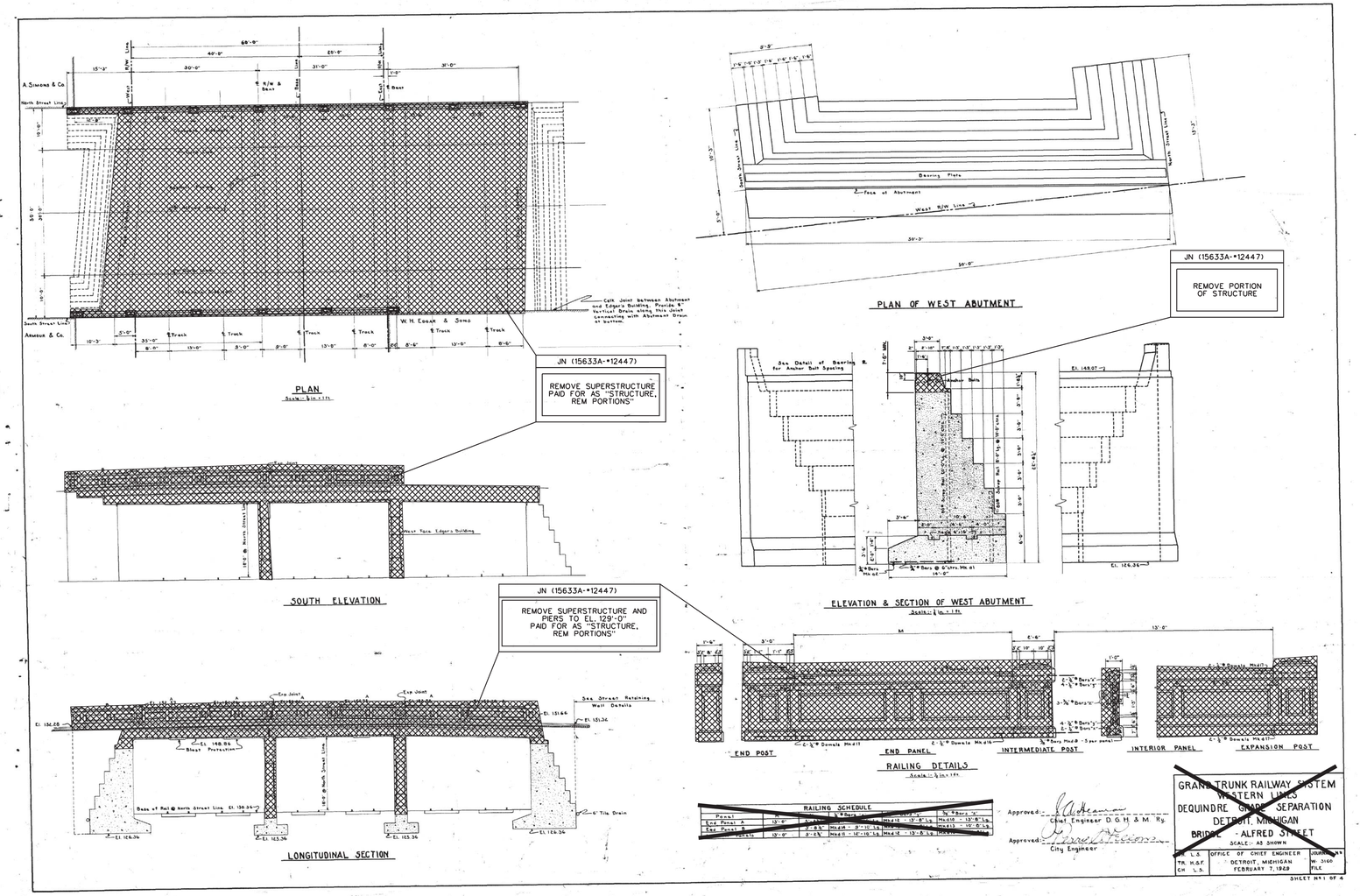

REMOVAL NOTE

JOB NO. (115633A-*12447)

DURING BRIDGE REMOVAL OPERATIONS, CARE SHALL BE TAKEN BY THE CONTRACTOR TO AVOID DAMAGING THE ADJACENT BUILDINGS THAT ARE TO REMAIN. DAMAGE TO THE BUILDINGS CAUSED BY CONTRACTORS REMOVAL OPERATIONS SHAL BE REPAIRED BY THE CONTRACTOR, AT THE CONTRACTORS EXPENSE.

REMOVAL SHEET

JOB NO. (115633A-*12447)

THE ONLY ITEMS OF WORK TO BE DONE FROM THIS SHEET ARE IDENTIFIED BY USING THE LEGEND BELOW, LABELED WITH THIS PROJECTS JOB NUMBER

PROPOSED WORK

DENOTES REMOVAL PORTIONS

REV.#	DATE	DESCRIPTION	BY

NOT VALID FOR CONSTRUCTION UNLESS SIGNED AND DATED

WADETRIM
500 Griswold, Suite 2500
Detroit, MI 48226
313.961.3650
FAX 313.961.8998
www.wadetrim.com

Building relationships on a foundation of excellence

CITY OF DETROIT
DEPARTMENT OF PUBLIC WORKS
CITY ENGINEERING DIVISION
ALFRED ST OVER DEQUINDRE CUT S.N. 124447
EXISTING BRIDGE PLANS
EXISTING PLAN (REM)

ISSUED FOR: DATE: BY:

JOB NO. DTE 2025-11T

SHEET 6 (479)

© Wade Trim Group, Inc.

ALFRED STREET BRIDGE

PROJECT MANAGER: - FIELD BOOK INFORMATION: -
c:\pw_work\d0369079\SDP-PLTS-REMOVAL.dgn
PLOTTED 5/21/2013 11:42:28 AM BY mzorzycka

JN (115633A-#12447)

REMOVE SUPERSTRUCTURE PAID FOR AS "STRUCTURE, REM PORTIONS"

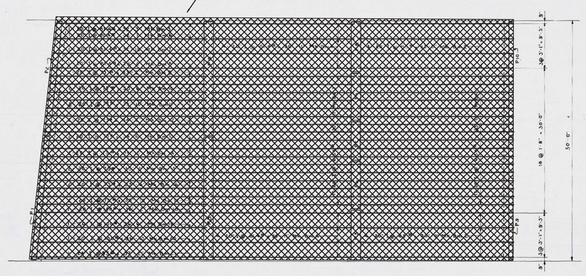

DECK STEEL PLAN

Scale:- 1/8 in. = 1 ft.

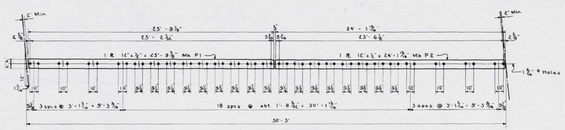

BEARING PLATE DETAIL
WEST ABUTMENT

Scale:- 1/4 in. = 1 ft.

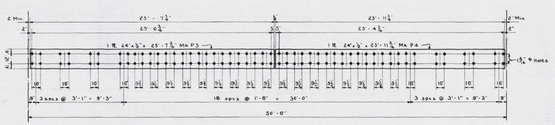

BEARING PLATE DETAIL
WEST BENT

Scale:- 1/4 in. = 1 ft.

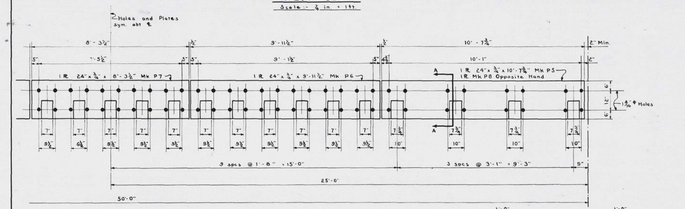

BEARING PLATE DETAIL
EAST BENT

Scale:- 1/4 in. = 1 ft.

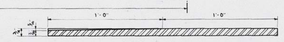

SECTION A-A
DETAIL FOR PLANING BEAM SEATS

Scale:- 3 in. = 1 ft.

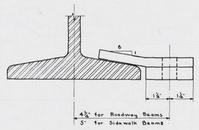

4½" for Roadway Beams
3" for Sidewalk Beams

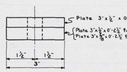

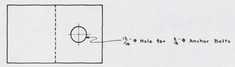

DETAIL OF I-BEAM CLIPS

Scale:- 1/2 in. = 1 in.

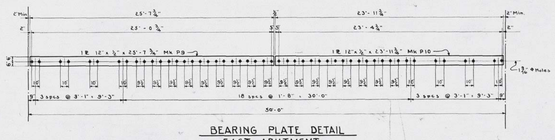

BEARING PLATE DETAIL
EAST ABUTMENT

Scale:- 1/4 in. = 1 ft.

BILL OF STRUCTURAL STEEL

DECK FLOOR BEAMS

Location	No.	Mark	Size	Length	Section Index	Remarks
Roadway - East Span	17	Bm. 1	20" I @ 65.4#	33'-0"	B3	No Fabrication
Sidewalk - East Span	8	Bm. 2	20" I @ 75.7#	33'-0"	B2	-
Roadway - Center Span	11	Bm. 3	20" I @ 65.4#	30'-11"	B3	-
Sidewalk - Center Span	8	Bm. 4	20" I @ 81.4#	30'-11"	B2	-
Sidewalk - West Span	1	Bm. 5	20" I @ 81.4#	32'-3"	B2	-
-	1	Bm. 6	20" I @ 81.4#	32'-7"	B2	-
-	1	Bm. 7	20" I @ 81.4#	32'-10"	B2	-
-	1	Bm. 8	20" I @ 81.4#	33'-1"	B2	-
Roadway - West Span	1	Bm. 9	20" I @ 75#	33'-6"	B3	-
- - -	1	Bm. 10	20" I @ 75#	33'-6"	B3	-
- - -	1	Bm. 11	20" I @ 75#	33'-10"	B3	-
- - -	1	Bm. 12	20" I @ 75#	34'-1"	B3	-
- - -	1	Bm. 13	20" I @ 75#	34'-5"	B3	-
- - -	1	Bm. 14	20" I @ 75#	34'-9"	B3	-
- - -	1	Bm. 15	20" I @ 75#	35'-1"	B3	-
- - -	1	Bm. 16	20" I @ 75#	35'-5"	B3	-
- - -	1	Bm. 17	20" I @ 75#	35'-10"	B3	-
Sidewalk - West Span	1	Bm. 18	20" I @ 81.4#	36'-1"	B2	-
- - -	1	Bm. 19	20" I @ 81.4#	36'-5"	B2	-
- - -	1	Bm. 20	20" I @ 81.4#	36'-9"	B2	-
- - -	1	Bm. 21	20" I @ 85.8#	37'	B1	-

BEARING PLATES

Location	No.	Mark	Size	Length	Remarks
West Abutment	1	P1	16" x 3/4"	23'-9 3/4"	Punch per Detail
- -	1	P2	16" x 3/4"	24'-1 3/4"	-
West Bent	1	P3	24" x 3/4"	25'-1 3/4"	-
- -	1	P4	24" x 3/4"	25'-11 3/4"	-
East Bent	1	P5	24" x 3/4"	10'-7 3/4"	Punch and Notching per Detail
- -	1	P6	24" x 3/4"	9'-11 3/4"	-
- -	1	P7	24" x 3/4"	8'-3 3/4"	-
- -	1	P8	24" x 3/4"	10'-1 3/4"	-
East Abutment	1	P9	12" x 3/4"	23'-7 3/4"	Punch per Detail
-	1	P10	12" x 3/4"	23'-11 3/4"	-

MISCELLANEOUS STEEL

Item	No.	Size Length	Description
Anchor Bolts	300	3/4" ϕ 1'-6"	Sockets Bolts with Hex. Nuts and Washers
Piles	300	—	See Detail

BILL OF WIRE MESH

Location	Ft.	Width	Description
Bottom of Deck	800	[illegible]	A. S. & W. Co. 1-No 12 Gage 4 in. Wire Mesh
Sidewalk Beams	750	46"	A. S. & W. Co. 1-No 6 Gage 4 in. Wire Mesh
Blast Protection Roadway	200	48"	A. S. & W. Co. 1-No 12 Gage 4 in. Wire Mesh
Blast Protection Sidewalk	80	36"	A. S. & W. Co. 1-No 12 Gage 4 in. Wire Mesh
Protection Coat Deck	1300	48"	A. S. & W. Co. 1-No 12 Gage 4 in. Wire Mesh

BILL OF REINFORCING STEEL

ABUTMENT

Location	No.	Mark	Size	Length	Bending Diagram
Abutment Footings	280	a1	3/4" ϕ	7'-6"	Straight
- -	8	a2	3/4" ϕ	26'-8"	-

BENT

Location	No.	Mark	Size	Length	Bending Diagram
Bottom Bent Footing	120	b1	3/4" ϕ	9'-0"	1'-6" 3'-0" 1'-6"
- -	16	b2	1" ϕ	27'-3"	1'-3"
Top Bent Footing	16	b3	3/4" ϕ	27'-0"	1'-6"
Bottom Arch Beam	16	b4	3/4" ϕ	13'-6"	7'-3" 23'-10"
- - -	16	b5	3/4" ϕ	26'-11"	1'-3" 23'-8"
Top Arch Beam	20	b6	1" ϕ	27'-1"	1'-3" 23'-10"
Footing Beam	32	a1	3/4" ϕ	7'-4"	9'-0"
Arch Beam	72	a2	3/4" ϕ	26'-8"	6'-0"
Columns	192	c1	3/4" ϕ	23'-0"	Straight
Tied End Columns	88	c2	3/4" ϕ	10'-0"	3'-6"
Tied Interior Columns	88	c3	3/4" ϕ	7'-10"	6'-6"

DECK

Location	No.	Mark	Size	Length	Bending Diagram
Roadway Deck	168	d1	3/4" ϕ	18'-0"	Straight
Sidewalk Deck	112	d2	3/4" ϕ	10'-11"	3'-9" 3'-9" 3'-9"
- -	108	d3	3/4" ϕ	11'-1"	3'-9" 3'-9" 3'-9"
- -	72	d4	3/4" ϕ	11'-10"	3'-9" 3'-9" 3'-9"
- -	24	d5	3/4" ϕ	11'-0"	3'-9"
Sidewalk Slab	408	d6	3/8" ϕ	7'-10"	Straight - To be cut in Field
- -	168	d7	3/8" ϕ	8'-4"	- - - - - -
Post Down	32	d8	3/8" ϕ	4'-6"	Straight
Vertical Railing	60	d9	3/8" ϕ	3'-8"	-
Railing	30	d10	3/8" ϕ	13'-8"	-
-	40	d11	3/8" ϕ	12'-10"	-
-	80	d12	3/8" ϕ	13'-8"	-
-	6	d13	3/8" ϕ	10'-8"	-
-	8	d14	3/8" ϕ	3'-10"	-
-	16	d15	3/8" ϕ	10'-8"	-
Railing to Post Dowels	32	d16	3/8" ϕ	3'-6"	-
- - -	24	d17	3/8" ϕ	4'-0"	-

Approved: J. A. Hanson
Chief Engineer D. G. H. & M. Ry.

Approved: Gerard M. Guinan
City Engineer

GRAND TRUNK RAILWAY SYSTEM
WESTERN LINES
DEQUINDRE GRADE SEPARATION
DETROIT, MICHIGAN
BRIDGE - ALFRED STREET
SCALE:- AS SHOWN

DR. L.S.K.	OFFICE OF CHIEF ENGINEER	JOURNAL NO.
TR.	DETROIT, MICHIGAN	DRAWING
CK. L.S.	FEBRUARY 20, 1958	FILE

SHEET No. 4 OF 4

REMOVAL NOTE

JOB NO. (115633A-#12447)

DURING BRIDGE REMOVAL OPERATIONS, CARE SHALL BE TAKEN BY THE CONTRACTOR TO AVOID DAMAGING THE ADJACENT BUILDINGS THAT ARE TO REMAIN. DAMAGE TO THE BUILDINGS CAUSED BY CONTRACTORS REMOVAL OPERATIONS SHAL BE REPAIRED BY THE CONTRACTOR, AT THE CONTRACTORS EXPENSE.

REMOVAL SHEET

JOB NO. (115633A-#12447)

THE ONLY ITEMS OF WORK TO BE DONE FROM THIS SHEET ARE IDENTIFIED BY USING THE LEGEND BELOW, LABELED WITH THIS PROJECTS JOB NUMBER

PROPOSED WORK

DENOTES REMOVAL PORTIONS

REV.#	DATE	DESCRIPTION	BY

NOT VALID FOR CONSTRUCTION UNLESS SIGNED AND DATED.

WADETRIM
500 Griswold, Suite 2900
Detroit, MI 48226
313.961.3650
313.961.3675 fax
www.wadetrim.com

Building relationships on a foundation of excellence

CITY OF DETROIT
DEPARTMENT OF PUBLIC WORKS
CITY ENGINEERING DIVISION

ALFRED ST OVER DEQUINDRE CUT S.N. 124447
EXISTING BRIDGE PLANS
EXISTING PLAN (REM)

ISSUED FOR: DATE: BY:

JOB NO. DTE 2025-11T

SHEET 7 (480)

ALFRED STREET BRIDGE

© Wade Trim Group, Inc.

PROJECT MANAGER: -
FIELD BOOK INFORMATION: -
c:\pw_work\d0369079\SDP-PLTS-REMOVAL2.dgn
PLOTTED 5/21/2013 11:46:34 AM BY mszarzycki

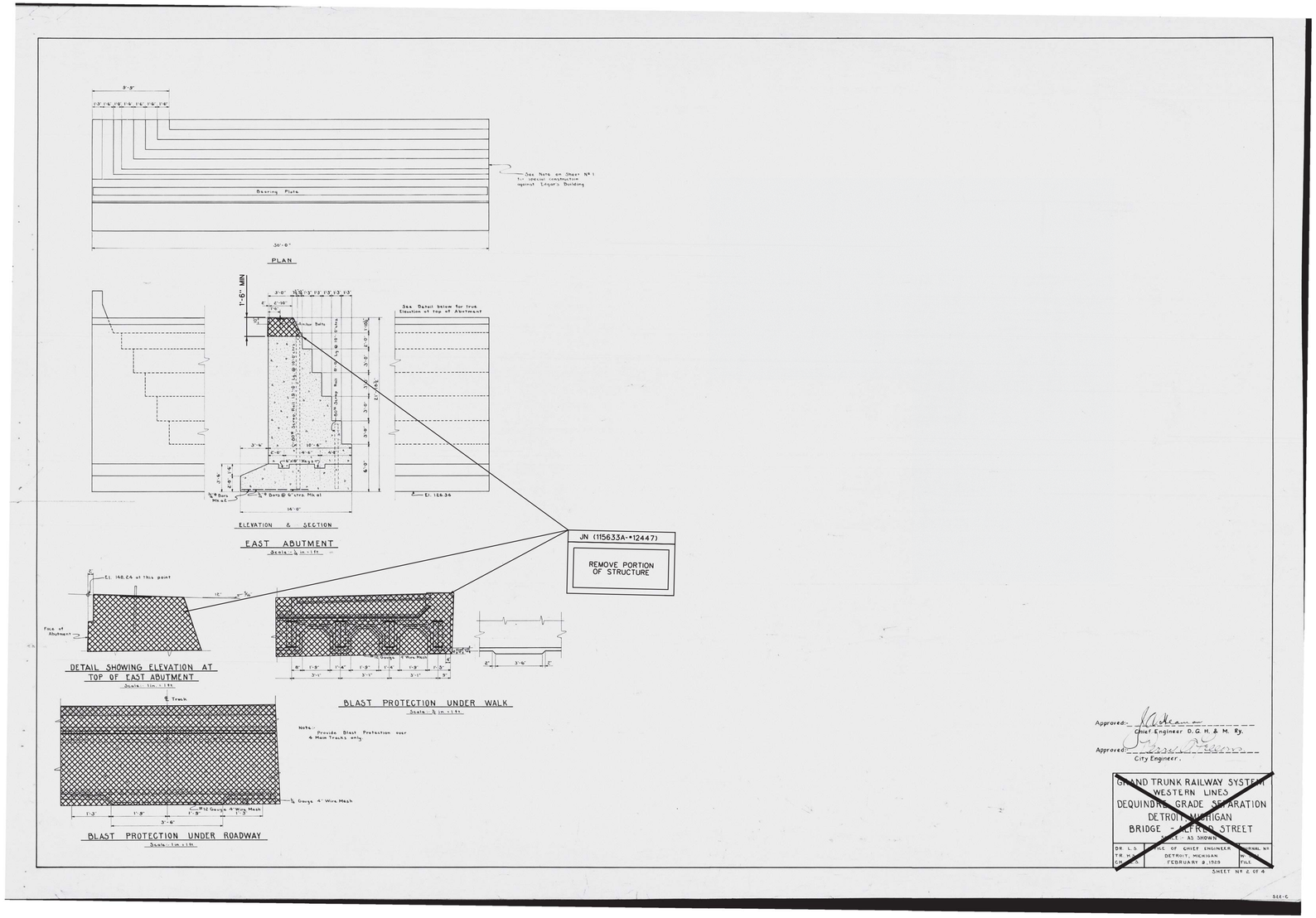

REMOVAL NOTE

JOB NO. (115633A-*12447)

DURING BRIDGE REMOVAL OPERATIONS, CARE SHALL BE TAKEN BY THE CONTRACTOR TO AVOID DAMAGING THE ADJACENT BUILDINGS THAT ARE TO REMAIN. DAMAGE TO THE BUILDINGS CAUSED BY CONTRACTORS REMOVAL OPERATIONS SHAL BE REPAIRED BY THE CONTRACTOR, AT THE CONTRACTORS EXPENSE.

REMOVAL SHEET

JOB NO. (115633A-*12447)

THE ONLY ITEMS OF WORK TO BE DONE FROM THIS SHEET ARE IDENTIFIED BY USING THE LEGEND BELOW, LABELED WITH THIS PROJECTS JOB NUMBER

PROPOSED WORK

DENOTES REMOVAL PORTIONS

REV.#	DATE	DESCRIPTION	BY

NOT VALID FOR CONSTRUCTION UNLESS SIGNED AND DATED:

WADE TRIM
500 Griswold, Suite 2500
Detroit, MI 48226
313.961.3650
FAX 313.961.8809
www.wadetrim.com

Building relationships on a foundation of excellence

CITY OF DETROIT
DEPARTMENT OF PUBLIC WORKS
CITY ENGINEERING DIVISION
ALFRED ST OVER DEQUINDRE CUT S.N. 12447
EXISTING BRIDGE PLANS
EXISTING PLAN (REM)

ISSUED FOR: DATE: BY:

JOB NO. DTE 2025-11T

SHEET 8 (481)

© Wade Trim Group, Inc.

ALFRED STREET BRIDGE

PROJECT MANAGER: - FIELD BOOK INFORMATION: -
c:\pw_work\d0369079\SDP-PLTS-REMOVAL3.dgn
PLOTTED 5/21/2013 11:50:26 AM BY mzarzycka

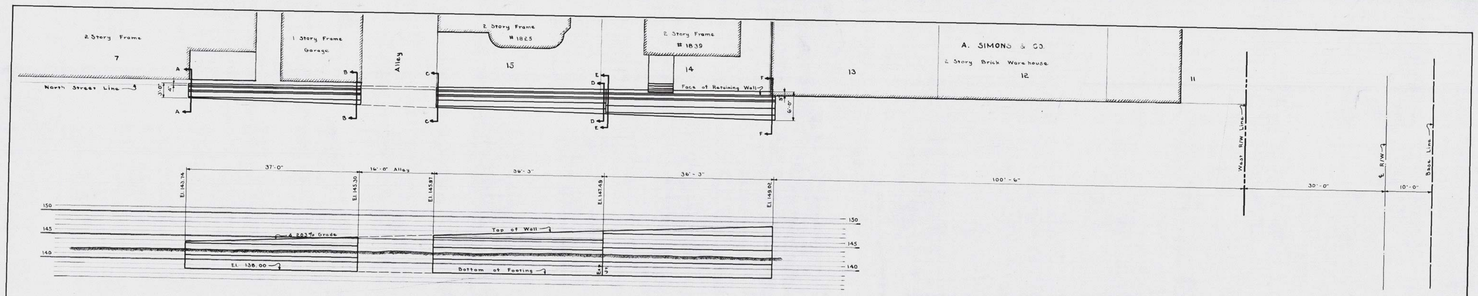

PLAN & ELEVATION
NORTH SIDE - WEST OF R/W
Scale: 1/8 in. = 1 ft.

JN (115633A-#12447)

THE WALL SECTIONS SHOWN HERE HAVE BEEN ALTERED IN THE FIELD. THIS SHEET PROVIDED FOR INFORMATION ONLY.

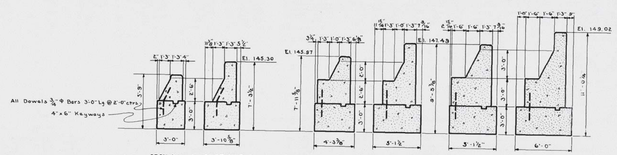

SECTION A-A SECTION B-B SECTION C-C SECTION D-D SECTION E-E SECTION F-F

WALL SECTIONS
Scale: 1/8 in. = 1 ft.

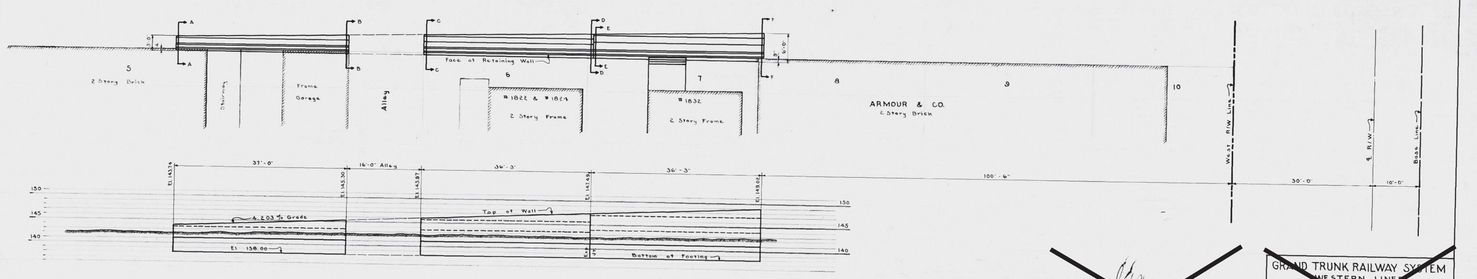

PLAN & ELEVATION
SOUTH SIDE - WEST OF R/W
Scale: 1/8 in. = 1 ft.

Approved: Chief Engineer D. G. H. & M. Ry.
Approved: Ry Engineer

GRAND TRUNK RAILWAY SYSTEM
WESTERN LINE
DEQUINDRE GRADE SEPARATION
DETROIT, MICHIGAN
RETAINING WALLS - ALFRED STREET
SCALE: AS SHOWN
DR. H.C.S. TR. J.S.F.
OFFICE OF CHIEF ENGINEER
DETROIT, MICHIGAN
APRIL 12, 1929
DRAWING No. W-3100 FILE
SHEET No 2 OF 2

FOR INFORMATION ONLY

EXISTING

JOB NO. (115633A-#12447)
FOR INFORMATION ONLY
DO NOT WORK FROM THIS SHEET. INFORMATION SHOWN HERE IS FOR REFERENCE ONLY. NO PAY ITEMS SHOWN.

REV.#	DATE	DESCRIPTION	BY

NOT VALID FOR CONSTRUCTION UNLESS SIGNED AND DATED.

WADETRIM
500 Griswold, Suite 2900
Detroit, MI 48226
313.961.3650
313.961.3651 (fax)
www.wadetrim.com
Building relationships on a foundation of excellence

CITY OF DETROIT
DEPARTMENT OF PUBLIC WORKS
CITY ENGINEERING DIVISION
ALFRED ST OVER DEQUINDRE CUT S.N. 12447
EXISTING BRIDGE PLANS
EXISTING PLAN-INFO ONLY

ISSUED FOR: DATE: BY:

JOB NO. DTE 2025-11T

SHEET 9 (482)

ALFRED STREET BRIDGE

© Wade Trim Group, Inc.

PROJECT MANAGER: -
FIELD BOOK INFORMATION: -
c:\pw_work\d0369079\SDP-PLTS-REMOVAL4.dgn
PLOTTED 5/21/2013 11:54:10 AM BY mzarzycka

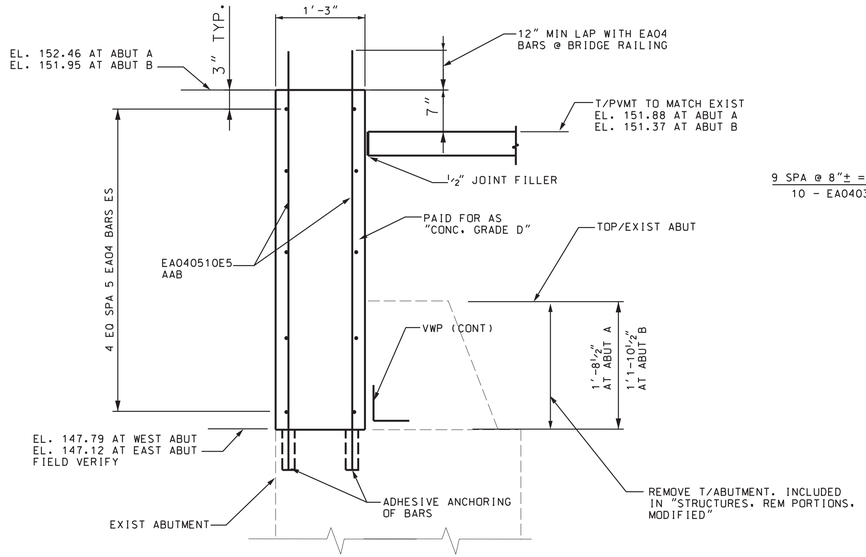

SECTION A-A

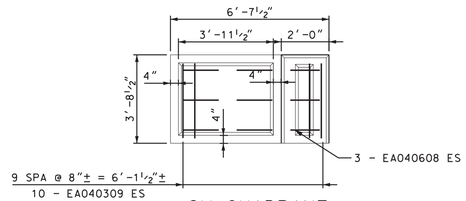

SW QUADRANT

PAID FOR AS "AESTHETIC CONCRETE RAILING. SPECIAL"

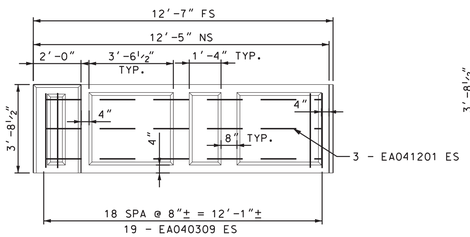

NW QUADRANT

PAID FOR AS "AESTHETIC CONCRETE RAILING. SPECIAL"

NOTE: ALL QUADRANTS VIEWED FROM STREET SIDE.

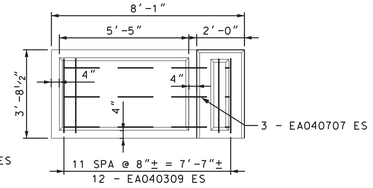

NE QUADRANT

PAID FOR AS "AESTHETIC CONCRETE RAILING. SPECIAL"

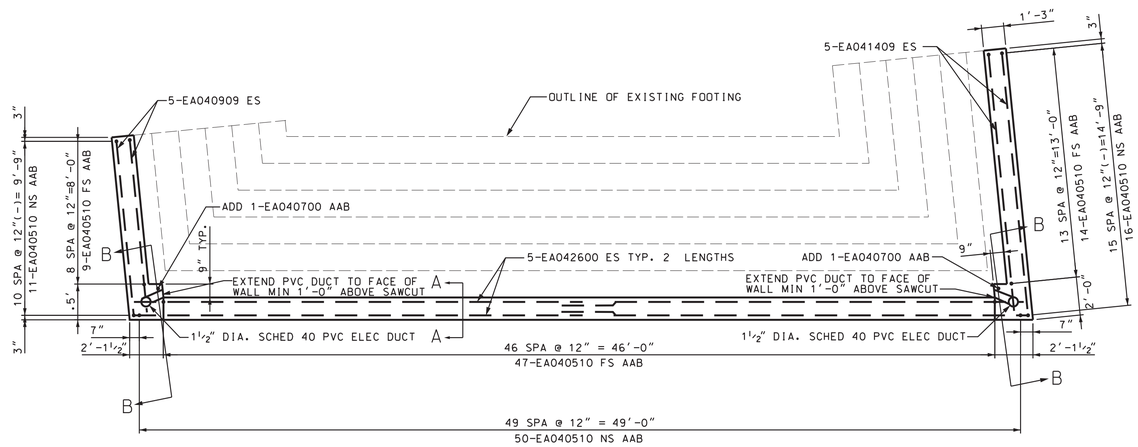

WEST ABUTMENT PLAN

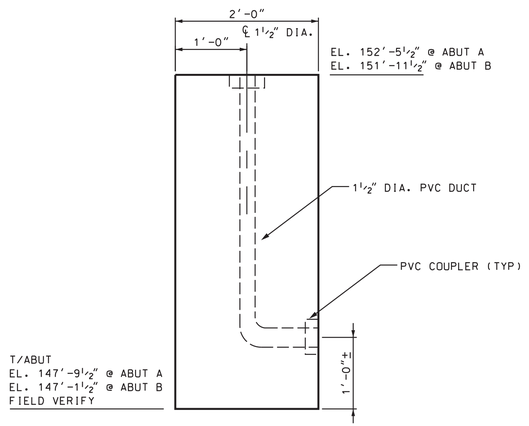

SECTION B-B

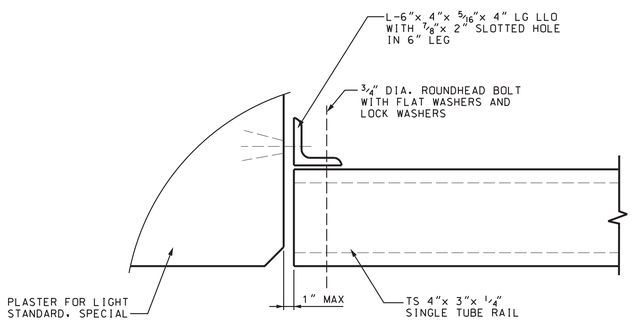

CONNECTION DETAIL

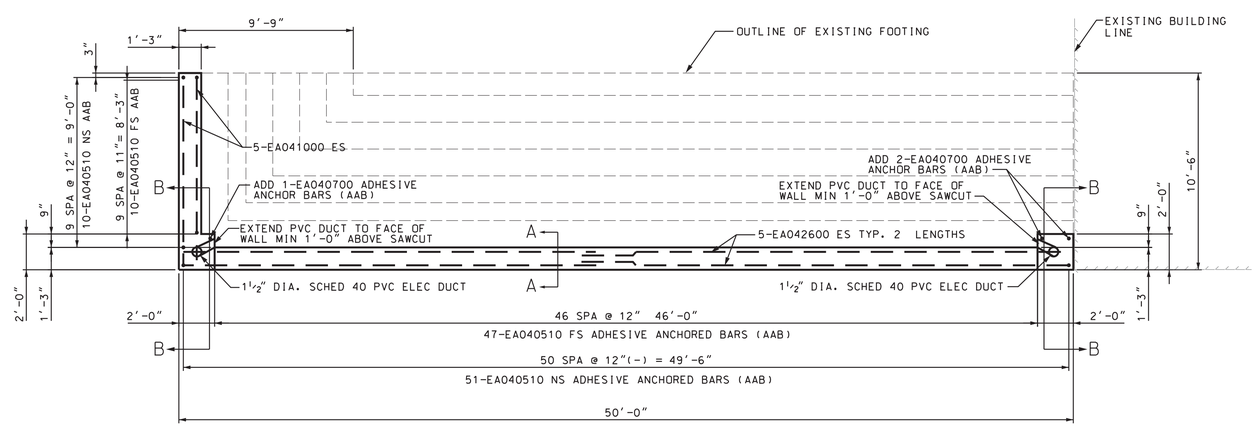

EAST ABUTMENT PLAN

WORK THIS SHEET WITH SHEETS 11, 13

REV#	DATE	DESCRIPTION	BY

NOT VALID FOR CONSTRUCTION UNLESS SIGNED AND DATED:

WADETRIM
500 Griswold, Suite 2900
Detroit, MI 48226
313.961.3650
FAX 313.961.0998
www.wadetrim.com

Building relationships on a foundation of excellence

CITY OF DETROIT
DEPARTMENT OF PUBLIC WORKS
CITY ENGINEERING DIVISION
ALFRED ST OVER DEQUINDRE CUT S.N. 124447
SUPERSTRUCTURE DETAILS

ISSUED FOR: DATE: BY:

JOB NO. DTE 2025-11T

SHEET 10 (483)

ALFRED STREET BRIDGE

© Wade Trim Group, Inc.

PROJECT MANAGER: - FIELD BOOK INFORMATION: -
c:\pw_work\d0359079\CSP-PLTS-SuperstructureDetailSheet.dgn
PLOTTED 5/21/2013 11:58:10 AM BY mszarzycka

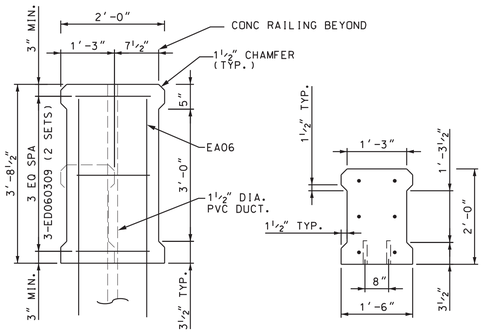

SECTION A-A

SECTION C-C

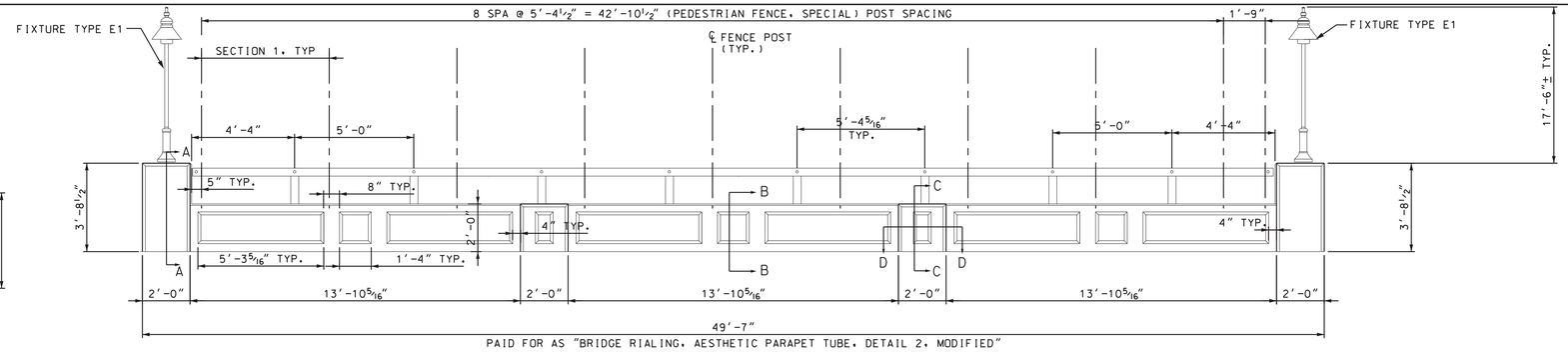

WEST RAILING ELEVATION

NO SCALE

NOTE:
VIEW FROM ALFRED ST WEST OF BRIDGE
LOOKING AT INNER FACE OF RAILING.

MISCELLANEOUS QUANTITIES		
100	FT	BRIDGE RAILING, AESTHETIC PARAPET TUBE, DETAIL 2, MODIFIED
40	FT	AESTHETIC CONCRETE RAILING, SPECIAL
780	SFT	PEDESTRIAN FENCE, SPECIAL

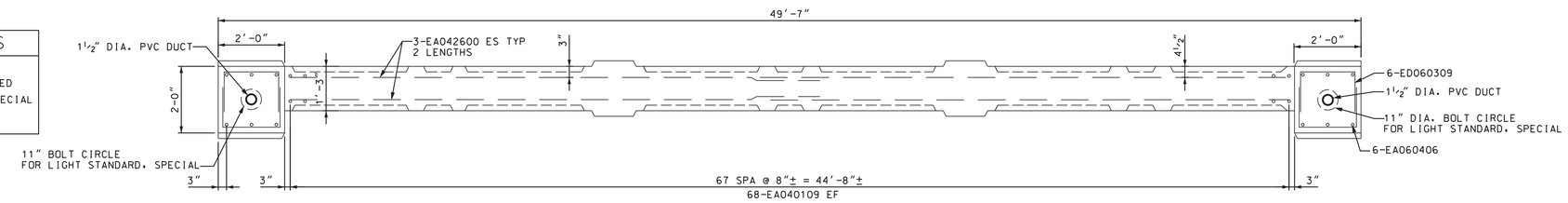

WEST RAILING PLAN

NO SCALE

NOTE:
PEDESTRIAN FENCE, SPECIAL NOT SHOWN FOR
CLARITY

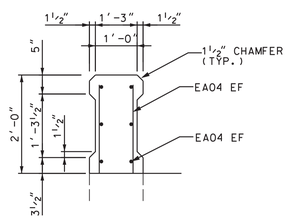

SECTION B-B

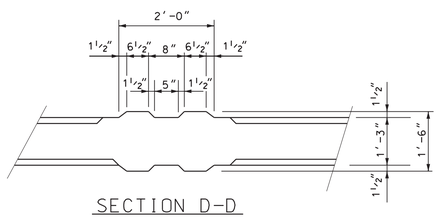

SECTION D-D

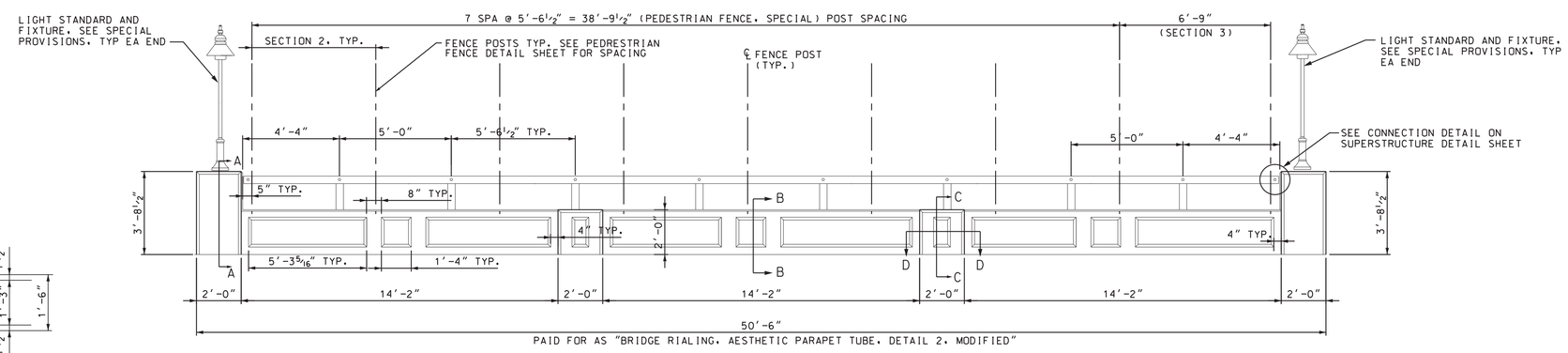

EAST RAILING ELEVATION

NO SCALE

NOTE:
VIEW FROM ALFRED ST EAST OF BRIDGE
LOOKING AT INNER FACE OF RAILING.

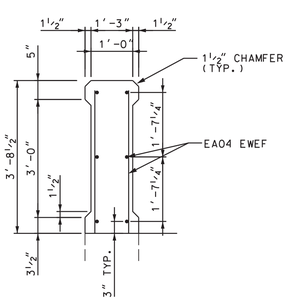

AESTHETIC CONC RAILING, SPECIAL - DETAIL

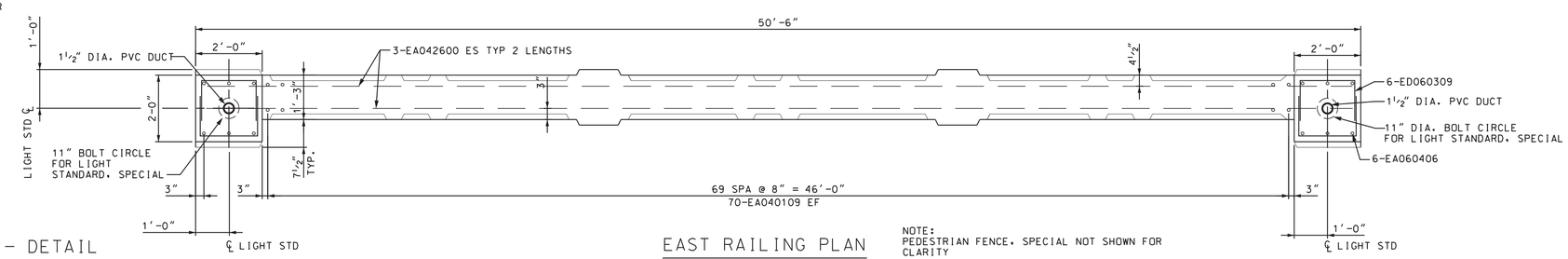

EAST RAILING PLAN

NO SCALE

NOTE:
PEDESTRIAN FENCE, SPECIAL NOT SHOWN FOR
CLARITY

REV.#	DATE	DESCRIPTION	BY

NOT VALID FOR CONSTRUCTION UNLESS SIGNED AND DATED:

WADETRIM
500 Griswold, Suite 2500
Detroit, MI 48226
313.961.3650
FAX 313.961.0966
www.wadetrim.com

Building relationships on a foundation of excellence

CITY OF DETROIT
DEPARTMENT OF PUBLIC WORKS
CITY ENGINEERING DIVISION
ALFRED ST OVER DEQUINDRE CUT S.N. 124447
RAILING DETAILS

ISSUED FOR: DATE: BY:

JOB NO. DTE 2025-11T

SHEET 11 (484)

ALFRED STREET BRIDGE

© Wade Trim Group, Inc.

PROJECT MANAGER: -
FIELD BOOK INFORMATION: -
z:\sw_work\d0369079\CRP-PLTS-RailingDetailPlan.dgn
PLOTTED 5/21/2013 12:00:17 PM BY mzarzycka

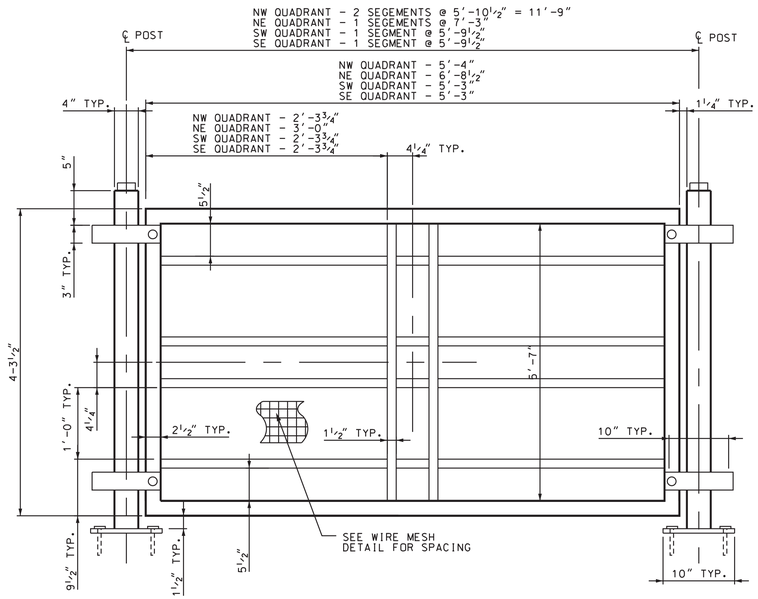

TYPICAL FENCE PANEL SECTION ON RETURN WALL

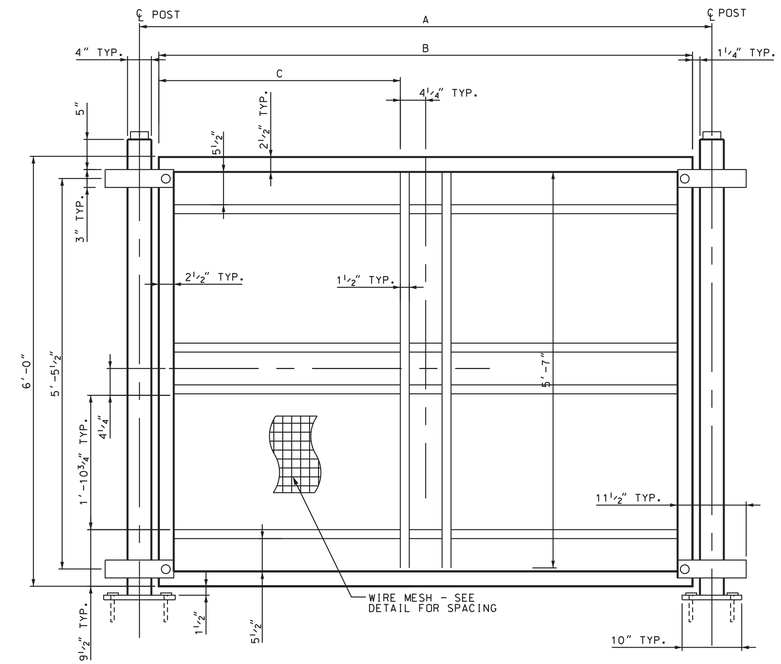

TYPICAL FENCE PANEL SECTION ON ABUTMENT

FENCE POST SPACING ON ABUTMENT

	LENGTH		
SECTION	A	B	C
1	5'-4 5/16"	4'-7 13/16"	2'-10 7/8"
2	5'-6½"	5'-0"	2'-½"
3	6'-9"	6'-2½"	1'-8¾"

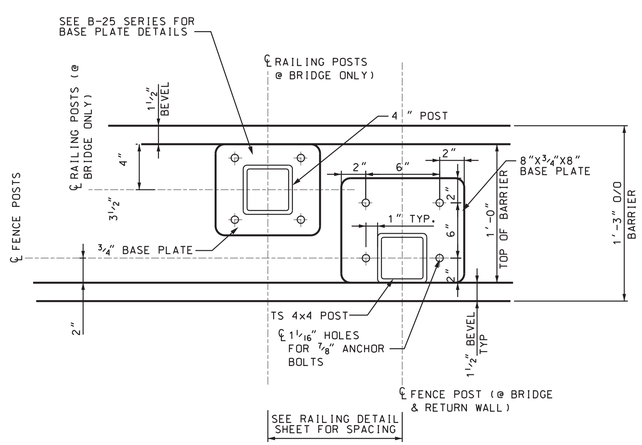

POST BASE PLATE DETAILS

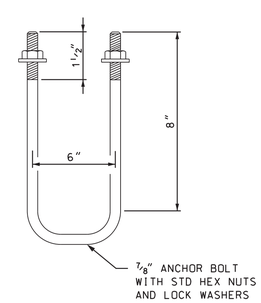

FENCE POST
ANCHOR BOLT DETAIL

REV#	DATE	DESCRIPTION	BY

NOT VALID FOR CONSTRUCTION UNLESS SIGNED AND DATED:

WADETRIM
Building relationships on a foundation of excellence
500 Griswold, Suite 2500
Detroit, MI 48226
313.961.3650
FAX 313.961.0998
www.wadetrim.com

CITY OF DETROIT
DEPARTMENT OF PUBLIC WORKS
CITY ENGINEERING DIVISION
ALFRED ST OVER DEQUINDRE CUT S.N. 124447
PEDESTRIAN FENCE DETAILS

ISSUED FOR: DATE: BY:

JOB NO. DTE 2025-11T

SHEET 12 (485)

ALFRED STREET BRIDGE

© Wade Trim Group, Inc.

PROJECT MANAGER: -
FIELD BOOK INFORMATION: -
z:\hw_work\d0369079\CSP-PLTS-PedestrianFenceDetails.dgn
PLOTTED 5/21/2013 12:01:32 PM BY mzarzycka

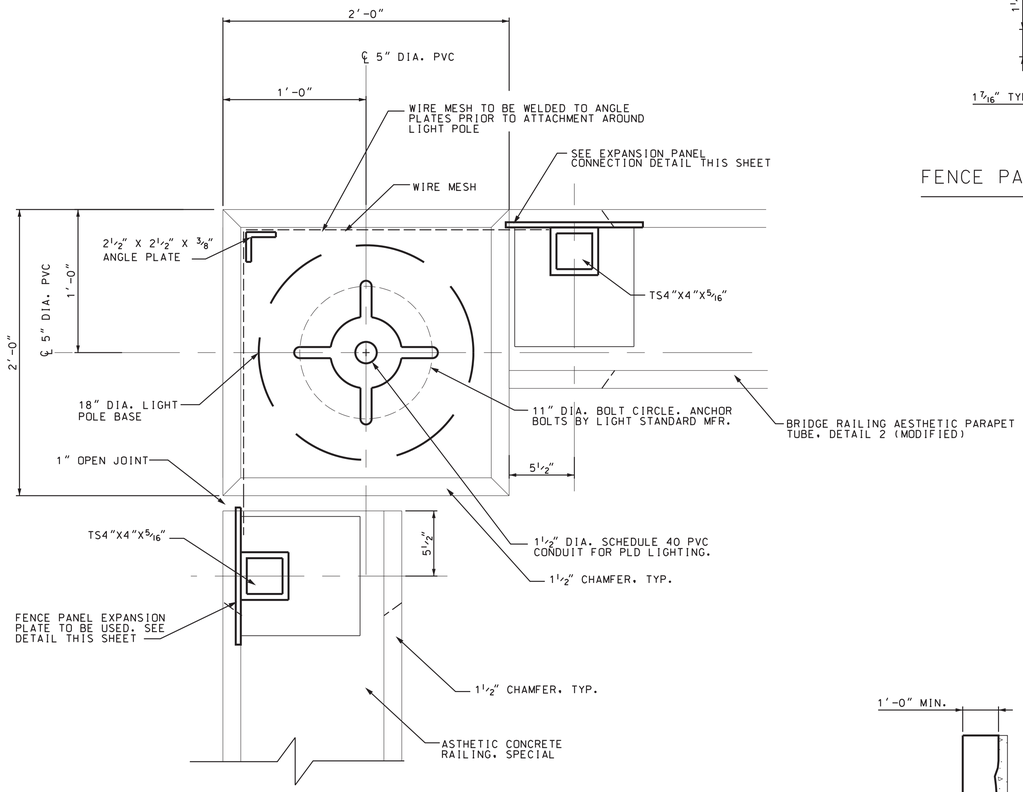

PEDESTRIAN FENCE @ LIGHT POLE DETAIL

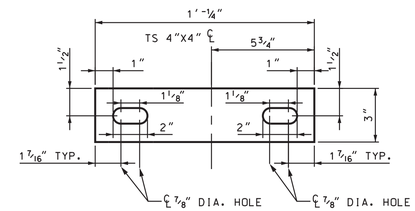

FENCE PANEL EXPANSION PLATE DETAIL

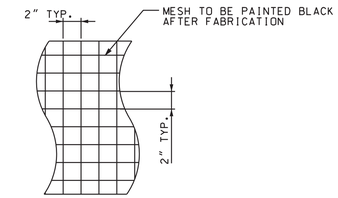

WIRE MESH DETAIL

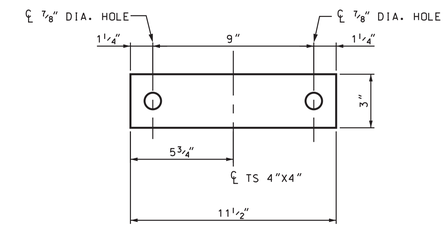

FENCE PANEL CONNECTION PLATE DETAIL

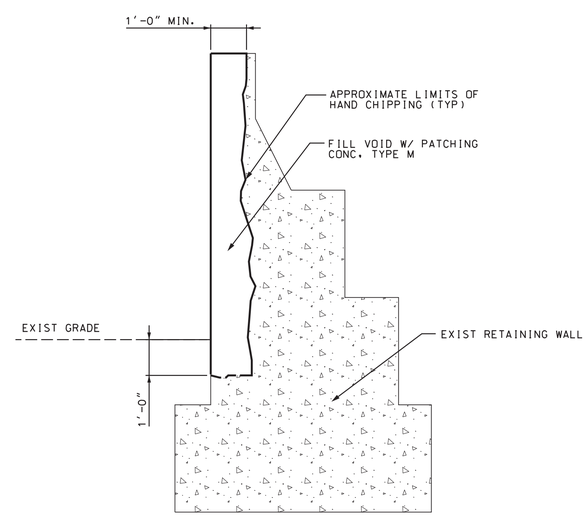

SECTION C-C

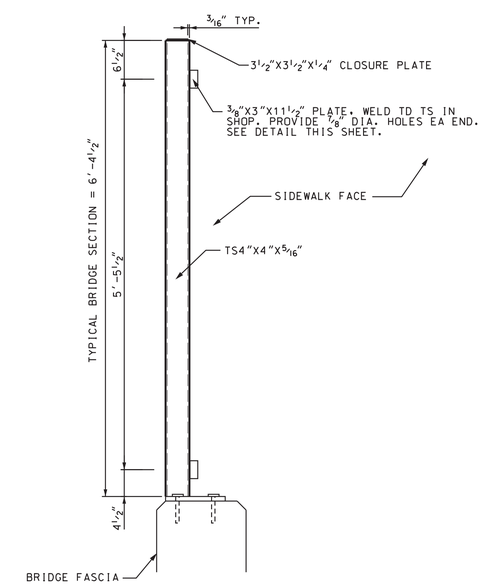

FENCE POST DETAIL

REV#	DATE	DESCRIPTION	BY

NOT VALID FOR CONSTRUCTION UNLESS SIGNED AND DATED:

WADETRIM
500 Griswold, Suite 2600
Detroit, MI 48226
313.961.3650
FAX 313.961.0998
www.wadetrim.com

Building relationships on a foundation of excellence

CITY OF DETROIT
DEPARTMENT OF PUBLIC WORKS
CITY ENGINEERING DIVISION
ALFRED ST OVER DEQUINDRE CUT S.N. 124447
PEDESTRIAN FENCE DETAILS

ISSUED FOR: DATE: BY:

JOB NO. DTE 2025-11T

SHEET 13 (486)

ALFRED STREET BRIDGE

© Wade Trim Group, Inc.

PROJECT MANAGER: - FIELD BOOK INFORMATION: -
c:\pw_work\d0369079\CSP-PLTS-PedestrianFenceDetails2.dgn
PLOTTED 5/21/2013 12:02:41PM BY mzorzycka

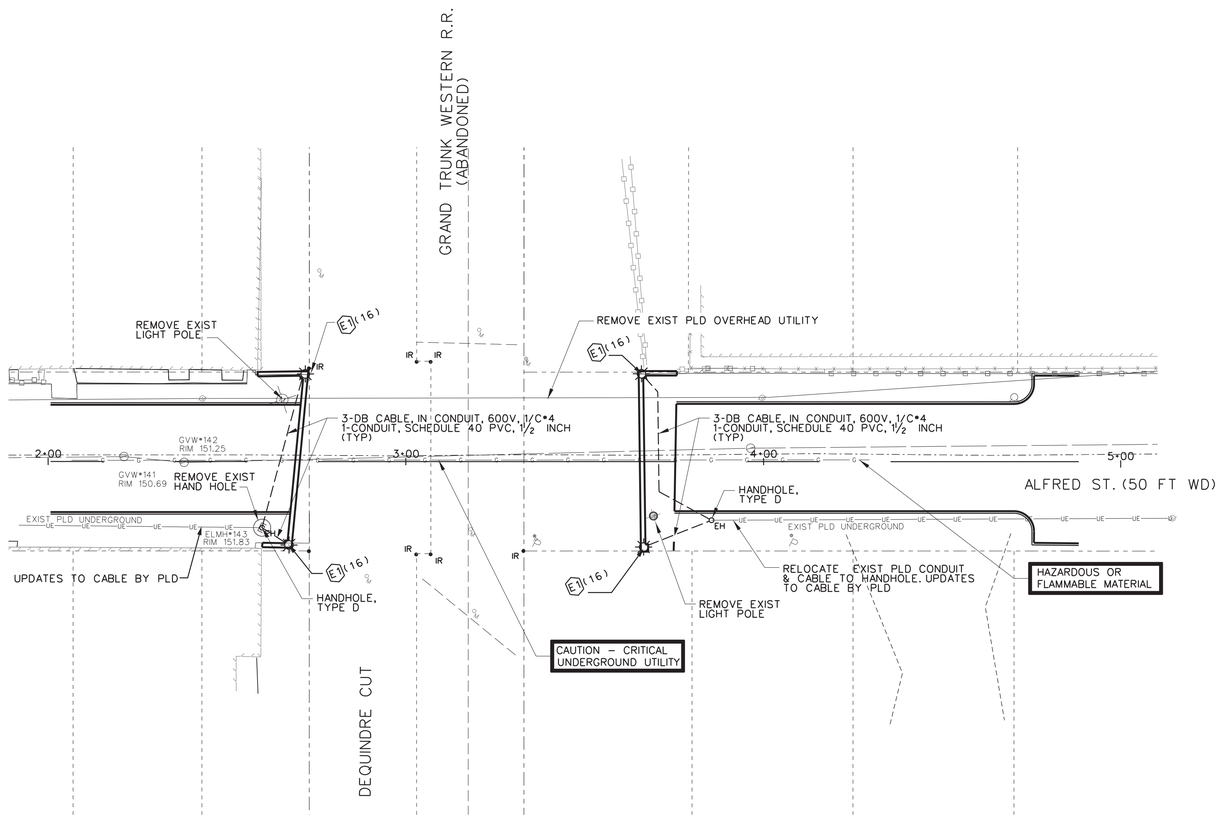

SITE PLAN

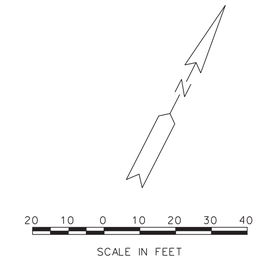

PLD QUANTITIES

80	FT	CABLE, REM
130	FT	CONDUIT, SCHEDULE 40 PVC, 1½ INCH
2	EA	Hh, TYPE D
4	EA	FIXTURE TYPE E1
400	FT	DB CABLE, IN CONDUIT, 600V, 1/C*4

NOTES:

REMOVAL OF EXIST CONDUIT IN BRIDGE DECK INCLUDED IN PAY ITEM " STRUCTURES, REM, PORTIONS, MODIFIED"

FOR DETAILS OF FIXTURE TYPE E1 SEE PROJECT SHEET 396 (WILKINS SHEET 30) FOR DETAILS AND FIXTURE SCHEDULE.

THE NUMBER FOLLOWING E1 INDICATES POLE HEIGHT

REV'#	DATE	DESCRIPTION	BY

NOT VALID FOR CONSTRUCTION UNLESS SIGNED AND DATED:

WADETRIM
500 Griswold, Suite 2500
Detroit, MI 48226
313.961.3650
FAX 313.961.8809
www.wadetrim.com

Building relationships on a foundation of excellence

CITY OF DETROIT
DEPARTMENT OF PUBLIC WORKS
CITY ENGINEERING DIVISION
ALFRED ST OVER DEQUINDRE CUT S.N. 12447
PLD PLAN AND DETAILS

ISSUED FOR: DATE: BY:

JOB NO. DTE 2025-11T

SHEET 14 (487)

ALFRED STREET BRIDGE

© Wade Trim Group, Inc.

PROJECT MANAGER: - FIELD BOOK INFORMATION: -
c:\pw_work\d0369079\CEP-PLTS-Plan of Site.dgn
PLOTTED 5/21/2013 12:04:04 PM BY mzarzycka

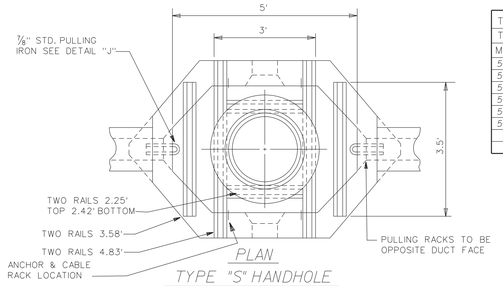

PLAN
TYPE "S" HANDHOLE
N.T.S.

TYPE "S" HANDHOLE TABLE FOR #5 BARS		
MARK	NO.	LENGTH
5-50	2	5'
5-46	8	4.5'
5-36	4	3.5'
5-30	6	2'
5-19	10	2'
5-10	8	12"

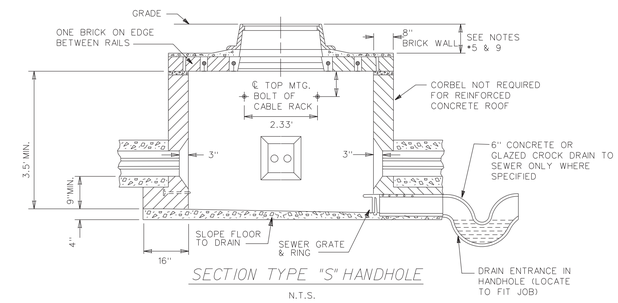

SECTION TYPE "S" HANDHOLE
N.T.S.

TYPE "D" HANDHOLE TABLE FOR #4 BARS		
MARK	NO.	LENGTH
4-46	3	54"
4-40	4	48"
4-39	4	45"
4-36	4	42"
4-30	3	36"
4-16	1	18"
4-13	8	15"
4-10	4	12"

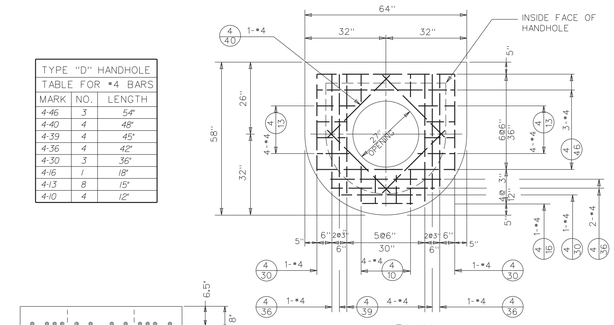

PLAN
ALTERNATE ROOF-TYPE "D" HANDHOLE
N.T.S.

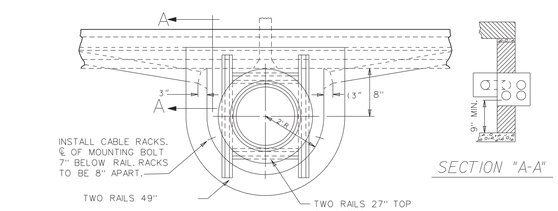

PLAN

SECTION "A-A"

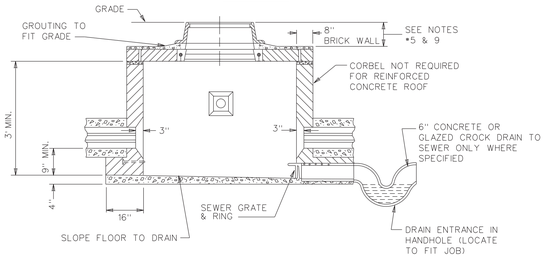

SECTION TYPE "D" HANDHOLE
N.T.S.

NOTE:

1. DUCT ENTRANCE TO BE BUILT AS REQUIRED.
2. ALL RAILS TO BE 60#/YD. OR HEAVIER.
3. CABLE PULLING IRONS TO BE GALVANIZED
4. CABLE RACKS AND ARMS TO BE GALVANIZED.
5. IN PAVEMENT PROVIDE AT LEAST 3" BETWEEN ROOF AND BASE OF PAVEMENT. WHERE EXISTING GRADE IS HIGHER THAN PROP. FUTURE GRADE INSTALL BRICK RING OR GROUT (AS REQ'D.) UNDER FRAME TO ALLOW FOR FUTURE FRAME ADJUSTMENT.
6. BAR NUMBERS DENOTE THE SIZE OF BAR REQUIRED IN ACCORDANCE WITH CURRENT USAGE SPECIFIED BY THE CONCRETE REINFORCING STEEL INSTITUTE.
7. EXCAVATION LIMITS FOR PUBLIC LIGHTING DEPARTMENT HANDHOLES SHALL BE ON VERTICAL PLANES OF THE FOOTING OUTLINE.
8. INSTALL ANCHORS & CABLE-RACKS AS SHOWN.
9. WHERE HANDHOLES ARE LOCATED BACK OF CURBS ROOF MUST BE BUILT 18" BELOW CURB GRADE, TO PROVIDE FOR FUTURE WIDENING.

CABLE RACKS
3" STD. 4.1# CHANNEL
N.T.S.

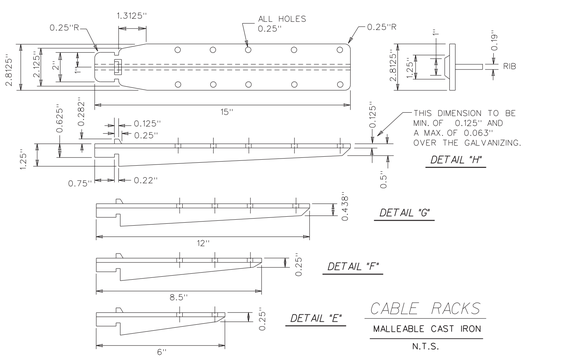

CABLE RACKS
MALLEABLE CAST IRON
N.T.S.

NOTE:

BELL ENDS ARE REQUIRED ON EACH CONDUIT BROKEN OUT IN HANDHOLE. TYPE AND SIZE SHALL BE IDENTICAL TO CONDUIT TYPE AND SIZE.

NOTE:

CABLE RACKS SHALL BE GALV. AFTER FAB. IN ACCORDANCE WITH ASTM A-123.

CABLE ARMS SHALL BE GALV. AFTER FAB. IN ACCORDANCE WITH ASTM A-153 53.

ARMS MUST FIT ON INSIDE & OUTSIDE OF RACKS & MUST ALLOW INSULATOR TO FIT LOOSELY.

USE 0.5" GALV. SUPPORTING BOLTS AND EXPANSION ANCHORS.

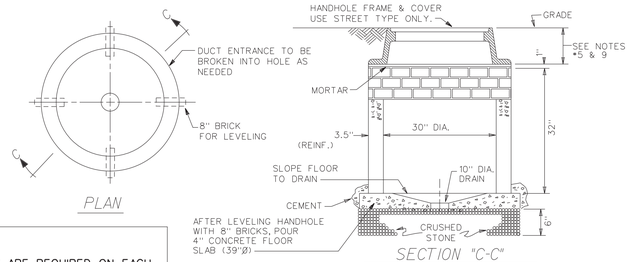

PLAN

SECTION "C-C"

REINFORCED CONCRETE PIPE (CLASS III)
ROUND HANDHOLE

NOTE:

1. FRAMES MAY BE A.S.T.M. CLASS 30 GRAY IRON IF THE CONTRACTOR SO ELECTS.
2. ALL FILLETS ARE 0.5" RADIUS & ALL ROUNDS ARE 0.25" RADIUS

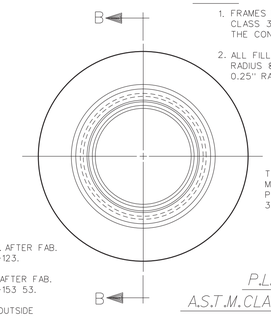

P.L.C. PATTERN NO.1A
A.S.T.M. CLASS 20 OR 30 GRAY IRON
APPROX. 251 LBS.
HANDHOLE FRAME

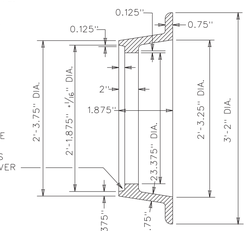

SECTION "B-B"

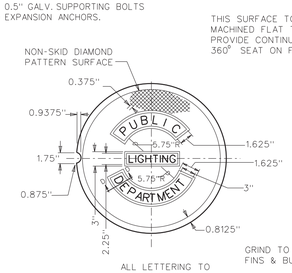

SECTION "D-D"

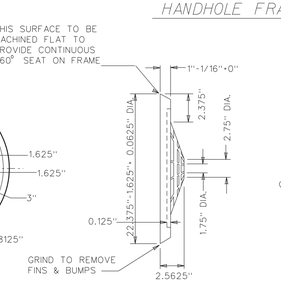

P.L.C. PATTERN NO.2A
A.S.T.M. CLASS 30 GRAY IRON
APPROX. WT. 145 LBS.
STREET TYPE COVER
TO BE USED IN STREETS & DRIVES

SECTION "E-E"

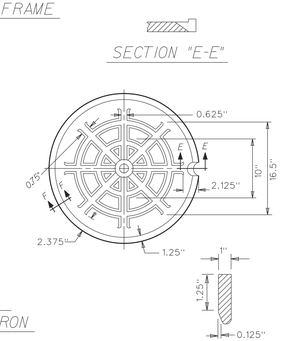

SECTION "F-F"

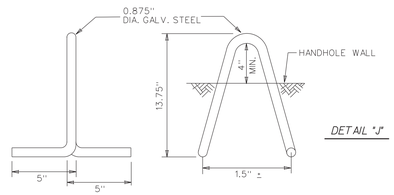

PULLING IRON
N.T.S.

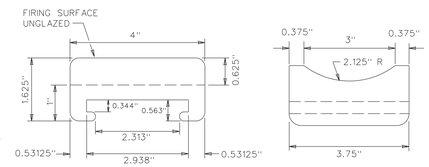

DETAIL "J"

CABLE ARM INSULATORS
WHITE GLAZED PORCELAIN DRY PROCESS
N.T.S.

REV#	DATE	DESCRIPTION	BY

NOT VALID FOR CONSTRUCTION UNLESS SIGNED AND DATED.

WADE TRIM
500 Griswold, Suite 2500
Detroit, MI 48226
313.961.3650
FIRM LICENSE NO. 21000900
www.wadetrim.com
Building relationships on a foundation of excellence

CITY OF DETROIT
DEPARTMENT OF PUBLIC WORKS
CITY ENGINEERING DIVISION
ALFRED ST OVER DEQUINDRE CUT S.N. 124447
PLD STANDARD DETAILS

ISSUED FOR: DATE: BY:

JOB NO. DTE 2025-11T

SHEET 15 (488)

ALFRED STREET BRIDGE

© Wade Trim Group, Inc.

PROJECT MANAGER: -
FIELD BOOK INFORMATION: -
z:\sw_work\d0369079\CDT-PLTS-PLD\detailSheet.dgn
PLOTTED 5/21/2013 12:08:06 PM BY mzarzycka

	BAR	DIMENSIONS												NO. REQ'D	TOTAL WT.
		a	b	c	d	e	f	g	h	j	k	m	p		
RAILING	EA040203	2'-3"												276	415
	EA042500	25'-0"												12	200
	EA042600	26'-0"												12	208
	EA060406	4'-6"												24	162
	ED060309	1'-2"	1'-6"	1'-2"										24	135
														TOTAL = 1120	

	BAR	DIMENSIONS												NO. REQ'D	TOTAL WT.
		a	b	c	d	e	f	g	h	j	k	m	p		
AESTHETIC CONCRETE RAILING, SPECIAL	EA040309	3'-9"												82	205
	EA040608	6'-8"												6	27
	EA040707	7'-7"												6	30
	EA041201	12'-1"												6	48
														TOTAL = 310	

	BAR	DIMENSIONS												NO. REQ'D	TOTAL WT.
		a	b	c	d	e	f	g	h	j	k	m	p		
ABUTMENT-CAP	EA040510	5'-10"												270	1052
	EA040909	9'-9"												10	65
	EA041000	10'-0"												10	67
	EA041409	14'-9"												10	99
	EA042600	26'-0"												40	695
														TOTAL = 1978	

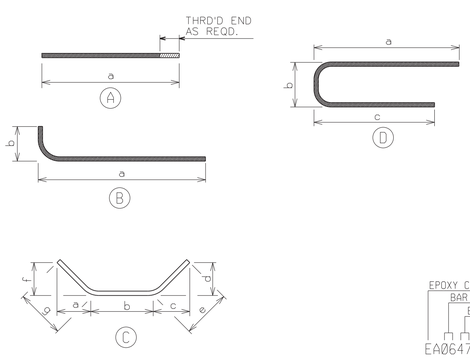

REINFORCEMENT SHALL BE BUNDLED AND TAGGED AS TO THE LOCATION AS SHOWN ON THIS SHEET.

EPOXY COATED
BAR SIZE
BAR LENGTH (FT)
BAR LENGTH (IN)
EA064700
BAR SHAPE
BAR LEGEND

MISCELLANEOUS QUANTITIES		
3,408	Lb	Reinforcement, Steel, Epoxy Coated

BILL OF MATERIALS: ROAD ITEMS (PART 1)

ITEM NUMBER	ITEM DESCRIPTION	TOTAL PLAN QUANTITY	ITEM UNIT
1027051	AUDIO-VISUAL FILMING (SN 12447)	1	LS
2050030	MACHINE GRADING	4	STA
2040050	PAVT, REM	894	SYD
2040055	SIDEWALK, REM	282	SYD
2040070	UTILITY POLE, REM	1	EA
3010002	SUBBASE, CIP	30	CYD
3020010	AGGREGATE BASE, 4 INCH	805	SYD
6020166	CONC PAVT WITH INTEGRAL CURB, NONREINF, 9 INCH	805	SYD
7060010	CONC, GRADE D	23	CYD
7067011	TEXTURING CONC	74	SYD
7060082	REINFORCEMENT, STEEL, EPOXY COATED	3408	LB
7100001	JOINT WATERPROOFING	268	SFT
7100011	CONC SURFACE COATING	155	SYD
7117001	AESTHETIC CONCRETE RAILING, SPECIAL	40	FT
7117001	BRIDGE RAILING, AESTHETIC PARAPET TUBE, DETAIL 2, MODIFIED	100	FT
7120032	ADHESIVE ANCHORING OF VERTICAL BAR, 1/2 INCH	270	EA
8030044	SIDEWALK, CONC, 4 INCH	2214	SFT
8070002	GUARDRAIL, TYP T	80	FT
8077050	TERMINAL END SHOE, TYPE T	8	EA
8077050	STEEL PIPE BOLLARD	4	EA
8080015	FENCE, CHAIN LINK, 96 INCH	40	FT
8087010	PEDESTRICAN FENCE, SPECIAL	780	SFT
8100340	POST HOLE THROUGH CONC FOR STEEL POST	6	EA
8100371	POST, STEEL, 3 LB	84	FT
8100403	SIGN, TYPE III, REM	11	EA
8100405	SIGN, TYPE IIIB	50	SFT
8100404	SIGN, TYPE IIIA	5	SFT
8120020	BARRICADE, TYPE III, HIGH INTENSTIY, FURN	10	EA
8120021	BARRICADE, TYPE III, HIGH INTENSTIY, OPER	10	EA
8120170	MINOR TRAF DEVICES (SN 12447)	1	LS
8120350	SIGN, TYPE B, TEMP, PRISMATIC, FURN	207	SFT
8120351	SIGN, TYPE B, TEMP, PRISMATIC, OPER	188	SFT
8120352	SIGN, TYPE B, TEMP, PRISMATIC, SPECIAL, FURN	55	SFT
8120353	SIGN, TYPE B, TEMP, PRISMATIC, SPECIAL, OPER	50	SFT
8160100	SLOPE RESTORATION, TYPE A	90	SYD
8190016	CABLE, REM	80	FT
8190146	CONDUIT, SCHEDULE 40, 1 1/2 INCH	130	FT
8190262	HH, TYPE D	2	EA
8190207	DB CABLE, IN CONDUIT, 600V, 1/C#4	400	FT
8197050	FIXTURE TYPE E1	4	EA
8230431	GATEBOX, ADJ, CASE 1	3	EA

BILL OF MATERIALS: BRIDGE ITEMS (PART 2)

ITEM NUMBER	ITEM DESCRIPTION	TOTAL PLAN QUANTITY	ITEM UNIT
2040001	ASBESTOS MATERIALS, REMOVAL AND DISPOSAL	5000	DLR
2047051	RELOCATION AND SITE CLEANUP (SN 12447)	1	LS
2047051	STRUCTURES, REM PORTIONS, MODIFIED (SN 12447)	1	LS
2090001	PROJECT CLEANUP (SN 12447)	1	LS
7120007	HAND CHIPPING, OTHER THAN DECK	80	CFT
7120017	PATCH, FORMING	80	SFT
7120115	PATCHING CONC, M	9	CYD
8197050	PROTECTION, FIBER OPTIC LINE, BRIDGE	4	EA
8197051	COORDINATION, FIBER OPTIC LINE (SN 12447)	1	LS

REV.#	DATE	DESCRIPTION	BY

NOT VALID FOR CONSTRUCTION UNLESS SIGNED AND DATED.

WADE TRIM
500 Griswold, Suite 2500
Detroit, MI 48226
313.961.3650
FAX 313.961.0966
www.wadetrim.com

Building relationships on a foundation of excellence

CITY OF DETROIT
DEPARTMENT OF PUBLIC WORKS
CITY ENGINEERING DIVISION
ALFRED ST OVER DEQUINDRE CUT S.N. 12447
BILL OF MATERIALS/STEEL REINFORCEMENT

ISSUED FOR: DATE: BY:

JOB NO. DTE 2025-11T

SHEET 16 (489)

ALFRED STREET BRIDGE

© Wade Trim Group, Inc.

PROJECT MANAGER: -
FIELD BOOK INFORMATION: -
c:\pw_work\d0369079\CFP-PLTS-Schedules.dgn
PLOTTED 5/21/2013 12:09:39 PM BY mzorzysko

CITY OF DETROIT
DEPARTMENT OF PUBLIC WORKS
IN COOPERATION WITH
MICHIGAN DEPARTMENT OF TRANSPORTATION
AND
FEDERAL HIGHWAY ADMINISTRATION

HAMTRAMCK CONNECTOR
DETROIT, MICHIGAN / WAYNE COUNTY

MDOT
Michigan Department of Transportation

LOCAL AUTHORITY APPROVAL

CITY OF DETROIT
CITY ENGINEERING DIVISION
DEPARTMENT OF PUBLIC WORKS
900 CADILLAC TOWER
DETROIT, MICHIGAN 48226

Sheet List Table - Hamtramck Connector	
Sheet Number	Sheet Title
H-G0.0	COVER
H-G0.1	MDOT QUANTITIES
H-G0.2	OVERALL PLAN
H-C1.1	PAVING PLANS - MACK AVE. TO ST. AUBIN AVE.
H-C1.2	PAVING PLANS - ST. AUBIN AVE.
H-C1.3	PAVING PLANS - GRAND BLVD E. TO HAMTRAMCK DR.
H-C1.4	PAVING PLANS - HAMTRAMCK DR.
H-C1.5	DETAILS

Project Description: (2.5 Miles/ 13424 Feet Project Length)

The Hamtramck Connector will consist of on-street dedicated bike lanes extending from the northern end point of the Dequindre Cut Ph. II project to the City of Hamtramck. The improvements will include pavement markings within the street Right-Of-Way and bike signage to define the bike connector route. The Hamtramck Connector will provide a non-motorized connection to the planned greenway system for the City of Hamtramck.

Submittal:	Date:	Revision:
100% CONSTRUCTION DOCUMENTS	APRIL 1, 2013	0
BIDDING DOCUMENTS	MAY 2, 2013	1
BIDDING DOCUMENTS	MAY 21, 2013	2

Owner/Designer:

TRAFFIC ENGINEERING DIVISION
2633 MICHIGAN AVENUE
DETROIT, MI 48216
www.detroitmi.gov

Drawing Scale:

ORIGINAL DRAWINGS PREPARED AS 24X36 SHEETS. GRAPHIC SCALES SHOWN ON SHEETS SHALL TAKE PRECEDENCE OVER ANY OTHER NOTED SCALES.

3 WORKING DAYS
BEFORE YOU DIG
CALL MISS DIG
1-800-482-7171

HAMTRAMCK CONNECTOR

PREPARED UNDER SUPERVISION OF

STATE OF MICHIGAN
PRASAD L V NANNAPANENI
ENGINEER
No. 51397
LICENSED PROFESSIONAL ENGINEER

REGISTERED PROFESSIONAL ENGINEER

51397
REGISTRATION NUMBER

Item Description	Units	Mack (RR-St Aubin)	St Aubin (Mack-Harper)	St Aubin (Harper-Gr Blv)	St Aubin (Crossover)	Grand Blvd (St Aub-Bridge)	St Aubin (Bridge-City Lim)	St Aubin (City Lim-Ham Lim)	Hamtramck (Ham-Jos. Camp.)	Hamtramck Connector Total
SITE PREPARATION, EROSION CONTROL AND DEMOLITION										
Pavt Mrkg, Longit, 6 inches or Less Width, Rem	Ft	1250	1750	770	0	1640	320	176	1300	**7,206**
Rem Spec Mrkg	Sft	200	700	0	0	1100	0	0	80	**2,080**
SIGNAGE AND STRIPING										
Sign, Type IIIB	Sft	70	266	14	7	42	42	14	56	**511**
Post, Steel, 3 LB	Ft	105	399	21	10.5	63	63	21	84	**767**
Perforated Steel Square Tube Sign Breakaway System	Ea	10	38	2	1	6	6	2	8	**73**
Pavt Mrkg, Sprayable Thermopl, 4 inch, White	Ft	1270	11420	770	75	3640	1460	875	6510	**26,020**
Pavt Mrkg, Sprayable Thermopl, 6 inch, White	Ft	1270	11420	770	75	2425	1170	700	5200	**23,030**
Pavt Mrkg, Ovly Cold Plastic, 12 inch, Crosswalk	Ft	70	540	0	0	760	0	0	0	**1,370**
Pavt Mrkg, Ovly Cold Plastic, 18 inch, Stop Bar	Ft	50	105	0	0	230	0	0	20	**405**
_Pavt Mrkg, Ovly Cold Plastic, Handicap Sym, Blue	Ea	0	0	0	0	0	0	0	2	**2**
Pavt Mrkg, Ovly Cold Plastic, Lt Turn Arrow Sym	Ea	0	0	0	0	0	0	0	2	**2**
_Pavt Mrkg, Waterborne, Bike	Ea	6	29	2	1	6	4	2	8	**58**
_Pavt Mrkg, Waterborne, Directional Arrow Sym, Bike	Ft	6	29	2	1	6	4	2	8	**58**

3 WORKING DAYS BEFORE YOU DIG CALL MISS DIG 1-800-482-7171

Hamtramck Connector

Hamtramck Connector
Detroit, Michigan

MDOT
Michigan Department of Transportation

Owners:

City of Detroit
Traffic Engineering Division

ISSUED FOR	REV	DATE
BIDDING DOCUMENTS	2	MAY.21.2013
BIDDING DOCUMENTS	1	MAY.02.2013
100% CONSTRUCTION DOCUMENTS	0	APR.01.2013

SEALS AND SIGNATURES

KEY PLAN

DRAWING TITLE

MDOT QUANTITIES

GRAPHIC SCALE TAKES PRECEDENCE
FULL SIZE SCALE (24x36) N/A

PROJECT NUMBER

H-G0.1

DRAWING NUMBER

FILE: P:\50565.000\CAD\L\Sheet\Hamtramck\PAY ITEM.dwg USER: jgreene DATE: May, 22 2013 TIME: 09:02 am

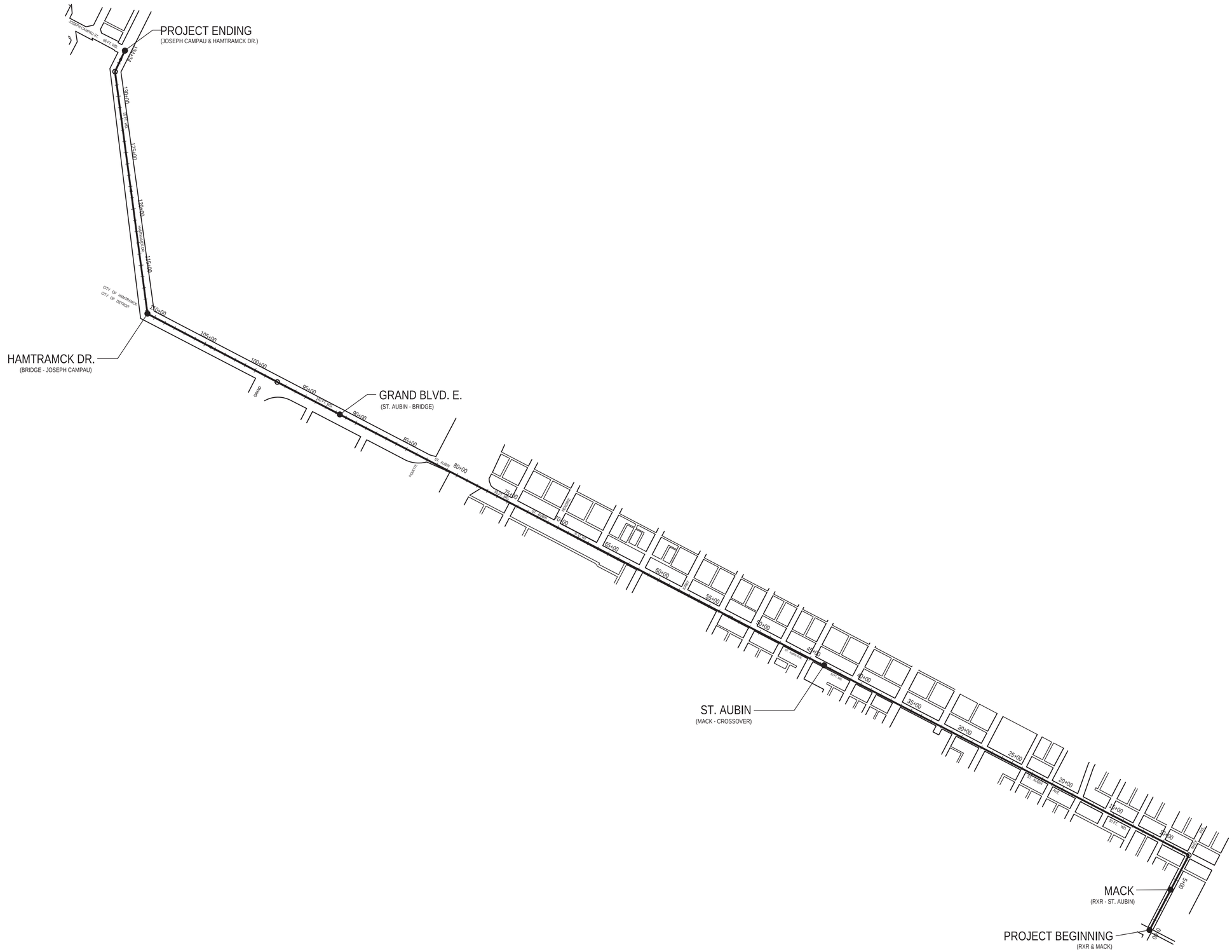

3 WORKING DAYS
BEFORE YOU DIG
CALL MISS DIG
1-800-482-7171

Hamtramck Connector

Hamtramck Connector
Detroit, Michigan

MDOT
Michigan Department of Transportation

Owners:

City of Detroit
Traffic Engineering Division

ISSUED FOR	REV	DATE
BIDDING DOCUMENTS	2	MAY.21.2013
BIDDING DOCUMENTS	1	MAY.02.2013
100% CONSTRUCTION DOCUMENTS	0	APR.01.2013

SEALS AND SIGNATURES

KEY PLAN

DRAWING TITLE

OVERALL PLAN

0 200' 400' 800'

GRAPHIC SCALE TAKES PRECEDENCE
FULL SIZE SCALE (24x36) 1"=400'

PROJECT NUMBER

H-G0.2

DRAWING NUMBER

FILE: P:\50565.000\CAD\LL\Sheet\Hamtramck\H-C1.6.dwg USER: jgreene DATE: May, 22 2013 TIME: 09:02 am

MACK
RXR – ST. AUBIN

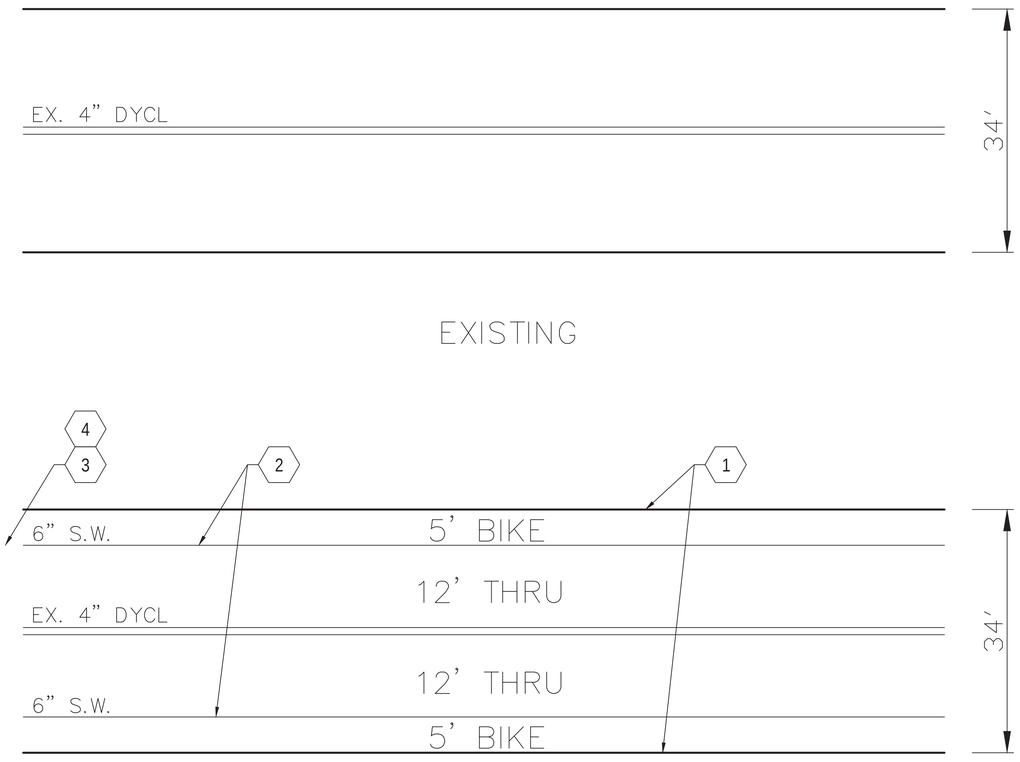

APPLIES: STA. 0 TO 7

ST. AUBIN
MACK – HARPER

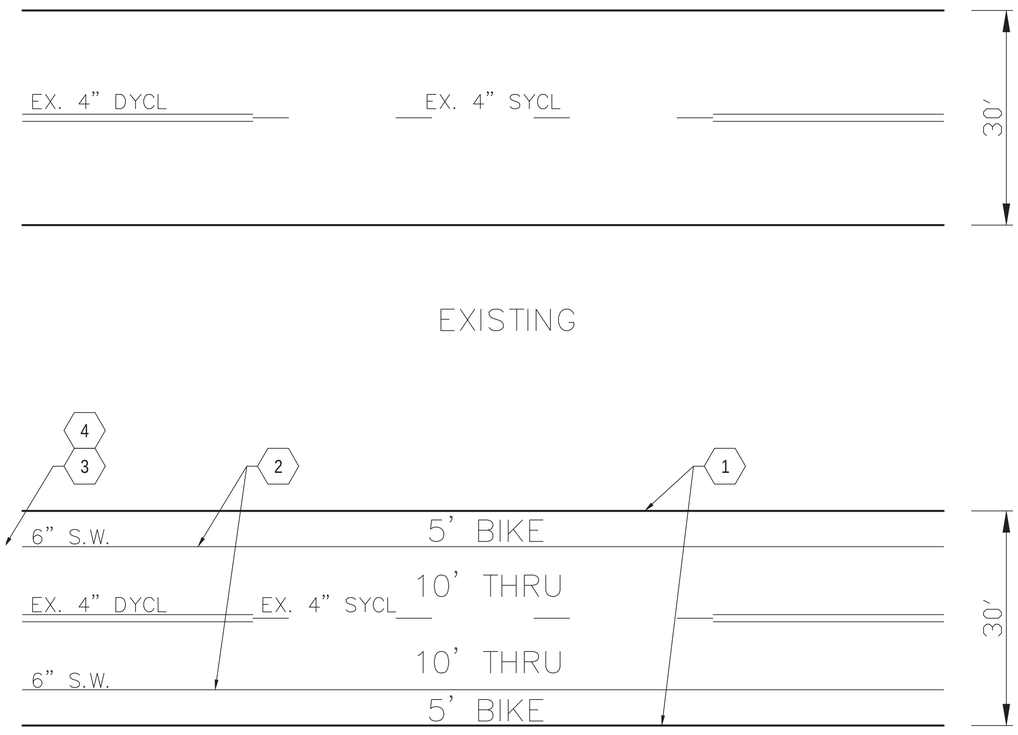

APPLIES: STA. 7 TO 78

REFER TO DRAWING H-C1.5 FOR KEY NOTES LEGEND.

3 WORKING DAYS BEFORE YOU DIG CALL MISS DIG 1-800-482-7171

Hamtramck Connector

Hamtramck Connector
Detroit, Michigan

MDOT Michigan Department of Transportation

Owners:

City of Detroit
Traffic Engineering Division

ISSUED FOR	REV	DATE
BIDDING DOCUMENTS	2	MAY.21.2013
BIDDING DOCUMENTS	1	MAY.02.2013
100% CONSTRUCTION DOCUMENTS	0	APR.01.2013

SEALS AND SIGNATURES

KEY PLAN

DRAWING TITLE

PAVING PLANS - MACK AVE. TO ST. AUBIN AVE.

0 5' 10' 20'

GRAPHIC SCALE TAKES PRECEDENCE
FULL SIZE SCALE (24x36) 1"=10'-0"

PROJECT NUMBER

DRAWING NUMBER H-C1.1

FILE:P:\50565.000\CAD\LL\Sheet\Hamtramck\H-C1.1.dwg USER:jgreene DATE:May. 22 2013 TIME: 09:02 am

ST. AUBIN
HARPER – GRAND BLVD. E.

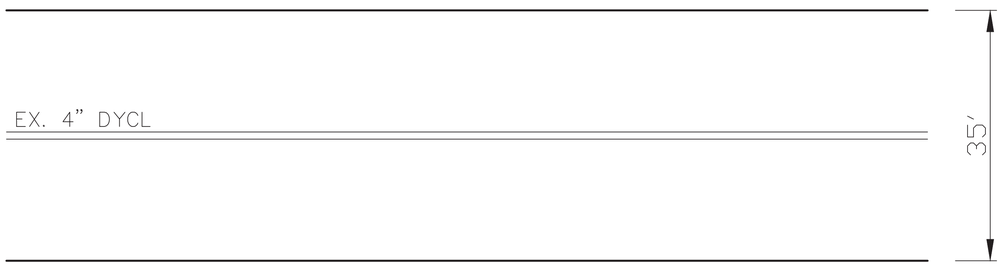

EXISTING

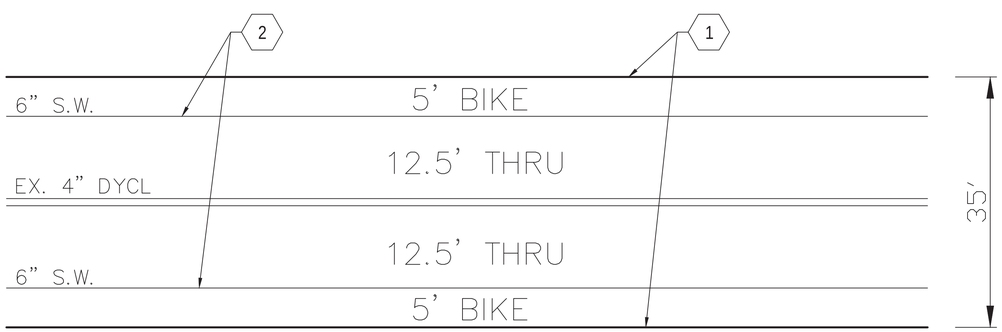

PROPOSED

APPLIES STA. 78 TO 85

ST. AUBIN
GRAND BLVD. E. – CROSSOVER

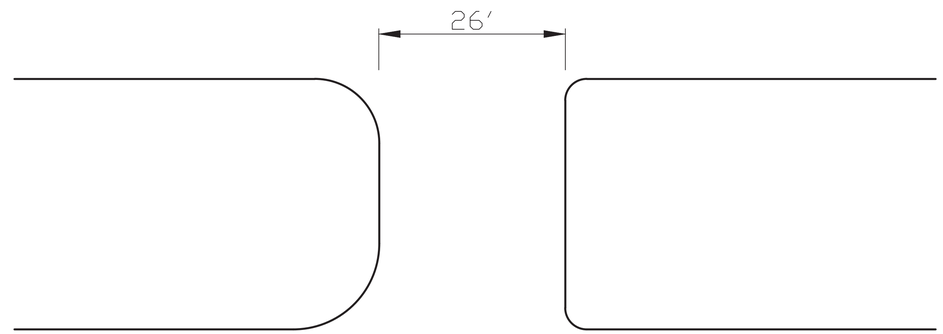

EXISTING

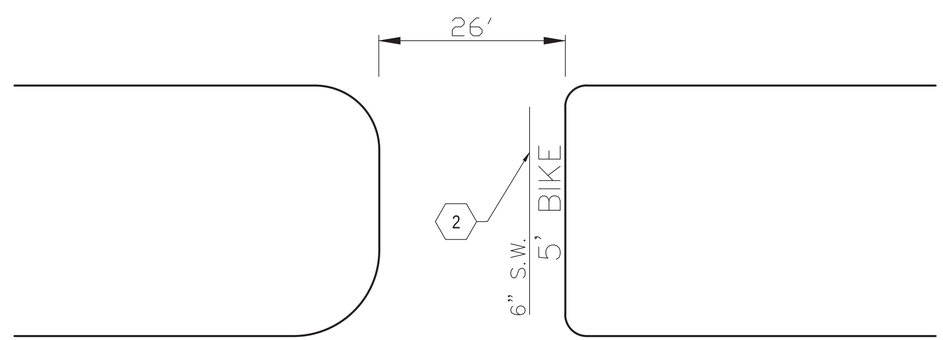

PROPOSED

APPLIES STA. 85 TO 86

REFER TO DRAWING H-C1.5 FOR KEY NOTES LEGEND.

3 WORKING DAYS BEFORE YOU DIG CALL MISS DIG 1-800-482-7171

Hamtramck Connector

Hamtramck Connector
Detroit, Michigan

MDOT
Michigan Department of Transportation

Owners:

City of Detroit
Traffic Engineering Division

ISSUED FOR	REV	DATE
BIDDING DOCUMENTS	2	MAY.21.2013
BIDDING DOCUMENTS	1	MAY.02.2013
100% CONSTRUCTION DOCUMENTS	0	APR.01.2013

SEALS AND SIGNATURES

KEY PLAN

DRAWING TITLE

PAVING PLANS - ST. AUBIN AVE.

0 5' 10' 20'

GRAPHIC SCALE TAKES PRECEDENCE
FULL SIZE SCALE (24x36) 1"=10'-0"

PROJECT NUMBER

H-C1.2

DRAWING NUMBER

FILE: P:\50565.000\CAD\L\Sheet\Hamtramck\H-C1.2.dwg USER: jgreene DATE: May. 22 2013 TIME: 09:02 am

GRAND BLVD. E.
ST. AUBIN – BRIDGE

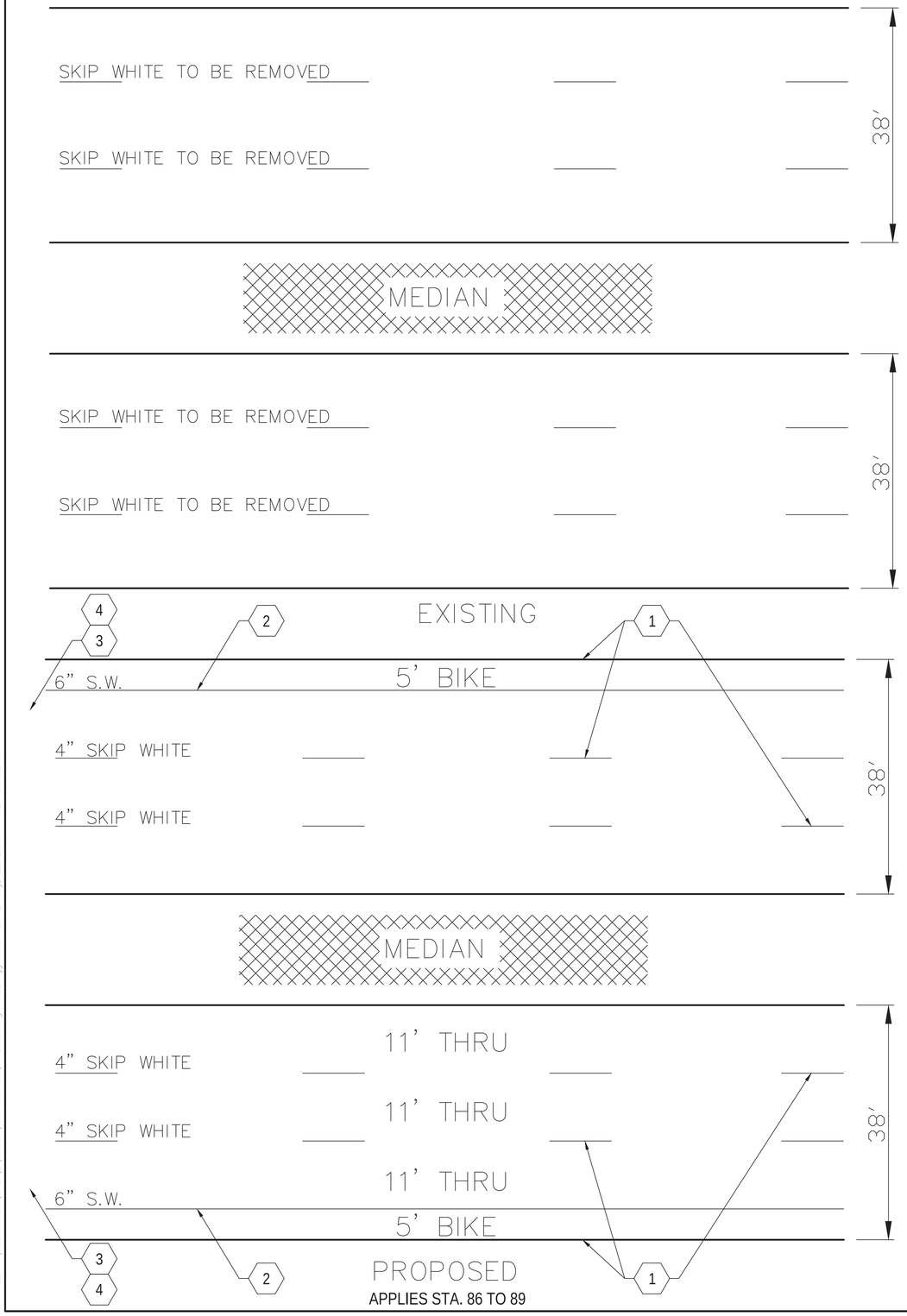

APPLIES STA. 86 TO 89

HAMTRAMCK DR.
BRIDGE – CITY LIMITS

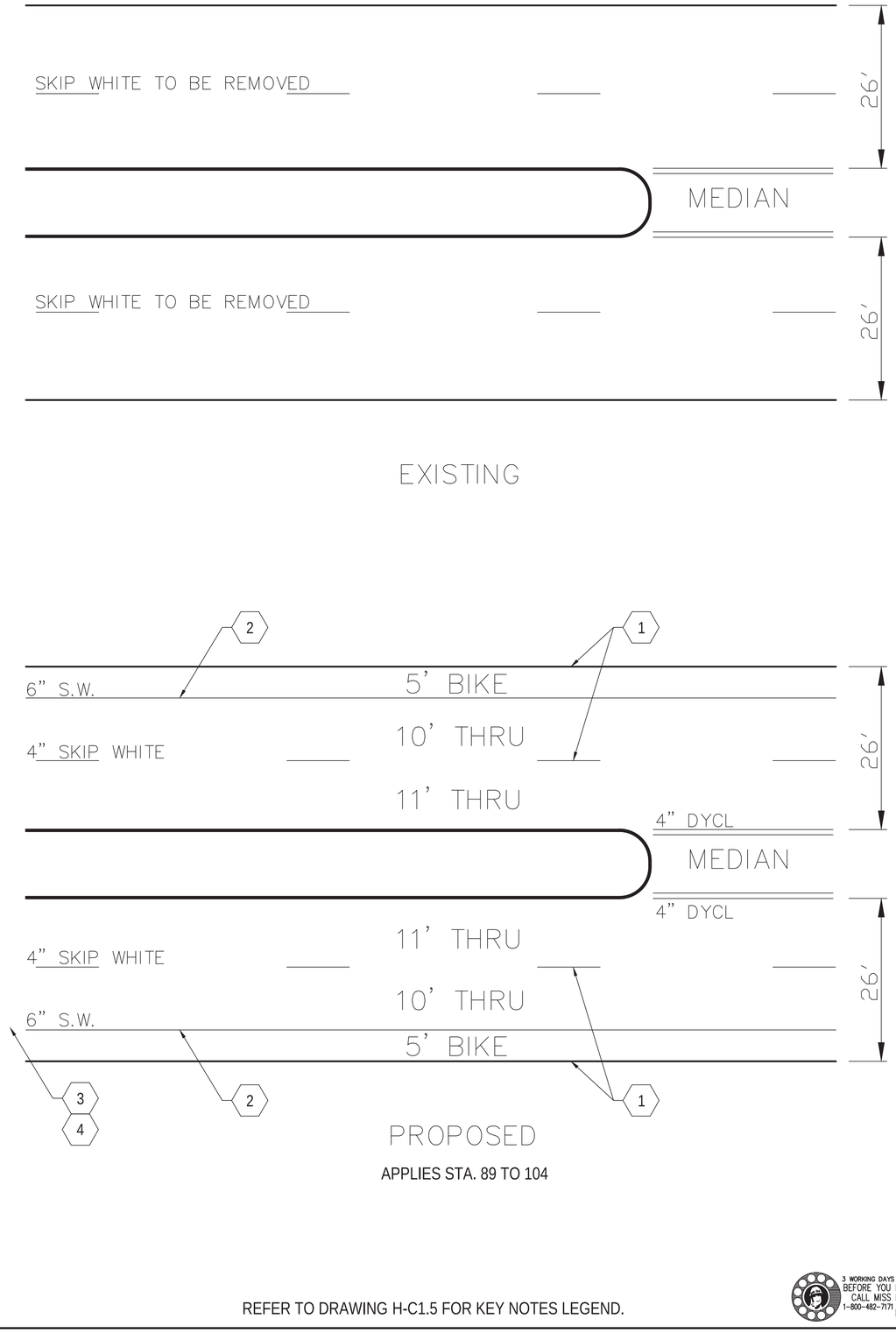

APPLIES STA. 89 TO 104

REFER TO DRAWING H-C1.5 FOR KEY NOTES LEGEND.

3 WORKING DAYS BEFORE YOU DIG CALL MISS DIG 1-800-482-7171

Hamtramck Connector

Hamtramck Connector
Detroit, Michigan

MDOT Michigan Department of Transportation

Owners:

City of Detroit
Traffic Engineering Division

ISSUED FOR	REV	DATE
BIDDING DOCUMENTS	2	MAY.21.2013
BIDDING DOCUMENTS	1	MAY.02.2013
100% CONSTRUCTION DOCUMENTS	0	APR.01.2013

SEALS AND SIGNATURES

KEY PLAN

DRAWING TITLE

PAVING PLANS - GRAND BLVD E. TO HAMTRAMCK DR.

0 5' 10' 20'

GRAPHIC SCALE TAKES PRECEDENCE FULL SIZE SCALE (24x36) 1"=10'-0"

PROJECT NUMBER

H-C1.3

DRAWING NUMBER

FILE:P:\50565.000\CAD\L\Sheet\Hamtramck\H-C1.3.dwg USER:jgreene DATE:May. 22 2013 TIME: 09:02 am

HAMTRAMCK DR.
CITY LIMITS – HAMTRAMCK CITY LIMITS

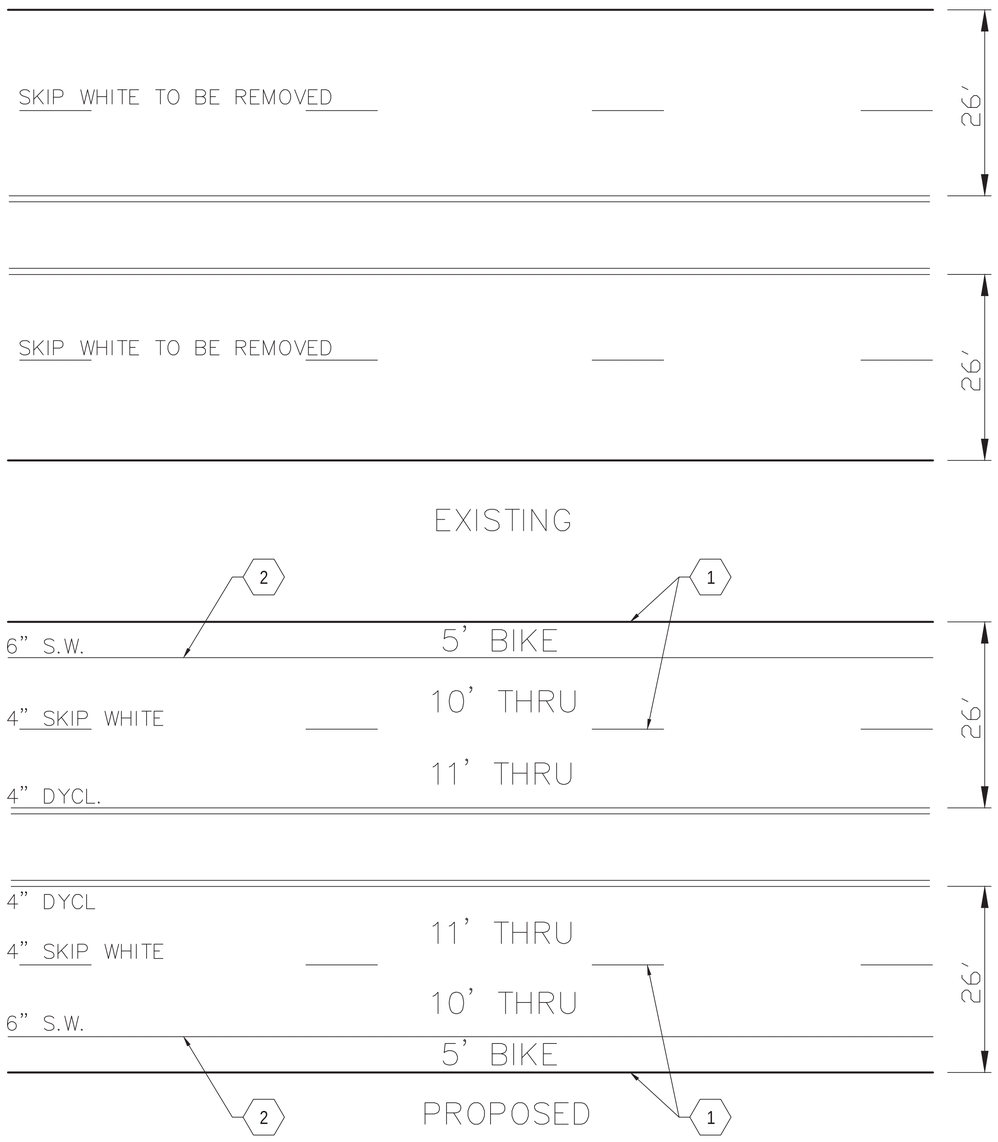

APPLIES: STA. 104 TO 108

HAMTRAMCK DR.
HAMTRAMCK CITY LIMITS – JOSEPH CAMPAU

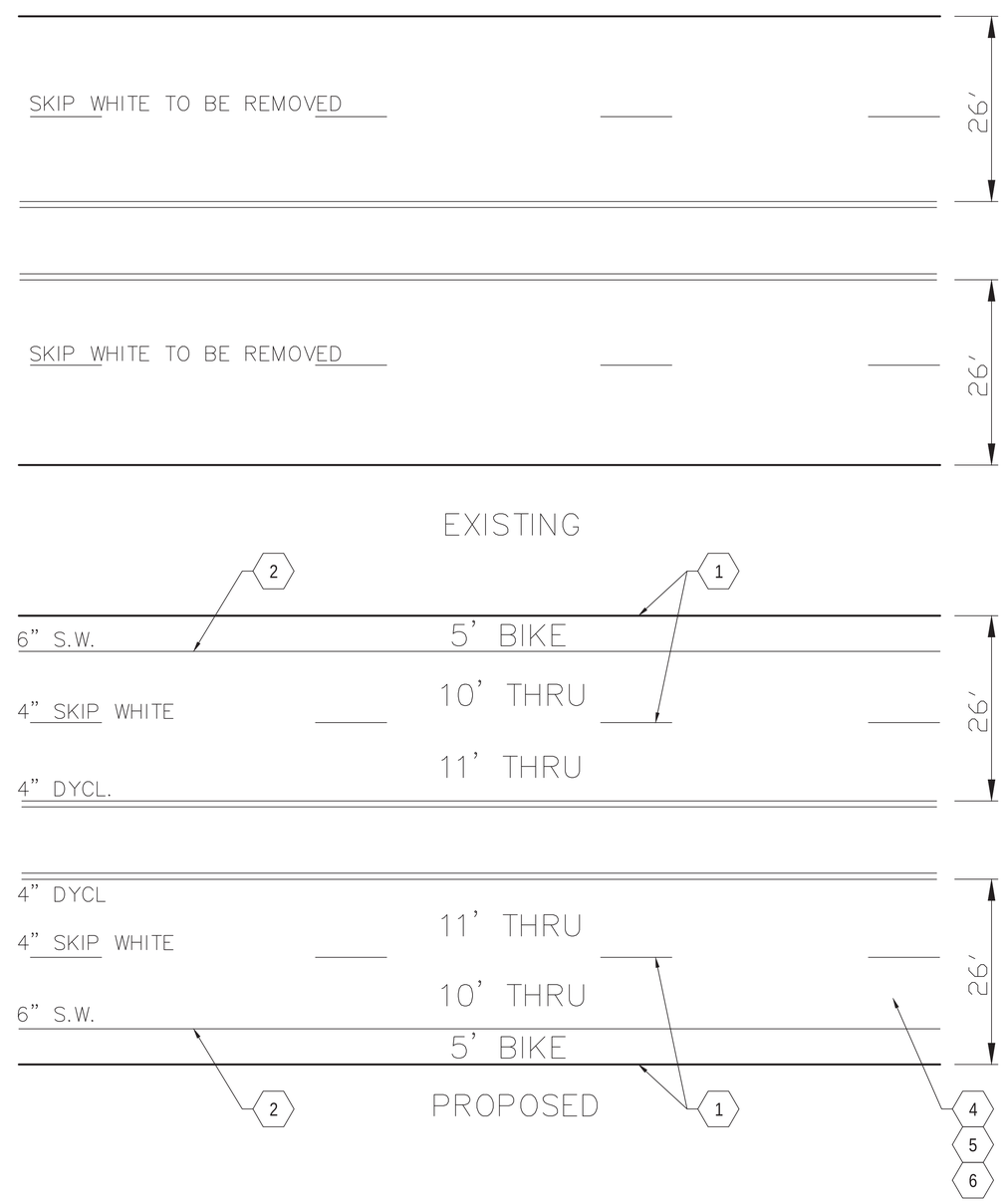

APPLIES: STA. 108 TO 134

REFER TO DRAWING H-C1.5 FOR KEY NOTES LEGEND.

3 WORKING DAYS BEFORE YOU DIG CALL MISS DIG 1-800-482-7171

Hamtramck Connector

Hamtramck Connector
Detroit, Michigan

MDOT
Michigan Department of Transportation

Owners:

City of Detroit
Traffic Engineering Division

ISSUED FOR	REV	DATE
BIDDING DOCUMENTS	2	MAY.21.2013
BIDDING DOCUMENTS	1	MAY.02.2013
100% CONSTRUCTION DOCUMENTS	0	APR.01.2013

SEALS AND SIGNATURES

KEY PLAN

DRAWING TITLE

PAVING PLANS - HAMTRAMCK DR.

0 5' 10' 20'

GRAPHIC SCALE TAKES PRECEDENCE
FULL SIZE SCALE (24x36) 1"=10'-0"

PROJECT NUMBER

H-C1.4

DRAWING NUMBER

FILE:P:\50565.000\CAD\L\Sheet\Hamtramck\H-C1.4.dwg USER:jgreene DATE:May. 22 2013 TIME: 09:02 am

BIKE SYMBOLS AND SIGNS PLACEMENTS STANDARDS

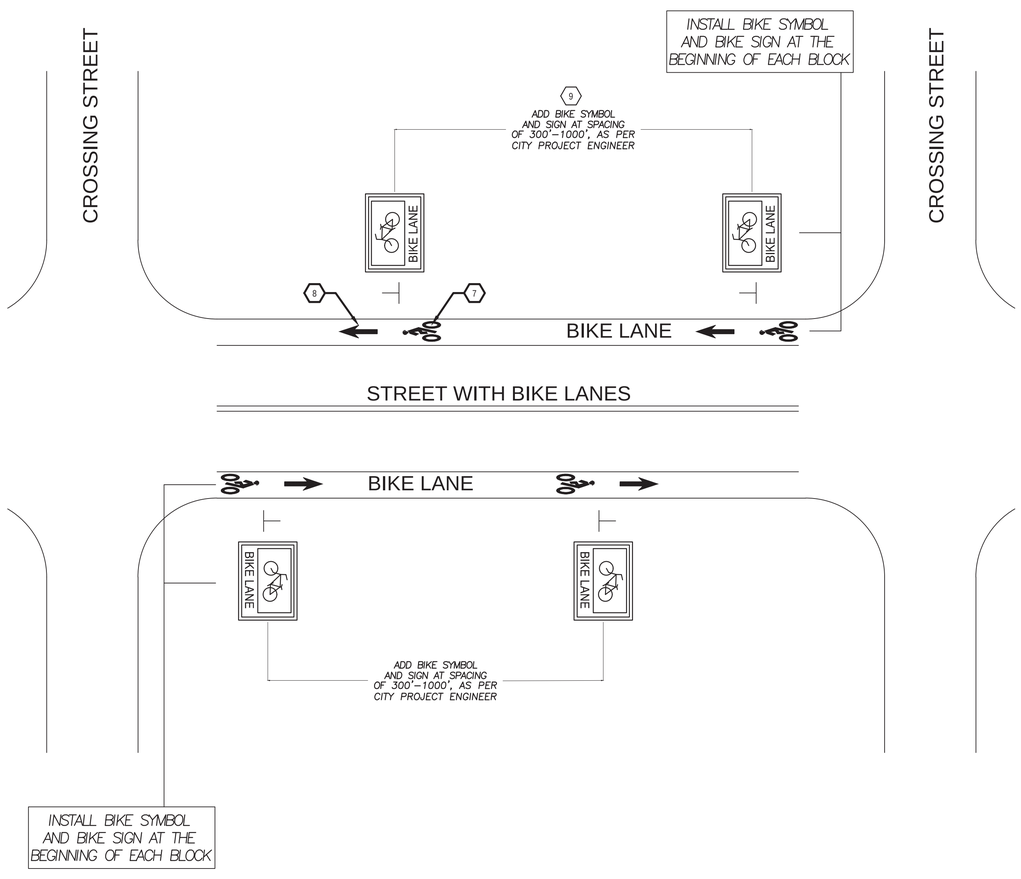

HAMTRAMCK CONNECTOR

PAVING KEY NOTES

1	_PAVT MRKG, SPRAYABLE THERMOPL, 4 INCH, WHITE
2	_PAVT MRKG, SPRAYABLE THERMOPL, 6 INCH, WHITE
3	_PAVT MRKG, OVLY COLD PLASTIC, 12 INCH, CROSSWALK
4	_PAVT MRKG, OVLY COLD PLASTIC, 18 INCH, STOP BAR
5	_PAVT MRKG, OVLY COLD PLASTIC, ONLY
6	_PAVT MRKG, OVLY COLD PLASTIC, LT TURN ARROW SYM
7	_PAVT MRKG, WATERBORNE, BIKE
8	_PAVT MRKG, WATERBORNE, DIRECTIONAL ARROW SYM, BIKE
9	SIGN, TYPE IIIB

3 WORKING DAYS BEFORE YOU DIG CALL MISS DIG 1-800-482-7171

Hamtramck Connector

Hamtramck Connector
Detroit, Michigan

MDOT Michigan Department of Transportation

Owners:

City of Detroit
Traffic Engineering Division

ISSUED FOR	REV	DATE
BIDDING DOCUMENTS	2	MAY.21.2013
BIDDING DOCUMENTS	1	MAY.02.2013
100% CONSTRUCTION DOCUMENTS	0	APR.01.2013

SEALS AND SIGNATURES

KEY PLAN

DRAWING TITLE

DETAILS

GRAPHIC SCALE TAKES PRECEDENCE FULL SIZE SCALE (24x36) NTS

PROJECT NUMBER

DRAWING NUMBER H-C1.5

FILE:P:\50565.000\CAD\L\Sheet\Hamtramck\H-C1.5.dwg USER:jgreene DATE:May. 22 2013 TIME: 09:02 am