CITY OF DETROIT

COLEMAN A. YOUNG — MAYOR

CITY ENGINEERING DEPARTMENT

PLANS FOR PROPOSED

MACK AVENUE IMPROVEMENTS

LEGEND

	EXIST. SANITARY & STORM SEWER
	EXIST. WATER MAIN
	EXIST. GAS
	EXIST. PLD
	EXIST. EDISON
	EXIST. MBT
	PROP. WATER MAIN BY OTHERS
⊙	EXIST. MANHOLE
⊞	EXIST. CATCH BASIN
⊗	EXIST. WATER MANHOLE
	EXIST. FIRE HYDRANT
	EXIST. LIGHT POLE
	EXIST. UTILITY POLE
	EXIST. GUY POLE
	EXIST. TREE
O.H.	INDICATES OVERHEAD LINES

INDEX OF SHEETS

SHEET NO.	DESCRIPTION
	ROAD WORK
R1	COVER SHEET
R2 & R3	TYPICAL ROADWAY CROSS-SECTIONS
R4	ALIGNMENT SHEET
R5 — R7	MACK AVENUE PLANS
R8 — R10	DRAINAGE & CONTOUR PLANS
R11 — R13	PAVEMENT REMOVAL PLANS
R14 — R16	MACK AVENUE PROFILES
R17 — R19	MACK AVENUE DETAILED GRADES AND JOINT LAYOUT
R20	ACCESS DRIVE PROFILE
R21	ACCESS DRIVE DETAILED GRADES AND JOINT LAYOUT
R22 & R22A	TRAFFIC MAINTENANCE PLAN
R23	PAVEMENT MARKING LAYOUT
R24	MISCELLANEOUS DETAILS
	BRIDGE WORK
S1	GENERAL PLAN OF SITE
S2	BORING LOCATION PLAN
S3	STRUCTURE - ELEVATION PLOT OF BORINGS
S4	RETAINING WALLS S1 & N1 - ELEVATION PLOT OF BORINGS
S5	RETAINING WALLS S-2 & N-2 ELEVATION PLOT OF BORINGS
S6 — S10A	GENERAL PLAN OF STRUCTURE
S11 — S13	FOOTING LAYOUT PLAN
S14	ABUTMENT "A"
S15	ABUTMENT "B"
S16	ABUTMENT DETAILS
S17	ABUTMENT WINGWALLS
S18 & S19	RETAINING WALL S-1
S20 & S21	RETAINING WALL N-1
S22 & S23	RETAINING WALL S-2
S24 — S26	RETAINING WALL N-2
S27 & S28	RETAINING WALL DETAILS
S29	PIER 1
S30	PIER 2
S31	PIER 3
S32	PIER 4
S33	PIER DETAILS
S34 — S36	FRAMING PLAN AND BEAM ELEVATIONS
S37	SUPERSTRUCTURE DETAILS
S38	DETAILS AT BEAM CANTILEVER
S39	CAMBER DIAGRAM
S40	BEARING DETAILS
S41	DECK SLAB - SPAN 1
S42	DECK SLAB - SPAN 2
S43	DECK SLAB - SPAN 3
S44	DECK SLAB - 485
S45 & S46	DECK DETAILS
S47	BEAM ELEVATIONS AND DECK POURING SEQUENCE
S48	BEAM ELEVATIONS
S49	SLAB ELEVATIONS AND SCREED ELEVATIONS
S50	STEEL REINFORCEMENT DETAILS
S51	DECK EXPANSION JOINT
	ELECTRICAL WORK
E1 — E40	MACK AVENUE LIGHTING

PROJECT:
JEFFERSON/CONNER INDUSTRIAL REVITALIZATION PROJECT

YEAR 2005
A.D.T. 8300
D.H.V. 830

DESIGN SPEED..... 40M.P.H.

PREPARED UNDER SUPERVISION OF:
REGISTERED PROFESSIONAL ENGINEER
Julian C. Madison, NO. 14065

STATE OF MICHIGAN — JULIAN C. MADISON — ENGINEER — NO. 14065 — REGISTERED PROFESSIONAL ENGINEER

RECOMMENDED FOR APPROVAL — ENGINNER OF INSPECTION — DATE

RECOMMENDED FOR APPROVAL — ENGINEER OF STREETS — DATE

RECOMMENDED FOR APPROVAL — STRUCTURAL ENGINEER — DATE

APPROVED — DATE

APPROVED — DIRECTOR — DATE

MADISON MADISON INTERNATIONAL OF MICHIGAN
in association with
HNTB HOWARD NEEDLES TAMMEN & BERGENDOFF

DATE **SEPTEMBER 3, 1987** | SHEET R1 OF 117 SHEETS

LEGEND
+.34 - REPRESENTS HEIGHT (IN FEET) ABOVE EDGE OF PAVEMENT GRADE AS CALLED FOR ON PLANS

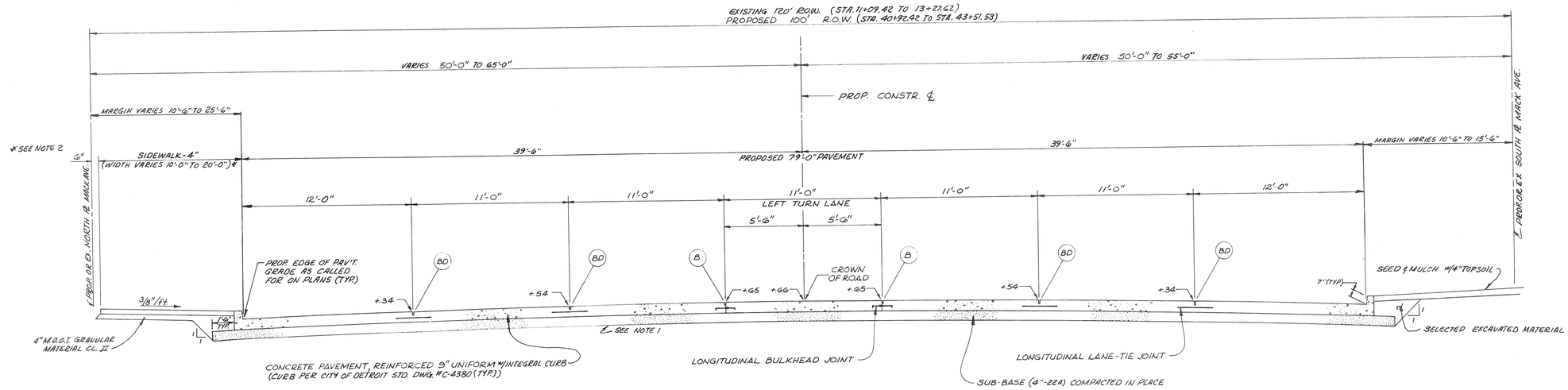

TYPICAL CROSS-SECTION
7 LANE ROADWAY
STA. 11+09.42 TO STA. 13+27.62 & STA. 40+92.42** TO STA. 43+51.58**

** FROM STA. 40+92.42 TO STA. 43+37.01 PAVEMENT IS STRAIGHT SLOPE-TRANSITION FROM FULL SUPERELEVATION

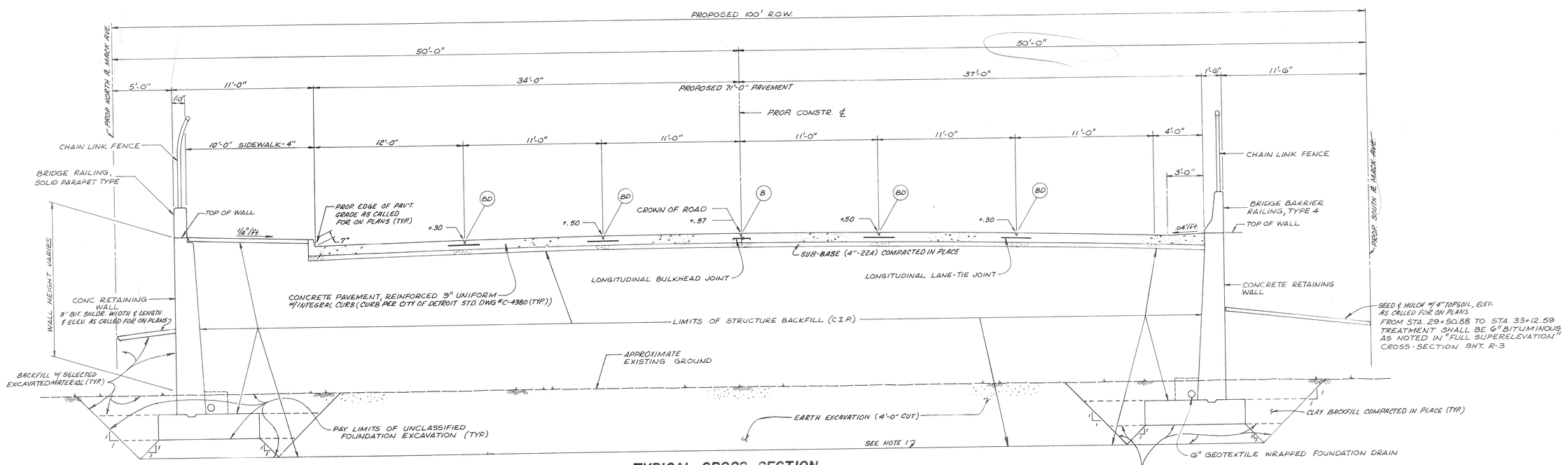

TYPICAL CROSS-SECTION
BRIDGE APPROACH AND DEPARTURE
6 LANE ROADWAY***
STA. 17+51.47 TO STA. 24+51.56 & STA. 29+50.88 TO STA. 33+12.59

*** FROM STA. 23+00 TO STA. 24+51.56 & STA. 29+50.88 TO STA. 31+00 PAVEMENT TYPE SHALL BE BITUMINOUS SEE TYPICAL CROSS-SECTION FOR BITUMINOUS PAV'T (SHT. R-3). FROM STA. 29+50.88 TO STA. 33+12.59 PAV'T. IS STRAIGHT SLOPE-TRANSITION TO FULL SUPERELEVATION

NOTES:
1. IF UNSUITABLE MATERIALS ARE ENCOUNTERED AT REQUIRED SUBGRADE ELEVATION, CARRY EXCAVATIONS DEEPER & REPLACE EXCAVATED MATERIAL AS DIRECTED BY THE ENGINEER.
2. 20'-0" WIDE SIDEWALK SHALL BE SLOPED TO MATCH EX. WALK (3/8"/FT.±).
3. UNSUITABLE MATERIAL UNDER FOOTINGS WILL BE REMOVED AS DIRECTED BY THE ENGINEER. IF THE DEPTH OF MATERIAL REMOVED IS 1'-0" OR LESS IT SHALL BE REPLACED WITH SUBFOOTING CONCRETE. FOR DEPTHS GREATER THAN 1'-0" THE REPLACEMENT MATERIAL SHALL BE STRUCTURE EMBANKMENT.

REVISIONS LOCATED BY COORDINATES ON SHEET							REFERENCE DRAWINGS	DESIGNED BY	K.C.H./M.E.L.
COOR'D	DESCRIPTION	DR'N	CK'D	AP'VD	DATE			DRAWN BY	K.C.H./L.S.
								TRACED BY	
								CHECKED BY	B.P.

CITY OF DETROIT
JEFFERSON/CONNER INDUSTRIAL REVITALIZATION PROJECT
— MACK AVENUE IMPROVEMENTS —

STATE OF MICHIGAN — JULIAN C. MADISON — ENGINEER — No. 14065 — REGISTERED PROFESSIONAL ENGINEER

MADISON MADISON INTERNATIONAL OF MICHIGAN
in association with
HNTB HOWARD NEEDLES TAMMEN & BERGENDOFF

TYPICAL CROSS-SECTIONS

SHEET R2 OF 117 SHEETS
JOB NO. 8627
SCALE: 1/4"=1'-0"
DATE SEPT. 3, 1987

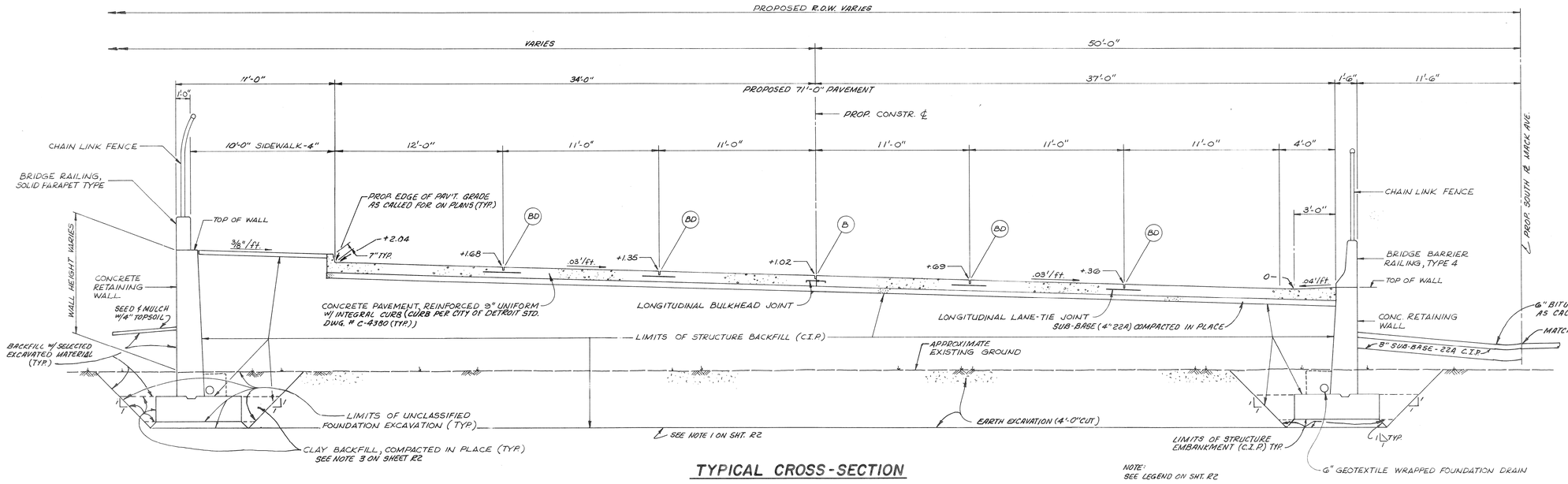

TYPICAL CROSS-SECTION
FULL SUPERELEVATION
6 LANE ROADWAY
STA. 33+12.59 TO STA. 39+71.87

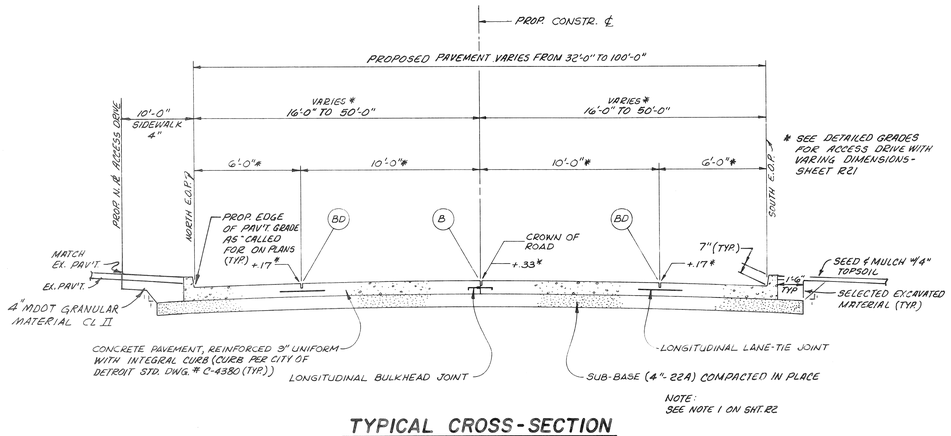

TYPICAL CROSS-SECTION
ACCESS DRIVE
STA. 0+00.00 TO STA. 5+54.99

BITUMINOUS APPLICATION CHART					
USE	ITEM	RATE OF APPLICATION (LBS/SY)	EST. THICKNESS (INCHES)	ASPHALT PENETRATION	AGGREGATE WEAR INDEX
BITUMINOUS PAVEMENT	MDOT BITUMINOUS MIXTURE NO. 1100T, 20AA	140	1-1/2	85-100	290
	MDOT BITUMINOUS MIXTURE NO. 1100L, 20AA	160	1-1/2	85-100	—
BITUMINOUS SHOULDER	MDOT BITUMINOUS MIXTURE NO. 1500T, 20AAA	140	1-1/2	85-100	220
	MDOT BITUMINOUS MIXTURE NO. 1500L, 20AAA	170	1-1/2	85-100	—
TEMP. (ROAD) BITUMINOUS PAVEMENT	MDOT BITUMINOUS MIXTURE NO. 1100T, 20AA	140	1-1/2	85-100	290
	MDOT BITUMINOUS MIXTURE NO. 1100L, 20AA	160	1-1/2	85-100	—
BIT. BASE	MDOT BITUMINOUS MIXTURE NO. 700, 20C	330	3	85-100	—

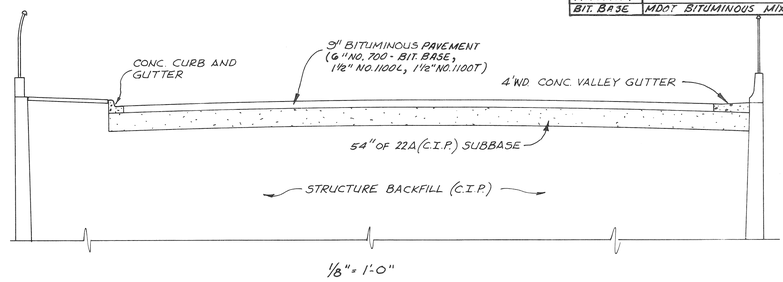

TYPICAL CROSS-SECTION FOR BITUMINOUS PAVEMENT
STA. 23+00 TO STA. 24+51.56 & STA. 29+50.88* TO STA. 31+00*

*PAVEMENT IS STRAIGHT SLOPE - BEGINNING TRANSITION TO FULL SUPERELEVATION FOR TYPICAL CROSS-SECTION FOR SOIL MOUNDING SEE SHEET R-24

REVISIONS LOCATED BY COORDINATES ON SHEET							REFERENCE DRAWINGS	DESIGNED BY	K.C.H./M.E.L.
COOR'D	DESCRIPTION	DR'N	CK'D	AP'VD	DATE			DRAWN BY	K.C.H./L.S.
								TRACED BY	
								CHECKED BY	B.P.

CITY OF DETROIT
JEFFERSON/CONNER INDUSTRIAL REVITALIZATION PROJECT
— MACK AVENUE IMPROVEMENTS —

STATE OF MICHIGAN — JULIAN C. MADISON — ENGINEER — No. 14065 — REGISTERED PROFESSIONAL ENGINEER

MADISON MADISON INTERNATIONAL OF MICHIGAN
in association with
HNTB HOWARD NEEDLES TAMMEN & BERGENDOFF

TYPICAL CROSS-SECTIONS

SHEET R3 OF 117 SHEETS
JOB NO. 8627
SCALE: 1/4"=1'-0"
DATE SEPT. 3, 1987

CURVE DATA - S. R.O.W. LINE

CURVE NO. 14 - S. R.O.W. LINE MACK AVE.
Δ=04°01'22"
D=02°02'07"
R=2815.00'
L=197.64'
T=98.86'
C=197.60'
M=1.73'
E=1.74'

CURVE NO. 15 S.R.O.W. LINE MACK AVE.
Δ=33°34'06"
D=04°08'40"
R=1382.50'
L=809.98'
T=416.98'
C=798.44'
M=58.90'
E=61.52'

LEGEND

- EXISTING COORDINATE POINT
- PROPOSED COORDINATE POINT
- CURVE NUMBER

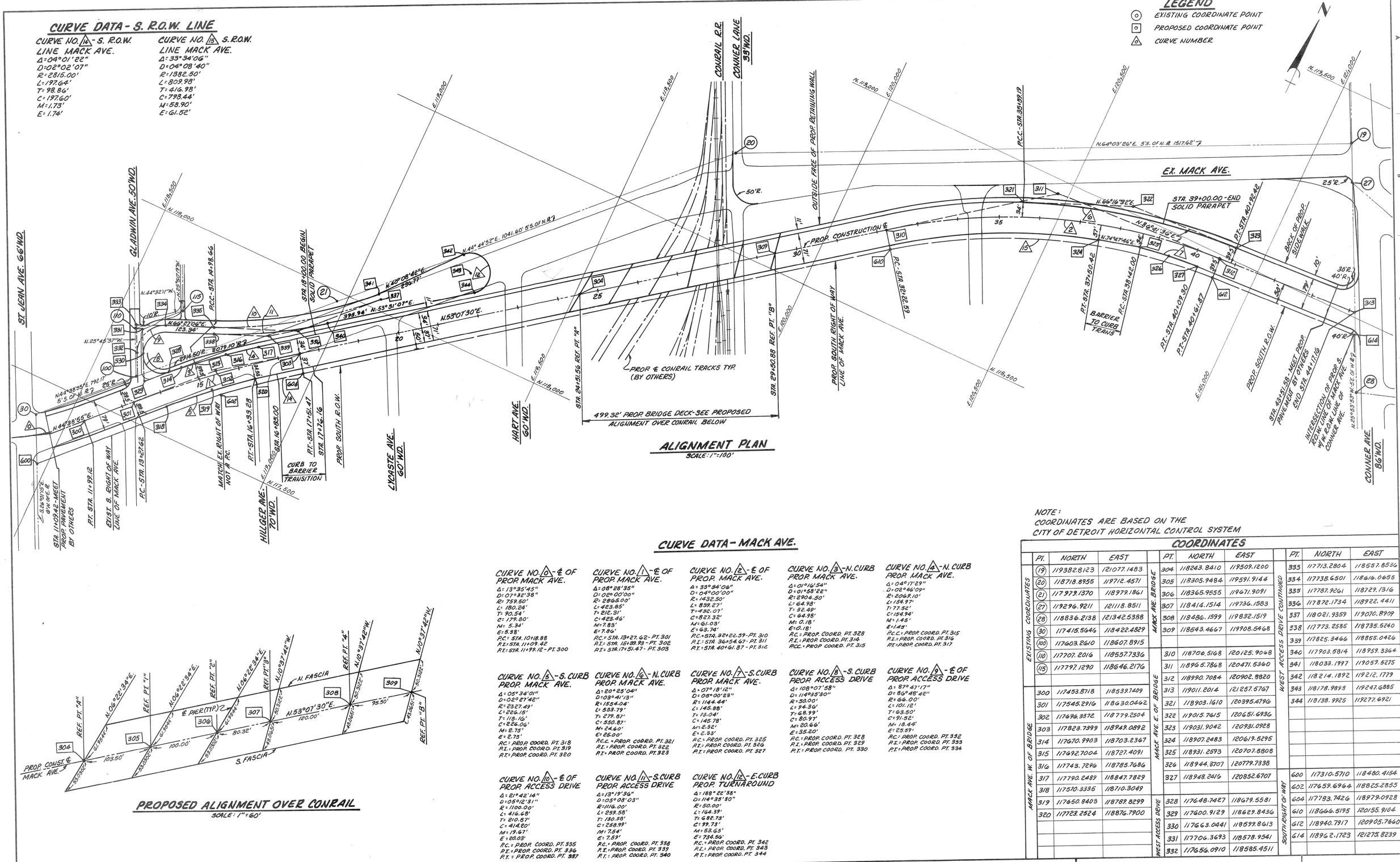

ALIGNMENT PLAN
SCALE: 1"=100'

PROPOSED ALIGNMENT OVER CONRAIL
SCALE: 1"=60'

CURVE DATA - MACK AVE.

CURVE NO. 0 - ℄ OF PROP. MACK AVE.
Δ=13°35'45"
D=07°32'38"
R=759.50'
L=180.24'
T=90.54'
C=179.80'
M=5.34'
E=5.38'
P.C.=STA. 10+18.88
P.I.=STA. 11+09.42
P.T.=STA. 11+99.12 - P.T. 300

CURVE NO. 1 - ℄ OF PROP. MACK AVE.
Δ=08°28'36"
D=02°00'00"
R=2865.00'
L=423.85'
T=212.31'
C=423.46'
M=7.83'
E=7.86'
P.C.=STA. 13+27.62 - P.T. 301
P.I.=STA. 15+39.93 - P.T. 302
P.T.=STA. 17+51.47 - P.T. 303

CURVE NO. 2 - ℄ OF PROP. MACK AVE.
Δ=33°34'06"
D=04°00'00"
R=1432.50'
L=839.27'
T=432.07'
C=827.32'
M=61.03'
E=63.14'
P.C.=STA. 8+70.32+22.59 - P.T. 310
P.I.=STA. 36+54.67 - P.T. 311
P.T.=STA. 40+61.87 - P.T. 312

CURVE NO. 3 - N. CURB PROP. MACK AVE.
Δ=01°16'54"
D=01°58'22"
R=2904.50'
L=64.98'
T=32.49'
C=64.98'
M=0.18'
E=0.18'
P.C.=PROP. COORD. PT. 328
P.I.=PROP. COORD. PT. 314
PCC.=PROP. COORD. PT. 315

CURVE NO. 4 - N. CURB PROP. MACK AVE.
Δ=04°17'29"
D=02°46'09"
R=2069.10'
L=154.97'
T=77.52'
C=154.94'
M=1.45'
E=1.49'
P.C.C.=PROP. COORD. PT. 315
P.I.=PROP. COORD. PT. 316
PT.=PROP. COORD. PT. 317

CURVE NO. 5 - S. CURB PROP. MACK AVE.
Δ=05°34'01"
D=02°27'42"
R=2327.49'
L=226.15'
T=113.16'
C=226.06'
M=2.78'
E=2.75'
P.C.=PROP. COORD. PT. 318
P.I.=PROP. COORD. PT. 319
P.T.=PROP. COORD. PT. 320

CURVE NO. 6 - N. CURB PROP. MACK AVE.
Δ=20°25'04"
D=03°41'13"
R=1554.04'
L=553.79'
T=279.87'
C=550.83'
M=24.60'
E=25.00'
P.C.=PROP. COORD. PT. 321
P.I.=PROP. COORD. PT. 322
P.T.=PROP. COORD. PT. 323

CURVE NO. 7 - S. CURB PROP. MACK AVE.
Δ=07°18'12"
D=05°00'28"
R=1144.44'
L=145.88'
T=73.04'
C=145.78'
M=2.32'
E=2.33'
P.C.=PROP. COORD. PT. 325
P.I.=PROP. COORD. PT. 326
P.T.=PROP. COORD. PT. 327

CURVE NO. 8 - S. CURB PROP. ACCESS DRIVE
Δ=108°07'58"
D=114°35'30"
R=50.00'
L=94.36'
T=63.99'
C=80.97'
M=20.66'
E=35.20'
P.C.=PROP. COORD. PT. 328
P.I.=PROP. COORD. PT. 329
P.T.=PROP. COORD. PT. 330

CURVE NO. 9 - ℄ OF PROP. ACCESS DRIVE
Δ=87°47'17"
D=89°48'46"
E=66.00'
L=101.12'
T=63.50'
C=91.52'
M=18.44'
E=25.59'
P.C.=PROP. COORD. PT. 332
P.I.=PROP. COORD. PT. 333
P.T.=PROP. COORD. PT. 334

CURVE NO. 10 - ℄ OF PROP. ACCESS DRIVE
Δ=21°42'14"
D=05°12'31"
R=1100.00'
L=416.68'
T=210.87'
C=414.20'
M=19.67'
E=20.03'
P.C.=PROP. COORD. PT. 335
P.I.=PROP. COORD. PT. 336
P.T.=PROP. COORD. PT. 337

CURVE NO. 11 - S. CURB PROP. ACCESS DRIVE
Δ=13°19'36"
D=05°08'03"
R=1116.00'
L=259.58'
T=130.38'
C=258.99'
M=7.54'
E=7.53'
P.C.=PROP. COORD. PT. 338
P.I.=PROP. COORD. PT. 339
P.T.=PROP. COORD. PT. 340

CURVE NO. 12 - E. CURB PROP. TURNAROUND
Δ=188°22'38"
D=114°35'30"
R=50.00'
L=164.39'
T=685.73'
C=99.73'
M=53.65'
E=734.56'
P.C.=PROP. COORD. PT. 342
P.I.=PROP. COORD. PT. 343
P.T.=PROP. COORD. PT. 344

NOTE:
COORDINATES ARE BASED ON THE CITY OF DETROIT HORIZONTAL CONTROL SYSTEM

COORDINATES

EXISTING COORDINATES

PT.	NORTH	EAST
(19)	119382.8123	121077.1483
(20)	118718.8955	119712.4571
(21)	117979.1370	118979.1861
(27)	119296.9211	121118.8511
(28)	118836.2138	121342.5388
(30)	117415.5646	118422.4829
(100)	117603.2610	118607.8915
(110)	117707.2016	118557.7336
(115)	117797.1290	118646.2176

MACK AVE. W. OF BRIDGE

PT.	NORTH	EAST
300	117453.8718	118539.7409
301	117545.2916	118630.0442
302	117696.3372	118779.2504
303	117828.7399	118949.0892
314	117670.9903	118703.2367
315	117692.7004	118727.4091
316	117743.7296	118785.7686
317	117790.2489	118847.7829
318	117570.3335	118710.3049
319	117650.8403	118769.8299
320	117723.2524	118876.7900

MACK AVE. E. OF BRIDGE

PT.	NORTH	EAST
304	118243.8410	119509.1200
305	118305.9484	119591.9144
306	118365.9555	119671.9091
307	118414.1514	119736.1583
308	118486.1599	119832.1519
309	118543.4667	119908.5468
310	118706.5168	120125.9068
311	118965.7868	120471.5360
312	118990.7084	120902.8820
313	119011.2014	121257.5767
321	118903.1610	120395.4796
322	119015.7615	120651.6936
323	119031.9042	120931.0928
324	118907.2483	120619.5295
325	118931.2593	120707.8808
326	118944.3707	120779.7338
327	118948.2416	120852.6707

MACK AVE. BRIDGE

PT.	NORTH	EAST
333	117713.2804	118557.8536
334	117738.6501	118616.0656
335	117787.9261	118729.1316
336	117872.1734	118922.4411
337	118021.9359	119070.8909
338	117773.2585	118735.5240
339	117825.3466	118855.0426
340	117903.5814	118959.3364
341	118033.1997	119059.5275
342	118214.1892	119212.1779
343	118178.9893	119247.6885
344	118138.9925	119277.6921

WEST ACCESS DRIVE

PT.	NORTH	EAST
328	117648.7427	118679.5581
329	117600.9129	118629.8436
330	117663.0441	118539.8613
331	117706.3693	118578.9541
332	117656.0910	118585.4511

SOUTH RIGHT OF WAY

PT.	NORTH	EAST
600	117310.5710	118480.4154
602	117659.6964	118825.2855
604	117783.7426	118979.0928
610	118666.5195	120155.9104
612	118940.7917	120905.7660
614	118962.1723	121275.8239

COOR'D	DESCRIPTION	DR'N	CK'D	AP'VD	DATE
REVISIONS LOCATED BY COORDINATES ON SHEET					

REFERENCE DRAWINGS

DESIGNED BY M.E.L.
DRAWN BY L.S.
TRACED BY
CHECKED BY B.P.

CITY OF DETROIT
JEFFERSON/CONNER INDUSTRIAL REVITALIZATION PROJECT
— MACK AVENUE IMPROVEMENTS —

STATE OF MICHIGAN — REGISTERED PROFESSIONAL ENGINEER — JULIAN C. JACKSON — No. 14065

MADISON MADISON INTERNATIONAL OF MICHIGAN
in association with
HNTB HOWARD NEEDLES TAMMEN & BERGENDOFF

ALIGNMENT SHEET

SHEET R4 OF 117 SHEETS
JOB NO. 8627
SCALE: AS NOTED
DATE SEPT. 3, 1987

BENCH MARK DATA

B.M. 55-1 ELEV. 121.00
ARROW ON HYDRANT, NW CORNER OF ST. JEAN AND MACK AVE.

B.M. 55-2 ELEV. 119.74
ARROW ON HYDRANT, NORTH SIDE OF MACK AVE. AT HILLGER AVE.

B.M. 55-3 ELEV. 119.82
ARROW ON HYDRANT, NORTH SIDE OF MACK AVE. AT LYCASTE AVE.

ST. JEAN AVE. 66' WD.
GLADWIN AVE. 50' WD.
PROP. 20' WIDE CONC. WALK (4" THICK) MEET EXIST. WALK
5+5' TREE WELLS (4-REG'D.) W/ TREE GRATE NEEMHA # BG42 - 180° SQ.
MEET EXIST. PAV'T.
PROP. 8' WIDE CONC. WALK (4" THICK) MEET EX. WALK
PROP. 5' WIDE CONC. WALK (4" THICK) MEET EXIST. WALK
PROP. CONC. WALK (4" THICK)
WIDTH VARIES
EX. FIRE HYD. TO BE RELOCATED 50' N.
MEET EXIST. PAV'T.
SEED & MULCH AREA BETWEEN WALK OF MACK AVE. & CURB OF ACCESS DRIVE FROM E. WALK OF GLADWIN TO STA. 18+00.00
EX. FIRE HYDRANT TO REMAIN
RELOCATE EX. SIAMESE CONNECTION AND GUARD POSTS 70' N.W.
REMOVE EX. TREE
B.M. 55-2
PROP. 10' WIDE CONC. WALK (4" THICK)
PROP. 10' WIDE CONC. WALK (4" THICK)
& PROP. WEST ACCESS DRIVE
REMOVE EXISTING FENCE
PROP. 6' HIGH CHAIN LINK FENCE W/ 3 STRANDS OF BARBED WIRE - 5' NORTH OF PROP. WALK
REMOVE "A" OF EX. WALL
PROP. 10' WIDE CONC. WALK (4" THICK)
STA. 18+00.00 - BEGIN SOLID BITUMINOUS SHOULDER BETWEEN PARAPET & S. CURB OF PROP. ACCESS DRIVE - SEE DETAIL SHT. R24
EXIST. FIRE HYDRANT TO BE RELOCATED 20' NORTH
REMOVE & REPLACE EXISTING DRIVE
B.M. 55-3
EXIST. FIRE HYDRANT TO REMAIN
ENCASE EXISTING 36" W.M. IN CONCRETE FROM STA. 19+30 TO STA. 20+25 - SEE DETAIL SHT. R24
PROPOSED 3" BITUMINOUS SHOULDER SEE DETAIL SHEET R24
EXISTING UTILITY TO BE RELOCATED UNDER SEPARATE CONTRACT BY OTHERS
MATCH LINE SEE SHEET R6
PROP. 36" W.M. BY OTHERS
P.C.C. - STA. 14+98.66
PROP. CONST. ℄
STA. 11+09.42 - MEET PROP. PAVEMENT BY OTHERS
INSTALL 16'-10"x6" BUS SHELTER CONC. PAD 34' FROM PROP. END OF RADIUS AND 10' WIDE CONC. WALK 14" THK.) TO WEST
FOR PROP. PLD SEE SHEETS E1-E2
STA. 11+99.12
P.C. - STA. 13+27.62
SEE SHEET R1 FOR UTILITY LEGEND
PROP. 30' CONSTRUCTION EASEMENT W/ TEMPORARY FENCE
EXIST. FIRE HYDRANT TO BE RELOCATED & RECONNECT TO EX. W.M.
HILLGER AVE. 70' WD.
P.T. - STA. 16+33.28
STA. 16+85.00
P.T. - STA. 17+51.47
STA. 17+76.16
CURB TO BARRIER TRANSITION SEE DETAIL SHEET R24
LYCASTE AVE. 60' WD.
EXIST. FIRE HYDRANT TO BE ABANDONED
PROP. S. R.O.W. LINE

GENERAL NOTES

1. EXISTING UTILITIES IN GLADWIN, LYCASTE, HILLGER & HART SOUTH OF EXISTING MACK SOUTH R.O.W. ARE ABANDONED. EXISTING UTILITIES IN MACK AVE. SHALL BE PROTECTED AND REMAIN IN SERVICE.
2. ALL EXISTING STORM & SANITARY SEWER MANHOLE COVERS PLUS ALL PLD STRUCTURE COVERS THAT WILL REMAIN IN SERVICE FROM STA. 11+09.42 TO STA. 22+00 SHALL BE RAISED OR LOWERED TO MATCH PROPOSED PAVEMENT ELEVATIONS.
3. IF ANY EXISTING ITEM AND/OR CONDITION THAT IS TO REMAIN BECOMES DAMAGED DURING THE CONSTRUCTION OPERATION THE CONTRACTOR SHALL REPLACE THAT ITEM AND/OR CONDITION 'IN KIND' AT HIS OWN EXPENSE.

NOTE:
FOR MACK AVE. PROFILE FOR THIS SHEET SEE SHEET R14
FOR DRAINAGE & CONTOUR PLANS FOR THIS SHEET SEE SHEET R8
FOR PAVEMENT REMOVAL PLAN FOR THIS SHEET SEE SHEET R11
FOR DETAILED GRADES FOR THIS SHEET SEE SHEET R17
FOR ACCESS DRIVE PROFILE SEE SHEET R20
FOR ACCESS DRIVE DETAILED GRADES SEE SHEET R21
FOR SIDEWALK JOINTING SEE CITY OF DETROIT STD. DWG. # C-4462

COORD	DESCRIPTION	DR'N	CK'D	AP'VD	DATE
REVISIONS LOCATED BY COORDINATES ON SHEET					

REFERENCE DRAWINGS

DESIGNED BY	M.E.L.
DRAWN BY	L.S.
TRACED BY	
CHECKED BY	B.P.

CITY OF DETROIT
JEFFERSON/CONNER INDUSTRIAL REVITALIZATION PROJECT
— MACK AVENUE IMPROVEMENTS —

STATE OF MICHIGAN — KEVIN C. MADISON KELLWELLER — No. 14065 — REGISTERED PROFESSIONAL ENGINEER

MADISON MADISON INTERNATIONAL OF MICHIGAN
in association with
HNTB HOWARD NEEDLES TAMMEN & BERGENDOFF

MACK AVENUE PLAN FROM STA. 11+09.42 TO STA. 22+00

SHEET R5 OF 117 SHEETS
JOB NO. 8627
SCALE: 1" = 40'
DATE SEPT. 3, 1987

BENCH MARK DATA

B.M. 55-4 ELEV. 115.87
MARKER SQ. ON LIGHT POLE BASE, NORTH SIDE OF MACK AVE. EAST OF CONRAIL.

B.M. 55-5 ELEV. 116.29
ARROW ON END. HYDRANT EAST OF CONRAIL ON NORTH SIDE OF MACK AVE.

B.M. 56-256 ELEV. 113.72
BRASS CAP UNDER A HAND HOLE IN THE SIDEWALK @ THE SE. COR. OF MACK AVE. & CONNER LANE.

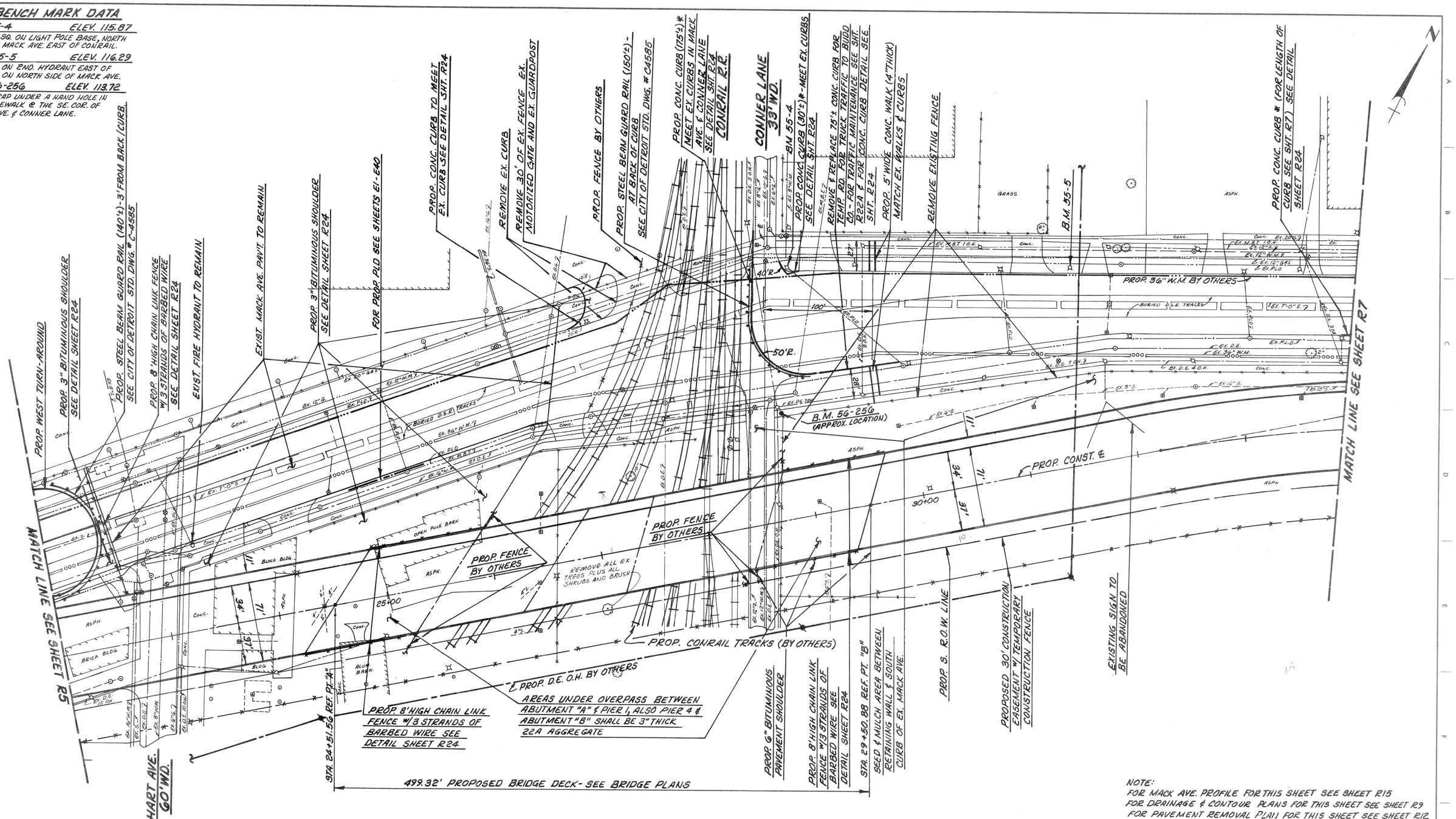

NOTE:
FOR MACK AVE. PROFILE FOR THIS SHEET SEE SHEET R15
FOR DRAINAGE & CONTOUR PLANS FOR THIS SHEET SEE SHEET R9
FOR PAVEMENT REMOVAL PLAN FOR THIS SHEET SEE SHEET R12
FOR DETAILED GRADES FOR THIS SHEET SEE SHEET R18
FOR ACCESS DRIVE PROFILE SEE SHEET R20
FOR ACCESS DRIVE DETAILED GRADES SEE SHEET R21
FOR SIDEWALK JOINTING SEE CITY OF DETROIT STD. DWG. # C-4462
* SEE NOTE 6 ON SHEET R11

SEE SHEET R1 FOR UTILITY LEGEND

COOR'D	DESCRIPTION	DR'N	CK'D	AP'VD	DATE
REVISIONS LOCATED BY COORDINATES ON SHEET					

REFERENCE DRAWINGS

DESIGNED BY	M.E.L.
DRAWN BY	L.S.
TRACED BY	
CHECKED BY	B.P.

CITY OF DETROIT
JEFFERSON/CONNER INDUSTRIAL REVITALIZATION PROJECT
— MACK AVENUE IMPROVEMENTS —

REGISTERED STATE OF MICHIGAN — JULIAN C. MADISON — ENGINEER — P.E. — LIC. 14065 — PROFESSIONAL ENGINEER

MADISON MADISON INTERNATIONAL OF MICHIGAN
in association with
HNTB HOWARD NEEDLES TAMMEN & BERGENDOFF

MACK AVENUE PLAN FROM STA. 22+00 TO STA. 33+90

SHEET R6 OF 117 SHEETS
JOB NO. 8627
SCALE: 1" = 40'
DATE SEPT. 3, 1987

BENCH MARK DATA

B.M. 56-1 ELEV. 114.25
ARROW ON HYDRANT WEST OF CONNER AVE. ON NORTH SIDE OF MACK AVE. (END. HYD. W.)

B.M. 56-256A ELEV. 112.27
BRASS CAP UNDER A HAND HOLE IN THE SIDEWALK ON THE NORTH SIDE OF MACK AVE. 820' E. OF CONNER LANE.

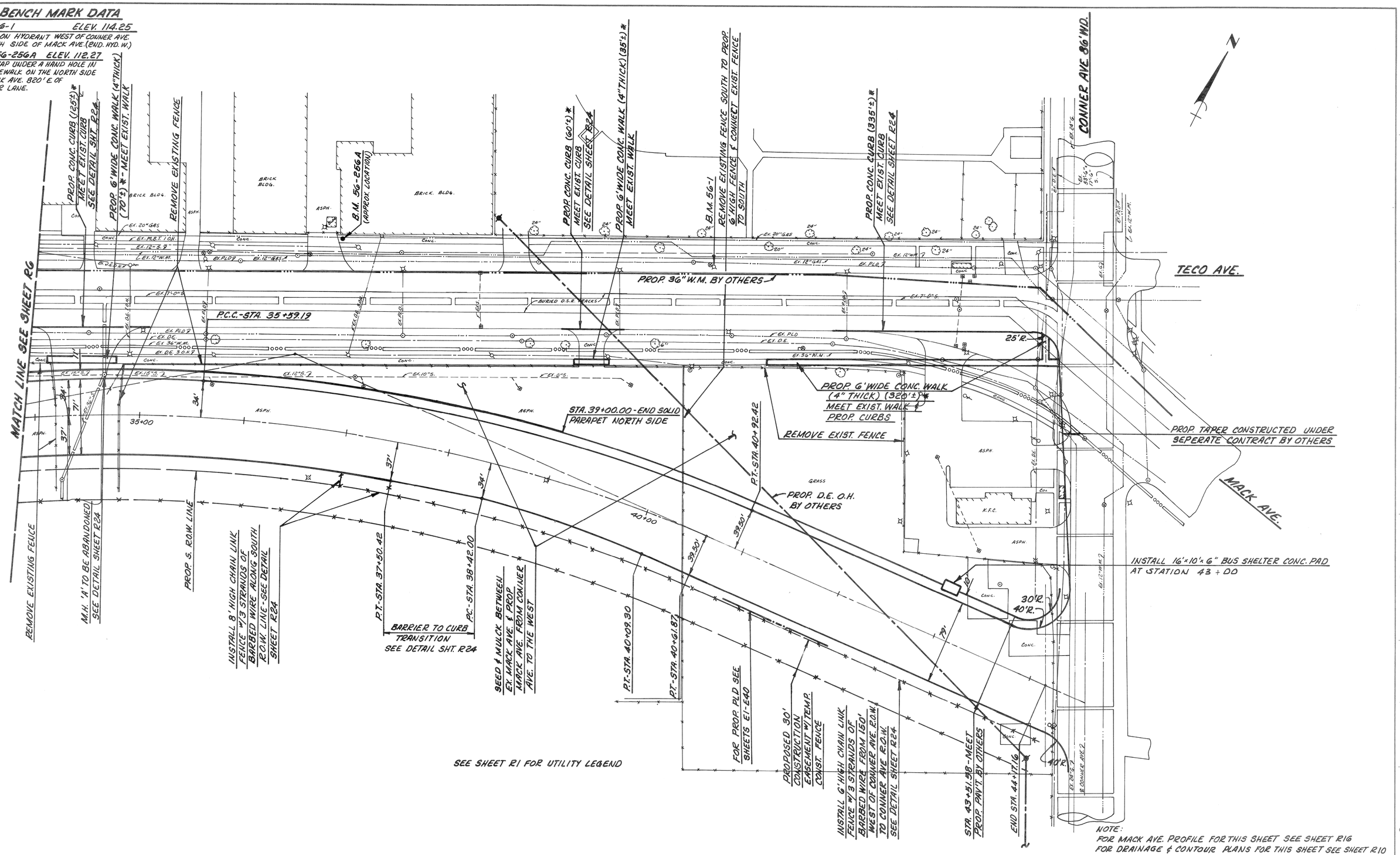

SEE SHEET R1 FOR UTILITY LEGEND

NOTE:
FOR MACK AVE. PROFILE FOR THIS SHEET SEE SHEET R16
FOR DRAINAGE & CONTOUR PLANS FOR THIS SHEET SEE SHEET R10
FOR PAVEMENT REMOVAL PLAN FOR THIS SHEET SEE SHEET R13
FOR DETAILED GRADES FOR THIS SHEET SEE SHEET R19
FOR SIDEWALK JOINTING SEE CITY OF DETROIT STD. DWG. # C-4462
* SEE NOTE 6 SHEET R11

COOR'D	DESCRIPTION	DR'N	CK'D	APV'D	DATE
REVISIONS LOCATED BY COORDINATES ON SHEET					

REFERENCE DRAWINGS

DESIGNED BY M.E.L.
DRAWN BY L.S.
TRACED BY
CHECKED BY B.P.

CITY OF DETROIT
JEFFERSON/CONNER INDUSTRIAL REVITALIZATION PROJECT
— MACK AVENUE IMPROVEMENTS —

REGISTERED STATE OF MICHIGAN PROFESSIONAL ENGINEER
JULIAN C. MADISON
ENGINEER
No. 14065

MADISON MADISON INTERNATIONAL OF MICHIGAN
in association with
HNTB HOWARD NEEDLES TAMMEN & BERGENDOFF

MACK AVENUE PLAN FROM STA. 33+90 TO STA. 43+51.58

SHEET R7 OF 117 SHEETS
JOB NO. 8627
SCALE: 1"= 40'
DATE SEPT. 3, 1987

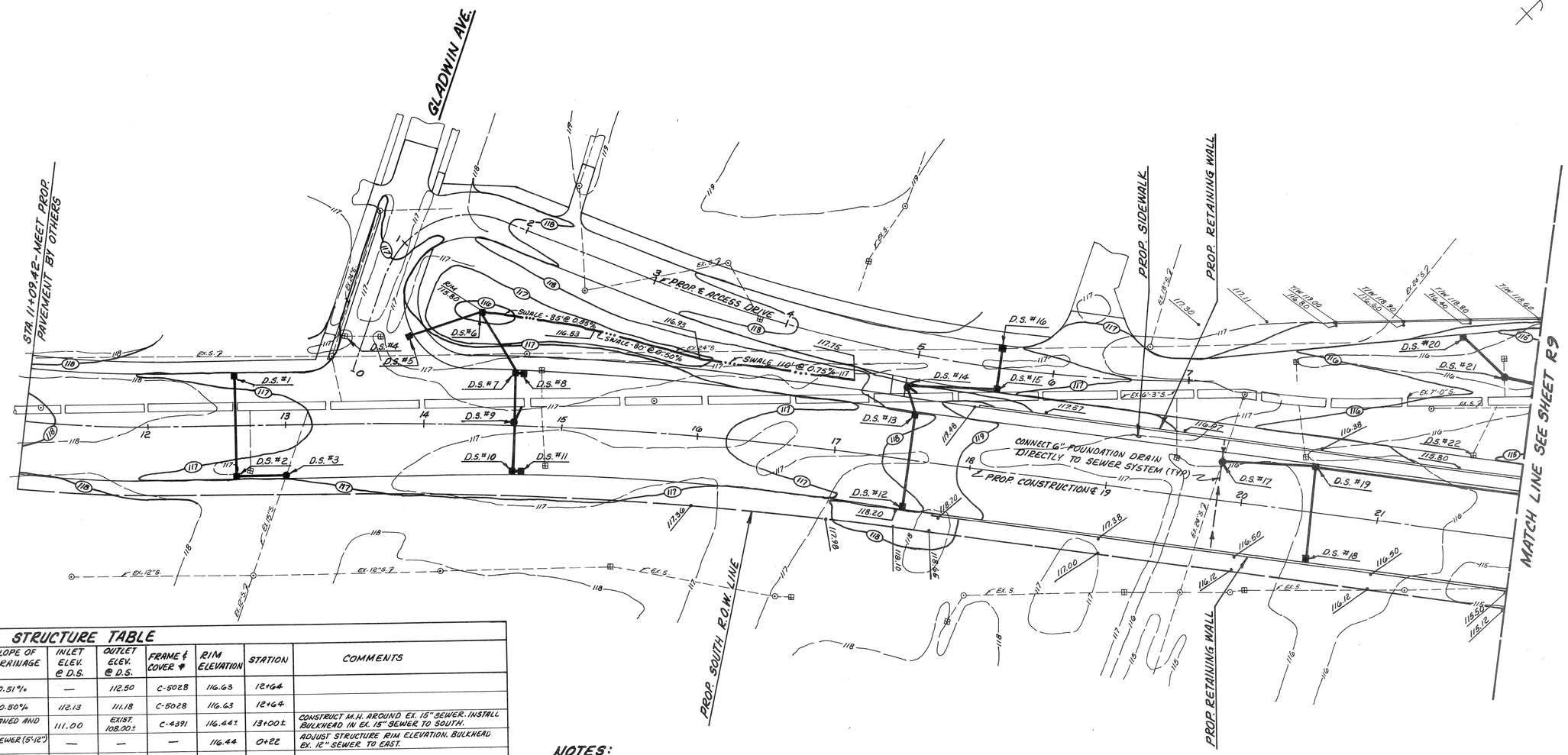

DRAINAGE STRUCTURE TABLE

DRAINAGE STRUCTURE NO. (D.S.#)	TYPE OF DRAINAGE STRUCTURE #	LENGTH, SIZE, TYPE & SLOPE OF SEWER DEPARTING DRAINAGE STRUCTURE.	INLET ELEV. @ D.S.	OUTLET ELEV. @ D.S.	FRAME & COVER #	RIM ELEVATION	STATION	COMMENTS
1	CATCH BASIN 'A' (C-5028)	73'OF 12" C-76 CL.III @ 0.51%	—	112.50	C-5028	116.63	12+64	
2	CATCH BASIN 'B' W/TRAP (C-5028)	36'OF 15" C-76 CL.III @ 0.50%	112.13	111.18	C-5028	116.63	12+64	
3	STD. SEWER M.H. (C-4391)	EX. 15" SEWER TO BE CLEANED AND INSPECTED.	111.00	EXIST. 108.00±	C-4391	116.44±	13+00±	CONSTRUCT M.H. AROUND EX. 15" SEWER. INSTALL BULKHEAD IN EX. 15" SEWER TO SOUTH.
4	EXISTING CATCH BASIN	EX. CATCH BASIN & OUTLET SEWER (5'-12") TO BE CLEANED.	—	—	—	116.44	0+22	ADJUST STRUCTURE RIM ELEVATION. BULKHEAD EX. 12" SEWER TO EAST.
5	CATCH BASIN 'A' (C-5028)	58'OF 12" C-76 CL.III @ 0.51%	—	112.18	C-5028	116.18	0+87	
6	CATCH BASIN 'B' (C-5028)	51'OF 12" C76 CL.III @ 0.51%	111.90	107.26	C-4394	115.80	14+41 81' N.	DOME TYPE
7	CATCH BASIN 'B' W/TRAP(C-5028)	36'OF 15" C76 CL.III @ 1.00%	N.-107.00 E.-112.13	103.00	C-5028	115.68	14+67	
8	CATCH BASIN 'A' (C-5028)	5'OF12" C-76 CL.III @ 0.60%	—	112.18	C-5028	115.68	14+72	
9	STD. DROP M.H. (C-4387)	13'OF 18" C-76 CL.III @ 1.00%	N.-102.64 S.-106.32	98.00±	C-4391	116.34	16+67	CONNECT TO EX. 6'-3" SEWER PER STANDARD C-4387 #
10	CATCH BASIN 'B' W/TRAP(C-5028)	36'OF 15"C-76 CL.III @ 0.50%	112.19	106.50	C-5028	115.72	14+67	
11	CATCH BASIN 'A' (C-5028)	5'OF 12"C-76 CL.III @ 0.60%	—	112.22	C-5028	115.72	14+72	
12	CATCH BASIN 'A' (C-5028)	67'OF 12" C-76 CL.III @ 0.51%	—	113.50	C-5028	117.68	17+55	
13	CATCH BASIN 'B' W/TRAP (C-5028)	21'OF 15" C-76 CL.III @ 0.62%	113.16	113.00	C-5028	117.68	17+55	
14	STD. DROP M.H. (C-4387)	5'OF 15" C76 CL.III @ 1.00%	E.-112.98 S.-112.87	98.00±	C-4391	118.20	17+47	CONNECT TO EX. 6'-3" SEWER PER STANDARD C-4387 #
15	CATCH BASIN 'B' W/TRAP (C-5028)	66'OF 12"C-76 CL.III @ 0.50%	113.41	113.31	C-5028	117.06	5+60	
16	CATCH BASIN 'A' (C-5028)	29'OF 12"C76 CL.III @ 0.52%	—	113.56	C-5028	117.06	5+60	
17	STD. SEWER M.H. (C-4387)	EX. 24" SEWER TO BE CLEANED & INSPECTED	120.25	EXIST. 98.50±	C-4391	124.25±	19+82± 27'± N.	CONSTRUCT M.H. AROUND EX. 24" SEWER. INSTALL BULKHEAD IN EX. 24" SEWER TO SOUTH.
18	CATCH BASIN 'A' (C-5028)	66'OF 12"C-76 CL.III @ 0.50%	—	122.69	C-5028	126.19	20+50	
19	CATCH BASIN 'B' W/TRAP (C-5028)	68'± OF 15"C-76 CL.III @ 2.96%	E.-122.40 S.-122.36	122.26	C-5028	126.19	20+50	
20	CATCH BASIN 'B' W/TRAP (C-5028)	42'± OF 12"C-76 CL.III @ 0.50%	—	111.67	C-5028	115.17	9+00	
21	STD. SEWER M.H (C-4387)	EX. 12" SEWER (7'±) TO BE CLEANED AND INSPECTED.	E.-110.94 W.-111.46	EXACT EL. UNKNOWN	C-4391	115.67	9+30	CONSTRUCT M.H. AROUND EX. 12" SEWER. INSTALL BULKHEAD IN EX. 12" SEWER TO NORTH.
22	EXISTING CATCH BASIN	EX. CATCH BASIN & OUTLET SEWER (50'±-12") TO BE CLEANED	—	EXIST. 110.48±	—	115.12	9+09	REALIGN AND ADJUST STRUCTURES FRAME AND COVER

(C-4387) - CITY OF DETROIT STANDARD DRAWING NUMBER

NOTES:

1. EXISTING UTILITIES AS SHOWN ON SHEETS R5, R6, R7 ARE FROM RECORD INFORMATION. AN EXPLORATORY TRENCH HAS BEEN PERFORMED TO RESOLVE POSSIBLE CONFLICTS WITH EXISTING UTILITIES AND THE PIER FOUNDATION IN CONNER LANE AND THE NORTH RETAINING WALL FOOTING AS IT "MARRIES" EXISTING MACK AVENUE. (THIS TRENCH INFORMATION DIFFERS FROM RECORD INFORMATION BY UP TO 6"). ELEVATIONS OF EXISTING AND PROPOSED UTILITIES ARE FROM RECORD INFORMATION AND FROM THE EXPLORATORY TRENCH.
2. PROPOSED STORM SEWER CONSTRUCTION SHALL BE BY "OPEN CUT" METHOD. UTILITIES THAT SPAN OVER THE STORM SEWER CONSTRUCTION SHALL BE SUPPORTED AND PROTECTED. UTILITIES THAT SPAN OVER A PORTION OF THE SHAFT REQUIRED FOR STANDARD AND DROP MANHOLE CONSTRUCTION SHALL BE SUPPORTED AND PROTECTED.
3. EXISTING MACK AVENUE CATCH BASINS WITH THE EXCEPTION OF D.S. #22 SHALL BE ABANDONED. THE OUTLET SEWER SHALL BE BULKHEADED AT THE CATCH BASIN #AT THE 6'-3" TO 7'-0" SEWER PER CITY OF DETROIT STD. DWG. # C-4990.
4. EXISTING CATCH BASINS NORTH OF MACK AVENUE IN GLADWIN AVENUE (EAST CURB) SHALL BE ABANDONED. THE OUTLET SEWER SHALL BE BULKHEADED.
5. ANY EXISTING SEWERS NOT TO REMAIN INCLUDING CATCH BASINS, INLETS, MANHOLES ENCOUNTERED DURING THE GRADE SEPARATION CONSTRUCTION SHALL BE REMOVED, BULKHEADED AND/OR ABANDONED.

LEGEND

EXISTING	PROPOSED	DESCRIPTION
111	111	CONTOURS
		STORM SEWERS
118.07	118.07	SPOT ELEVATIONS
⊙	●	MANHOLE (M.H.)
⊞	■	CATCH BASIN (C.B.)
		SWALE

NOTE:
FOR TRENCH DETAIL SEE SHEET R24

REVISIONS LOCATED BY COORDINATES ON SHEET							REFERENCE DRAWINGS
COOR'D	DESCRIPTION	DR'N	CK'D	AP'VD	DATE		

DESIGNED BY	M.E.L.
DRAWN BY	L.S.
TRACED BY	
CHECKED BY	B.P.

CITY OF DETROIT
JEFFERSON/CONNER INDUSTRIAL REVITALIZATION PROJECT
— MACK AVENUE IMPROVEMENTS —

STATE OF MICHIGAN — JULIAN E. MADISON — No. 14065 — REGISTERED PROFESSIONAL ENGINEER

MADISON MADISON INTERNATIONAL OF MICHIGAN
in association with
HNTB HOWARD NEEDLES TAMMEN & BERGENDOFF

DRAINAGE & CONTOUR PLAN

SHEET R8 OF 117 SHEETS
JOB NO. 8627
SCALE: 1" = 40'
DATE SEPT. 3, 1987

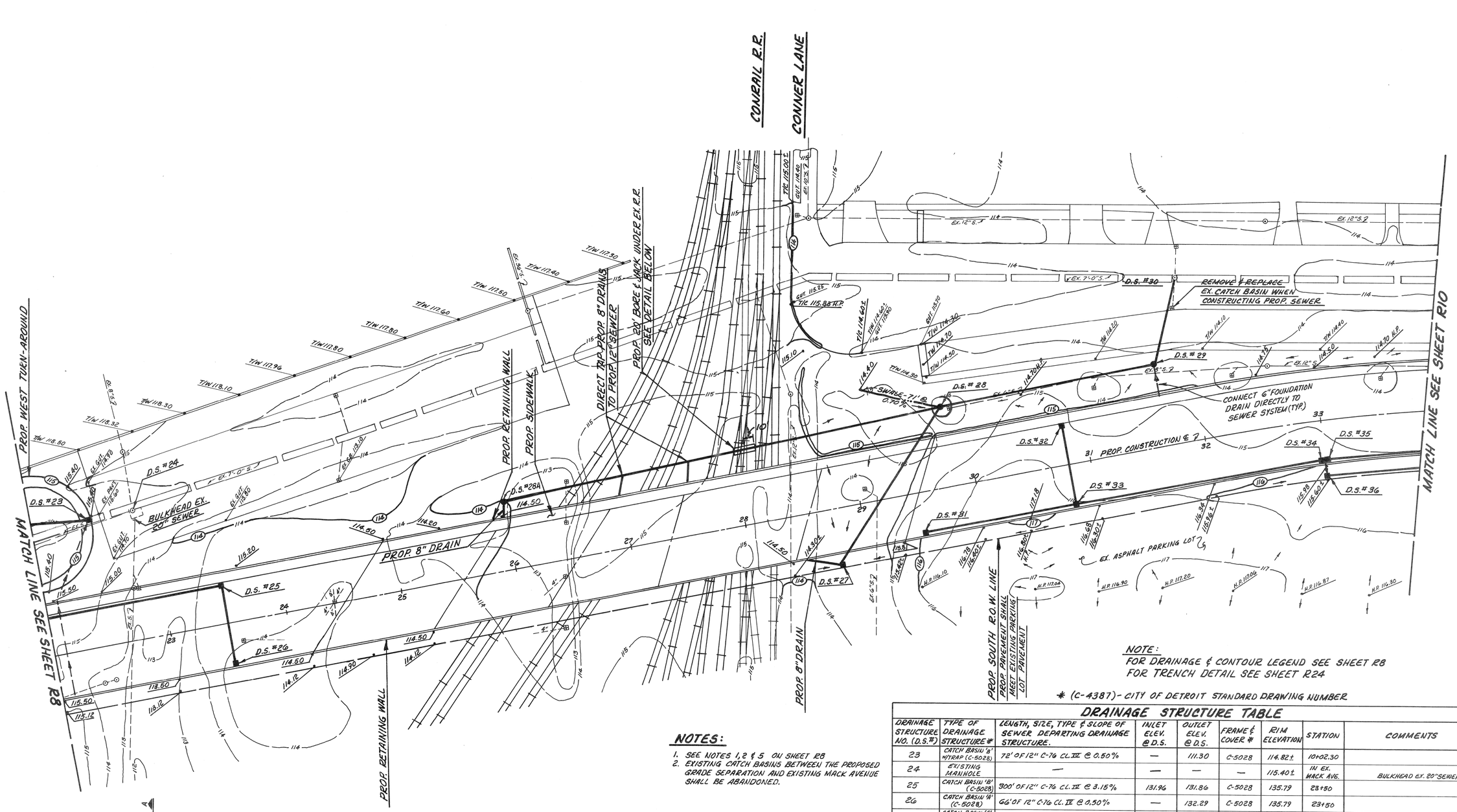

NOTE:
FOR DRAINAGE & CONTOUR LEGEND SEE SHEET R8
FOR TRENCH DETAIL SEE SHEET R24

* (C-4387) - CITY OF DETROIT STANDARD DRAWING NUMBER

NOTES:

1. SEE NOTES 1, 2 & 5 ON SHEET R8
2. EXISTING CATCH BASINS BETWEEN THE PROPOSED GRADE SEPARATION AND EXISTING MACK AVENUE SHALL BE ABANDONED.

DRAINAGE STRUCTURE TABLE

DRAINAGE STRUCTURE NO. (D.S.#)	TYPE OF DRAINAGE STRUCTURE*	LENGTH, SIZE, TYPE & SLOPE OF SEWER DEPARTING DRAINAGE STRUCTURE.	INLET ELEV. @ D.S.	OUTLET ELEV. @ D.S.	FRAME & COVER *	RIM ELEVATION	STATION	COMMENTS
23	CATCH BASIN 'G' W/TRAP (C-5028)	72' OF 12" C-76 CL. III @ 0.50%	—	111.30	C-5028	114.82±	10+02.30	
24	EXISTING MANHOLE	—	—	—	—	115.40±	IN EX. MACK AVE.	BULKHEAD EX. 20" SEWER TO SOUTH.
25	CATCH BASIN 'B' (C-5028)	300' OF 12" C-76 CL. III @ 3.15%	131.96	131.86	C-5028	135.79	23+90	
26	CATCH BASIN 'A' (C-5028)	66' OF 12" C-76 CL. III @ 0.50%	—	132.29	C-5028	135.79	23+50	
27	CATCH BASIN 'A' (C-5028)	160' OF 12" C-76 CL. III @ 0.50%	—	110.50	C-5028	114.00	28+67 48'S.	1-8" DRAIN CONNECTED @ ELEV. 110.50
28	CATCH BASIN 'B' (C-5028)	188' OF 15" C-76 CL. III @ 0.35%	W.-108.07 S.-109.70	108.07	C-4394	113.90	29+81 69'W.	DOME TYPE
29	CATCH BASIN 'B' W/TRAP (C-5028)	77' OF 15" C-76 CL. III @ 0.50%	101.41	108.30	C-4394	113.90	31+67 71'W.	DOME TYPE
30	STD. DROP M.H. (C-4387)	5' OF 15" C-76 CL. III @ 1.00%	107.91	98.00±	C-4391	113.80±	IN EX. MACK AVE.	REPLACE EX. M.H. W/STD. DROP M.H. RECONNECT EX. CATCH BASINS. CONNECT TO EX. 7'0" SEWER PER DWG. #C-4387
31	CATCH BASIN 'A' (C-5028)	132' OF 12" C-76 CL. III @ 3.26%	—	136.00	C-5028	139.50	29+50.88	
32	CATCH BASIN 'A' (C-5028)	66' OF 12" C-76 CL. III @ 0.91%	—	132.30	C-5028	135.80	30+82.62	
33	CATCH BASIN 'B' (C-5028)	221' OF 12" C-76 CL. III @ 3.26%	N-131.70 W.-131.70	130.29	C-5028	135.29	30+82.62	
34	SPECIAL 'L' TYPE C.B. (C-4389)	5' OF 12" C-76 CL. III @ 0.60%	—	125.42	C-5028	127.92	32+98	INVERT ELEV. IS 2'-6" BELOW RIM ELEV., C.B. IS OVER 12" STORM SEWER.
35	CATCH BASIN 'B' W/TRAP (C-5028)	227' OF 15" C-76 CL. III @ 3.33%	FROM D.S. 34- 125.37 33-123.09	123.09	C-5028	127.75	33+03	
36	CATCH BASIN 'G' W/TRAP (C-5028)	127' OF 15" C-76 CL. III @ 0.66%	—	110.60	C-5028	115.60	33+00 48'S	
28A	CATCH BASIN 'A' (C-5028)	385' OF 12" C76 CL. V @ 0.50% (20' OF 12" IS BORE & JACKED UNDER E.R.R.	—	110.00	C-5028	114.00	26+00 59'N.	1-8" DRAIN CONNECTED @ ELEV. 110.00

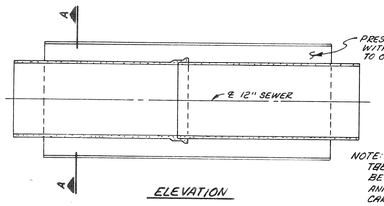

ELEVATION

NOTE:
TAIL ENDS OF THE CASING SHALL BE BULKHEAD AND THE ENTIRE ANNULAR SPACE BETWEEN THE CARRIER & CASING PIPES SHALL BE PRESSURE GROUTED.

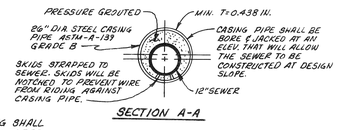

SECTION A-A

12" SEWER - BORE & JACK DETAIL

NO SCALE

REVISIONS LOCATED BY COORDINATES ON SHEET					REFERENCE DRAWINGS	DESIGNED BY	M.E.L.
COOR'D	DESCRIPTION	DR'N	CK'D	AP'VD	DATE	DRAWN BY	L.S.
						TRACED BY	
						CHECKED BY	B.P.

CITY OF DETROIT
JEFFERSON/CONNER INDUSTRIAL REVITALIZATION PROJECT
— MACK AVENUE IMPROVEMENTS —

JULIAN C. MADISON — No. 14065 — REGISTERED PROFESSIONAL ENGINEER — STATE OF MICHIGAN

MADISON MADISON INTERNATIONAL OF MICHIGAN
in association with
HNTB HOWARD NEEDLES TAMMEN & BERGENDOFF

DRAINAGE & CONTOUR PLAN

SHEET R9 OF 117 SHEETS
JOB NO. 8627
SCALE: 1"=40'
DATE SEPT. 3, 1987

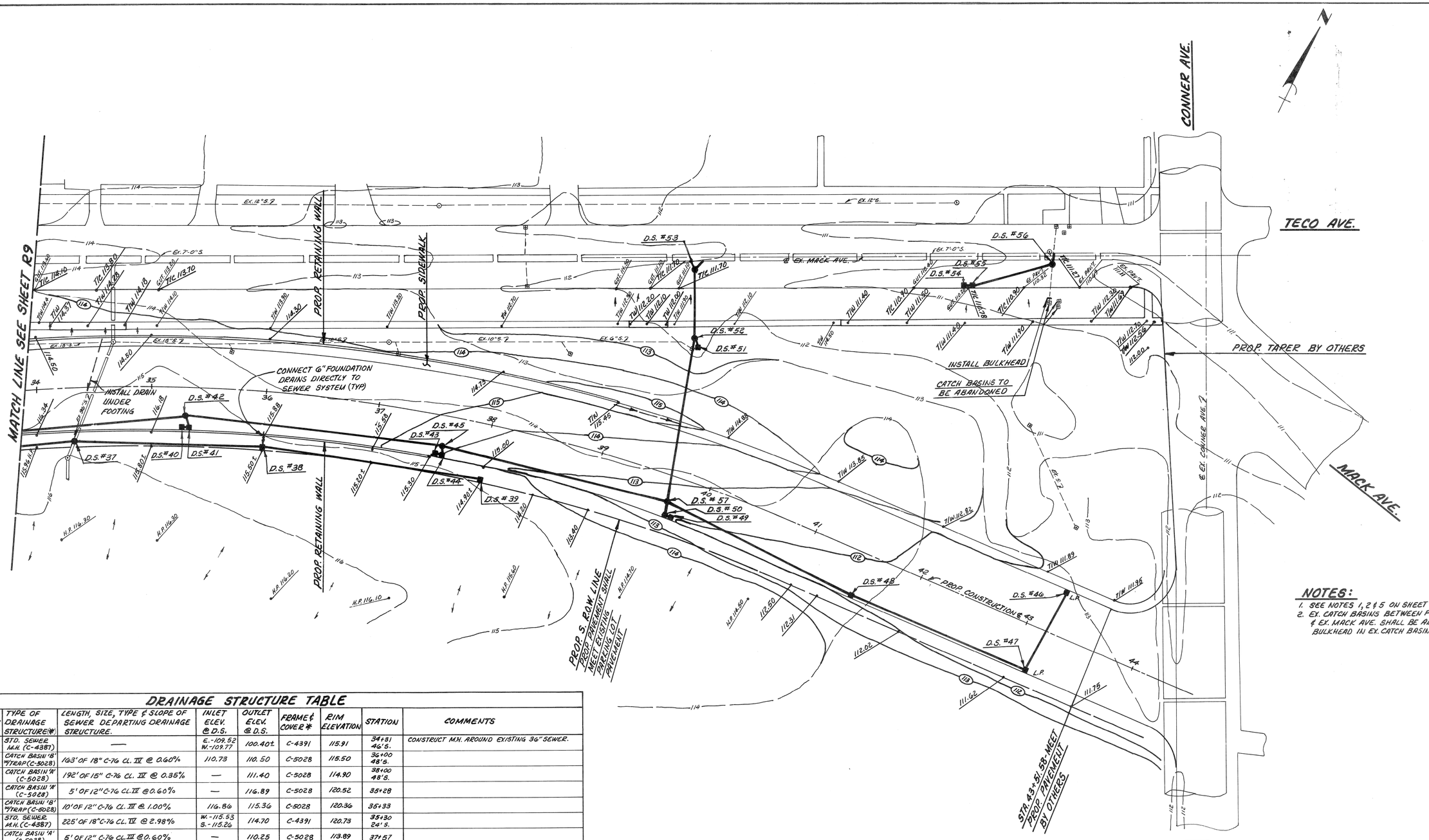

NOTES:

1. SEE NOTES 1, 2 & 5 ON SHEET R8
2. EX. CATCH BASINS BETWEEN PROP. GRADE SEPARATION & EX. MACK AVE. SHALL BE ABANDONED. INSTALL BULKHEAD IN EX. CATCH BASINS OUTLET SEWER.

DRAINAGE STRUCTURE TABLE

DRAINAGE STRUCTURE NO. (D.S.#)	TYPE OF DRAINAGE STRUCTURE(*)	LENGTH, SIZE, TYPE & SLOPE OF SEWER DEPARTING DRAINAGE STRUCTURE.	INLET ELEV. @ D.S.	OUTLET ELEV. @ D.S.	FRAME & COVER *	RIM ELEVATION	STATION	COMMENTS
37	STD. SEWER M.H. (C-4387)	—	E.-109.52 W.-109.77	100.40±	C-4391	115.91	34+81 46'S.	CONSTRUCT M.H. AROUND EXISTING 36" SEWER.
38	CATCH BASIN 'B' W/TRAP (C-5028)	163' OF 18" C-76 CL. III @ 0.60%	110.73	110.50	C-5028	115.50	36+00 48'S.	
39	CATCH BASIN 'A' (C-5028)	192' OF 15" C-76 CL. III @ 0.35%	—	111.40	C-5028	114.90	38+00 48'S.	
40	CATCH BASIN 'A' (C-5028)	5' OF 12" C-76 CL.III @0.60%	—	116.89	C-5028	120.52	35+28	
41	CATCH BASIN 'B' W/TRAP (C-5028)	10' OF 12" C-76 CL. III @ 1.00%	116.86	115.36	C-5028	120.36	35+33	
42	STD. SEWER M.H. (C-4387)	225' OF 18" C-76 CL. IV @ 2.98%	W.-115.53 S.-115.26	114.70	C-4391	120.73	35+30 24'S.	
43	CATCH BASIN 'A' (C-5028)	5' OF 12" C-76 CL.III @0.60%	—	110.25	C-5028	113.89	37+57	
44	CATCH BASIN 'B' W/TRAP (C-5028)	7' OF 12" C-76 CL. IV @ 1.14%	110.22	108.70	C-5028	113.79	37+62	
45	STD. SEWER M.H. (C-4387)	202' OF 21" C-76 CL. IV @ 1.76%	W.-108.00 S.-108.70	108.00	C-4391	114.02	37+61 27'S.	
46	CATCH BASIN 'A' (C-5028)	74' OF 12" C-76 CL. III @ 0.58%	—	107.43	C-5028	110.93	43+21	
47	CATCH BASIN 'B' W/TRAP (C-5028)	165' OF 15" C-76 CL. IV @ 0.75%	107.00	106.90	C-5028	110.69	43+15	
48	CATCH BASIN 'B' W/TRAP (C-5028)	177' OF 18" C-76 CL. IV @ 0.70%	105.66	105.66	C-5028	111.32	41+50	
49	CATCH BASIN 'A' (C-5028)	5' OF 12" C-76 CL. III @ 0.60%	—	108.50	C-5028	112.02	39+76	
50	CATCH BASIN 'B' W/TRAP (C-5028)	5' OF 12" C-76 CL. III @ 0.50%	D.S.#49 108.47	107.00	C-5028	112.04	39+70	
51	CATCH BASIN 'B' W/TRAP (C-5028)	8' OF 12" C-76 CL. III @ 0.50%	—	108.35	C-4394	111.85	39+50 112'N.	DOME TYPE, 79' SOUTH OF EX. MACK AVE. ℄

DRAINAGE STRUCTURE TABLE CONT.

52	STD. SEWER M.H. (C-4387)	60' OF 30" C-76 CL. III @ 0.50%	D.S.#57-103.52 D.S.#51-108.31	99.50	C-4391	111.70	39+45 119'N.	71' SOUTH OF EXISTING MACK. AVE. ℄
53	STD. DROP M.H. (C-4387)	7' OF 30" C-76 CL. III @ 0.50%	99.20	98.00±	C-4391	112.00±	—	CONNECT TO EX. 7'-0" SEWER PER STANDARD C-4387* M.H. TO BE LOCATED 10'S. OF EX. MACK AVE. ℄.
54	CATCH BASIN 'B' (C-5028)	5' OF 12" C-76 CL. III @ 0.60%	—	106.70	C-5028	110.20±	—	INSTALL IN S. GUTTER (NEW LOW PT.) EX. MACK AVE. 208'± WEST OF EX. CONNER AVE. ℄.
55	CATCH BASIN 'B' W/TRAP (C-5028)	73' OF 15" C-76 CL. III @ 1.00%	106.67	105.20	C-5028	110.20±	—	INSTALL IN S. GUTTER (NEW LOW PT.) EX. MACK AVE. 203'± WEST OF EX. CONNER AVE. ℄.
56	STD. DROP M.H. (C-4387)	3' OF 18" C-76 CL. IV @ 1.00%	W.-10'-4" N.-104.50± S.-99.26	98.00±	C-4391	110.90±	—	REMOVE EX. STRUCTURE. BULKHEAD EX. SEWER TO SOUTH. CONNECT TO EX. 7'-0" SEWER PER STANDARD C-4387* 8'S. OF EX. MACK AVE. ℄ & 133'W. OF EX. CONNER AVE. ℄
57	STD. SEWER M.H. (C-4387)	149' OF 30" C-76 CL. III @ 0.50%	E. 104.42 W.-104.24 S.-106.75	104.27	C-4391	112.30	39+67 30'S.	

* (C-4387)- CITY OF DETROIT STANDARD DRAWING NUMBER

NOTE:
FOR DRAINAGE & CONTOUR LEGEND SEE SHEET R8
FOR TRENCH DETAIL SEE SHEET R24

COOR'D	DESCRIPTION	DR'N	CK'D	AP'VD	DATE

REVISIONS LOCATED BY COORDINATES ON SHEET

REFERENCE DRAWINGS

DESIGNED BY M.E.L.
DRAWN BY L.S.
TRACED BY
CHECKED BY B.P.

CITY OF DETROIT
JEFFERSON/CONNER INDUSTRIAL REVITALIZATION PROJECT
— MACK AVENUE IMPROVEMENTS —

STATE OF MICHIGAN — JULIAN E. MADISON — No. 14065 — REGISTERED PROFESSIONAL ENGINEER

MADISON MADISON INTERNATIONAL OF MICHIGAN
in association with
HNTB HOWARD NEEDLES TAMMEN & BERGENDOFF

DRAINAGE & CONTOUR PLAN

SHEET R10 OF 117 SHEETS
JOB NO. 8627
SCALE: 1"=40'
DATE SEPT. 3, 1987

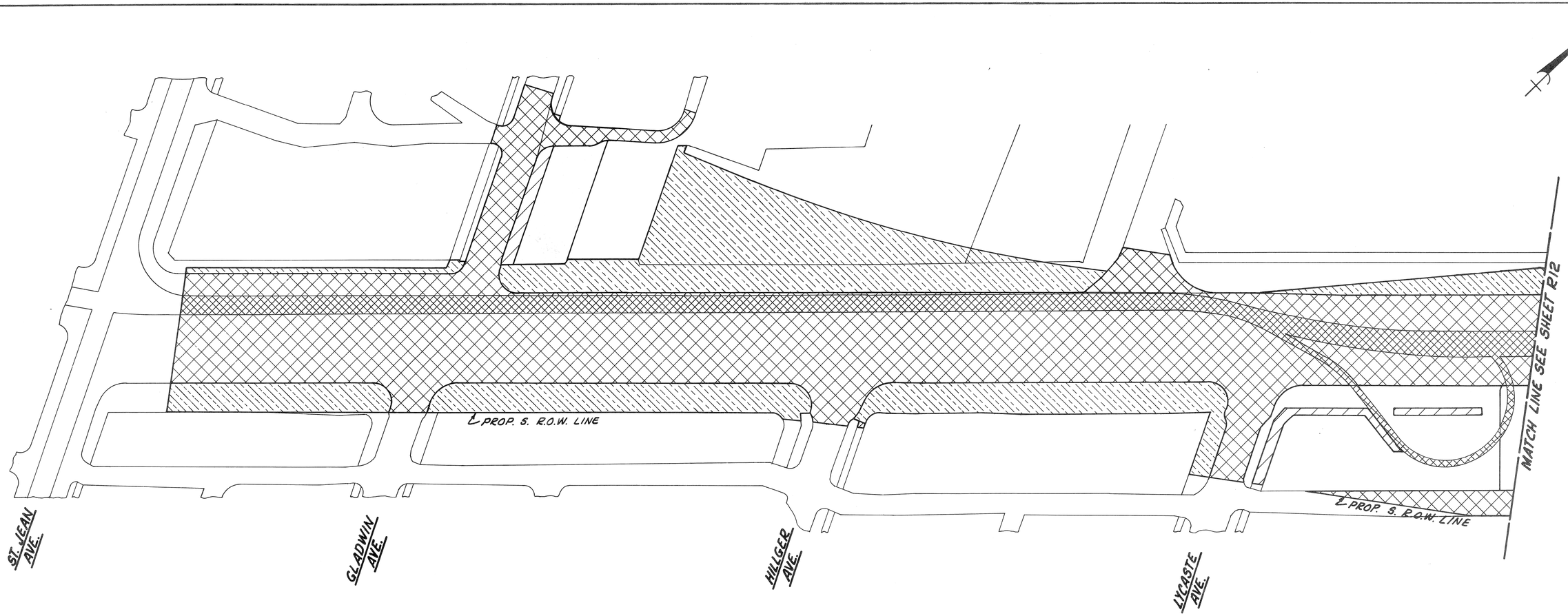

NOTE :

1. SAWCUTTING OF PAVEMENT IS A PART OF AND INCIDENTAL TO "REMOVING PAVEMENT".
2. REMOVING BITUMINOUS SURFACE REGARDLESS OF DEPTH, WILL NOT BE PAID FOR SEPARATELY BUT SHALL BE CONSIDERED INCIDENTAL TO "REMOVING PAVEMENT".
3. THE CUTTING OF PAVEMENT SHALL BE DONE ONLY IN SUCH AREAS AND BY SUCH METHODS AS APPROVED BY THE ENGINEER." STREET PAVEMENT IS TO BE REPLACED WITH GRADE "A" CONCRETE OR EQUIVALENT AS PER CURRENT MDOT STANDARD SPECIFICATION AS DETERMINED BY THE ENGINEER. IF REQUIRED TO CONFORM TO EXISTING PAVEMENT, A TOP COURSE OF BITUMINOUS IS TO BE ADDED.
4. WHEN THE DISTANCE TO THE NEAR EDGE OF TRENCH IS LESS THAN 3 FEET, THE PAVEMENT SHALL BE REMOVED TO THE FACE OF THE CURB FOR PAVEMENT WITH SEPARATE-TYPE CURB, OR TO THE BACK OF THE CURB FOR PAVEMENT WITH INTEGRAL CURB.
5. THE CONTRACTOR SHALL MAINTAIN TWO-LANE TRAFFIC AT ALL TIMES THROUGHOUT THE PROJECT. DRIVE APPROACHES TO COMMERCIAL PROPERTIES SHALL NOT BE COMPLETELY CLOSED TO TRAFFIC WITHOUT THE EXPRESS APPROVAL OF THE ENGINEER. GAPPING, PART-WIDTH CONSTRUCTION AND OTHER METHODS AS DIRECTED BY THE ENGINEER SHALL BE UTILIZED TO FULFILL THE INTENT OF THESE PROVISIONS. MAINTAINING TRAFFIC AND CONSTRUCTION SIGNING AS DEFINED IN THE *PLANS & SPECIFICATIONS* INDICATES THE SCOPE OF MAINTAINING TRAFFIC AND CONTROLLING ACCESS TO THE CONSTRUCTION AREA. GAPPING & PART WIDTH CONSTRUCTION ARE INCIDENTAL TO THIS PROJECT.

* 6. THE CONTRACTOR SHALL REFER TO THE "SPECIAL PROVISIONS FOR PAVEMENT, CURB, AND SIDEWALK REPLACEMENT - ISOLATED AND CONTINUOUS UTILITY CUTS IN DETROIT STREETS" FOR PAVEMENT, SIDEWALK, AND CURB REMOVAL AND REPLACEMENT AS APPLIED TO UTILITY TRENCH CONSTRUCTION.

PAVEMENT REMOVAL LEGEND

- PAVEMENT REMOVAL
- CONCRETE PARKING
- BURIED D.S.R. TRACKS
- CONCRETE WALK
- ASPHALT

COOR'D	DESCRIPTION	DR'N	CK'D	AP'VD	DATE
REVISIONS LOCATED BY COORDINATES ON SHEET					

REFERENCE DRAWINGS

DESIGNED BY	M.E.L./L.S.
DRAWN BY	L.S.
TRACED BY	
CHECKED BY	B.P.

CITY OF DETROIT
JEFFERSON/CONNER INDUSTRIAL REVITALIZATION PROJECT
— MACK AVENUE IMPROVEMENTS —

STATE OF MICHIGAN — JULIAN C. MADISON — No. 14065 — REGISTERED PROFESSIONAL ENGINEER

MADISON MADISON INTERNATIONAL OF MICHIGAN
in association with
HNTB HOWARD NEEDLES TAMMEN & BERGENDOFF

PAVEMENT REMOVAL PLAN

SHEET	R11 OF 117 SHEETS
JOB NO.	8627
SCALE:	1"=40'
DATE	SEPT. 3, 1987

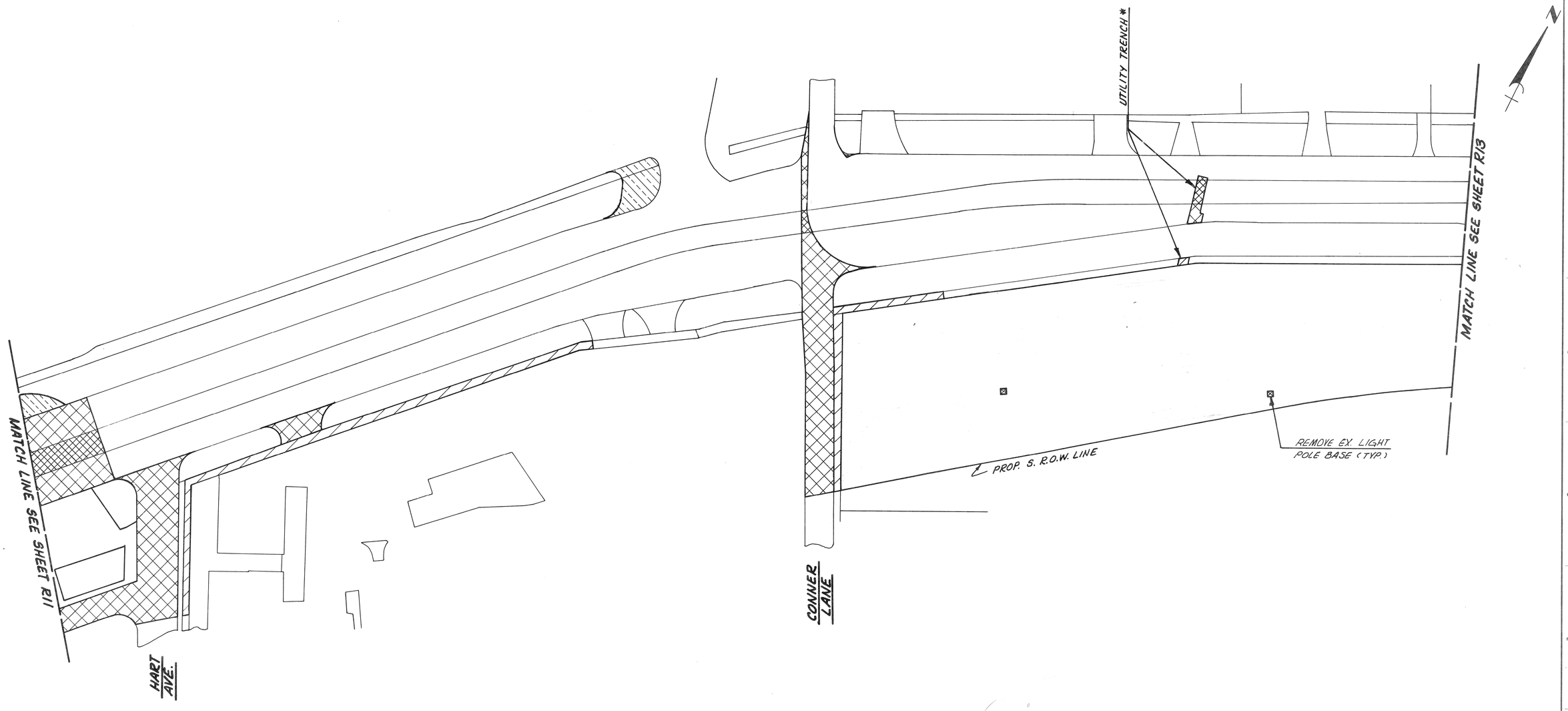

NOTE:
FOR PAVEMENT REMOVAL LEGEND SEE SHEET R11
* SEE NOTE 6 ON SHEET R11

COOR'D	DESCRIPTION	DR'N	CK'D	AP'VD	DATE
REVISIONS LOCATED BY COORDINATES ON SHEET					

REFERENCE DRAWINGS

DESIGNED BY	M.E.L./L.S.
DRAWN BY	L.S.
TRACED BY	
CHECKED BY	B.P.

CITY OF DETROIT
JEFFERSON/CONNER INDUSTRIAL REVITALIZATION PROJECT
— MACK AVENUE IMPROVEMENTS —

STATE OF MICHIGAN — KEVIN C. MADISON — ENGINEER — No. 14065 — REGISTERED PROFESSIONAL ENGINEER

MADISON MADISON INTERNATIONAL OF MICHIGAN
in association with
HNTB HOWARD NEEDLES TAMMEN & BERGENDOFF

PAVEMENT REMOVAL PLAN

SHEET R12 OF 117 SHEETS
JOB NO. 8627
SCALE: 1"=40'
DATE SEPT. 3, 1987

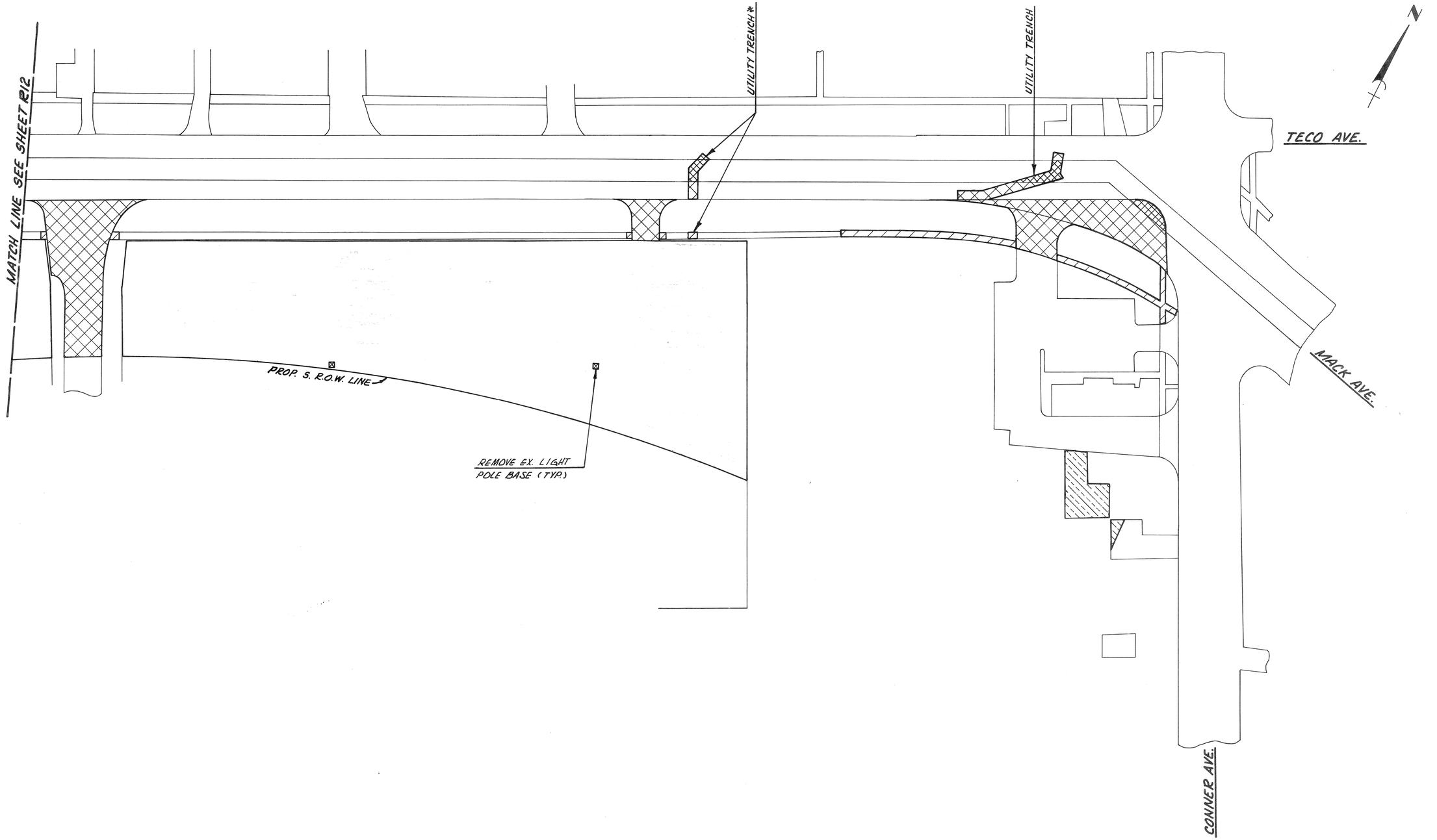

NOTE:
FOR PAVEMENT REMOVAL LEGEND SEE SHEET R11
* SEE NOTE 6 ON SHEET R11

COOR'D	DESCRIPTION	DR'N	CK'D	AP'VD	DATE
REVISIONS LOCATED BY COORDINATES ON SHEET					

REFERENCE DRAWINGS

DESIGNED BY	M.E.L./L.S.
DRAWN BY	L.S.
TRACED BY	
CHECKED BY	B.P.

CITY OF DETROIT
JEFFERSON/CONNER INDUSTRIAL REVITALIZATION PROJECT
— MACK AVENUE IMPROVEMENTS —

REGISTERED PROFESSIONAL ENGINEER — STATE OF MICHIGAN — JULIAN C. MADISON — No. 14065

MADISON MADISON INTERNATIONAL OF MICHIGAN
in association with
HNTB HOWARD NEEDLES TAMMEN & BERGENDOFF

PAVEMENT REMOVAL PLAN

SHEET R13 OF 117 SHEETS
JOB NO. 8627
SCALE: 1"=40'
DATE SEPT. 3, 1987

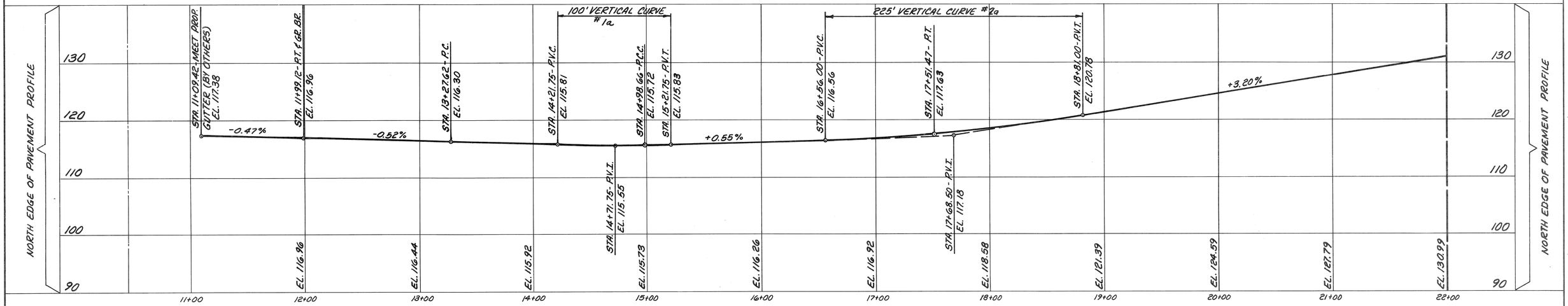

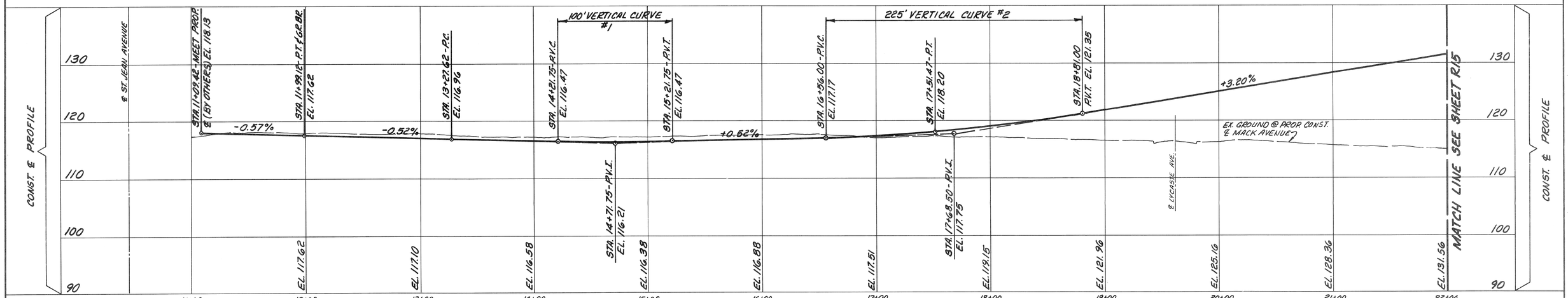

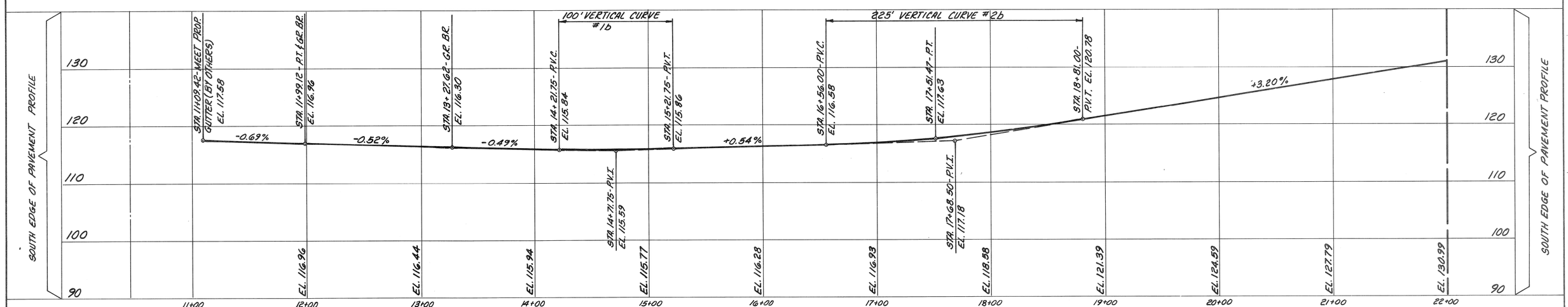

COOR'D	DESCRIPTION	DR'N	CK'D	AP'VD	DATE
REVISIONS LOCATED BY COORDINATES ON SHEET					

REFERENCE DRAWINGS

DESIGNED BY	M.E.L.
DRAWN BY	L.S.
TRACED BY	
CHECKED BY	B.P.

CITY OF DETROIT
JEFFERSON/CONNER INDUSTRIAL REVITALIZATION PROJECT
— MACK AVENUE IMPROVEMENTS —

STATE OF MICHIGAN — JULIAN C. JACOBSON — REGISTERED PROFESSIONAL ENGINEER — NO. 14065

MADISON MADISON INTERNATIONAL OF MICHIGAN
in association with
HNTB HOWARD NEEDLES TAMMEN & BERGENDOFF

MACK AVENUE PROFILE FROM STA. 11+09.42 TO STA. 22+00

SHEET R14 OF 117 SHEETS
JOB NO. 8627
SCALE: 1"= 40' HORIZONTAL, 1"= 8' VERTICAL
DATE SEPT. 3, 1987

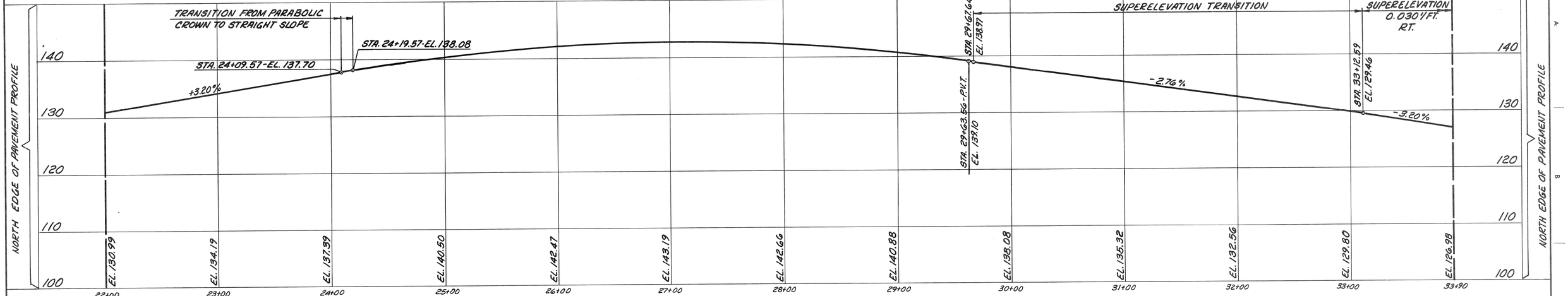

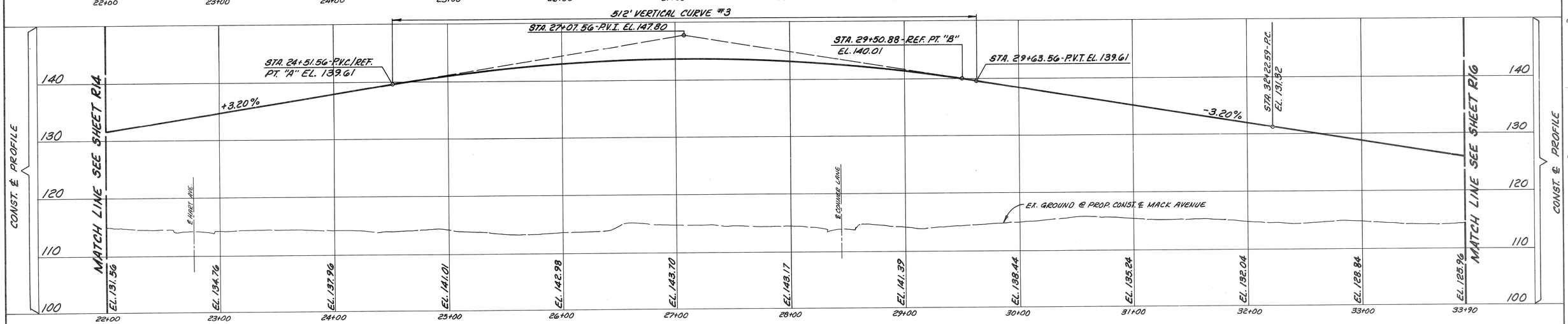

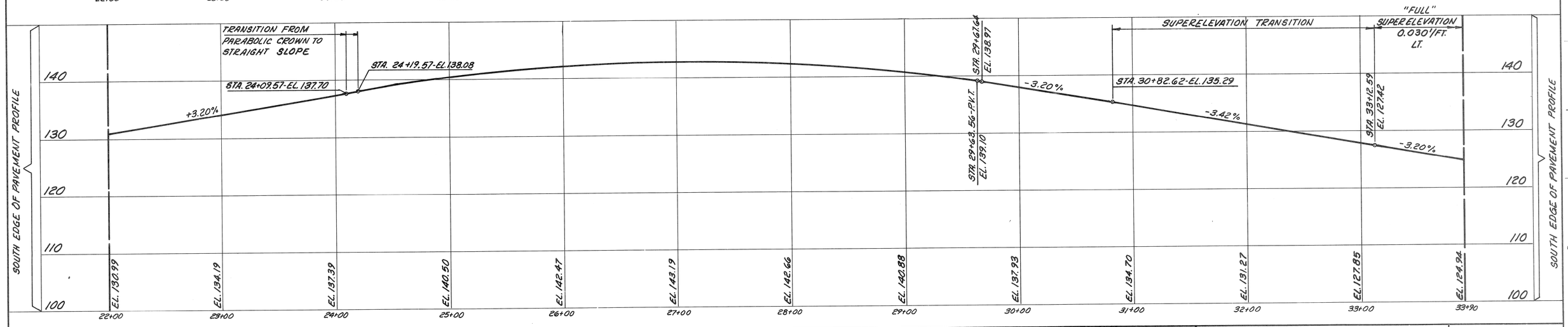

COOR'D	DESCRIPTION	DR'N	CK'D	AP'VD	DATE
REVISIONS LOCATED BY COORDINATES ON SHEET					

REFERENCE DRAWINGS

DESIGNED BY	M.E.L.
DRAWN BY	L.S.
TRACED BY	
CHECKED BY	B.P.

CITY OF DETROIT
JEFFERSON/CONNER INDUSTRIAL REVITALIZATION PROJECT
— MACK AVENUE IMPROVEMENTS —

STATE OF MICHIGAN — JULIAN C. MADISON — ENGINEER — LIC. 14065 — REGISTERED PROFESSIONAL ENGINEER

MADISON MADISON INTERNATIONAL OF MICHIGAN
in association with
HNTB HOWARD NEEDLES TAMMEN & BERGENDOFF

MACK AVENUE PROFILE FROM STA. 22+00 TO STA. 33+90

SHEET R15 OF 117 SHEETS
JOB NO. 8627
SCALE: 1"= 40' HORIZONTAL, 1"= 8' VERTICAL
DATE SEPT. 3, 1987

COOR'D	DESCRIPTION	DR'N	CK'D	AP'VD	DATE
REVISIONS LOCATED BY COORDINATES ON SHEET					

REFERENCE DRAWINGS

DESIGNED BY	M.E.L.
DRAWN BY	L.S.
TRACED BY	
CHECKED BY	B.P.

CITY OF DETROIT
JEFFERSON/CONNER INDUSTRIAL REVITALIZATION PROJECT
— MACK AVENUE IMPROVEMENTS —

STATE OF MICHIGAN — JULIAN C. MADISON — REGISTERED PROFESSIONAL ENGINEER — NO. 14065

MADISON MADISON INTERNATIONAL OF MICHIGAN
in association with
HNTB HOWARD NEEDLES TAMMEN & BERGENDOFF

MACK AVENUE PROFILE FROM STA. 33+90 TO STA. 43+51.58

SHEET R16 OF 117 SHEETS
JOB NO. 8627
SCALE 1"= 40' HORIZONTAL, 1"= 8' VERTICAL
DATE SEPT. 3, 1987

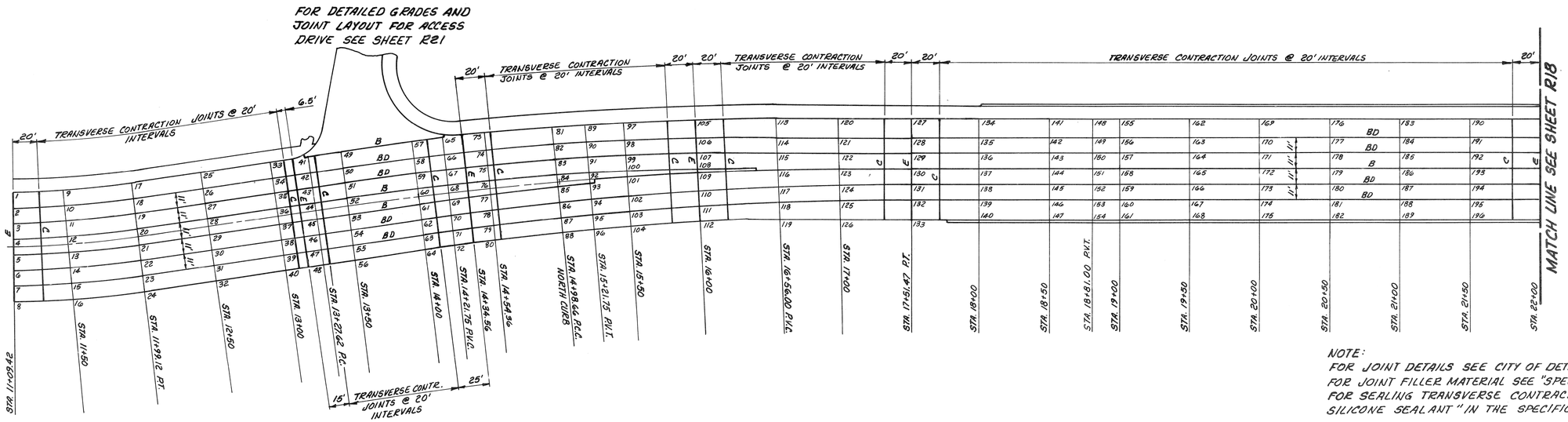

NOTE:
FOR JOINT DETAILS SEE CITY OF DETROIT STD. DWG. #C-4943
FOR JOINT FILLER MATERIAL SEE "SPECIAL PROVISION FOR SEALING TRANSVERSE CONTRACTION JOINTS W/ SILICONE SEALANT" IN THE SPECIFICATION.

PLAN
SCALE: 1"=40'

DETAILED GRADES
SCALE: 1"=20' HORIZ.
1"= 2' VERT.

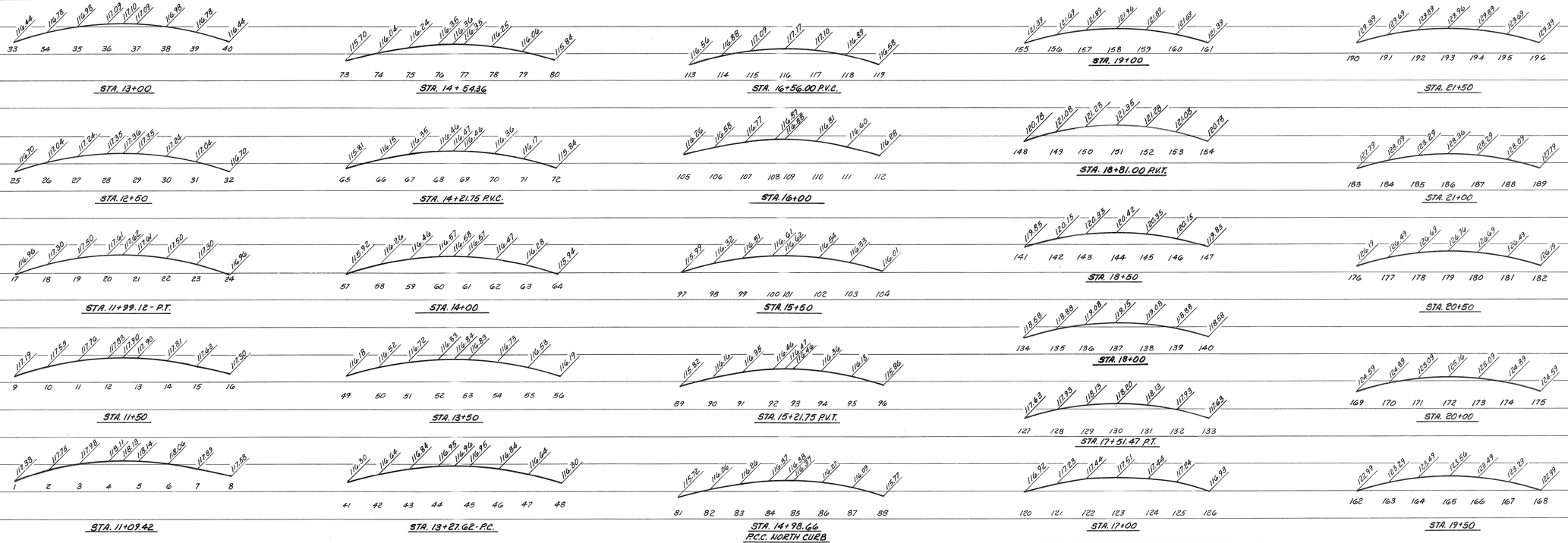

COOR'D	DESCRIPTION	DR'N	CK'D	AP'VD	DATE
REVISIONS LOCATED BY COORDINATES ON SHEET					

REFERENCE DRAWINGS

DESIGNED BY	M.E.L./L.S.
DRAWN BY	L.S.
TRACED BY	
CHECKED BY	B.P.

CITY OF DETROIT
JEFFERSON/CONNER INDUSTRIAL REVITALIZATION PROJECT
— MACK AVENUE IMPROVEMENTS —

STATE OF MICHIGAN — JULIAN C. MADISON — ENGINEER — No. 14065 — REGISTERED PROFESSIONAL ENGINEER

MADISON MADISON INTERNATIONAL OF MICHIGAN
in association with
HNTB HOWARD NEEDLES TAMMEN & BERGENDOFF

MACK AVENUE DETAILED GRADES AND JOINT LAYOUT

SHEET R17 OF 117 SHEETS
JOB NO. 8627
SCALE: AS NOTED
DATE SEPT. 3, 1987

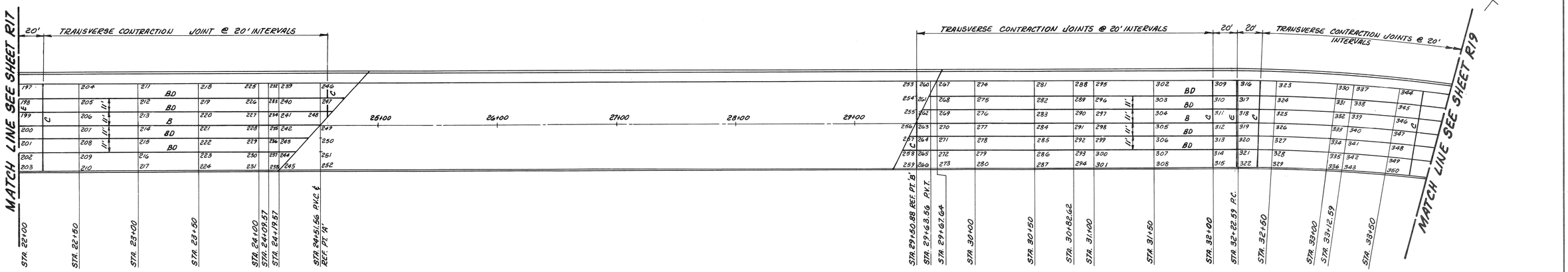

PLAN
SCALE: 1"=40'

NOTE:
FOR JOINT DETAILS SEE CITY OF DETROIT STD. DWG. #C-4943
FOR JOINT FILLER MATERIAL SEE "SPECIAL PROVISION FOR SEALING TRANSVERSE CONTRACTION JOINTS W/ SILICONE SEALANT" IN THE SPECIFICATION.

DETAILED GRADES
SCALE: 1"=20' HORIZ.
1"= 2' VERT.

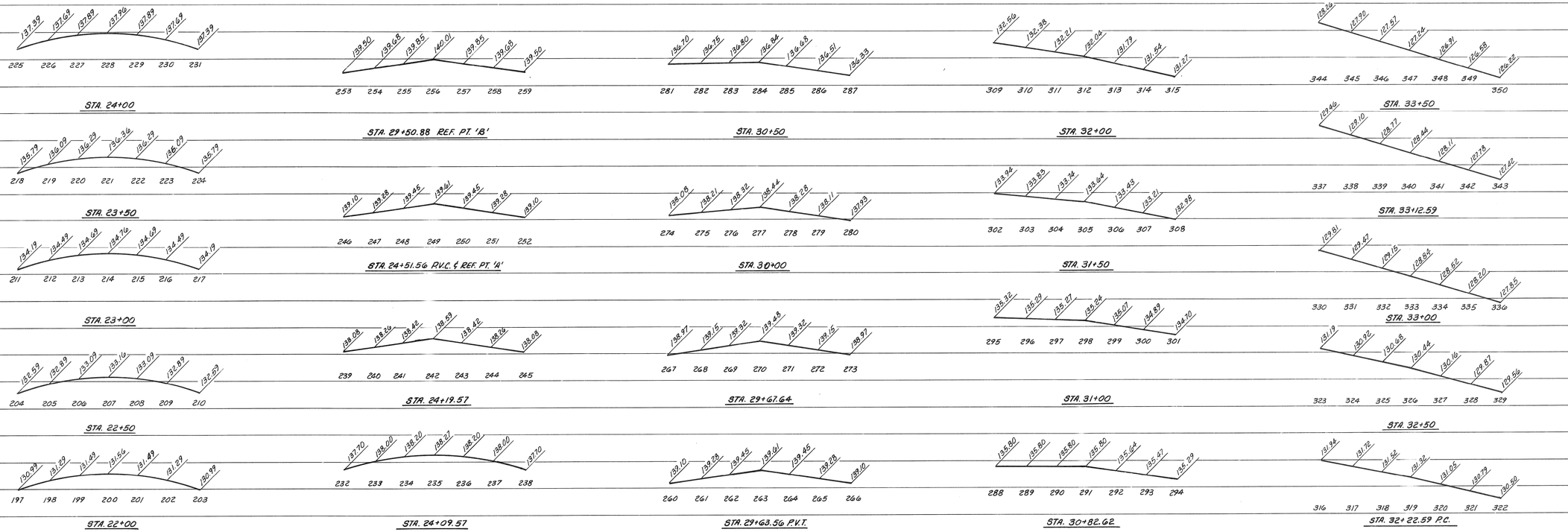

								REFERENCE DRAWINGS	DESIGNED BY	M.E.L./L.S.
									DRAWN BY	L.S.
									TRACED BY	
COOR'D	DESCRIPTION		DR'N	CK'D	AP'VD	DATE			CHECKED BY	B.P.
REVISIONS LOCATED BY COORDINATES ON SHEET										

CITY OF DETROIT
JEFFERSON/CONNER INDUSTRIAL REVITALIZATION PROJECT
— MACK AVENUE IMPROVEMENTS —

JULIAN C. MATSON — Registered Professional Engineer — No. 14065

MADISON MADISON INTERNATIONAL OF MICHIGAN
in association with
HNTB HOWARD NEEDLES TAMMEN & BERGENDOFF

MACK AVENUE DETAILED GRADES AND JOINT LAYOUT

SHEET R18 OF 117 SHEETS
JOB NO. 8627
SCALE: AS NOTED
DATE SEPT. 3, 1987

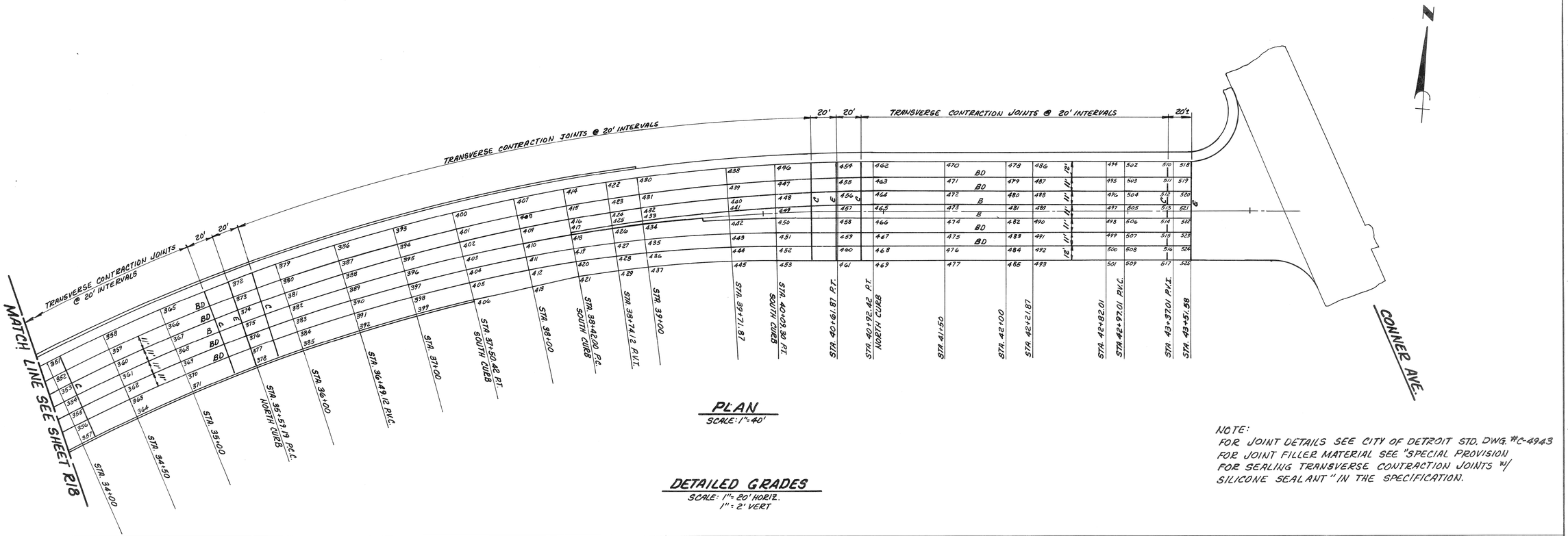

PLAN
SCALE: 1"=40'

NOTE:
FOR JOINT DETAILS SEE CITY OF DETROIT STD. DWG. #C-4943
FOR JOINT FILLER MATERIAL SEE "SPECIAL PROVISION FOR SEALING TRANSVERSE CONTRACTION JOINTS W/ SILICONE SEALANT" IN THE SPECIFICATION.

DETAILED GRADES

SCALE: 1"= 20' HORIZ.
1" = 2' VERT

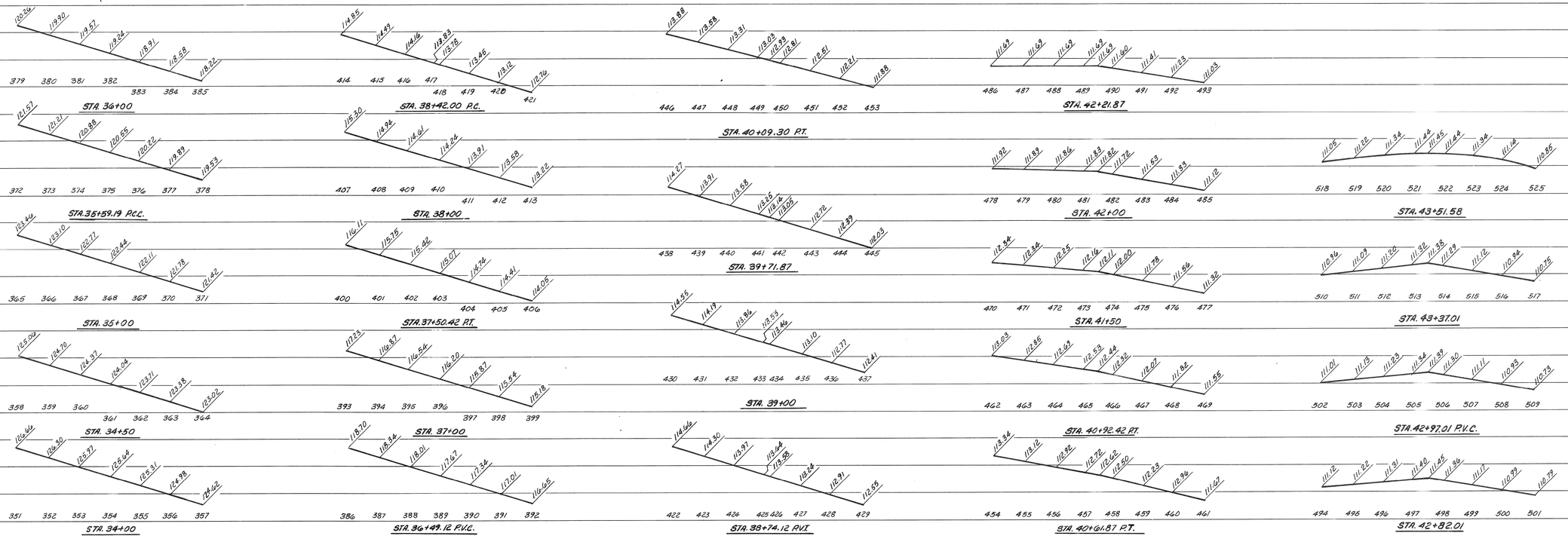

							REFERENCE DRAWINGS	DESIGNED BY	M.E.L. / L.S.
								DRAWN BY	L.S.
								TRACED BY	
COOR'D	DESCRIPTION	DR'N	CK'D	AP'VD	DATE			CHECKED BY	B.P.

REVISIONS LOCATED BY COORDINATES ON SHEET

CITY OF DETROIT
JEFFERSON/CONNER INDUSTRIAL REVITALIZATION PROJECT
— MACK AVENUE IMPROVEMENTS —

STATE OF MICHIGAN — JULIAN C. MADISON — REGISTERED PROFESSIONAL ENGINEER — No. 14065

MADISON MADISON INTERNATIONAL OF MICHIGAN
in association with
HNTB HOWARD NEEDLES TAMMEN & BERGENDOFF

MACK AVENUE DETAILED GRADES AND JOINT LAYOUT

SHEET R19 OF 117 SHEETS
JOB NO. 8627
SCALE: AS NOTED
DATE SEPT. 3, 1987

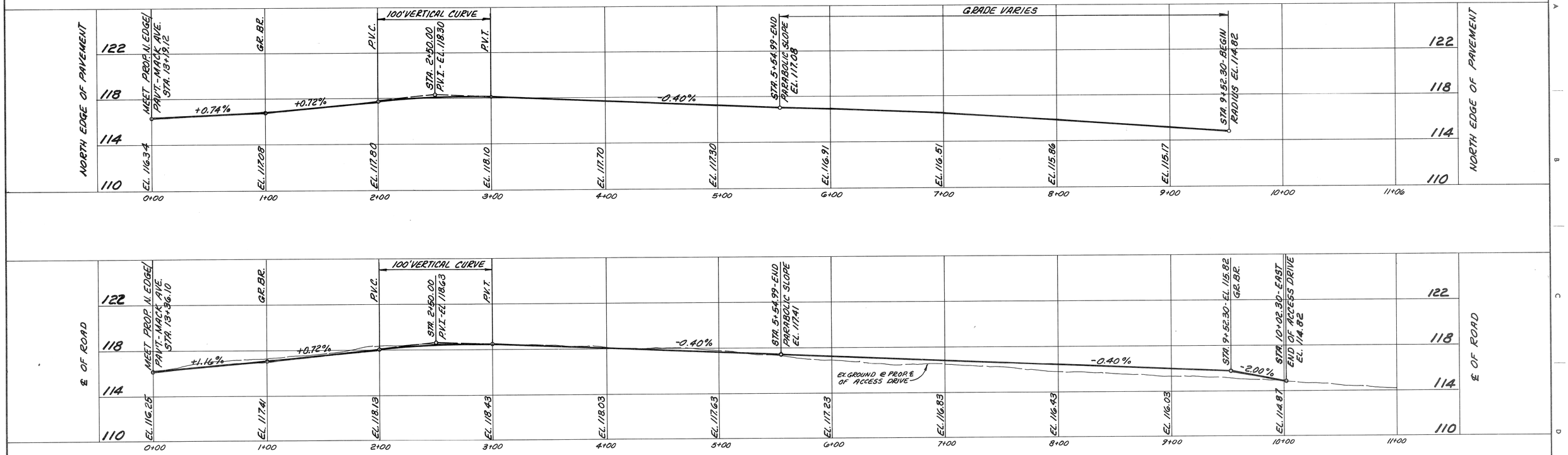
NORTH EDGE OF PAVEMENT
MEET PROP. N. EDGE/ PAV'T.-MACK AVE. STA. 13+19.12
GR. BR.
P.V.C.
100' VERTICAL CURVE
STA. 2+50.00 P.V.I.-EL. 118.30
P.V.T.
GRADE VARIES
STA. 5+54.99-END PARABOLIC SLOPE EL. 117.08
STA. 9+52.30-BEGIN RADIUS EL. 114.82
+0.74%
+0.72%
-0.40%
EL. 116.34
EL. 117.08
EL. 117.80
EL. 118.10
EL. 117.70
EL. 117.30
EL. 116.91
EL. 116.51
EL. 115.86
EL. 115.17
122
118
114
110
0+00
1+00
2+00
3+00
4+00
5+00
6+00
7+00
8+00
9+00
10+00
11+06
NORTH EDGE OF PAVEMENT

℄ OF ROAD
MEET PROP. N. EDGE/ PAV'T.-MACK AVE. STA. 13+36.10
GR. BR.
P.V.C.
100' VERTICAL CURVE
STA. 2+50.00 P.V.I.-EL. 118.63
P.V.T.
STA. 5+54.99-END PARABOLIC SLOPE EL. 117.41
STA. 9+52.30-EL. 115.82 GR. BR.
STA. 10+02.30-EAST END OF ACCESS DRIVE EL. 114.82
+1.16%
+0.72%
-0.40%
-2.00%
EX. GROUND @ PROP. ℄ OF ACCESS DRIVE
EL. 116.25
EL. 117.41
EL. 118.13
EL. 118.43
EL. 118.03
EL. 117.63
EL. 117.23
EL. 116.83
EL. 116.43
EL. 116.03
EL. 114.87
122
118
114
110
0+00
1+00
2+00
3+00
4+00
5+00
6+00
7+00
8+00
9+00
10+00
11+00
℄ OF ROAD

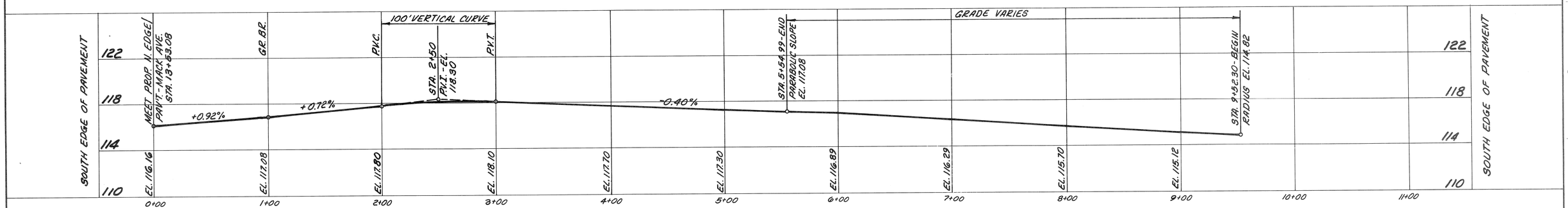
SOUTH EDGE OF PAVEMENT
MEET PROP. N. EDGE/ PAV'T.-MACK AVE. STA. 13+63.08
GR. BR.
P.V.C.
100' VERTICAL CURVE
STA. 2+50 P.V.I.-EL. 118.30
P.V.T.
GRADE VARIES
STA. 5+54.99-END PARABOLIC SLOPE EL. 117.08
STA. 9+52.30-BEGIN RADIUS EL. 114.82
+0.92%
+0.72%
-0.40%
EL. 116.16
EL. 117.08
EL. 117.80
EL. 118.10
EL. 117.70
EL. 117.30
EL. 116.89
EL. 116.29
EL. 115.70
EL. 115.12
122
118
114
110
0+00
1+00
2+00
3+00
4+00
5+00
6+00
7+00
8+00
9+00
10+00
11+00
SOUTH EDGE OF PAVEMENT

| | | |

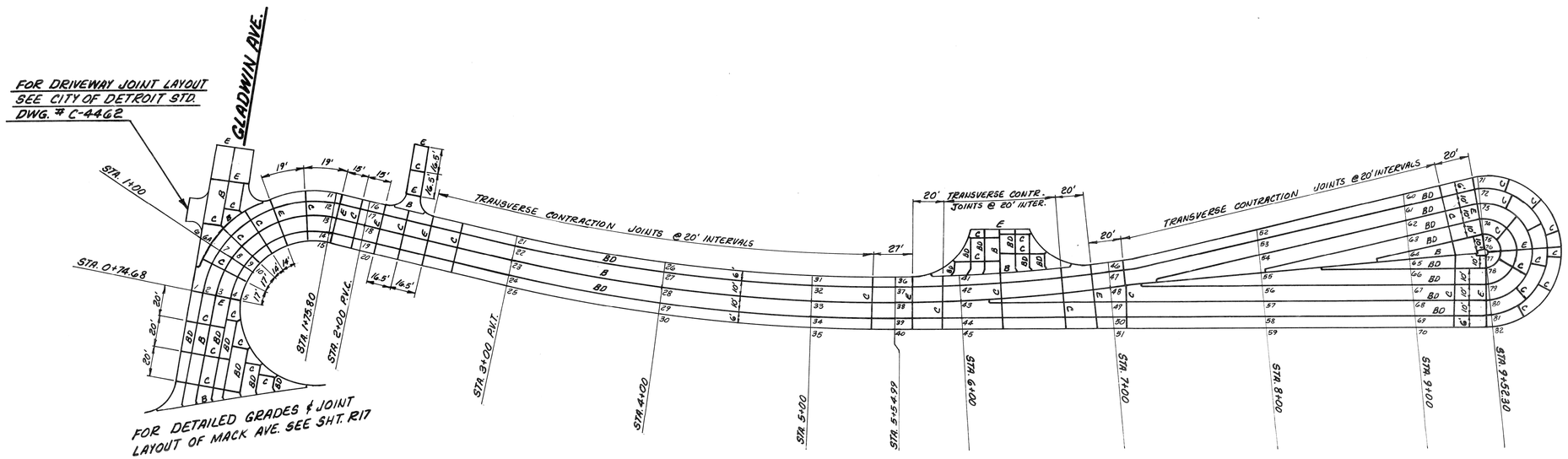

PLAN
SCALE: 1" = 40'

NOTE:
FOR JOINT DETAILS SEE CITY OF DETROIT STD. DWG. #C-4943
FOR JOINT FILLER MATERIAL SEE "SPECIAL PROVISION FOR SEALING TRANSVERSE CONTRACTION JOINTS W/ SILICONE SEALANT" IN THE SPECIFICATION.

DETAILED GRADES
SCALE: 1" = 20' HORIZ.
1" = 2' VERT.

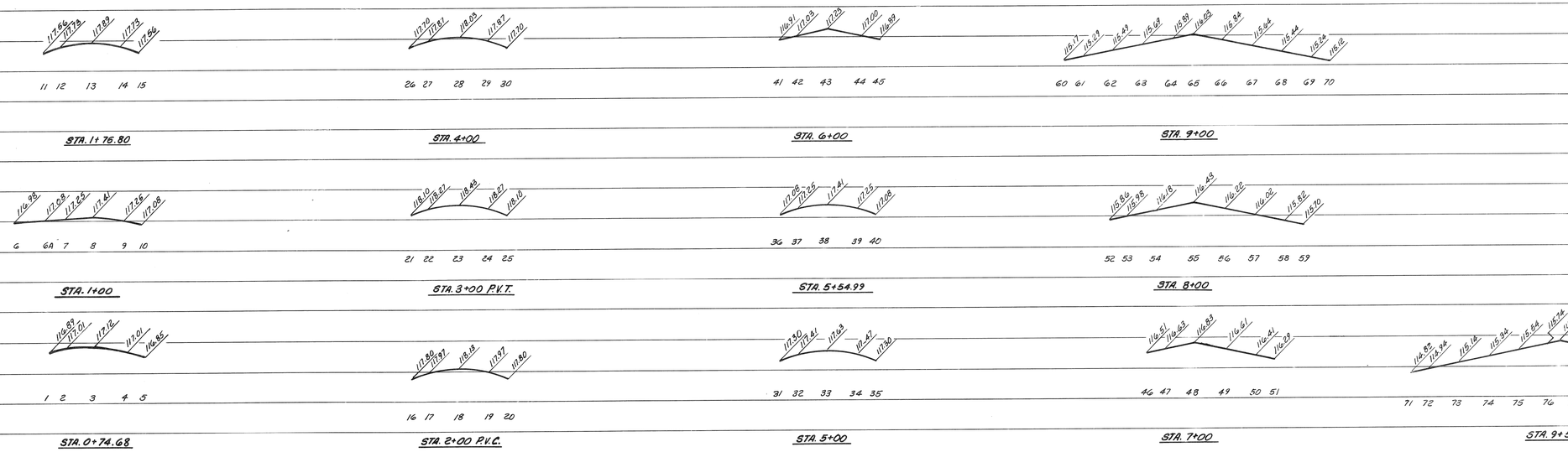

									REFERENCE DRAWINGS
COOR'D	DESCRIPTION					DR'N	CK'D	AP'VD	DATE

REVISIONS LOCATED BY COORDINATES ON SHEET

DESIGNED BY	M.E.L./L.S.
DRAWN BY	L.S.
TRACED BY	
CHECKED BY	B.P.

CITY OF DETROIT
JEFFERSON/CONNER INDUSTRIAL REVITALIZATION PROJECT
— MACK AVENUE IMPROVEMENTS —

STATE OF MICHIGAN — JULIAN C. MADISON — No. 14065 — REGISTERED PROFESSIONAL ENGINEER

MADISON MADISON INTERNATIONAL OF MICHIGAN
in association with
HNTB HOWARD NEEDLES TAMMEN & BERGENDOFF

ACCESS DRIVE DETAILED GRADES AND JOINT LAYOUT

SHEET	R21 OF 117 SHEETS
JOB NO.	8627
SCALE:	AS NOTED
DATE	SEPT. 3, 1987

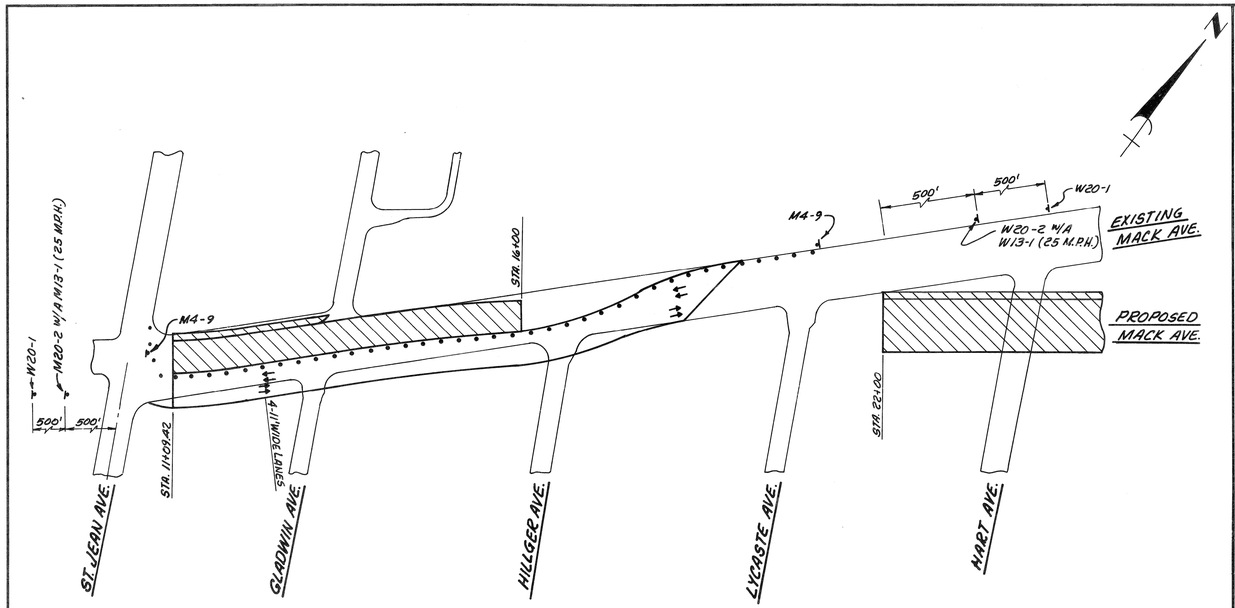

STAGE I

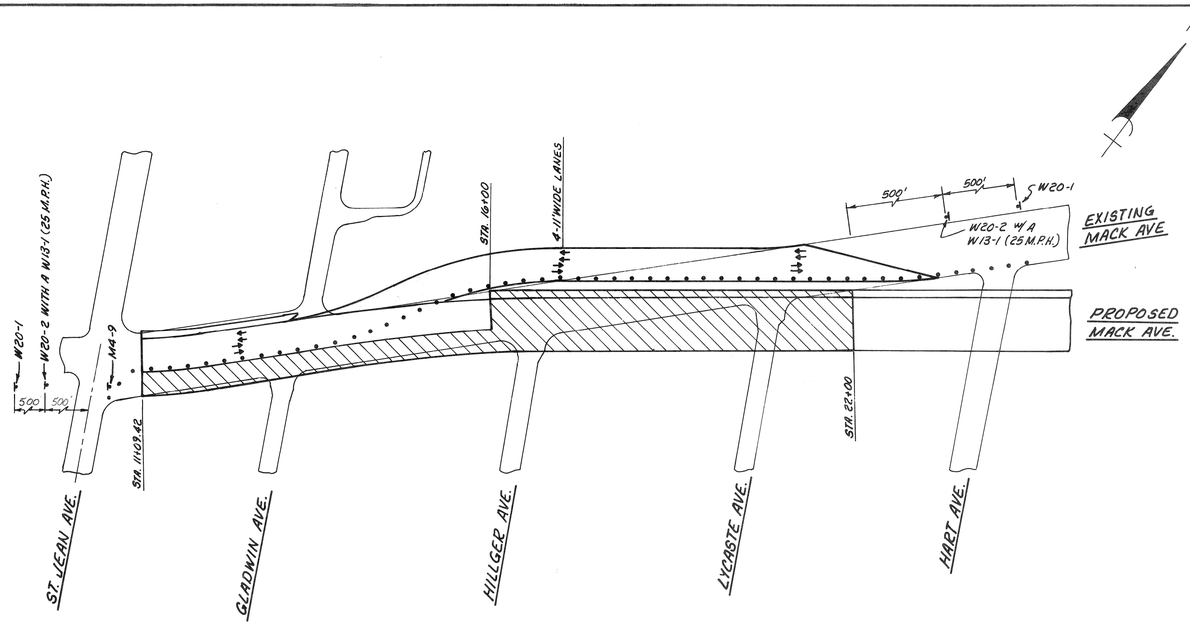

STAGE II

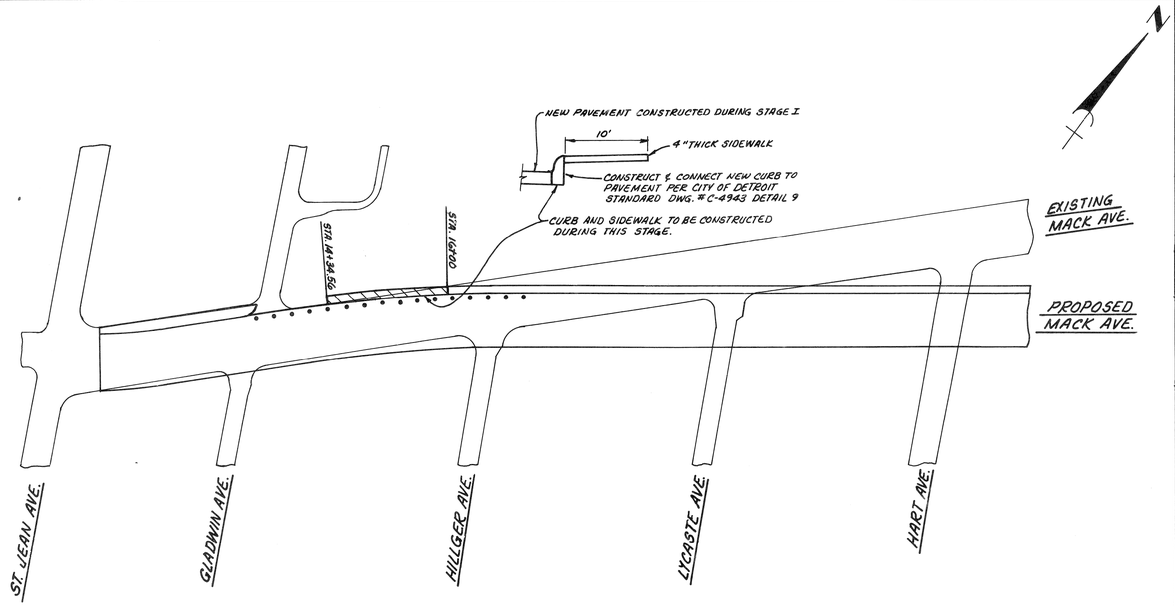

STAGE III

LEGEND

- MACK AVE CONSTRUCTED DURING STAGE I, STAGE II & STAGE III
- TEMPORARY ROAD CONSTRUCTED DURING STAGE I & STAGE II
- MACK AVE. CONSTRUCTED DURING STAGE I & STAGE II
- LIGHTED DRUM - PLACED @ 25' INTERVALS

NOTE:
TRAFFIC SHALL BE MAINTAINED BY THE CONTRACTOR IN ACCORDANCE WITH THE MICHIGAN MANUAL OF UNIFORM TRAFFIC CONTROL DEVICES 1981 EDITION & SECTION 1.04.04 & 6.31 OF THE MICHIGAN DEPARTMENT OF TRANSPORTATION'S STANDARD SPECIFICATIONS FOR HIGHWAY CONSTRUCTION, 1984 EDITION.

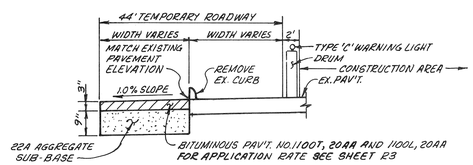

TEMPORARY ROAD CROSS-SECTION
NO SCALE:

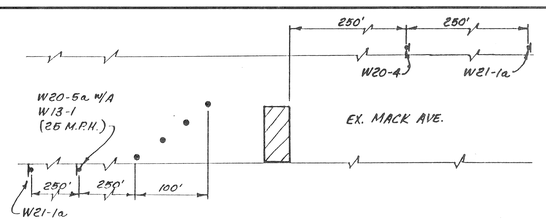

FOR UTILITY TRENCH (TYP.) NO SCALE

COOR'D	DESCRIPTION	DR'N	CK'D	AP'VD	DATE

REVISIONS LOCATED BY COORDINATES ON SHEET

REFERENCE DRAWINGS

DESIGNED BY	M.E.L.
DRAWN BY	L.S.
TRACED BY	
CHECKED BY	B.P.

CITY OF DETROIT
JEFFERSON/CONNER INDUSTRIAL REVITALIZATION PROJECT
— MACK AVENUE IMPROVEMENTS —

STATE OF MICHIGAN — JULIAN C. MADISON — 6/16/1987 — 14065 — REGISTERED PROFESSIONAL ENGINEER

MADISON MADISON INTERNATIONAL OF MICHIGAN
in association with
HNTB HOWARD NEEDLES TAMMEN & BERGENDOFF

TRAFFIC MAINTENANCE PLAN

SHEET R22 OF 117 SHEETS
JOB NO. 8627
SCALE: 1" = 100'
DATE SEPT. 3, 1987

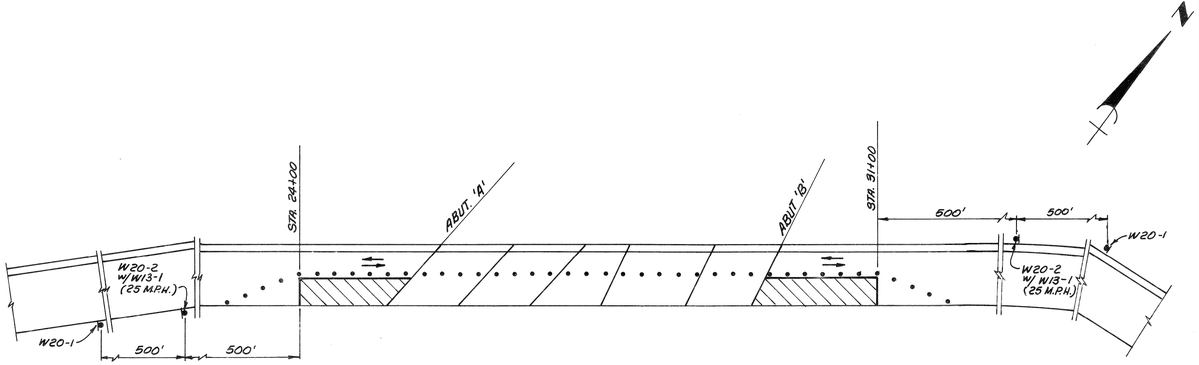

NOTE:
STAGES A & B ARE FOR PLACING "ADDITIONAL BITUMINOUS PAVEMENT" AND REPLACING BITUMINOUS PAVEMENT" WITH "CONCRETE PAVEMENT."

STAGE A

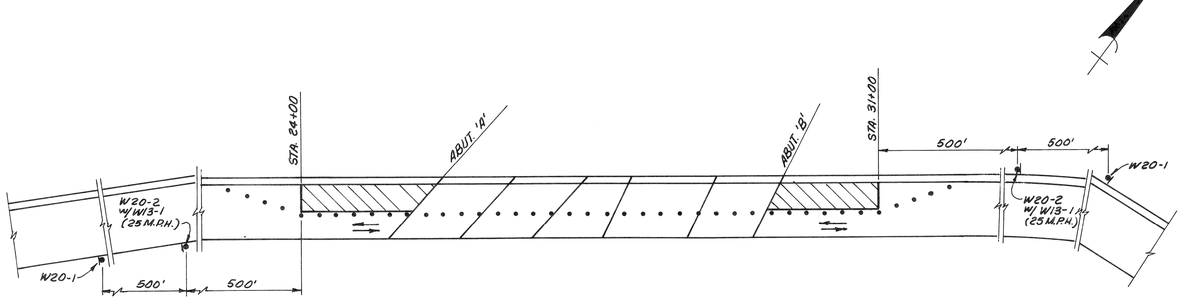

STAGE B

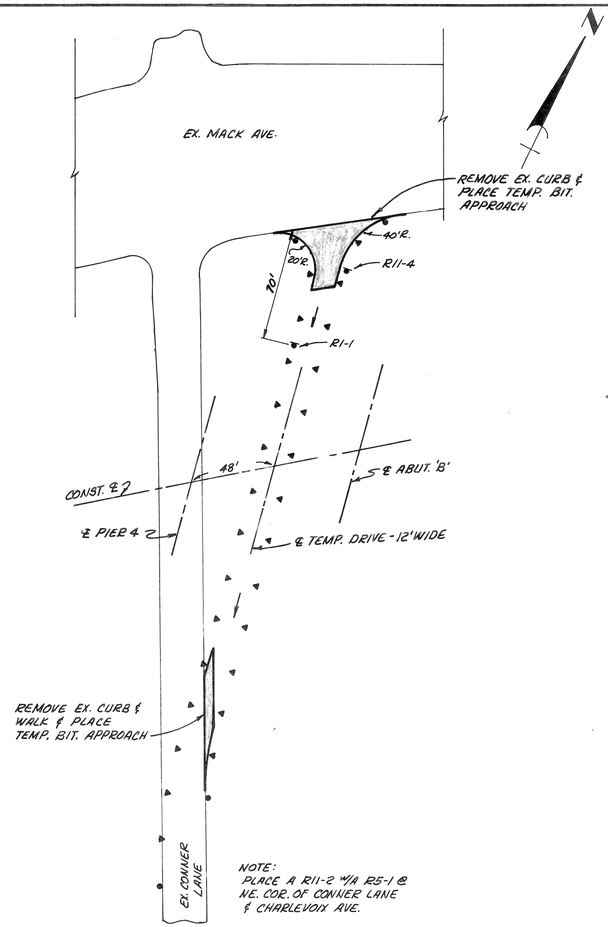

NOTE:
PLACE A R11-2 W/A R5-1 @ N.E. COR. OF CONNER LANE & CHARLEVOIX AVE.

TEMP. 12' WIDE DRIVE FOR BUDD CO. TRUCK TRAFFIC

SCALE: 1"=40'

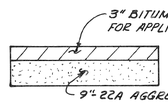

TEMP. DRIVE APPROACH X-SECTION

NO SCALE

LEGEND

- MACK AVE. CONSTRUCTED DURING STAGE A & STAGE B
- TEMPORARY DRIVE APPROACH
- LIGHTED DRUM
- REFLECTORIZED TRAFFIC CONES 28" HIGH @ 25' INTERVALS

COOR'D	DESCRIPTION	DR'N	CK'D	AP'VD	DATE
REVISIONS LOCATED BY COORDINATES ON SHEET					

REFERENCE DRAWINGS

DESIGNED BY	M.E.L./L.S.
DRAWN BY	L.S.
TRACED BY	
CHECKED BY	B.P.

CITY OF DETROIT
JEFFERSON/CONNER INDUSTRIAL REVITALIZATION PROJECT
— MACK AVENUE IMPROVEMENTS —

STATE OF MICHIGAN — JULIAN C. MADISON — No. 14065 — REGISTERED PROFESSIONAL ENGINEER

MADISON MADISON INTERNATIONAL OF MICHIGAN
in association with
HNTB HOWARD NEEDLES TAMMEN & BERGENDOFF

TRAFFIC MAINTENANCE PLAN

SHEET R22A OF 117 SHEETS
JOB NO. 8627
SCALE: 1" = 100'
DATE SEPT. 3, 1987

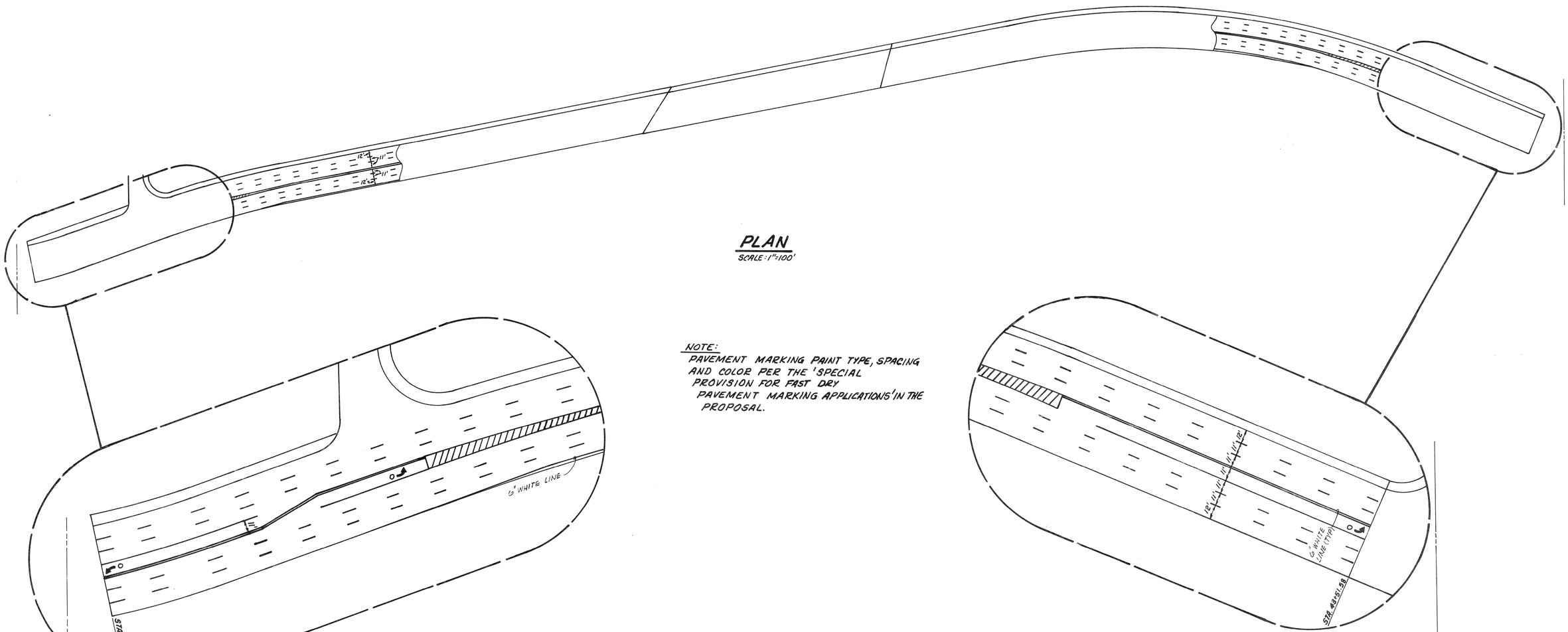

PLAN
SCALE: 1"=100'

NOTE:
PAVEMENT MARKING PAINT TYPE, SPACING AND COLOR PER THE 'SPECIAL PROVISION FOR FAST DRY PAVEMENT MARKING APPLICATIONS' IN THE PROPOSAL.

DETAIL 'A'
SCALE: 1"=40'

DETAIL 'B'
SCALE: 1"=40'

							REFERENCE DRAWINGS	DESIGNED BY	M.E.L.
								DRAWN BY	L.S.
								TRACED BY	
COOR'D	DESCRIPTION		DR'N	CK'D	AP'VD	DATE		CHECKED BY	B.P.
REVISIONS LOCATED BY COORDINATES ON SHEET									

CITY OF DETROIT
JEFFERSON/CONNER INDUSTRIAL REVITALIZATION PROJECT
— MACK AVENUE IMPROVEMENTS —

STATE OF MICHIGAN — JULIAN C. MADISON — No. 14065 — REGISTERED PROFESSIONAL ENGINEER

MADISON MADISON INTERNATIONAL OF MICHIGAN
in association with
HNTB HOWARD NEEDLES TAMMEN & BERGENDOFF

PAVEMENT MARKING LAYOUT

SHEET R23 OF 117 SHEETS
JOB NO. 8627
SCALE: AS NOTED
DATE SEPT. 3, 1987

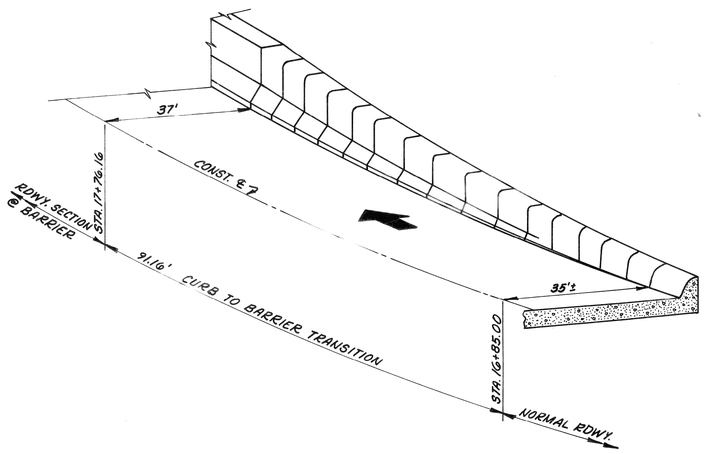

CURB TO BARRIER

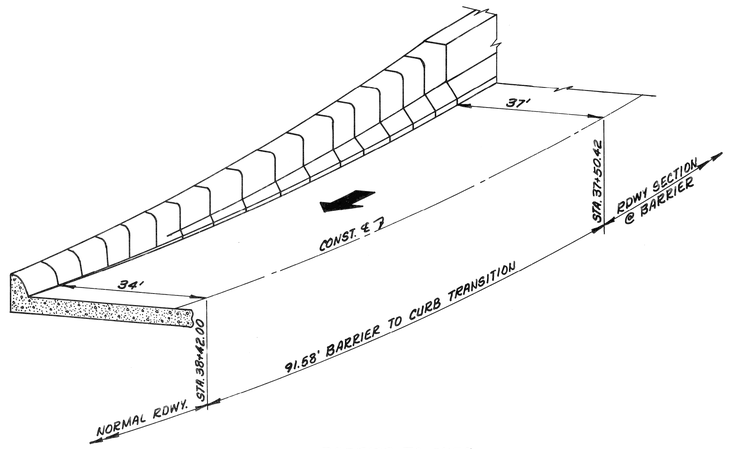

BARRIER TO CURB

TRANSITION DETAILS
NO SCALE

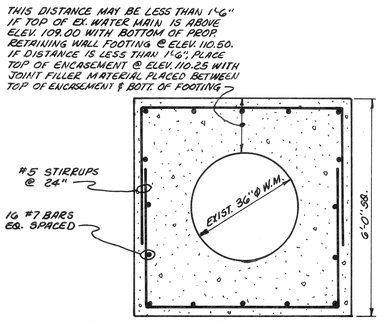

EXISTING 36" WATER MAIN CONC. ENCASEMENT DETAIL
NO SCALE

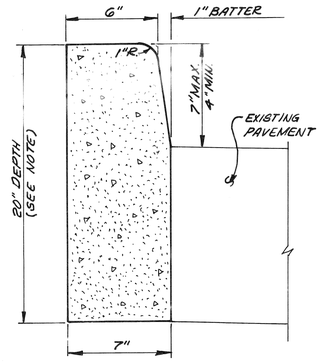

NOTE:
DEPTH OF CURB SHALL BE 20" UNLESS OTHERWISE DIRECTED BY THE ENGINEER.

CONTOUR OF CURB REPLACEMENT SHALL MATCH ADJACENT CURB. IN MOST INSTANCES, INTEGRAL CURB CAN REPLACE SEPERATE TYPE CURB; HOWEVER, THE UPPER CONTOUR MUST MATCH THE UPPER CONTOUR OF THE EXISTING CURB.

CONCRETE CURB DETAIL CD
NO SCALE

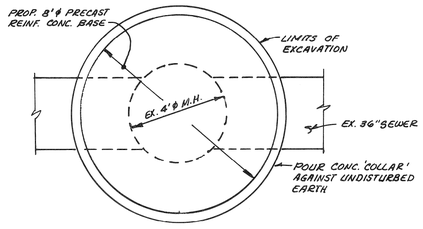

PLAN

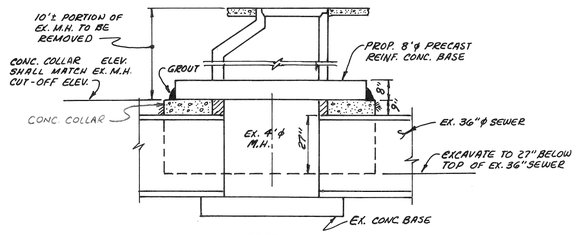

SECTION

NOTES:
1. CONC. 'COLLAR' SHALL BE GRADE 35S
2. BEFORE 8'ϕ PRECAST REINF. CONC. BASE IS PLACED OVER EX. M.H. ALL DEBRIS SHALL BE REMOVED FROM INSIDE THE EX. M.H. & 36" SEWER.
3. TOP OF CONC. COLLAR SHALL BE FLAT.
4. TOP OF REMAINING M.H. WALL SHALL BE GROUND FLAT.
5. GROUT SHALL BE PLACED BETWEEN THE CONC. COLLAR AND THE EX. M.H. & BETWEEN THE CONC. COLLAR & THE PRECAST REINF. CONC. BASE TO ENSURE A 'WATER-TIGHT' SEAL.

MANHOLE 'A' ABANDONMENT DETAIL
NO SCALE

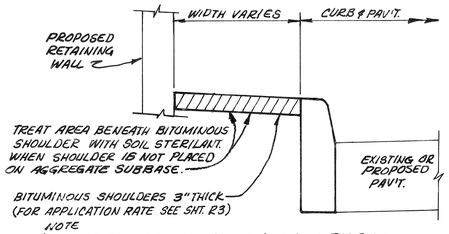

NOTE
1. WHERE CURB REMOVAL IS CALLED FOR ON THE PLANS, BITUMINOUS SHOULDERS SHALL MATCH EXISTING PAVEMENT.

3" BITUMINOUS SHOULDER DETAIL
NO SCALE

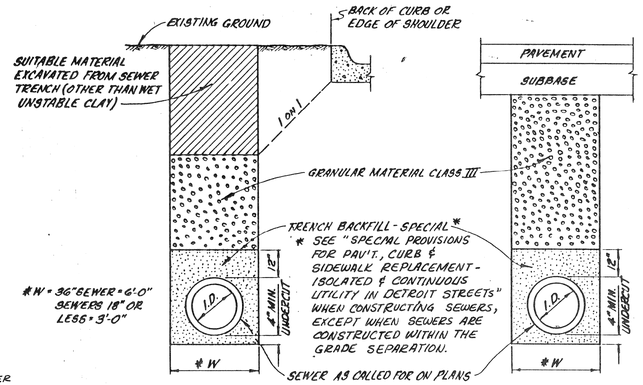

NOTE:
COMPACTION OF TRENCH BACKFILL SPECIAL AND GRANULAR MATERIAL CLASS III TO 95% OF MAXIMUM UNIT WEIGHT OF OPTIMUM WATER CONTENT.

TRENCH DETAIL

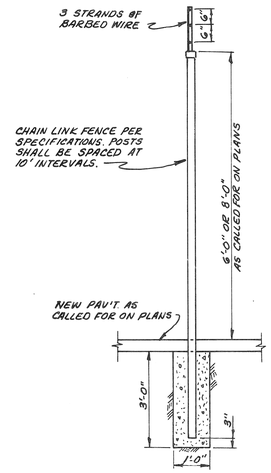

FENCE DETAIL
SCALE: 1/2"=1'-0"

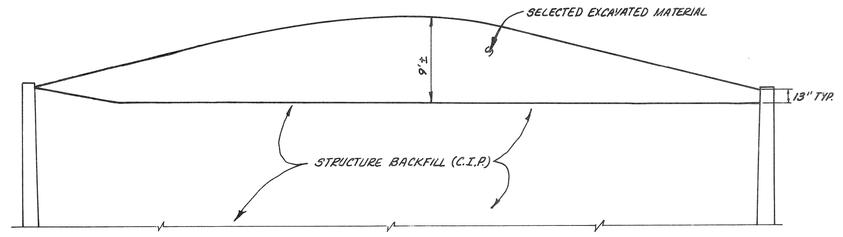

NOTE:
SOIL MOUND SHALL BE PLACED IMMEDIATELY AFTER THE RETAINING WALLS ARE CONSTRUCTED AND THE STRUCTURE BACKFILL IS INSTALLED. SOIL MOUND SHALL BE REMOVED JUST BEFORE ROAD PAVEMENT IS CONSTRUCTED.

TYPICAL CROSS-SECTION FOR SOIL MOUND STA. 22+50 TO STA. 24+51.56 & STA. 29+50.88 TO STA. 31+50
NO SCALE

													REFERENCE DRAWINGS	DESIGNED BY	M.E.L. / L.S.
														DRAWN BY	L.S.
														TRACED BY	
COOR'D	DESCRIPTION					DR'N	CK'D	AP'VD	DATE					CHECKED BY	B.P.
REVISIONS LOCATED BY COORDINATES ON SHEET															

CITY OF DETROIT
JEFFERSON/CONNER INDUSTRIAL REVITALIZATION PROJECT
— MACK AVENUE IMPROVEMENTS —

STATE OF MICHIGAN — JULIAN G. MADISON — REGISTERED PROFESSIONAL ENGINEER — NO. 14065

MADISON MADISON INTERNATIONAL OF MICHIGAN
in association with
HNTB HOWARD NEEDLES TAMMEN & BERGENDOFF

MISCELLANEOUS DETAILS

SHEET R24 OF 117 SHEETS
JOB NO. 8627
SCALE: AS NOTED
DATE SEPT. 3, 1987

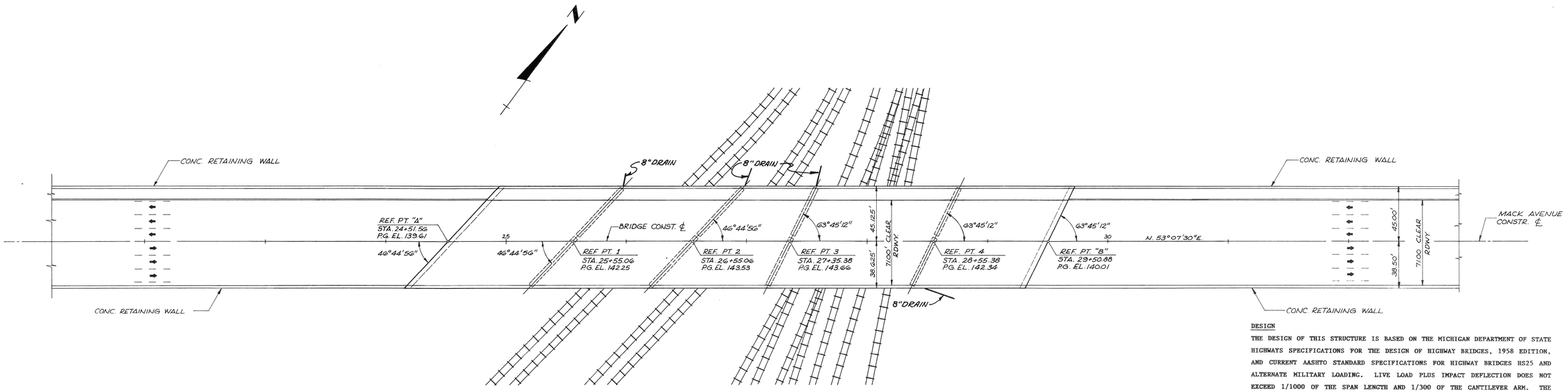

PLAN

SCALE: 1"=40'

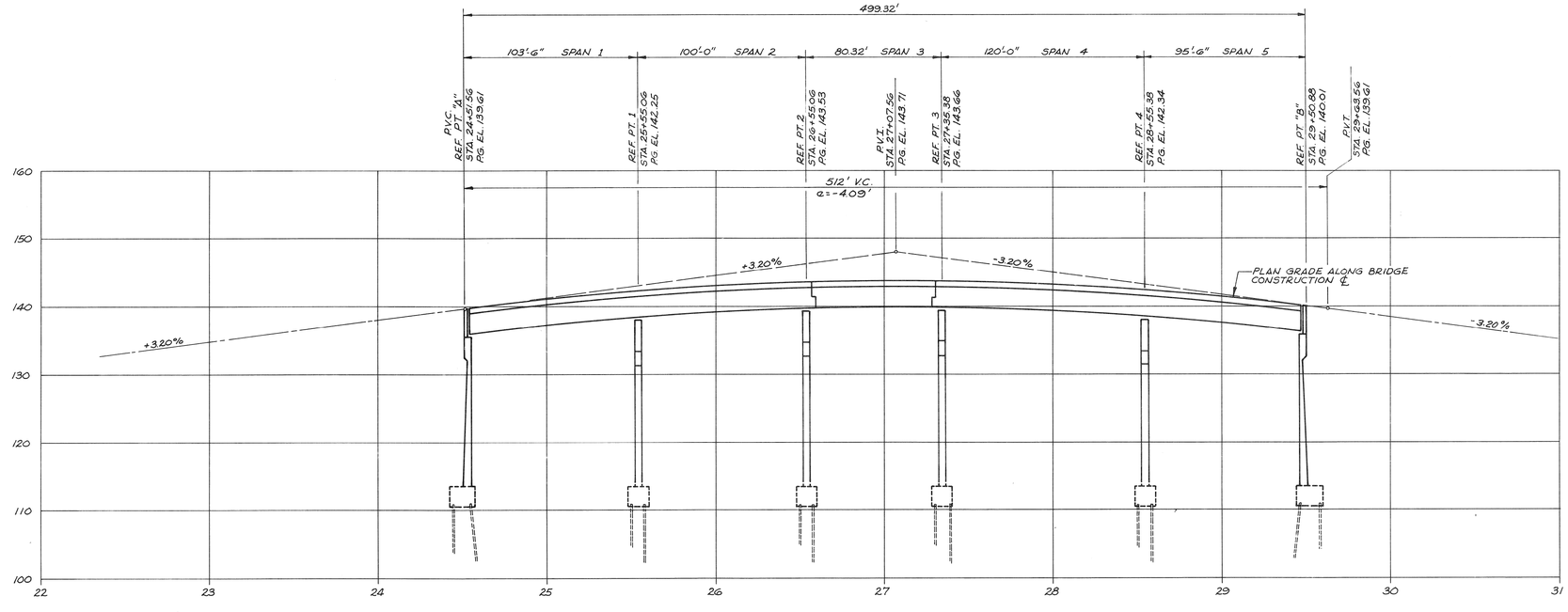

PROFILE

SCALE: HOR. 1"=40' VERT. 1"=10'

DESIGN

THE DESIGN OF THIS STRUCTURE IS BASED ON THE MICHIGAN DEPARTMENT OF STATE HIGHWAYS SPECIFICATIONS FOR THE DESIGN OF HIGHWAY BRIDGES, 1958 EDITION, AND CURRENT AASHTO STANDARD SPECIFICATIONS FOR HIGHWAY BRIDGES HS25 AND ALTERNATE MILITARY LOADING. LIVE LOAD PLUS IMPACT DEFLECTION DOES NOT EXCEED 1/1000 OF THE SPAN LENGTH AND 1/300 OF THE CANTILEVER ARM. THE SERVICE LOAD METHOD OF DESIGN WAS USED FOR THIS STRUCTURE. THE DESIGN PROVIDES FOR AN ADDITIONAL FUTURE WEARING SURFACE (NOT IN CONTRACT) OF 25 LBS. PER SQUARE FOOT OF ROADWAY. THE ALLOWABLE FATIGUE STRESS RANGE IS BASED ON A LOADING OF OVER 2,000,000 CYCLES.

THE DESIGN OF THE STRUCTURAL MEMBERS IS BASED ON MATERIAL OF THE FOLLOWING GRADES AND STRESSES:

CONCRETE GRADE 35S FOR SUBSTRUCTURE - Fć = 3,000 PSI, Fc = 1,200 PSI
CONCRETE GRADE 45D FOR SUPERSTRUCTURE - Fć = 4,000 PSI, Fc = 1,600 PSI
STEEL REINFORCEMENT, GRADE 60 - Fy = 60,000 PSI, Fs = 24,000 PSI
STRUCTURAL STEEL, ASTM A36 - Fy = 36,000 PSI, Fs = 20,000 PSI

CONSTRUCTION

THE CONSTRUCTION OF THE BRIDGE AND RETAINING WALLS SHALL BE IN ACCORDANCE WITH THE MICHIGAN DEPARTMENT OF TRANSPORTATION 1984 STANDARD SPECIFICATIONS FOR CONSTRUCTION. SPECIAL PROVISIONS, SUPPLEMENTAL SPECIFICATIONS, AND/OR THE CONTRACT DRAWINGS.

UTILITY LINES

THE LOCATION OF EXISTING UTILITIES ARE SHOWN IN THE ROADWAY PLANS. ALL UTILITIES INTERFERE WITH THE BRIDGE AND RETAINING WALL CONSTRUCTION WILL BE RELOCATED EXCEPT AT PEIR 4 WHERE THE EXISTING UNDERGROUND DETROIT EDISON CONDUIT, 12" SEWER AND 12" WATER MAIN ARE TO BE MAINTAINED. SPECIAL CARE AS NOTED IN THE PLANS SHALL BE TAKEN SO AS NOT TO DAMAGE THE UTILITIES DURING PIER CONSTRUCTION.

FOUNDATION DATA

ALL SUBSTRUCTURE ELEMENTS AND PARTS OF THE RETAINING WALLS SHALL BE FOUNDED ON HP14X89 PILES DRIVEN TO A MINIMUM BEARING CAPACITY OF 100 TONS PER PILE. PARTS OF THE RETAINING WALLS NOT SUPPORTED ON PILES SHALL BE FOUNDED ON SPREAD FOOTINGS WITH A DESIGN MAXIMUM AVERAGE FOUNDATION PRESSURE OF 2,700 PSF AND A MAXIMUM FOUNDATION PRESSURE OF 3,500 PSF. THE CONTRACTOR SHALL REMOVE, AS DIRECTED BY THE ENGINEER, FILL MATERIAL UNDER THE PROPOSED SPREAD TYPE RETAINING WALL FOOTINGS. REMOVED MATERIAL LESS THAN 1-FT. IN THICKNESS SHALL BE REPLACED WITH SUBFOOTING CONCRETE AND REMOVED MATERIAL GREATER THAN 1-FT. IN THICKNESS SHALL BE REPLACED WITH STRUCTURE EMBANKMENT AND 3-1/2 IN. MINIMUM OF SUBFOOTING CONCRETE. ALL SPREAD TYPE AND PILE SUPPORTED FOOTINGS SHALL HAVE A 3-1/2 IN. MINIMUM SUBFOOTING OF SUBFOOTING CONCRETE.

CONCRETE CORNERS

ALL EXPOSED CONCRETE CORNERS SHOWN SQUARE ON THE PLANS SHALL BE BEVELED WITH 1/2-IN. TRIANGULAR MOLDINGS EXCEPT AS OTHERWISE NOTED.

DIMENSIONS

UNLESS SHOWN OTHERWISE ALL DIMENSIONS ARE EITHER HORIZONTAL OR VERTICAL AND MEASURED AT 60 DEGREES FAHRENHEIT.

COOR'D	DESCRIPTION	DR'N	CK'D	AP'VD	DATE

REVISIONS LOCATED BY COORDINATES ON SHEET

REFERENCE DRAWINGS

DESIGNED BY	R.J.C.
DRAWN BY	K.C.H./L.S.
TRACED BY	
CHECKED BY	B.P.

CITY OF DETROIT
JEFFERSON/CONNER INDUSTRIAL REVITALIZATION PROJECT
— MACK AVENUE IMPROVEMENTS —

STATE OF MICHIGAN — JULIAN C. MADISON — ENGINEER — No. 14065 — REGISTERED PROFESSIONAL ENGINEER

MADISON MADISON INTERNATIONAL OF MICHIGAN
in association with
HNTB HOWARD NEEDLES TAMMEN & BERGENDOFF

MACK AVENUE OVER CONRAIL

GENERAL PLAN OF SITE

SHEET 51 OF 117 SHEETS
JOB NO. 8627
SCALE: AS NOTED
DATE SEPT. 3, 1987

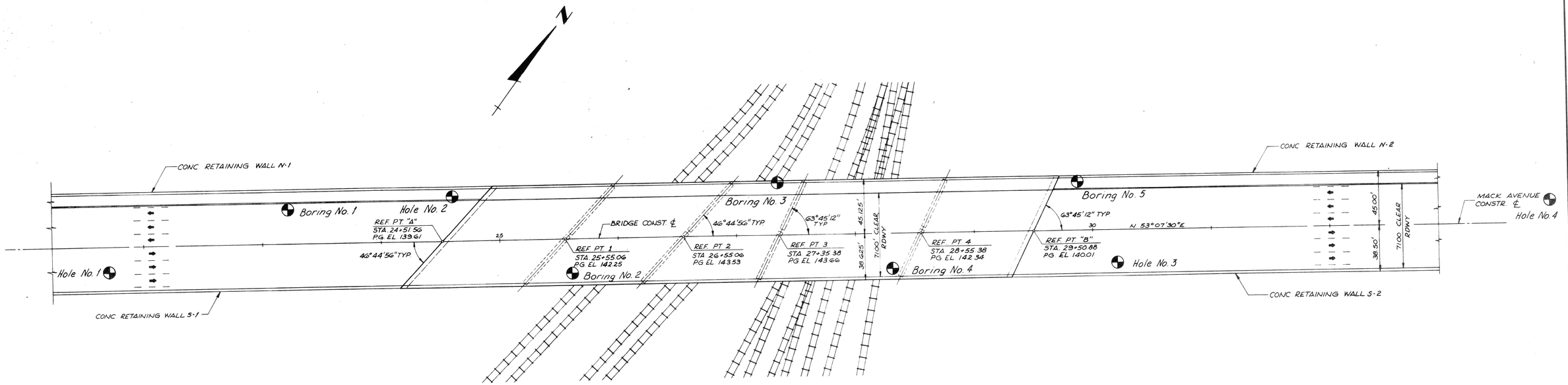

PLAN

SCALE: 1"=40'

40 0 40 80

SCALE IN FEET

NOTE:
Subsurface information shown on this drawing was obtained solely for use in establishing design controls for the project. The accuracy of this information is not guaranteed and it is not to be construed as part of the plans governing the construction of this project.

COOR'D	DESCRIPTION	DR'N	CK'D	AP'VD	DATE

REVISIONS LOCATED BY COORDINATES ON SHEET

REFERENCE DRAWINGS

DESIGNED BY	
DRAWN BY	W.A.D.
TRACED BY	C.G.L.
CHECKED BY	P.R.M.

CITY OF DETROIT
JEFFERSON/CONNER INDUSTRIAL REVITALIZATION PROJECT
— MACK AVENUE IMPROVEMENTS —

MADISON MADISON INTERNATIONAL OF MICHIGAN
in association with
HNTB HOWARD NEEDLES TAMMEN & BERGENDOFF

MACK AVENUE OVER CONRAIL

BORING LOCATION PLAN

SHEET S-2 OF 117 SHEETS
JOB NO. 8627
SCALE: AS SHOWN
DATE SEPTEMBER 3, 1987

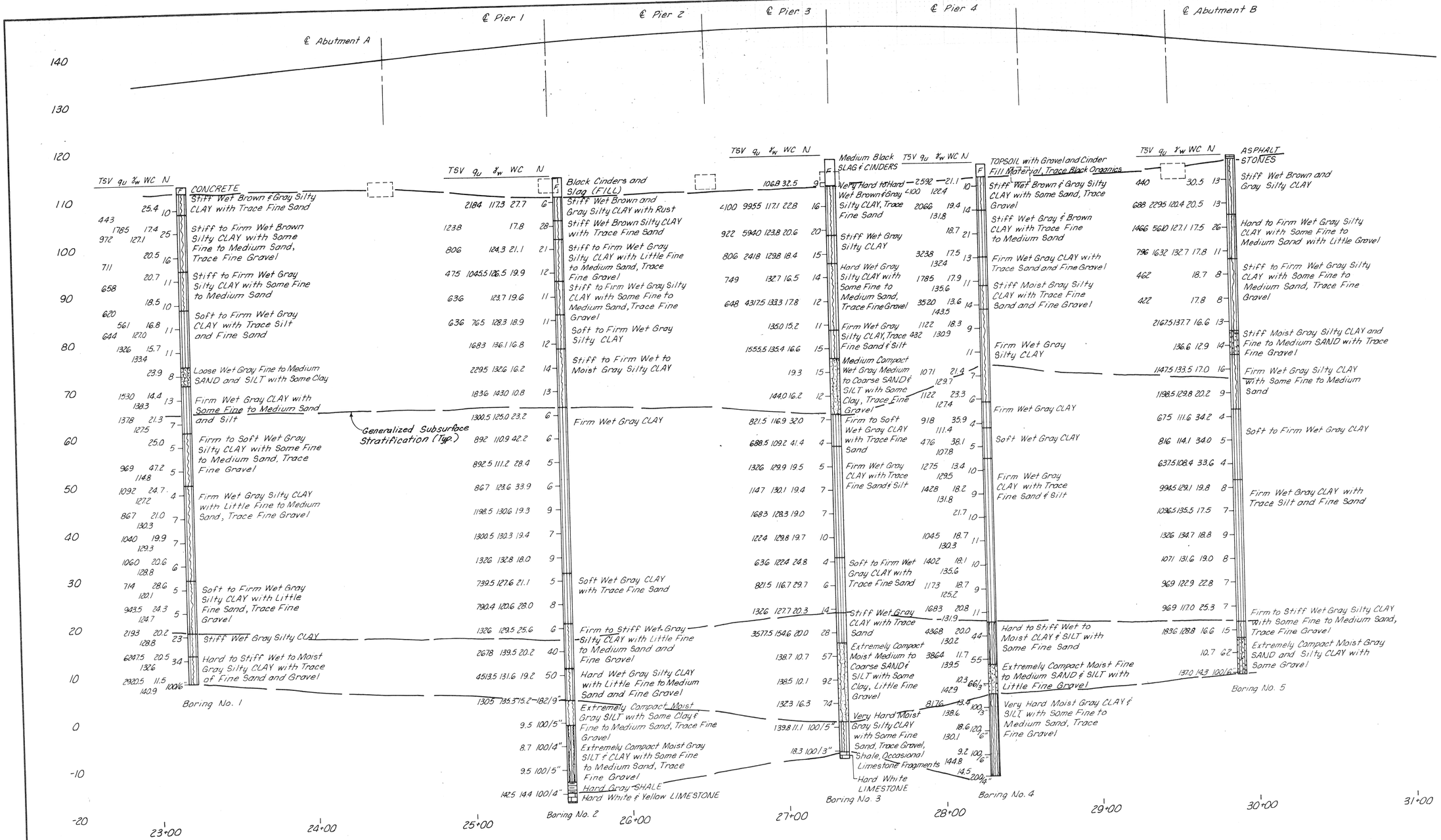

HORIZONTAL 30 0 30 60
VERTICAL 10 0 10 20
SCALE IN FEET

NOTE:
See General Note and Legend Sheet.

NOTE:
Subsurface information shown on this drawing was obtained solely for use in establishing design controls for the project. The accuracy of this information is not guaranteed and it is not to be construed as part of the plans governing the construction of this project.

COORD	DESCRIPTION	DR'N	CK'D	AP'VD	DATE

REVISIONS LOCATED BY COORDINATES ON SHEET

REFERENCE DRAWINGS

DESIGNED BY	
DRAWN BY	W.A.D.
TRACED BY	C.G.L.
CHECKED BY	P.R.M.

CITY OF DETROIT
JEFFERSON/CONNER INDUSTRIAL REVITALIZATION PROJECT
— MACK AVENUE IMPROVEMENTS —

MADISON MADISON INTERNATIONAL OF MICHIGAN
in association with
HNTB HOWARD NEEDLES TAMMEN & BERGENDOFF

MACK AVENUE OVER CONRAIL

STRUCTURE
ELEVATION PLOT OF BORINGS

SHEET S-3 OF 117 SHEETS
JOB NO. 8627
SCALE: AS SHOWN
DATE SEPTEMBER 3, 1987

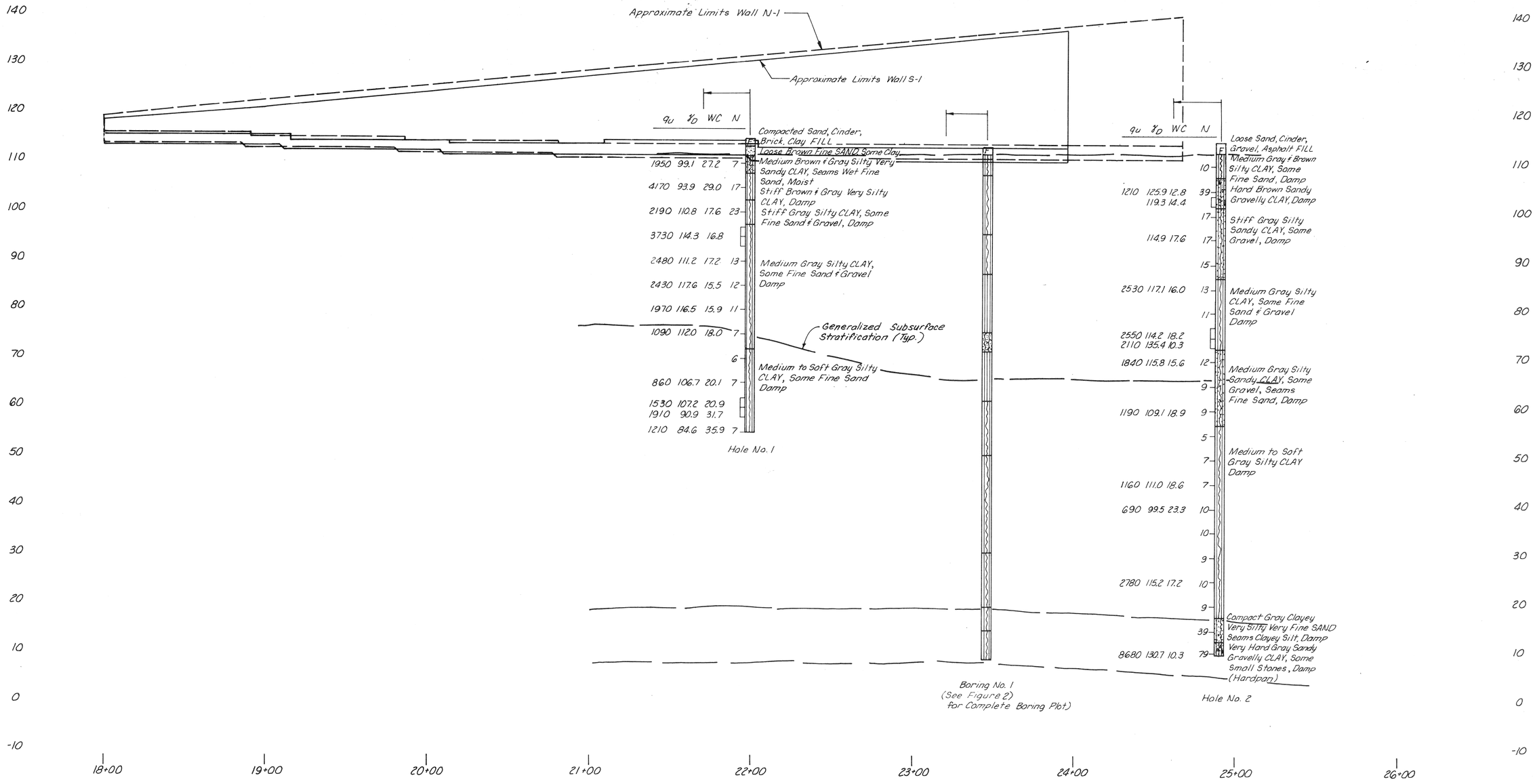

NOTE:
See General Note and Legend Sheet.

HORIZONTAL 30 0 30 60
VERTICAL 10 0 10 20
SCALE IN FEET

NOTE:
Subsurface information shown on this drawing was obtained solely for use in establishing design controls for the project. The accuracy of this information is not guaranteed and it is not to be construed as part of the plans governing the construction of this project.

COOR'D	DESCRIPTION	DR'N	CK'D	AP'VD	DATE
REVISIONS LOCATED BY COORDINATES ON SHEET					

REFERENCE DRAWINGS

DESIGNED BY	
DRAWN BY	W.A.D.
TRACED BY	C.G.L.
CHECKED BY	P.R.M.

CITY OF DETROIT
JEFFERSON/CONNER INDUSTRIAL REVITALIZATION PROJECT
— MACK AVENUE IMPROVEMENTS —

MADISON MADISON INTERNATIONAL OF MICHIGAN
in association with
HNTB HOWARD NEEDLES TAMMEN & BERGENDOFF

MACK AVENUE OVER CONRAIL

RETAINING WALLS S-1 & N-1
ELEVATION PLOT OF BORINGS

SHEET 5-4 OF 117 SHEETS
JOB NO. 8627
SCALE: AS SHOWN
DATE SEPTEMBER 3, 1987

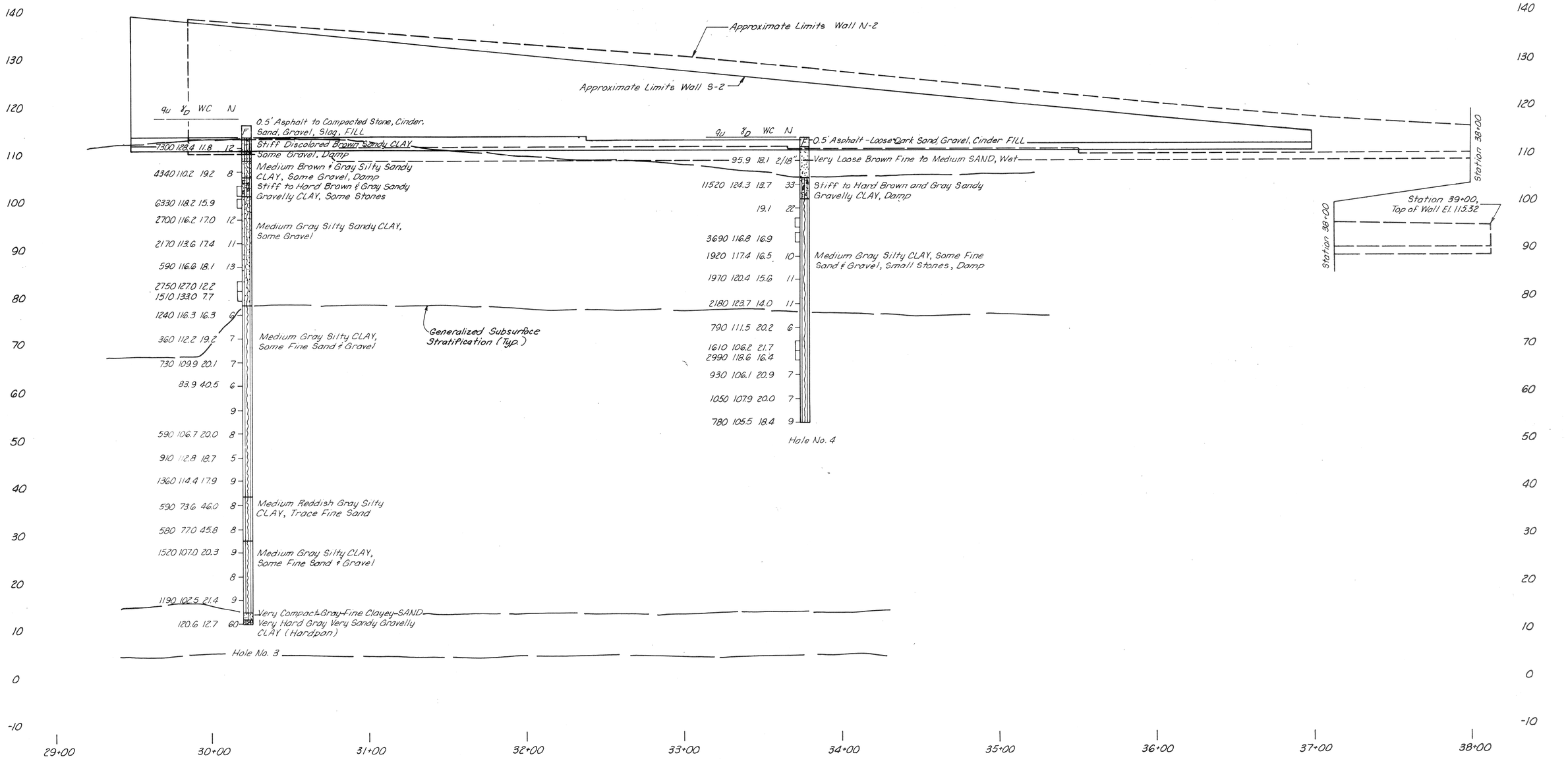

HORIZONTAL 30 0 30 60
VERTICAL 10 0 10 20
SCALE IN FEET

NOTE:
See General Note and Legend Sheet.

NOTE:
Subsurface information shown on this drawing was obtained solely for use in establishing design controls for the project. The accuracy of this information is not guaranteed and it is not to be construed as part of the plans governing the construction of this project.

COOR'D	DESCRIPTION	DR'N	CK'D	AP'VD	DATE
REVISIONS LOCATED BY COORDINATES ON SHEET					

REFERENCE DRAWINGS

DESIGNED BY	
DRAWN BY	W.A.D.
TRACED BY	C.G.L.
CHECKED BY	P.R.M.

CITY OF DETROIT
JEFFERSON/CONNER INDUSTRIAL REVITALIZATION PROJECT
— MACK AVENUE IMPROVEMENTS —

MADISON MADISON INTERNATIONAL OF MICHIGAN
in association with
HNTB HOWARD NEEDLES TAMMEN & BERGENDOFF

MACK AVENUE OVER CONRAIL
RETAINING WALLS S-2 & N-2
ELEVATION PLOT OF BORINGS

SHEET 5-5 OF 117 SHEETS
JOB NO. 8627
SCALE: AS SHOWN
DATE SEPTEMBER 3, 1987

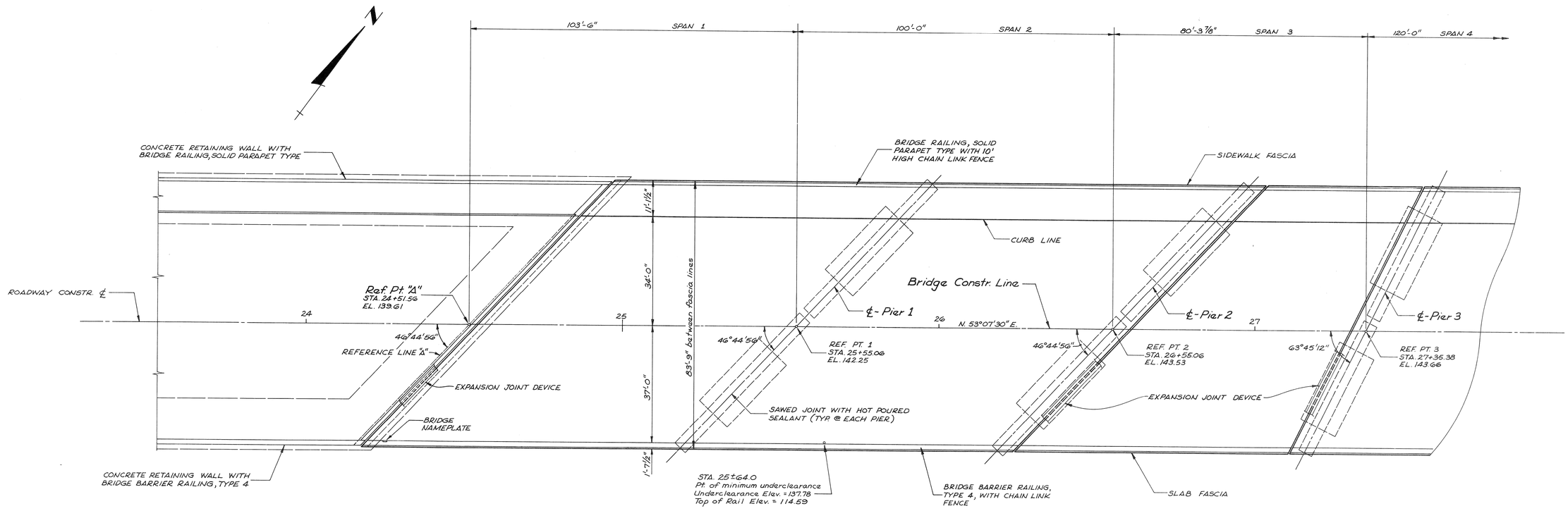

PLAN

SCALE: 1/16"=1'-0"

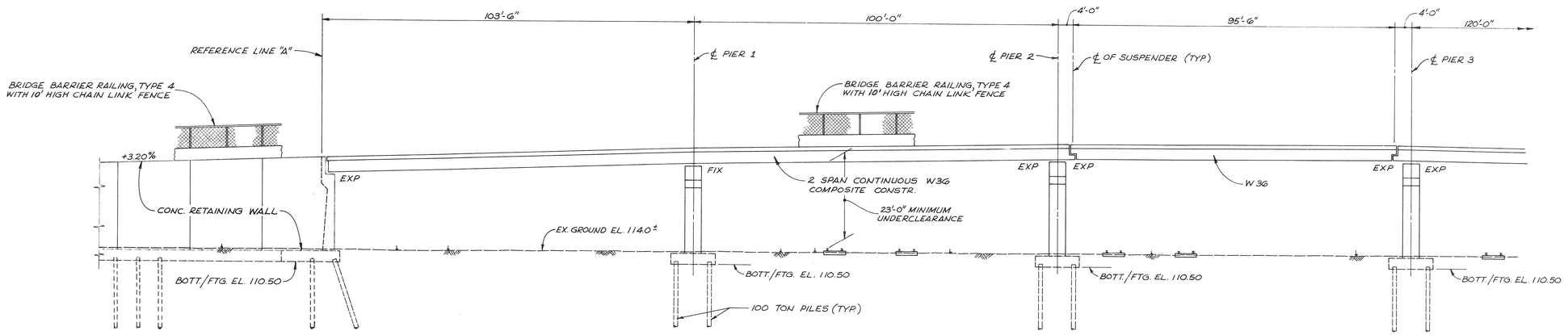

ELEVATION

SCALE: 1/16"=1'-0"

COOR'D	DESCRIPTION	DR'N	CK'D	AP'VD	DATE
REVISIONS LOCATED BY COORDINATES ON SHEET					

REFERENCE DRAWINGS

DESIGNED BY	R.J.C.
DRAWN BY	K.C.H./L.S.
TRACED BY	
CHECKED BY	B.P.

CITY OF DETROIT
JEFFERSON/CONNER INDUSTRIAL REVITALIZATION PROJECT
— MACK AVENUE IMPROVEMENTS —

REGISTERED STATE OF MICHIGAN J.C. JANSON No. 14065 PROFESSIONAL ENGINEER

MADISON MADISON INTERNATIONAL OF MICHIGAN
in association with
HNTB HOWARD NEEDLES TAMMEN & BERGENDOFF

MACK AVENUE OVER CONRAIL

GENERAL PLAN OF STRUCTURE

SHEET S6 OF 117 SHEETS
JOB NO. 8627
SCALE: AS NOTED
DATE SEPT. 3, 1987

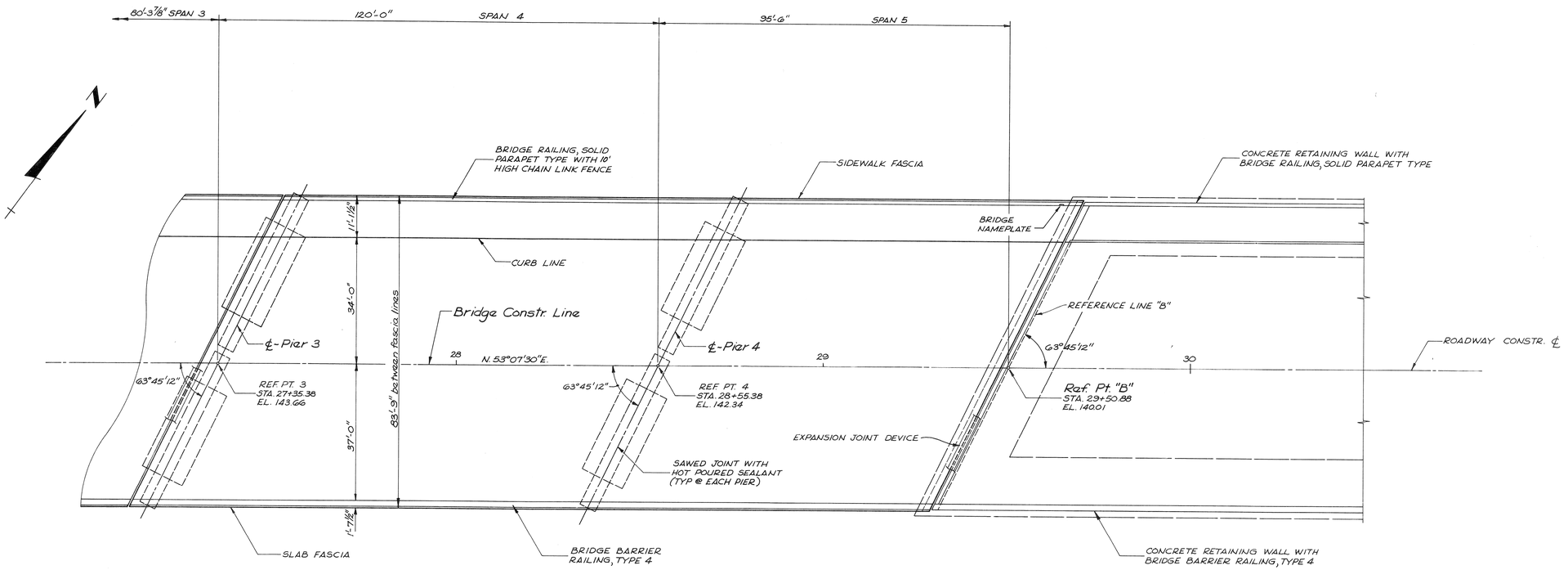

PLAN
SCALE: 1/16"=1'-0"

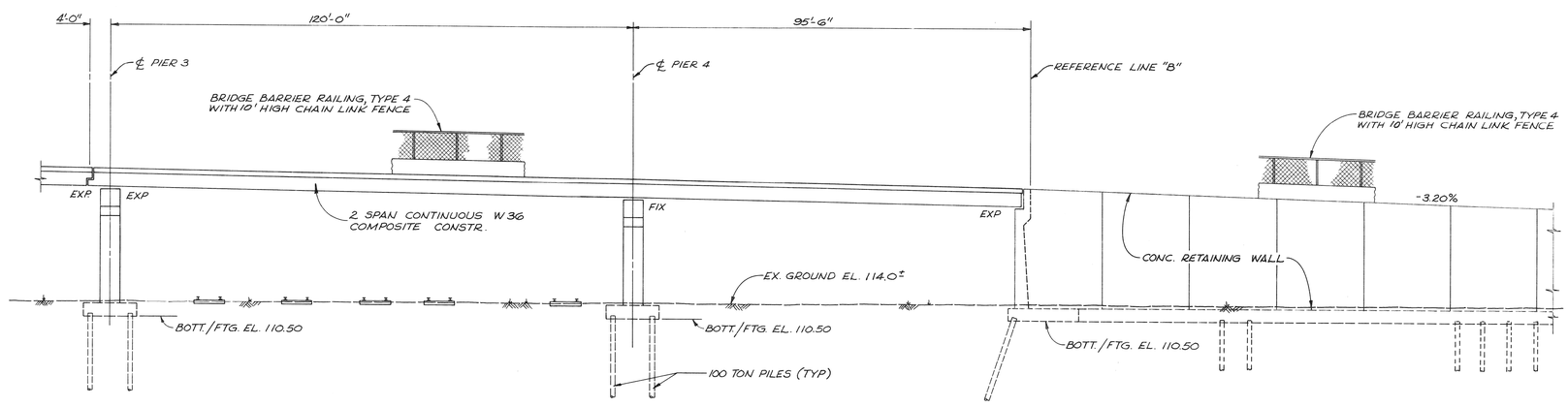

ELEVATION
SCALE: 1/16"=1'-0"

COOR'D	DESCRIPTION	DR'N	CK'D	AP'VD	DATE
REVISIONS LOCATED BY COORDINATES ON SHEET					

REFERENCE DRAWINGS

DESIGNED BY	R.J.C.
DRAWN BY	K.C.H./L.S.
TRACED BY	
CHECKED BY	B.P.

CITY OF DETROIT
JEFFERSON/CONNER INDUSTRIAL REVITALIZATION PROJECT
— MACK AVENUE IMPROVEMENTS —

STATE OF MICHIGAN — ETHAN C. MADISON — KLAWLER — No. 14065 — REGISTERED PROFESSIONAL ENGINEER

MADISON MADISON INTERNATIONAL OF MICHIGAN
in association with
HNTB HOWARD NEEDLES TAMMEN & BERGENDOFF

MACK AVENUE OVER CONRAIL

GENERAL PLAN OF STRUCTURE

SHEET 57 OF 117 SHEETS
JOB NO. 8627
SCALE: AS NOTED
DATE SEPT. 3,1987

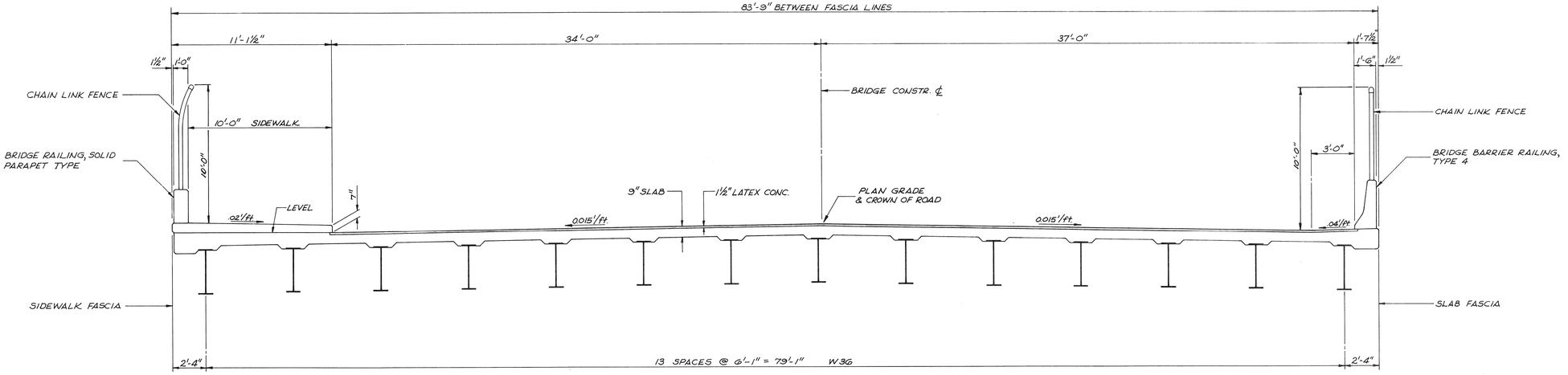

TYPICAL DECK SECTION

SCALE: 1/4" = 1'-0"

COOR'D	DESCRIPTION	DR'N	CK'D	AP'VD	DATE
REVISIONS LOCATED BY COORDINATES ON SHEET					

REFERENCE DRAWINGS

DESIGNED BY	R.J.C.
DRAWN BY	K.C.H./L.S.
TRACED BY	
CHECKED BY	B.P.

CITY OF DETROIT
JEFFERSON/CONNER INDUSTRIAL REVITALIZATION PROJECT
— MACK AVENUE IMPROVEMENTS —

STATE OF MICHIGAN — REGISTERED PROFESSIONAL ENGINEER — JULIAN C. MADISON — LIC. NO. 14065

MADISON MADISON INTERNATIONAL OF MICHIGAN
in association with
HNTB HOWARD NEEDLES TAMMEN & BERGENDOFF

MACK AVENUE OVER CONRAIL

GENERAL PLAN OF STRUCTURE

SHEET S8 OF 117 SHEETS
JOB NO. 8627
SCALE: AS NOTED
DATE SEPT. 3, 1987

1 2 3 4 5 6 7 8 9 10 11

A B C D E F G

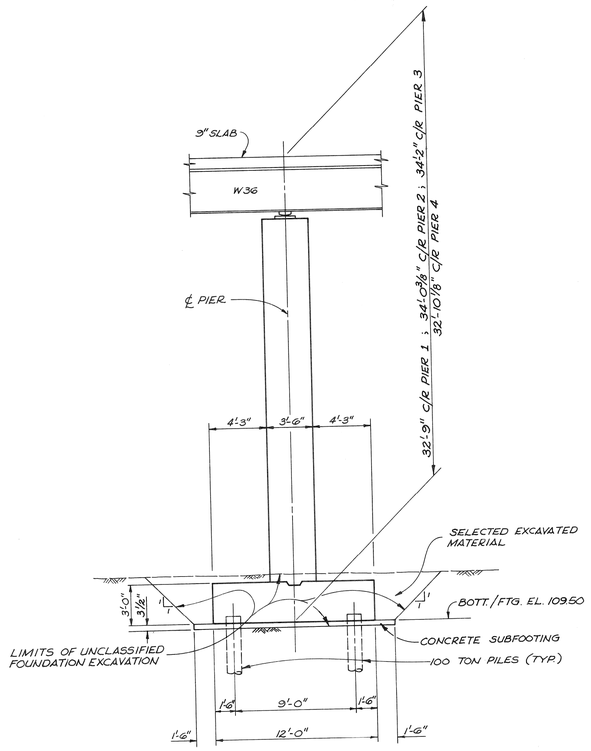

TYPICAL PIER SECTION

SCALE: 3/16"=1'-0"

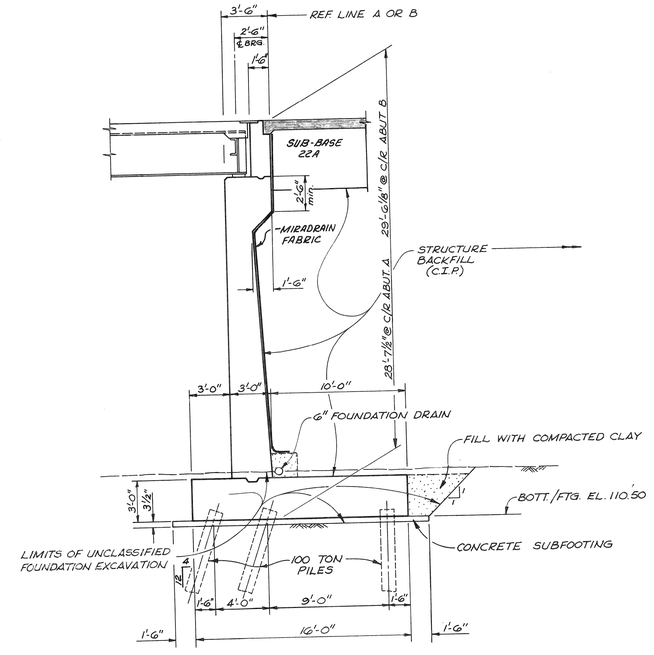

TYPICAL ABUTMENT SECTION

SCALE: 3/16"=1'-0"

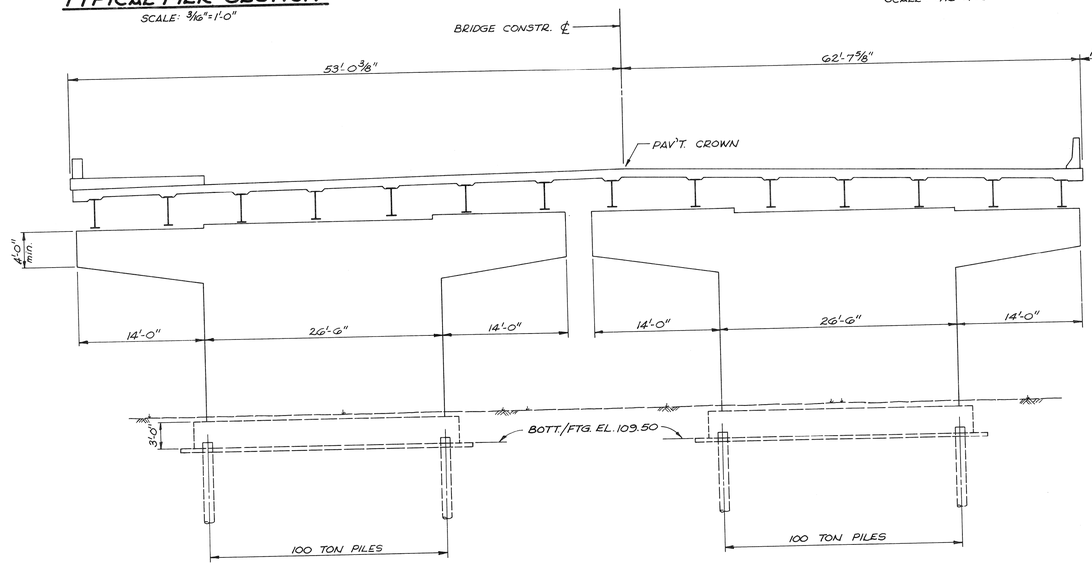

TYPICAL ELEVATION PIERS 1,2

SCALE: 1/8"=1'-0"

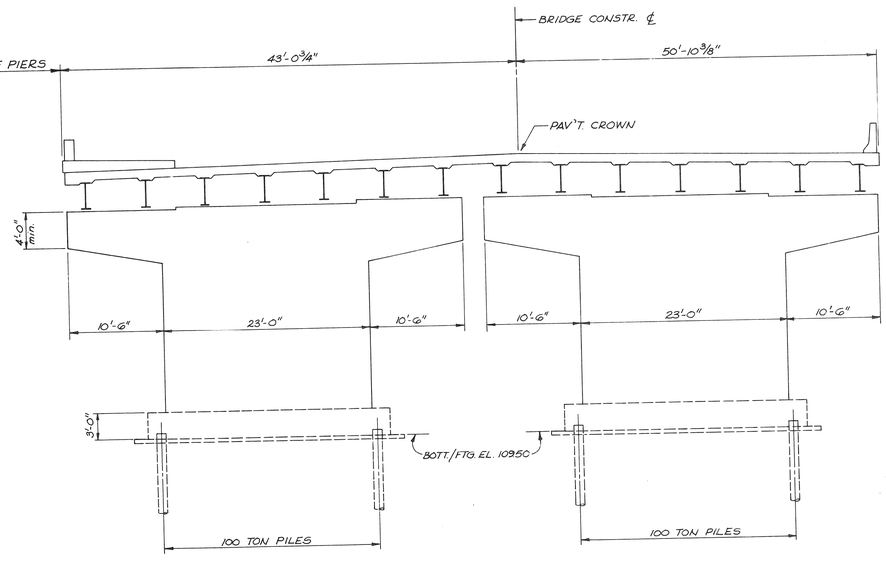

TYPICAL ELEVATION PIERS 3,4

SCALE: 1/8"=1'-0"

COOR'D	DESCRIPTION	DR'N	CK'D	AP'VD	DATE

REVISIONS LOCATED BY COORDINATES ON SHEET

REFERENCE DRAWINGS

DESIGNED BY	R.J.C.
DRAWN BY	K.C.H. / L.S.
TRACED BY	
CHECKED BY	B.P.

CITY OF DETROIT
JEFFERSON/CONNER INDUSTRIAL REVITALIZATION PROJECT
— MACK AVENUE IMPROVEMENTS —

REGISTERED PROFESSIONAL ENGINEER — STATE OF MICHIGAN — JULIAN C. MADISON — No. 14065

MADISON MADISON INTERNATIONAL OF MICHIGAN
in association with
HNTB HOWARD NEEDLES TAMMEN & BERGENDOFF

MACK AVENUE OVER CONRAIL

GENERAL PLAN OF STRUCTURE

SHEET S9 OF 117 SHEETS
JOB NO. 8627
SCALE: AS NOTED
DATE SEPT. 3, 1987

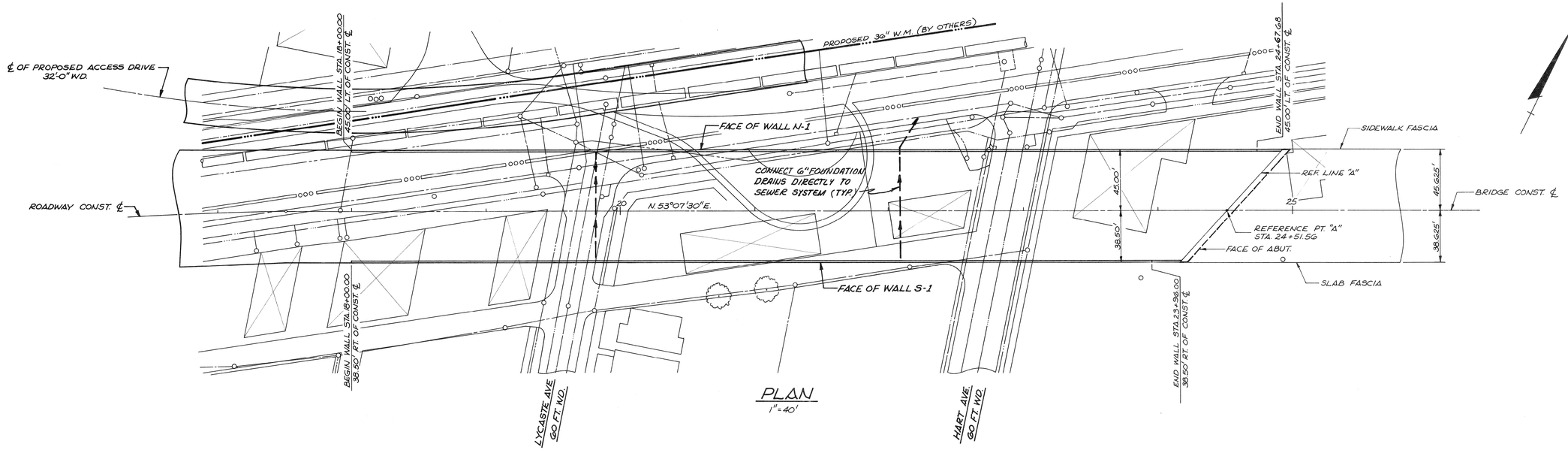

PLAN
1"=40'

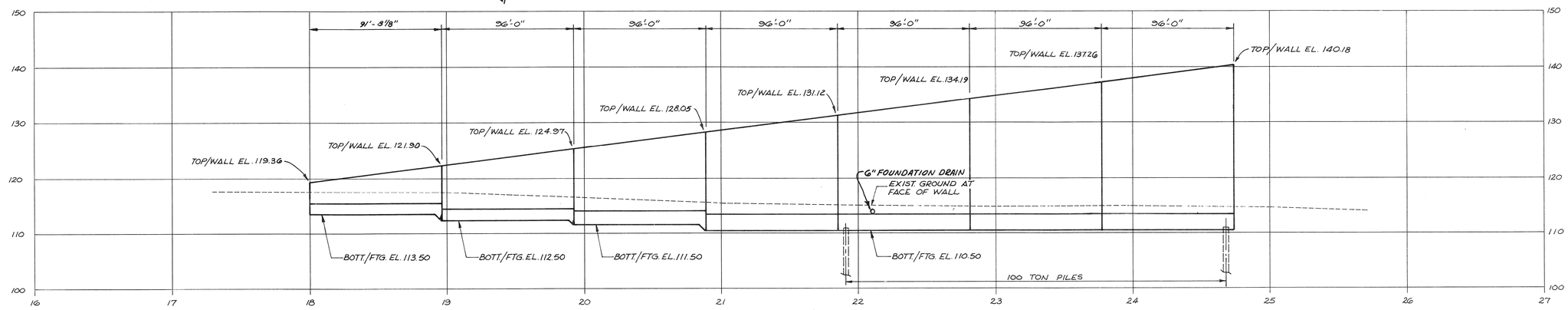

WALL N-1
HOR. - 1"=40'
VERT. - 1"=10'

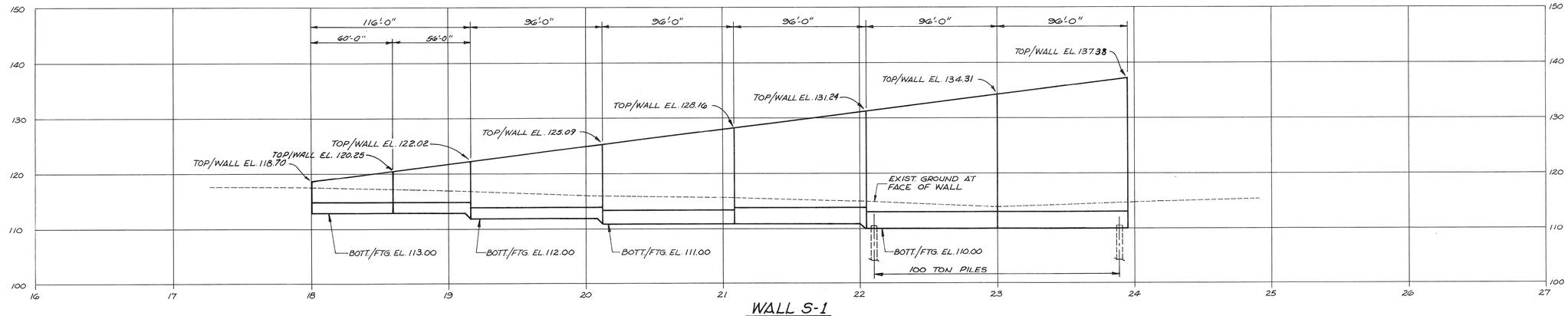

WALL S-1
HOR. - 1"=40'
VERT. - 1"=10'

COOR'D	DESCRIPTION	DR'N	CK'D	AP'VD	DATE
REVISIONS LOCATED BY COORDINATES ON SHEET					

REFERENCE DRAWINGS

DESIGNED BY	R.J.C./K.C.H.
DRAWN BY	K.C.H./L.S.
TRACED BY	
CHECKED BY	B.P.

CITY OF DETROIT
JEFFERSON/CONNER INDUSTRIAL REVITALIZATION PROJECT
— MACK AVENUE IMPROVEMENTS —

STATE OF MICHIGAN — JULIAN C. MADISON — ENGINEER — REGISTERED PROFESSIONAL ENGINEER — No. 14065

MADISON MADISON INTERNATIONAL OF MICHIGAN
in association with
HNTB HOWARD NEEDLES TAMMEN & BERGENDOFF

RETAINING WALLS

GENERAL PLAN OF STRUCTURE

SHEET S10 OF 117 SHEETS
JOB NO. 8627
SCALE: AS NOTED
DATE SEPT. 3, 1987

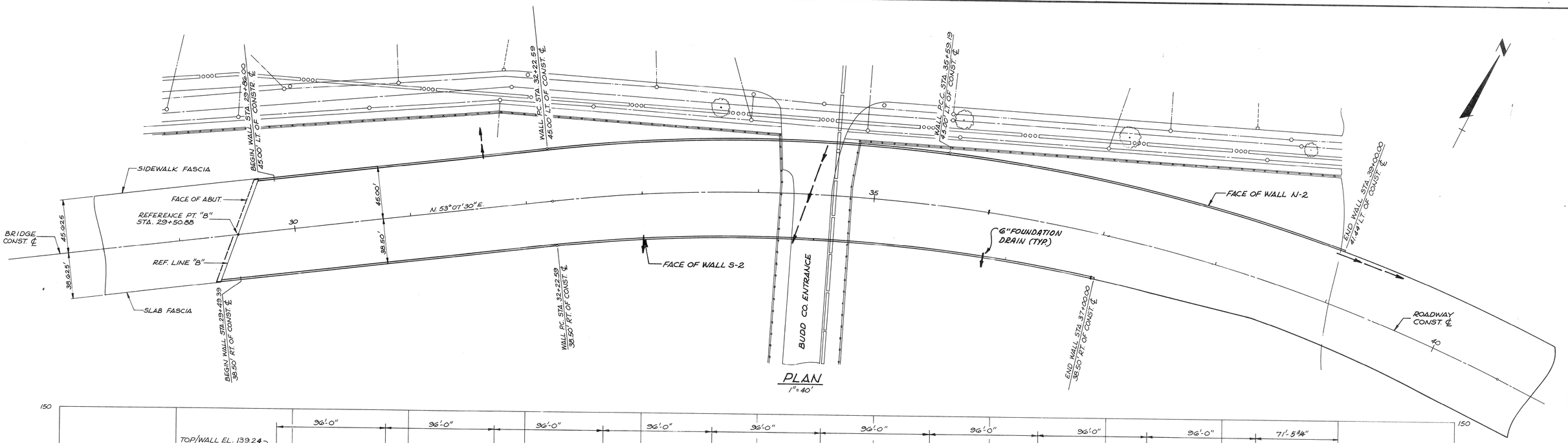

PLAN
1"=40'

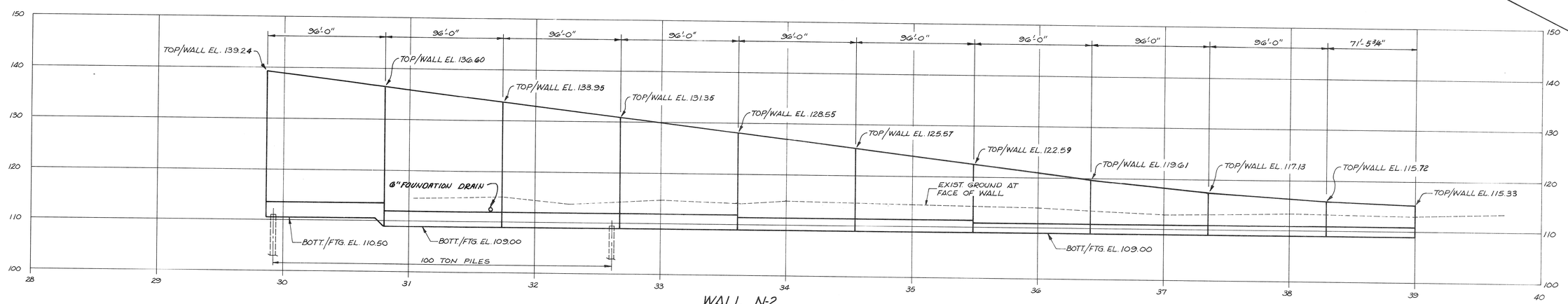

WALL N-2
HOR. ~ 1"=40'
VERT.~ 1"=10'

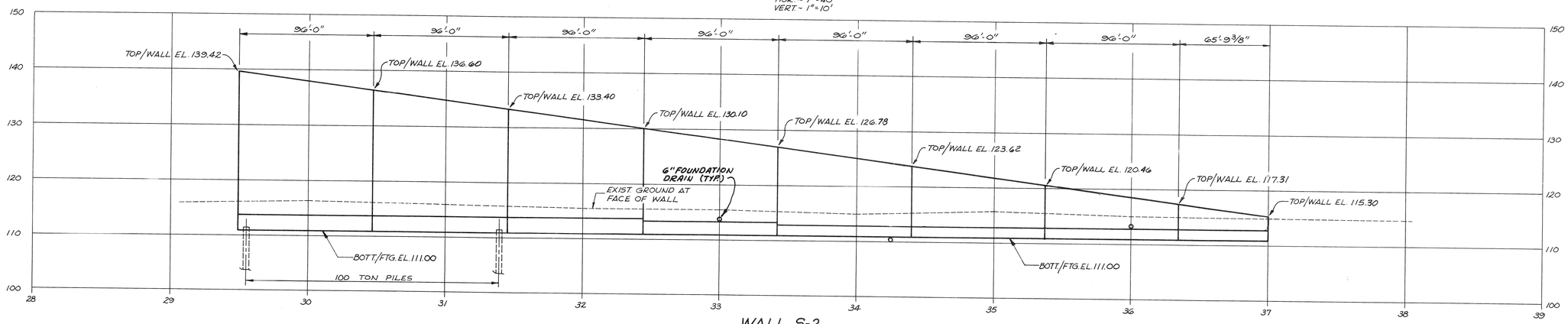

WALL S-2
HOR. ~ 1"=40'
VERT.~ 1"=10'

CURVE DATA (Face/Wall)

CURVE N-2A		CURVE N-2B	
R.	= 1,477.50'	R.	= 1,565.04'
D.	= 03°52'40"	D.	= 03°39'40"
Δ	= 13°27'47"	Δ	= 12°38'55"
L.	= 347.18'	L.	= 343.22'
T.	= 174.39'	T.	= 172.30'
Chd.	= 346.38'	Chd.	= 342.53'
M.	= 10.19'	M.	= 9.40'
E.	= 10.26'	E.	= 9.46'
P.C.	= STA. 32+22.59	P.C.	= STA. 35+59.13
P.I.	= STA. 33+91.62	P.I.	= STA. 37+30.27
P.T.	= STA. 35+59.19	P.T.	= STA. 39+00.00

CURVE S-2A	
R.	= 1,394.00'
D.	= 04°06'37"
Δ	= 19°05'42"
L.	= 464.58'
T.	= 234.46'
Chd.	= 462.43'
M.	= 19.31'
E.	= 19.58'
P.C.	= STA. 32+22.59
P.I.	= STA. 34+63.66
P.T.	= STA. 37+00.00

NO.	COOR'D	DESCRIPTION	DR'N	CK'D	AP'VD	DATE
REVISIONS LOCATED BY COORDINATES ON SHEET						

REFERENCE DRAWINGS

DESIGNED BY	R.J.C./K.C.H.
DRAWN BY	K.C.H./L.S.
TRACED BY	
CHECKED BY	B.P.

CITY OF DETROIT
JEFFERSON/CONNER INDUSTRIAL REVITALIZATION PROJECT
— MACK AVENUE IMPROVEMENTS —

STATE OF MICHIGAN — JULIAN C. MADISON — ENGINEER — No. 14065 — REGISTERED PROFESSIONAL ENGINEER

MADISON MADISON INTERNATIONAL OF MICHIGAN
in association with
HNTB HOWARD NEEDLES TAMMEN & BERGENDOFF

RETAINING WALLS
GENERAL PLAN OF STRUCTURE

SHEET S10A OF 117 SHEETS
JOB NO. 8627
SCALE: AS NOTED
DATE SEPT. 3, 1987

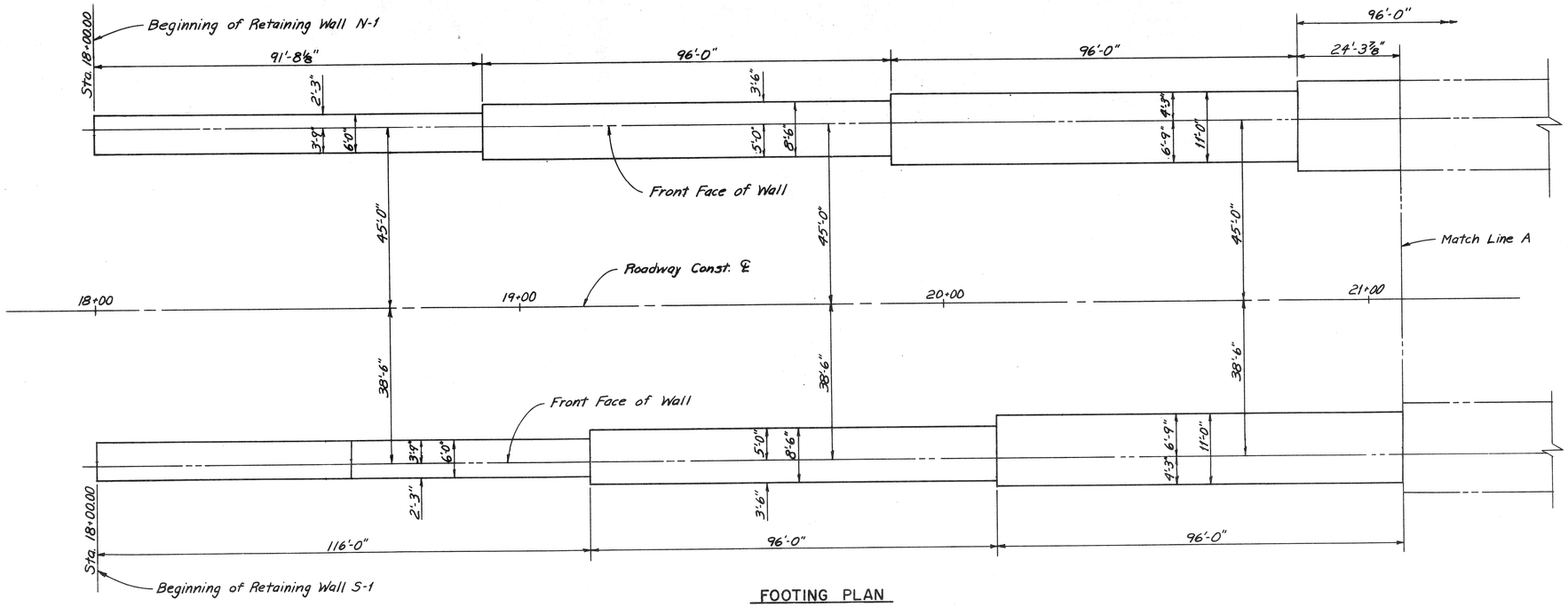

FOOTING PLAN
No Scale

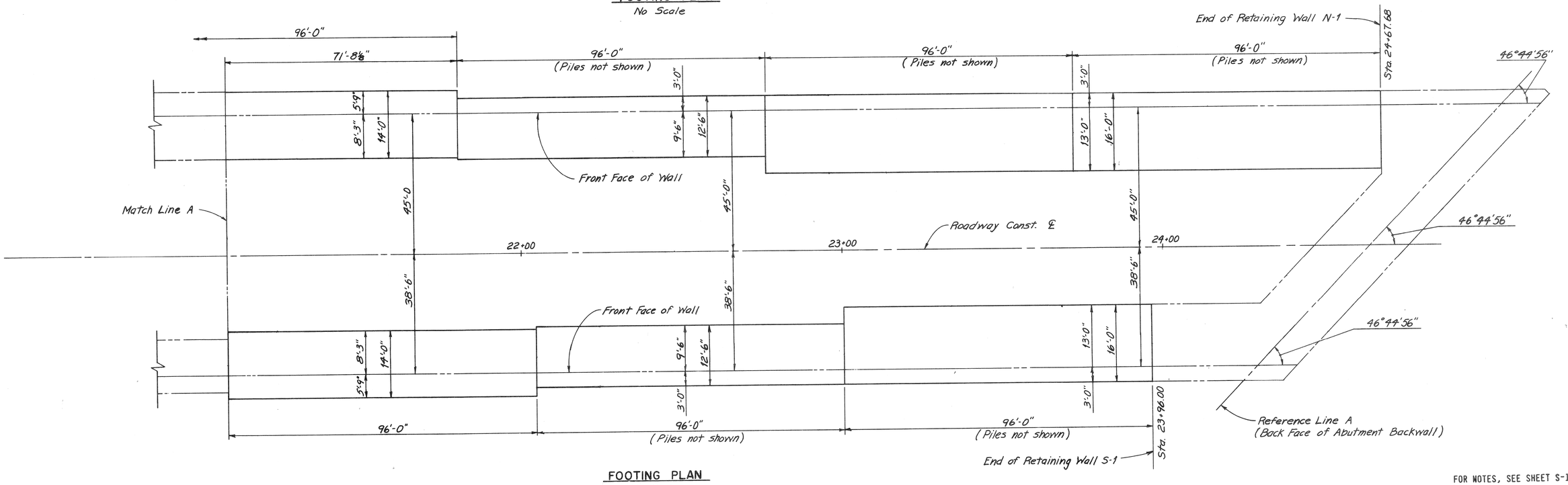

FOOTING PLAN
No Scale

FOR NOTES, SEE SHEET S-12.

COOR'D	DESCRIPTION	DR'N	CK'D	AP'VD	DATE

REVISIONS LOCATED BY COORDINATES ON SHEET

REFERENCE DRAWINGS

DESIGNED BY	D. Soh
DRAWN BY	W. Vermes
TRACED BY	W. Vermes
CHECKED BY	W. Becko

CITY OF DETROIT
JEFFERSON/CONNER INDUSTRIAL REVITALIZATION PROJECT
— MACK AVENUE IMPROVEMENTS —

MADISON MADISON INTERNATIONAL OF MICHIGAN
in association with
HNTB HOWARD NEEDLES TAMMEN & BERGENDOFF

MACK AVENUE OVER CONRAIL
FOOTING LAYOUT PLAN

SHEET S-11 OF 117 SHEETS
JOB NO. 8627
SCALE: NO SCALE
SEPTEMBER 3, 1987

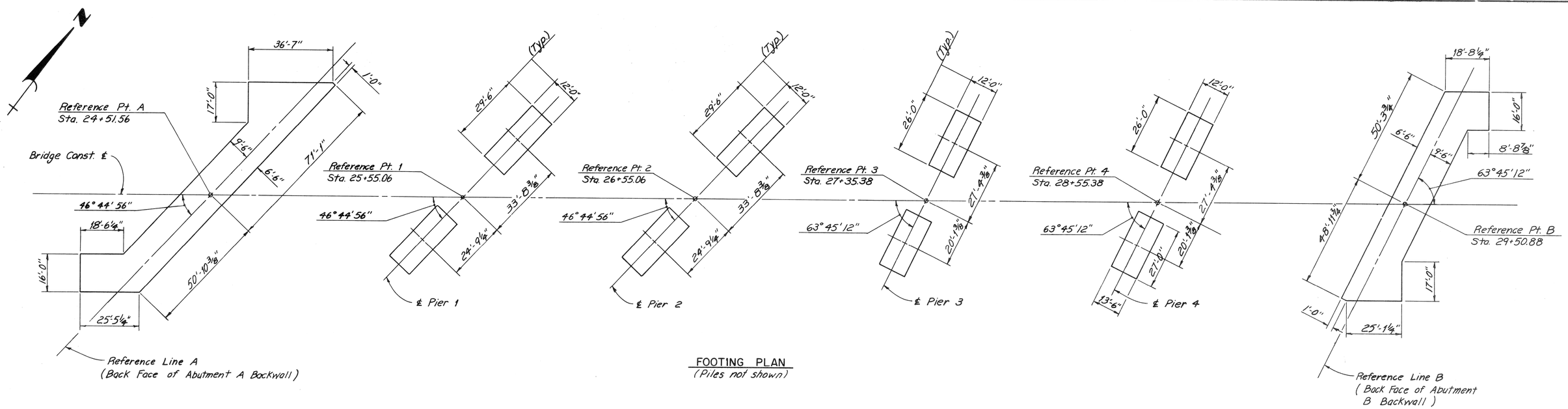

FOOTING PLAN
(Piles not shown)

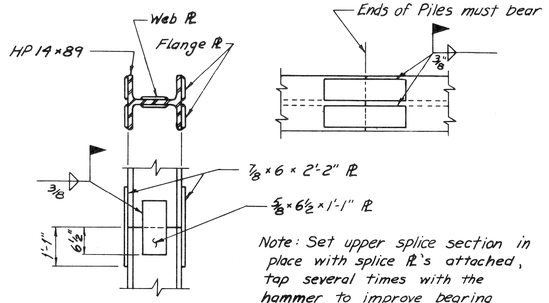

PLATE SPLICE DETAIL

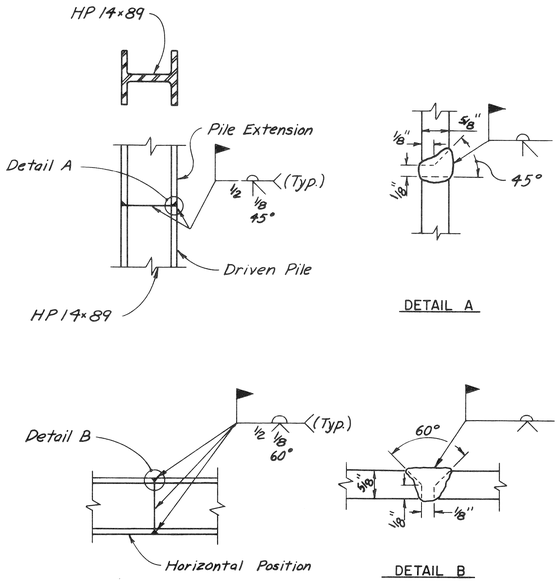

DETAIL A

DETAIL B

BUTT WELD SPLICE DETAIL

H PILE SPLICE DETAILS
No Scale

NOTES FOR PILES

PILING IS NOT SHOWN IN THE FOOTING LAYOUT PLAN. SEE THE DETAILED SUBSTRUCTURE UNIT ON SHEETS S-14 THRU S-32 FOR LOCATING OF PILING.

ALL PILES SHALL BE HP14X89 AND SHALL BE DRIVEN TO A MINIMUM BEARING CAPACITY OF 100 TONS.

PILES SHALL BE DRIVEN TO SUCH ACCURACY THAT THE ENDS OF THE PILES TO BE EMBEDDED IN THE CONCRETE ARE WITHIN 3-IN. OF THE LOCATION SHOWN ON THE PLANS.

THE PILE DRIVING FORMULAS IN THE STANDARD SPECIFICATIONS SHALL NOT BE USED TO DETERMINE BATTERED PILE CAPACITY. BATTERED PILES SHALL BE DRIVEN TO THE ELEVATION ESTABLISHED FOR VERTICAL PILES.

PILES SHALL BE BATTERED 4:12 IN THE DIRECTION OF THE ARROWS.

ALL PILES SHALL BE DRIVEN AS NOTED IN THE FOLLOWING TABLE:

UNIT NO.	LOCATION (STA.)	MINIMUM PILE PENETRATION ELEV.	ESTIMATED PILE TIP ELEV.
WALLS S-1 & N-1	--	+8	+3
ABUT. A	24+51	+6	+1
PIER 1	25+55	+4	-1
PIER 2	26+55	0	-5
PIER 3	27+35	-3	-8
PIER 4	28+55	+3	-2
ABUT. B	29+50	+5	0
WALLS S-2 & N-2	--	+5	0

PILES FOR THE ABUTMENTS AND RETAINING WALLS SHALL BE BITUMINOUS COATED FOR THE ENTIRE PILE LENGTH WITH THE EXCEPTION OF THE UPPER 10-FT (SEE SPECIAL PROVISIONS) AND SHALL BE FITTED WITH A WELDED COLLAR AT THE PILE TIP. THE WELDED COLLAR SHALL BE AT THE CONTRACTOR'S SELECTION AS APPROVED BY THE ENGINEER AND SHALL BE SECURELY ATTACHED AROUND THE ENTIRE PILE PERIMETER AND PROJECT AT LEAST 3/4-IN. FROM THE PILE SURFACES.

ALL PILES INDICATED TO BE PREBORED AT PIER 4 SHALL BE PREBORED TO A DEPTH OF 10-FT BELOW EXISTING GRADE. FOR LOCATION OF PILES, SEE SHEET S-32.

COOR'D	DESCRIPTION	DR'N	CK'D	AP'VD	DATE
REVISIONS LOCATED BY COORDINATES ON SHEET					

REFERENCE DRAWINGS

DESIGNED BY	D. Soh
DRAWN BY	W. Vermes
TRACED BY	W. Vermes
CHECKED BY	W. Becko

CITY OF DETROIT
JEFFERSON/CONNER INDUSTRIAL REVITALIZATION PROJECT
— MACK AVENUE IMPROVEMENTS —

MADISON MADISON INTERNATIONAL OF MICHIGAN
in association with
HNTB HOWARD NEEDLES TAMMEN & BERGENDOFF

MACK AVENUE OVER CONRAIL

FOOTING LAYOUT PLAN

SHEET S-12 OF 117 SHEETS
JOB NO. 8627
SCALE: NO SCALE
DATE SEPTEMBER 3, 1987

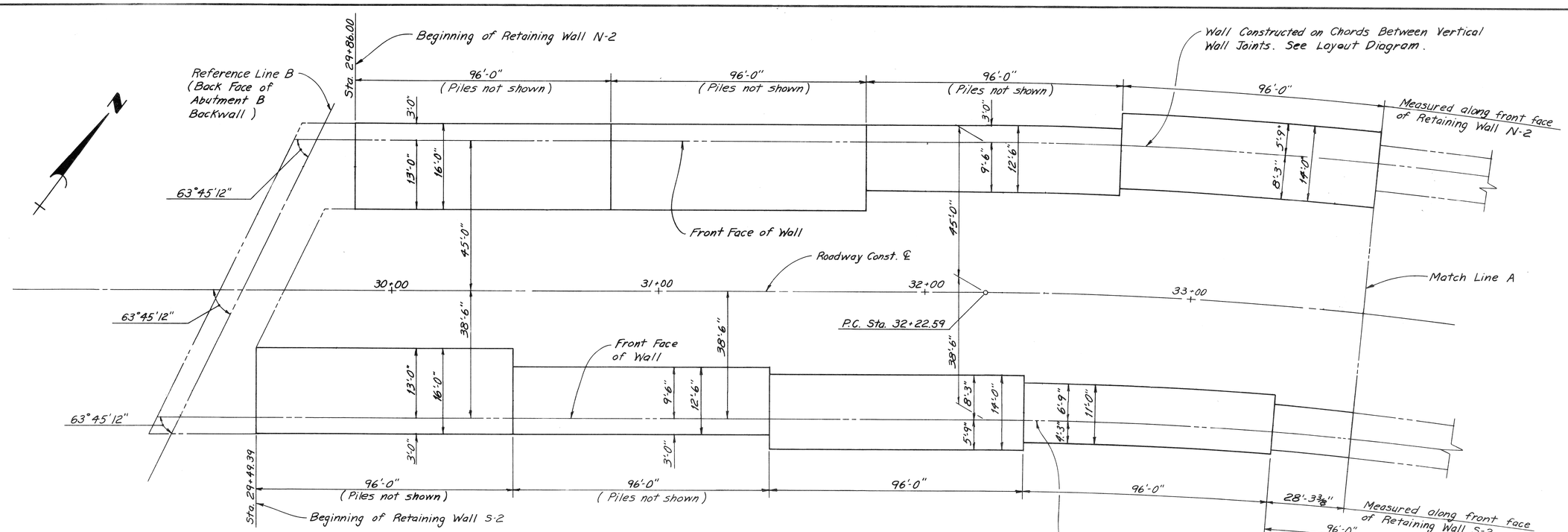

FOOTING PLAN
No Scale

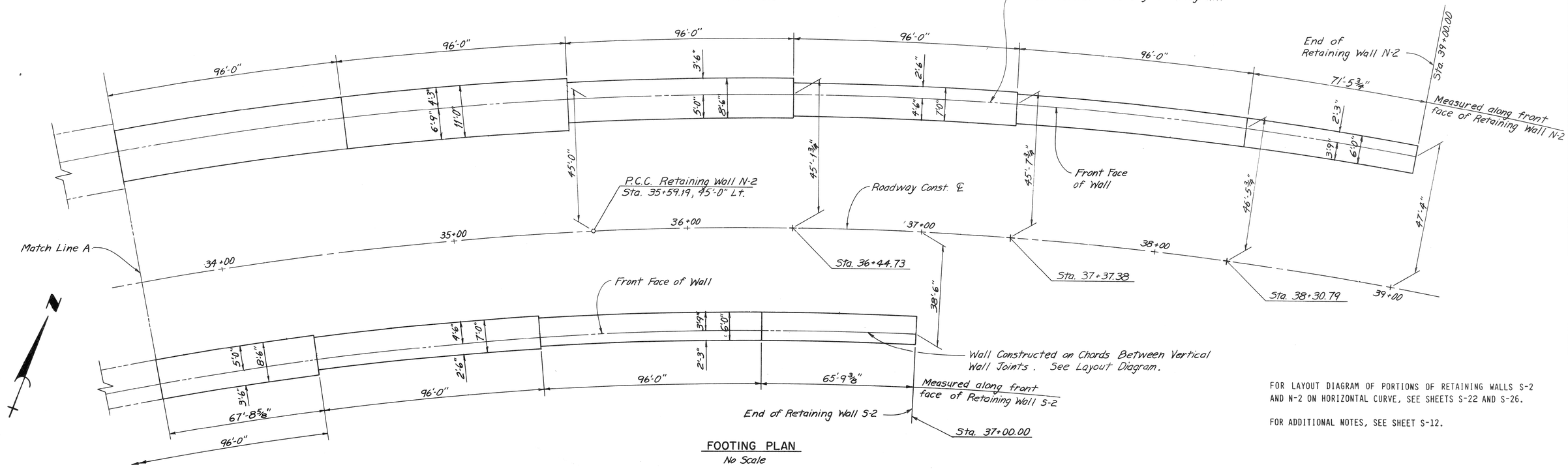

FOOTING PLAN
No Scale

FOR LAYOUT DIAGRAM OF PORTIONS OF RETAINING WALLS S-2 AND N-2 ON HORIZONTAL CURVE, SEE SHEETS S-22 AND S-26.

FOR ADDITIONAL NOTES, SEE SHEET S-12.

COOR'D	DESCRIPTION	DR'N	CK'D	AP'VD	DATE
REVISIONS LOCATED BY COORDINATES ON SHEET					

REFERENCE DRAWINGS

DESIGNED BY	D. Soh
DRAWN BY	B. Vermes
TRACED BY	B. Vermes
CHECKED BY	W. Becka

CITY OF DETROIT
JEFFERSON/CONNER INDUSTRIAL REVITALIZATION PROJECT
— MACK AVENUE IMPROVEMENTS —

MADISON MADISON INTERNATIONAL OF MICHIGAN
in association with
HNTB HOWARD NEEDLES TAMMEN & BERGENDOFF

MACK AVENUE OVER CONRAIL

FOOTING LAYOUT PLAN

SHEET S-13 OF 117 SHEETS
JOB NO. 8627
SCALE: NO SCALE
DATE SEPTEMBER 3, 1987

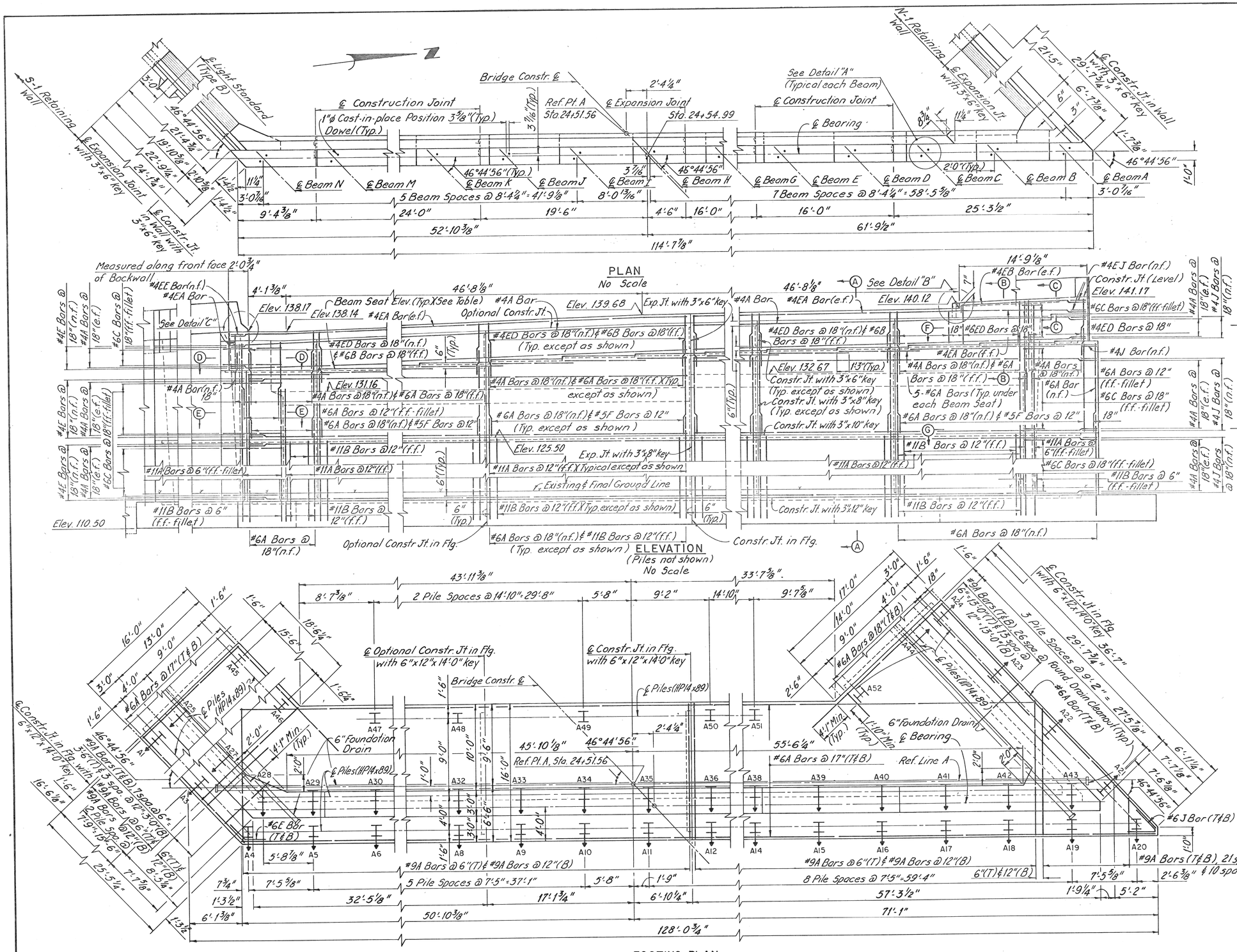
PLAN
No Scale
ELEVATION
(Piles not shown)
No Scale
FOOTING PLAN
No Scale
5:1 Retaining Wall
N:1 Retaining Wall
℄ Light Standard (Type B)
℄ Construction Joint
(1"ϕ Cast-in-place Position 3⅝"(Typ.) Dowel(Typ.)
Bridge Constr. ℄
Ref. Pt. A Sta. 24+51.56
℄ Expansion Joint
Sta. 24+54.99
See Detail "A" (Typical each Beam)
℄ Bearing
℄ Expansion Jt. with 3"x6" Key
℄ Constr. Jt. in Wall with 3"x6" Key
℄ Constr. Jt. in Wall with 3"x12"x140 Key
℄ Beam N
℄ Beam M
℄ Beam K
℄ Beam J
℄ Beam I
℄ Beam H
℄ Beam G
℄ Beam E
℄ Beam D
℄ Beam C
℄ Beam B
℄ Beam A
5 Beam Spaces @ 8'-4¼" = 41'-9⅛"
7 Beam Spaces @ 8'-4¼" = 58'-5⅜"
114'-7⅞"
52'-10⅜"
61'-9½"
Measured along front face 2'-0¾" of Backwall
Beam Seat Elev.(Typ.)(See Table)
Elev. 138.17
Elev. 138.14
Elev. 139.68
Elev. 140.12
Elev. 141.17
Elev. 131.16
Elev. 125.50
Elev. 110.50
Exp. Jt. with 3"x6" key
Exp. Jt. with 3"x8" key
Exp. Jt. with 3"x10" key
Exp. Jt. with 3"x12" key
Constr. Jt. with 3"x6" Key (Typ. except as shown)
Constr. Jt. with 3"x8" Key (Typ. except as shown)
Constr. Jt. with 3"x10" key
Constr. Jt. with 3"x12" key
Constr. Jt. in Flg.
Optional Constr. Jt. in Flg.
Existing & Final Ground Line
See Detail "B"
See Detail "C"
#4A Bar
#4AA Bars @ 18"(n.f.)
#4AEA Bar(e.f.)
#4AEB Bar(e.f.)
#4AEC Bars @ 18"(n.f.)
#4AEC Bar(n.f.)
#4AEA Bar
#4AEB Bar(n.f.)
#4AED Bars @ 18"(n.f.) & #6B Bars @ 18"(f.f.) (Typ. except as shown)
#4AED Bars @ 18"(n.f.) & #6B Bars @ 18"(f.f.)
#4AED Bars @ 18"
#4AEJ Bar(n.f.) Constr. Jt. (Level)
#4AJ Bars @ 18"(e.f.) & 18"(n.f.)
#4AJ Bar(n.f.)
#4A Bars @ 18"(n.f.) & #6A Bars @ 18"(f.f.) X Typ. except as shown
#4A Bars @ 18"(n.f.) & #6A Bars @ 18"(f.f.)
#6A Bars @ 12"(f.f.-fillet)
#6A Bars @ 18"(n.f.) & #5F Bars @ 12"
#6A Bars @ 18"(n.f.) & #5F Bars @ 12" (Typ. except as shown)
#6A Bar (n.f.)
#6A Bars @ 12" (f.f.-fillet)
#6C Bars @ 18" (f.f.-fillet)
#6A Bars @ 18"(n.f.)
#6A Bars @ 18"(n.f.) & #11B Bars @ 12"(f.f.) (Typ. except as shown)
#11A Bars @ 6"(f.f.-fillet)
#11A Bars @ 12"(f.f.)
#11A Bars @ 12"(f.f.) X Typical except as shown
#11B Bars @ 12"(f.f.)
#11B Bars @ 12"(f.f.) X Typ. except as shown)
#11B Bars @ 6" (f.f.-fillet)
#11B Bars @ 6" (f.f.-fillet)
5-#6A Bars (Typ. under each Beam Seat)
#4E Bars @ 18"(n.f.)
#4EC Bars @ 18"(f.f.-fillet)
#6C Bars @ 18"(f.f.-fillet)
#4J Bars @ 18"(n.f.)
#4J Bars @ 18"(e.f.)
#4J Bar(n.f.)
#6J Bar(T&B)
#6E Bar (T&B)
#6E Bars @ 18"(n.f.)
#6EC Bars @ 18"(f.f.-fillet)
#6EA Bar(e.f.)
#6EA Bar(f.f.)
#6EA Bar
#6EB Bar(e.f.)
#6EB Bars @ 18"
#6EJ Bar(n.f.)
#6EJ Bars @ 18"(n.f.)
#6EJ Bars @ 18"(e.f.)

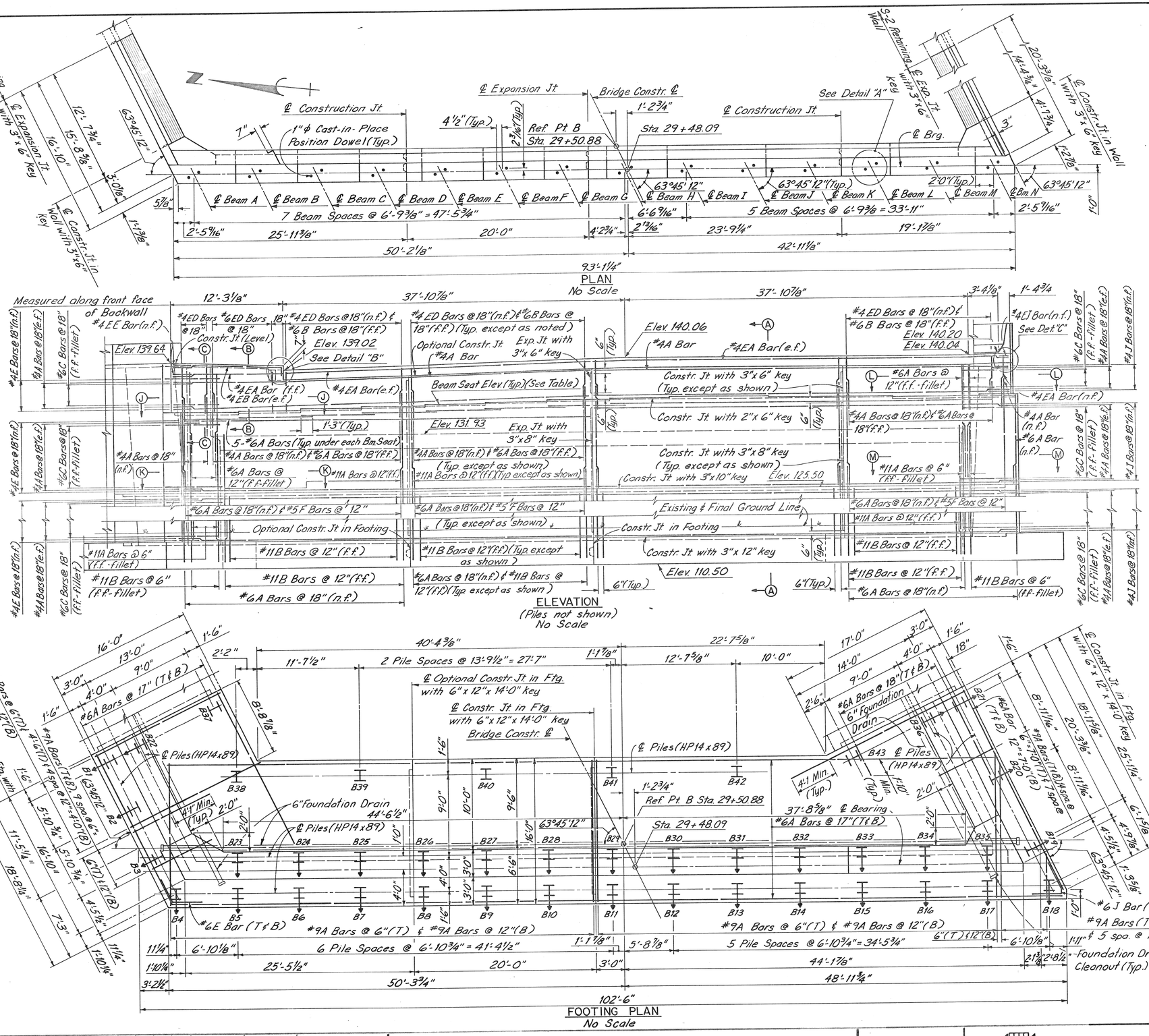

BEAM SEAT ELEVATIONS			
BEAM	ELEV.	BEAM	ELEV.
A	134.43	H	135.59
B	134.52	I	135.60
C	134.67	J	135.60
D	134.86	K	135.59
E	135.04	L	135.59
F	135.23	M	135.58
G	135.41	N	135.70

BAR LAPS	
SIZE	LAP
#4	1'-4"
#5	1'-8"
#6-FOOTING	3'-1"
#6 - ABUTMENT & WINGWALLS	2'-2"
#11	7'-9"

NOTES:

FOR PILING REQUIREMENTS, SEE PROPOSED LAYOUT PLAN, SHEET S-12.

FOR SECTIONS A-A THRU C-C AND J-J THRU M-M AND DETAILS A THRU C SEE ABUTMENT DETAILS, SHEET S-16.

PREFIX "E" FOR BARS DENOTES THAT BAR SHALL BE EPOXY COATED.

THE BEAM SEAT AND FRONT FACE OF BACKWALL SHALL BE GIVEN AN APPLICATION OF PROTECTIVE SEALANT COATING FOR CONCRETE PRIOR TO PLACING OF LAMINATED ELASTOMERIC EXPANSION BEARINGS.

THE EXPOSED FACES OF THE ABUTMENT SHALL HAVE SPECIAL ARCHITECTURAL TREATMENT IN ACCORDANCE WITH SECTION 5.03.06(C) OF THE STANDARD SPECIFICATIONS.

A PREFABRICATED DRAINAGE SYSTEM SHALL BE INSTALLED ON THE BACKFILL SURFACES OF THE ABUTMENTS AND PILE-SUPPORTED RETAINING WALLS. THE PREFABRICATED DRAINAGE SYSTEM SHALL BE IN ACCORDANCE WITH THE SPECIAL PROVISION FOR PREFABRICATED DRAINAGE SYSTEM.

CAST IRON PIPES AND FITTINGS SHALL BE USED FOR FOUNDATION DRAIN CLEANOUTS AND PASSAGE THROUGH WALLS. ENDS OF CLEANOUTS SHALL HAVE A THREADED BRASS PLUG. ADJUST REINFORCING STEEL AS NECESSARY.

THE FOLLOWING ABBREVIATIONS ARE USED:

T	DENOTES TOP	N.F.	DENOTES NEAR FACE
B	DENOTES BOTTOM	F.F.	DENOTES FAR FACE
TYP.	DENOTES TYPICAL	E.F.	DENOTES EACH FACE

FOR DETAILS AT EXPANSION JOINT IN ABUTMENT STEM, BACKWALL AND WINGWALL, SEE RETAINING WALL DETAILS, SHEET S-28.

COOR'D	DESCRIPTION	DR'N	CK'D	AP'VD	DATE

REVISIONS LOCATED BY COORDINATES ON SHEET

REFERENCE DRAWINGS

DESIGNED BY	D. Sah
DRAWN BY	J. Vargo
TRACED BY	P. Koszkalda
CHECKED BY	C. Cvitkovich

CITY OF DETROIT
JEFFERSON/CONNER INDUSTRIAL REVITALIZATION PROJECT
— MACK AVENUE IMPROVEMENTS —

MADISON MADISON INTERNATIONAL OF MICHIGAN
in association with
HNTB HOWARD NEEDLES TAMMEN & BERGENDOFF

MACK AVENUE OVER CONRAIL
ABUTMENT "B"

SHEET S-15 OF 117 SHEETS
JOB NO. 8627
SCALE NO SCALE
DATE SEPTEMBER 3, 1987

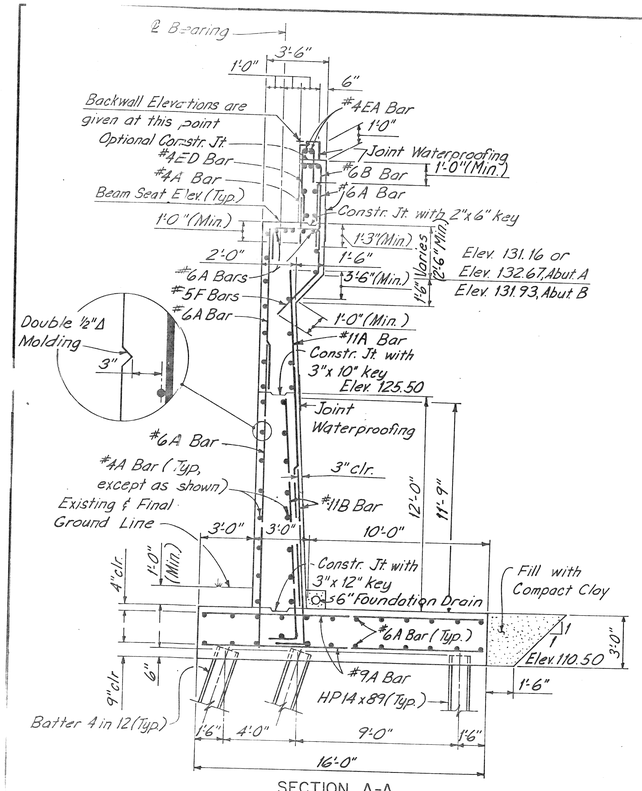

SECTION A-A
Scale: 1/4"=1'-0"

SECTION B-B
(Exp. Jt. Device not shown)
Scale: 3/8"=1'-0"

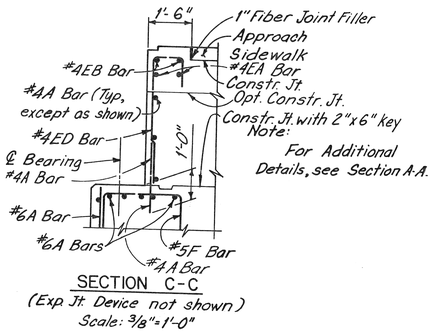

SECTION C-C
(Exp. Jt. Device not shown)
Scale: 3/8"=1'-0"

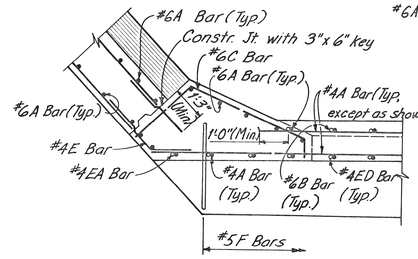

SECTION D-D
Scale: 3/8"=1'-0"

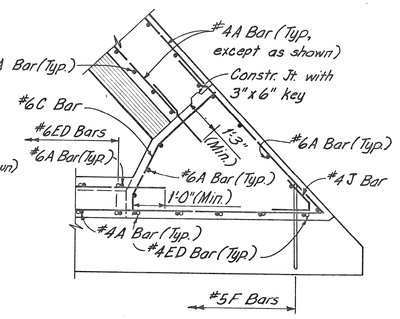

SECTION F-F
Scale: 3/8"=1'-0"

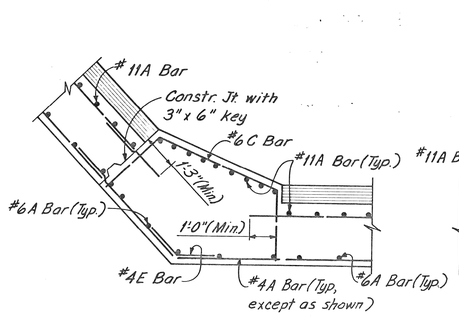

SECTION E-E
Scale: 3/8"=1'-0"

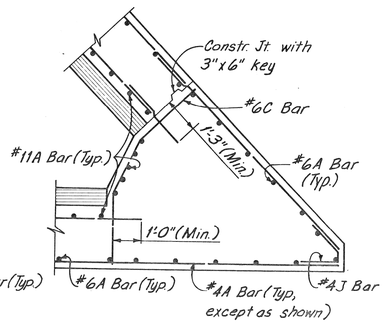

SECTION G-G
Scale: 3/8"=1'-0"

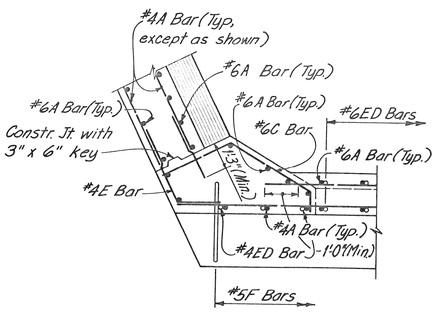

SECTION J-J
Scale: 3/8"=1'-0"

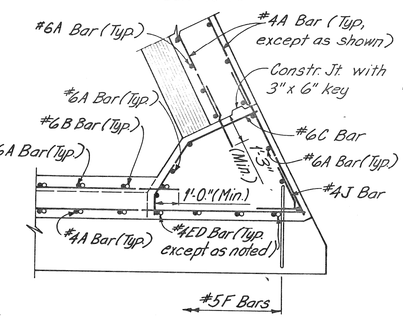

SECTION L-L
Scale: 3/8"=1'-0"

SECTION K-K
Scale: 3/8"=1'-0"

SECTION M-M
Scale: 3/8"=1'-0"

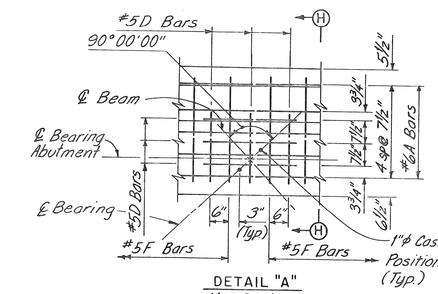

DETAIL "A"
No Scale
(Typical at all Beams)

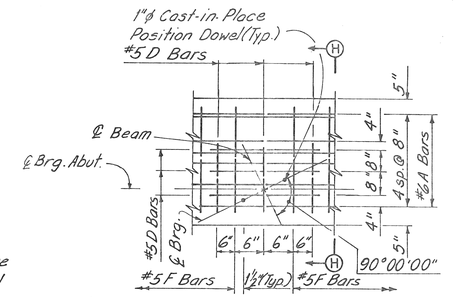

DETAIL "A"
No Scale
(Typical at all Beams)

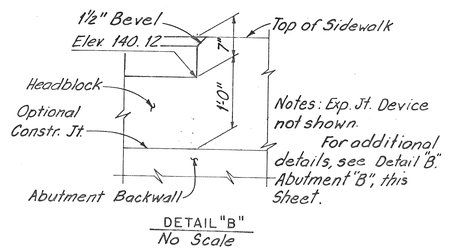

DETAIL "B"
No Scale

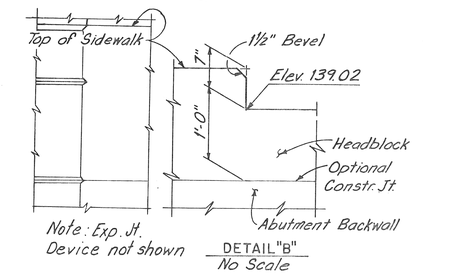

DETAIL "B"
No Scale

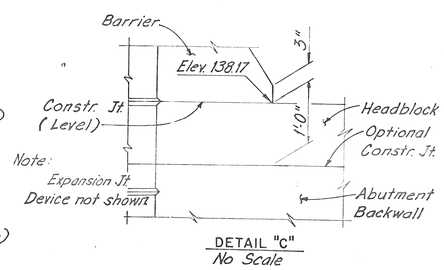

DETAIL "C"
No Scale

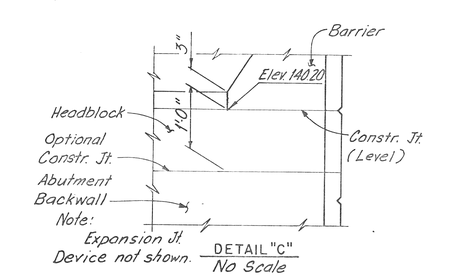

DETAIL "C"
No Scale

ABUTMENT "A"

ABUTMENT "B"

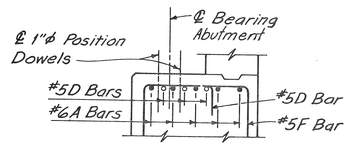

SECTION H-H
No Scale

BAR LAPS	
SIZE	LAP
#4	1'-4"
#5	1'-8"
#6-FOOTING	3'-1"
#6 - ABUTMENT & WINGWALLS	2'-2"
#11	7'-9"

NOTES:
FOR LOCATION OF SECTIONS A-A THRU C-C AND DETAILS A THRU C SEE ABUTMENT "A", SHEET S-14 AND ABUTMENT "B", SHEET S-15

FOR LOCATION OF SECTIONS D-D THRU G-G SEE ABUTMENT "A" SHEET S-14

FOR LOCATION OF SECTIONS J-J THRU M-M SEE ABUTMENT "B" SHEET S-15

FOR ADDITIONAL NOTES SEE ABUTMENT "A", SHEET S-14

COORD	DESCRIPTION	DR'N	CK'D	AP'VD	DATE
REVISIONS LOCATED BY COORDINATES ON SHEET					

REFERENCE DRAWINGS

DESIGNED BY	D.Soh
DRAWN BY	J.Vargo
TRACED BY	P.koszkolda
CHECKED BY	C.Cvitkovich

CITY OF DETROIT
JEFFERSON/CONNER INDUSTRIAL REVITALIZATION PROJECT
— MACK AVENUE IMPROVEMENTS —

MADISON MADISON INTERNATIONAL OF MICHIGAN
in association with
HNTB HOWARD NEEDLES TAMMEN & BERGENDOFF

ABUTMENT DETAILS

SHEET S-16 OF 117 SHEETS
JOB NO. 8627
SCALE: AS SHOWN
DATE SEPTEMBER 3, 1987

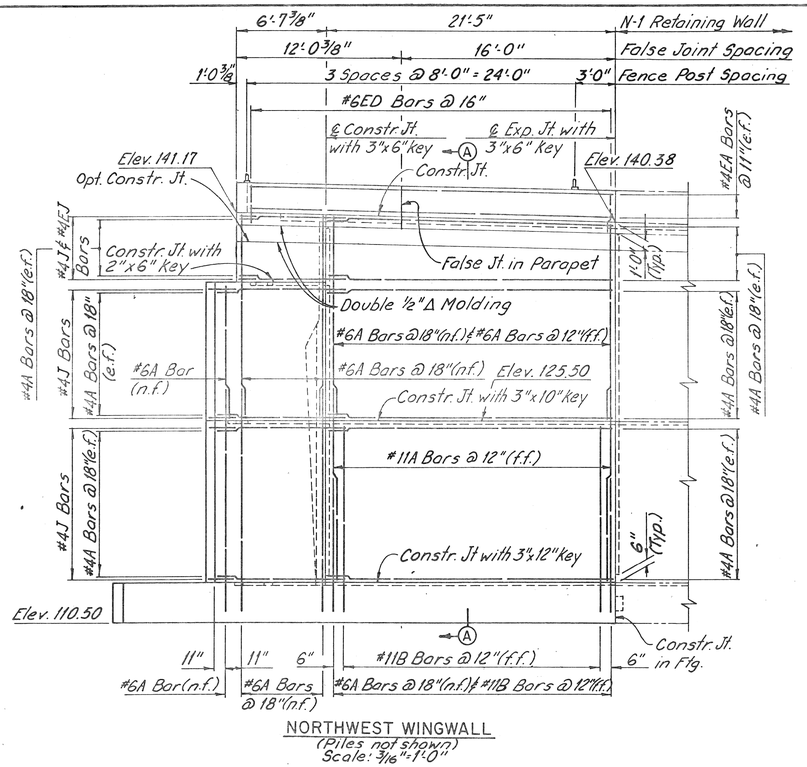

NORTHWEST WINGWALL
(Piles not shown)
Scale: 3/16"=1'-0"

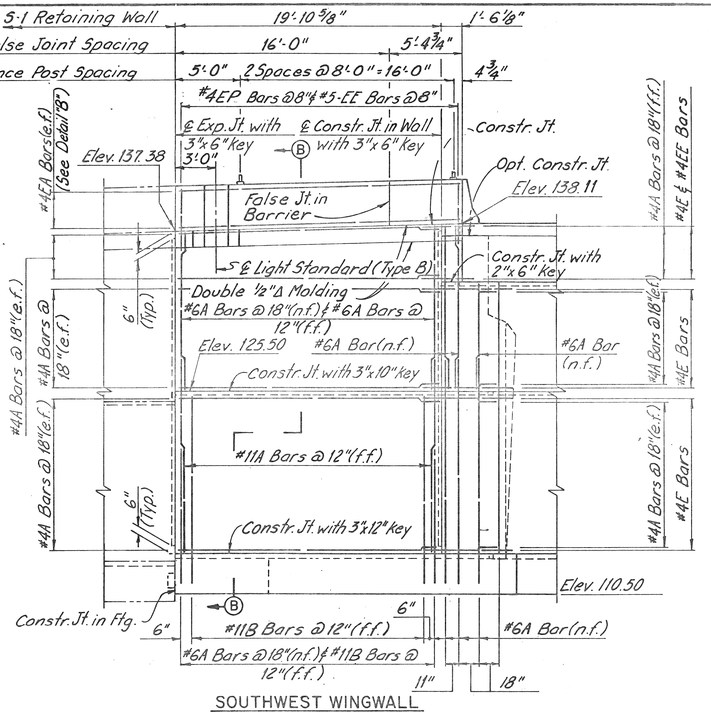

SOUTHWEST WINGWALL
(Piles not shown)
Scale: 3/16"=1'-0"

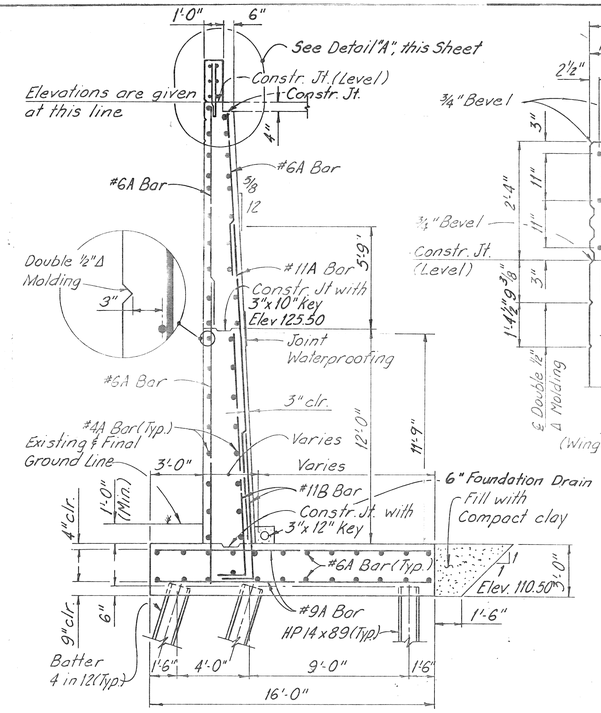

SECTION A-A
Northeast Wingwall shown, Northwest Wingwall similar
Scale: ¼"=1'-0"

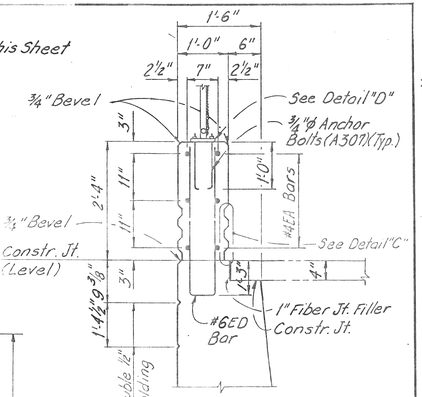

DETAIL "A"
(Wingwall reinf. not shown)
No Scale

BAR LAPS	
SIZE	LAP
#4	1'-4"
#5	1'-8"
#6-FOOTING	3'-1"
#6 - ABUTMENT & WINGWALLS	2'-2"
#11	7'-9"

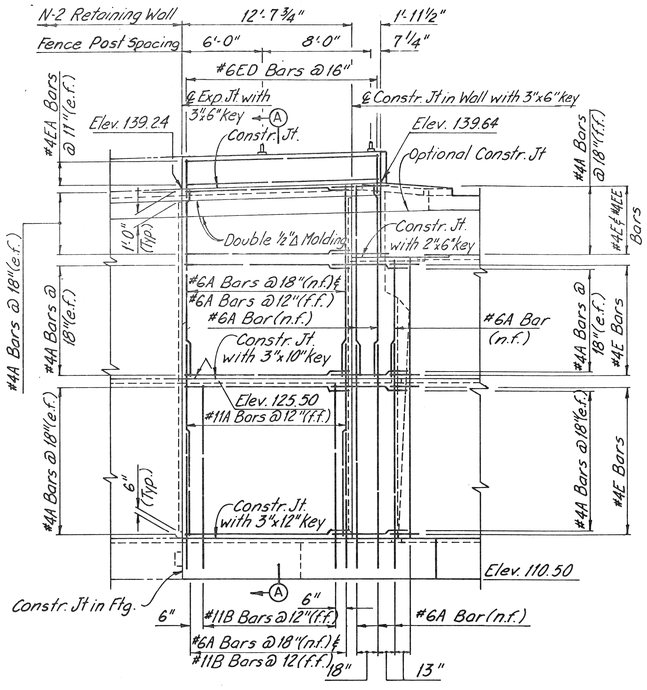

NORTHEAST WINGWALL
(Piles not shown)
Scale: 3/16"=1'-0"

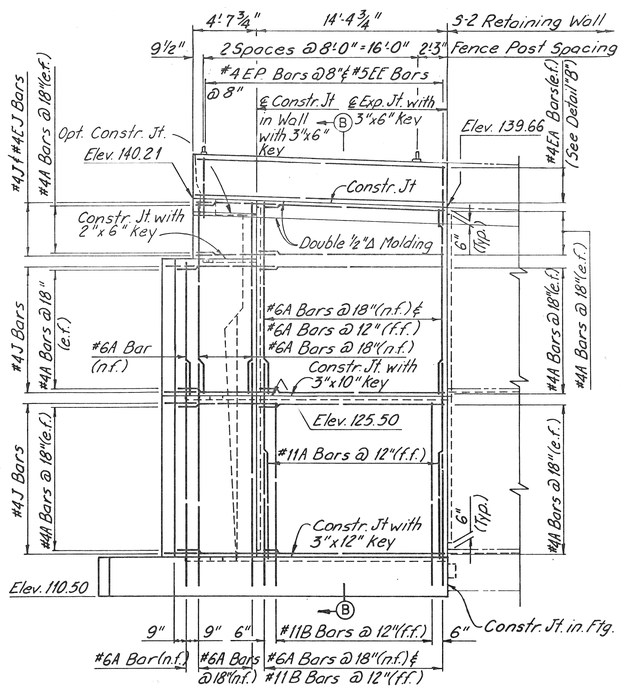

SOUTHEAST WINGWALL
(Piles not shown)
Scale: 3/16"=1'-0"

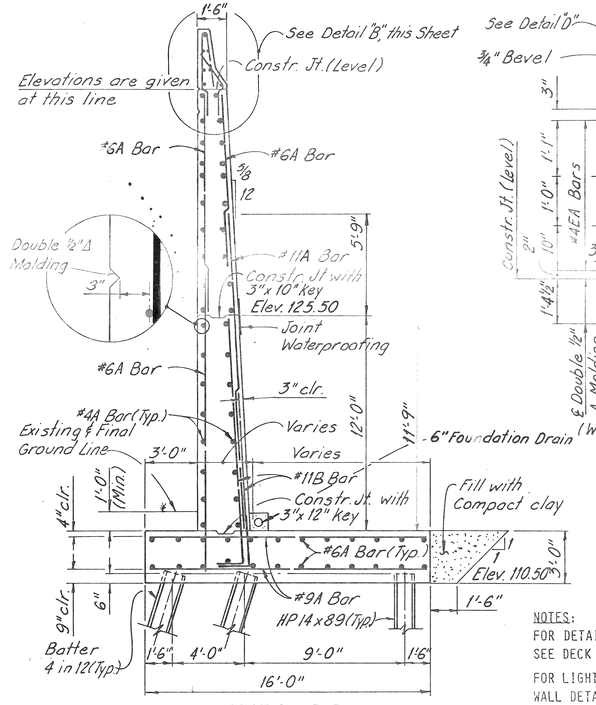

SECTION B-B
Southwest Wingwall shown, Southeast Wingwall similar
Scale: ¼"=1'-0"

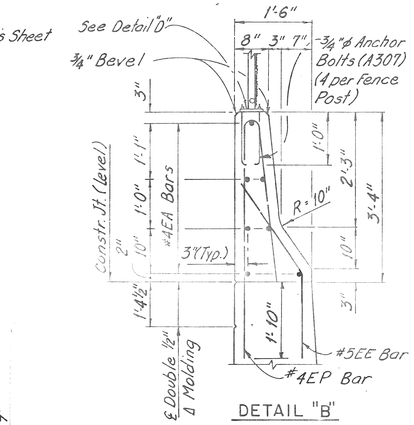

DETAIL "B"
(Wingwall reinf. not shown)
No Scale

NOTES:
FOR DETAILS C AND D AND FENCING DETAILS SEE DECK DETAILS SHEET S-45.
FOR LIGHT STANDARD DETAILS SEE RETAINING WALL DETAILS SHEET S-28.
FOR ADDITIONAL NOTES SEE ABUTMENT "A", SHEET S-14.

COOR'D	DESCRIPTION	DR'N	CK'D	AP'VD	DATE
REVISIONS LOCATED BY COORDINATES ON SHEET					

REFERENCE DRAWINGS

DESIGNED BY	D. Sah
DRAWN BY	J. Vargo
TRACED BY	J. Vargo
CHECKED BY	C. Cvitkovich

CITY OF DETROIT
JEFFERSON/CONNER INDUSTRIAL REVITALIZATION PROJECT
— MACK AVENUE IMPROVEMENTS —

MADISON MADISON INTERNATIONAL OF MICHIGAN
in association with
HNTB HOWARD NEEDLES TAMMEN & BERGENDOFF

MACK AVENUE OVER CONRAIL

ABUTMENT WINGWALLS

SHEET 517 OF 117 SHEETS
JOB NO. 8627
SCALE: AS SHOWN
DATE SEPTEMBER 3, 1987

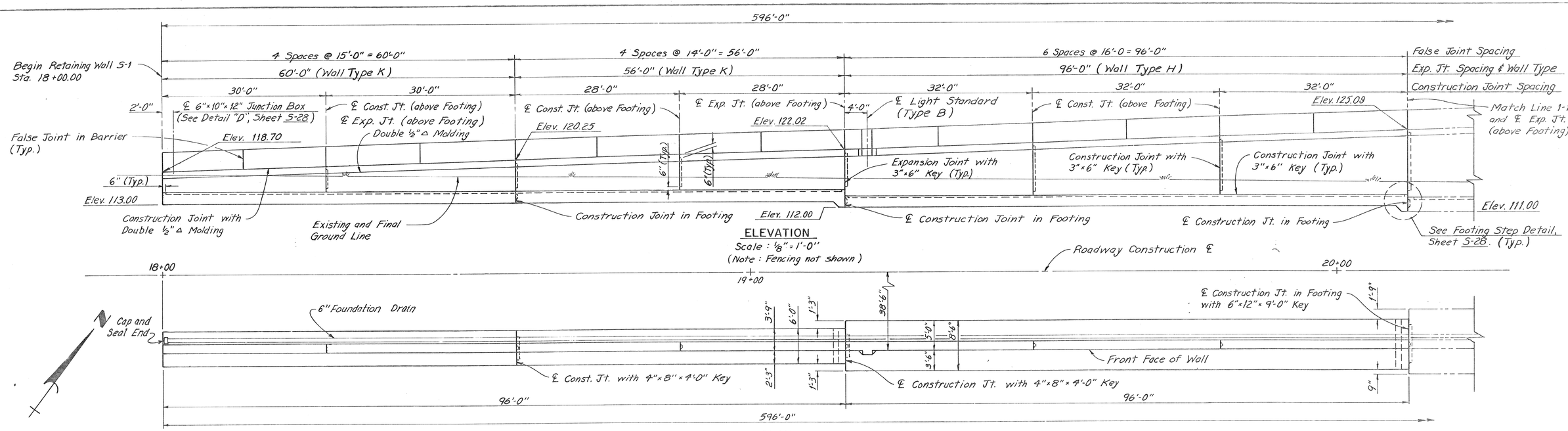

ELEVATION
Scale : ⅛"=1'-0"
(Note : Fencing not shown)

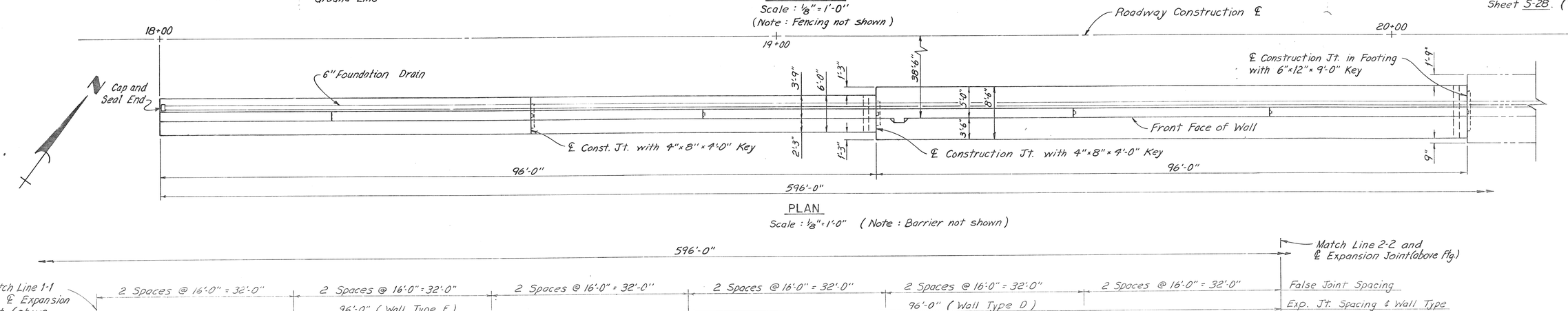

PLAN
Scale : ⅛"=1'-0" (Note : Barrier not shown)

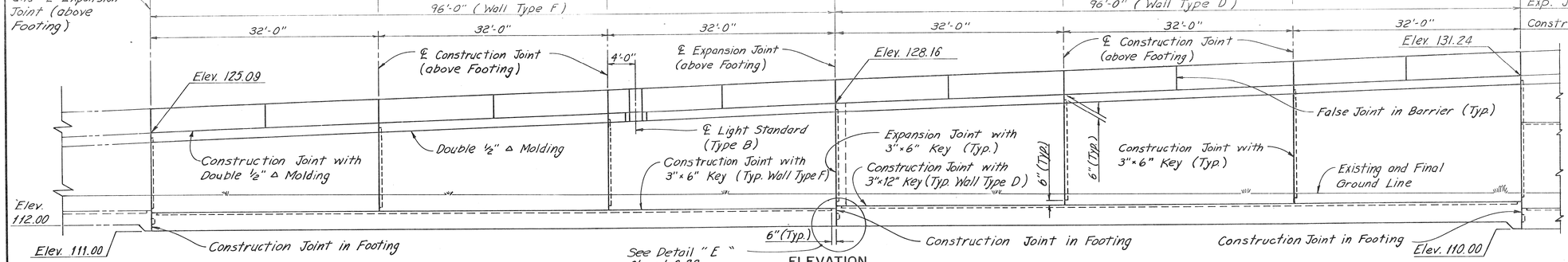

ELEVATION
Scale : ⅛"=1'-0" (Note : Fencing not shown)

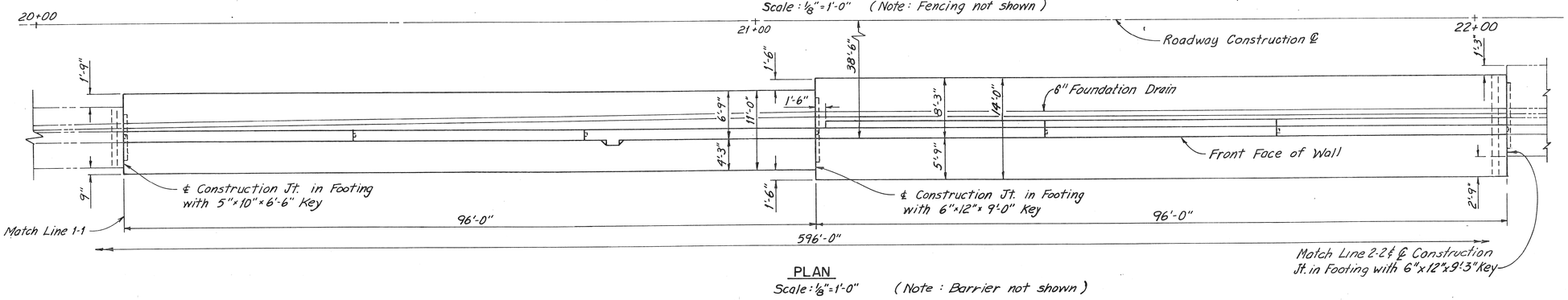

PLAN
Scale : ⅛"=1'-0" (Note : Barrier not shown)

NOTES:

FOR WALL DETAILS, SEE RETAINING WALL DETAILS, SHEET S-27 AND S-28.

FOR DRAINAGE DETAILS, SEE RETAINING WALL DETAILS, SHEET S-28.

FOR LIGHT STANDARD DETAILS, SEE RETAINING WALL DETAILS, SHEET S-28.

FOR FENCING, MOLDING, BEVEL AND FALSE JOINT DETAILS SEE DECK DETAILS, SHEET S-45.

FOR ARCHITECTURAL TREATMENT OF PARAPET, SEE DECK DETAILS, SHEET S-45.

FOR PILING REQUIREMENTS, SEE FOOTING LAYOUT PLAN, SEE SHEET S-12.

THE EXPOSED FACES OF THE RETAINING WALLS SHALL HAVE SPECIAL ARCHITECTURAL TREATMENT IN ACCORDANCE WITH SECTION 5.03.067 (C) OF THE STANDARD SPECIFICATIONS.

PREFIX "E" FOR BARS DENOTES THAT BAR SHALL BE EPOXY COATED.

ADDITIONAL KEYED CONSTRUCTION JOINTS IN FOOTING CAN BE LOCATED AT THE CONTRACTORS SELECTION AS APPROVED BY THE ENGINEER AND SHALL BE AT LEAST 1'-6" FROM THE CENTERLINE OF PILE.

A PREFABRICATED DRAINAGE SYSTEM SHALL BE INSTALLED ON THE BACKFILL SURFACES OF THE ABUTMENTS AND PILE-SUPPORTED RETAINING WALLS. THE PREFABRICATED DRAINAGE SYSTEM SHALL BE IN ACCORDANCE WITH THE SPECIAL PROVISION FOR PREFABRICATED DRAINAGE SYSTEM.

COOR'D	DESCRIPTION	DR'N	CK'D	AP'VD	DATE
REVISIONS LOCATED BY COORDINATES ON SHEET					

REFERENCE DRAWINGS

DESIGNED BY	D. Sah
DRAWN BY	W. Vermes
TRACED BY	W. Vermes
CHECKED BY	J. Vargo

CITY OF DETROIT
JEFFERSON/CONNER INDUSTRIAL REVITALIZATION PROJECT
— MACK AVENUE IMPROVEMENTS —

MADISON MADISON INTERNATIONAL OF MICHIGAN
in association with
HNTB HOWARD NEEDLES TAMMEN & BERGENDOFF

MACK AVENUE OVER CONRAIL

RETAINING WALL S-1

SHEET S18 OF 117 SHEETS
JOB NO. 8627
SCALE: AS SHOWN
DATE SEPTEMBER 3, 1987

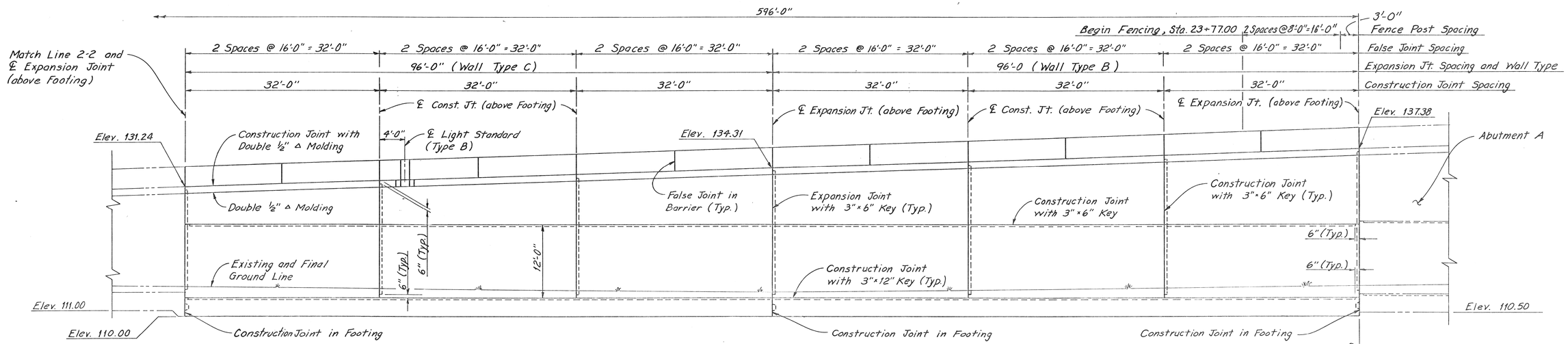

ELEVATION

Scale : ⅛" = 1'-0"

(Note: Piles and Fencing not shown)

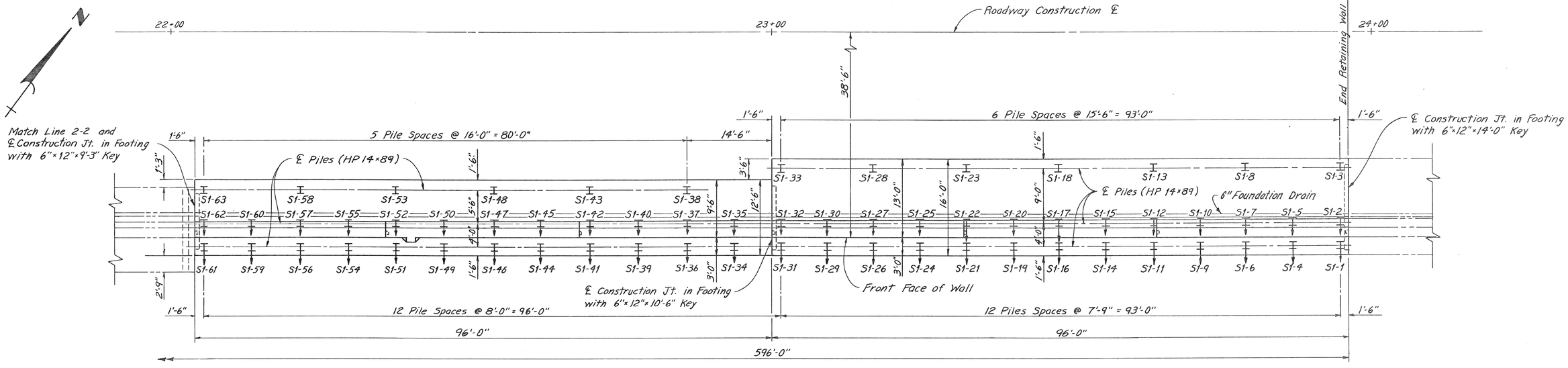

PLAN

Scale : ⅛" = 1'-0"

(Note : Barrier not shown)

NOTE:
FOR RETAINING WALL NOTES SEE RETAINING WALL S-1, SHEET S-18.

COOR'D	DESCRIPTION	DR'N	CK'D	AP'VD	DATE
REVISIONS LOCATED BY COORDINATES ON SHEET					

REFERENCE DRAWINGS

DESIGNED BY	D. Sah
DRAWN BY	W. Vermes
TRACED BY	W. Vermes
CHECKED BY	J. Vargo

CITY OF DETROIT
JEFFERSON/CONNER INDUSTRIAL REVITALIZATION PROJECT
— MACK AVENUE IMPROVEMENTS —

MADISON MADISON INTERNATIONAL OF MICHIGAN
in association with
HNTB HOWARD NEEDLES TAMMEN & BERGENDOFF

MACK AVENUE OVER CONRAIL

RETAINING WALL S-1

SHEET S19 OF 117 SHEETS
JOB NO. 8627
SCALE: AS SHOWN
DATE SEPTEMBER 3, 1987

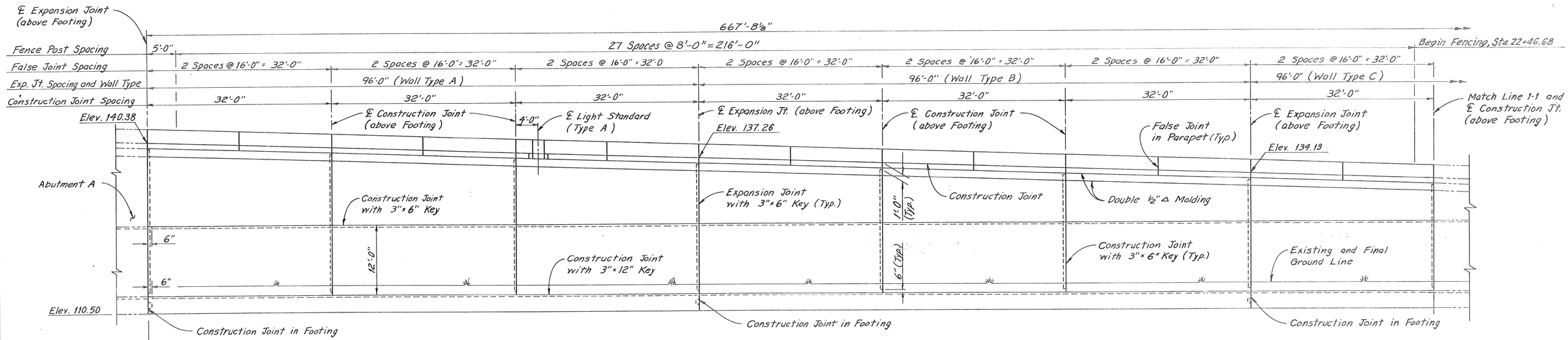

ELEVATION

Scale : ⅛" = 1'-0"

(Note : Piles and Fencing not shown)

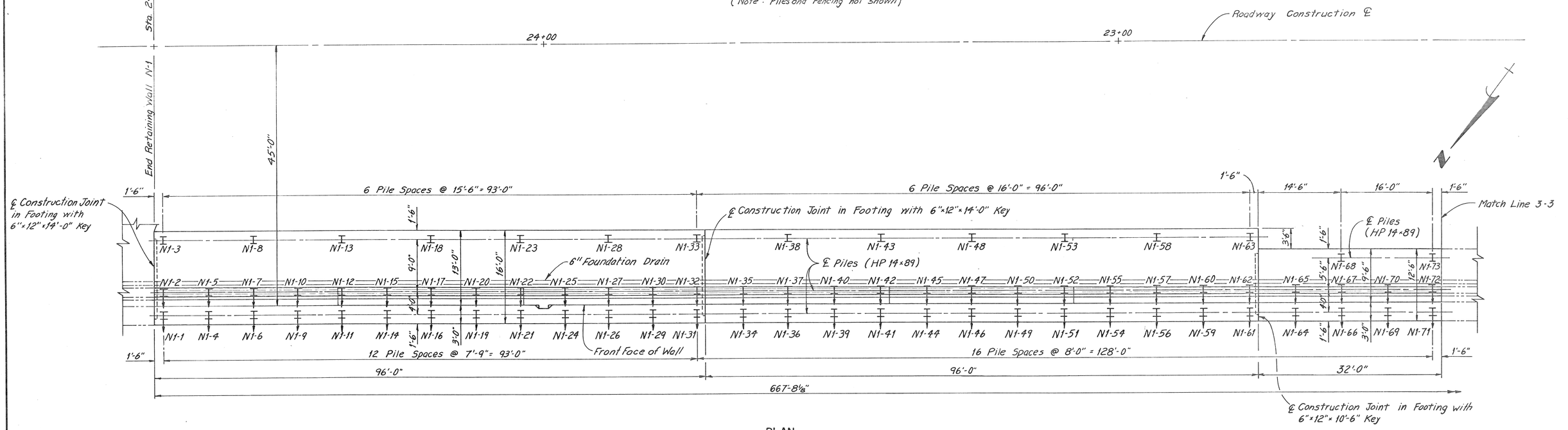

PLAN

Scale : ⅛"-1'-0"

NOTE:
FOR RETAINING WALL NOTES SEE RETAINING WALL S-1, SHEET S-18.

COOR'D	DESCRIPTION	DR'N	CK'D	AP'VD	DATE
REVISIONS LOCATED BY COORDINATES ON SHEET					

REFERENCE DRAWINGS

DESIGNED BY	D. Sah
DRAWN BY	C. Cvitkovich
TRACED BY	W. Vermes
CHECKED BY	J. Vargo

CITY OF DETROIT
JEFFERSON/CONNER INDUSTRIAL REVITALIZATION PROJECT
— MACK AVENUE IMPROVEMENTS —

MADISON MADISON INTERNATIONAL OF MICHIGAN
in association with
HNTB HOWARD NEEDLES TAMMEN & BERGENDOFF

MACK AVENUE OVER CONRAIL

RETAINING WALL N-1

SHEET S20 OF 117 SHEETS
JOB NO. 8627
SCALE: AS SHOWN
DATE SEPTEMBER 3, 1987

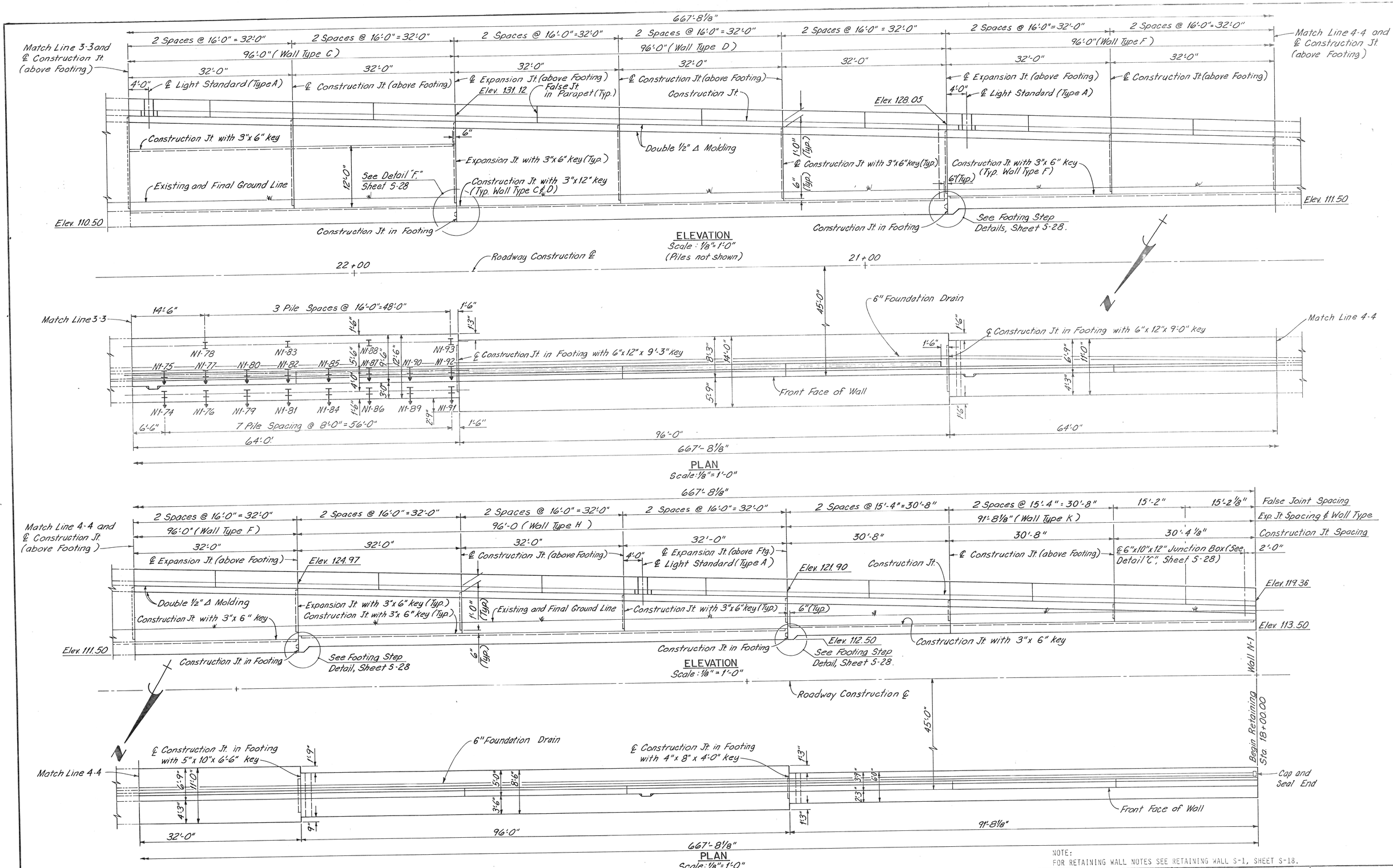

NOTE:
FOR RETAINING WALL NOTES SEE RETAINING WALL S-1, SHEET S-18.

REFERENCE DRAWINGS	DESIGNED BY	D. Soh	CITY OF DETROIT
	DRAWN BY	C. Cvitkovich	JEFFERSON/CONNER INDUSTRIAL REVITALIZATION PROJECT
	TRACED BY	P. Koszkalda	— MACK AVENUE IMPROVEMENTS —
	CHECKED BY	J. Vargo	

COOR'D	DESCRIPTION	DR'N	CK'D	AP'VD	DATE

REVISIONS LOCATED BY COORDINATES ON SHEET

MADISON MADISON INTERNATIONAL OF MICHIGAN
in association with
HNTB HOWARD NEEDLES TAMMEN & BERGENDOFF

MACK AVENUE OVER CONRAIL

RETAINING WALL N-1

SHEET S21 OF 117 SHEETS
JOB NO. 3627
SCALE: AS SHOWN
DATE: SEPTEMBER 3, 1987

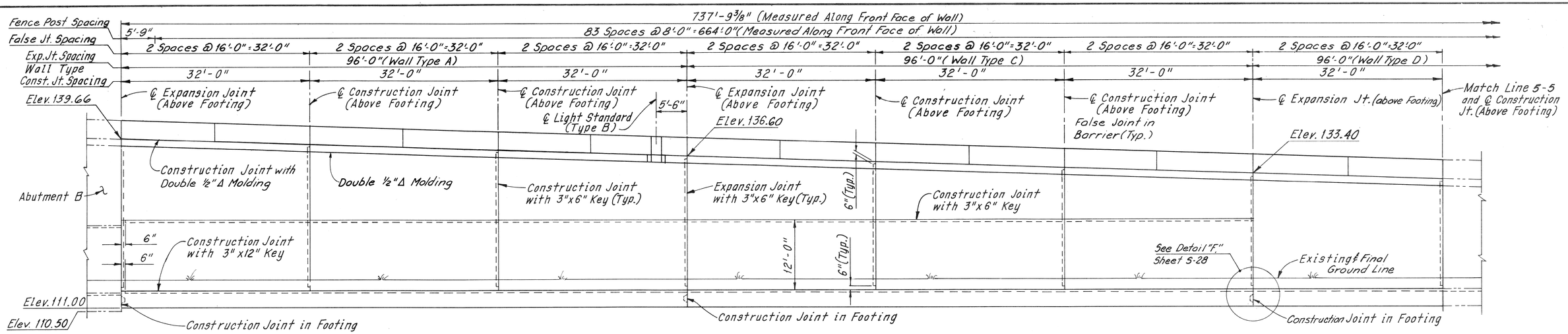

ELEVATION
(Piles and Fencing not shown)
Scale: 1/8" = 1'-0"

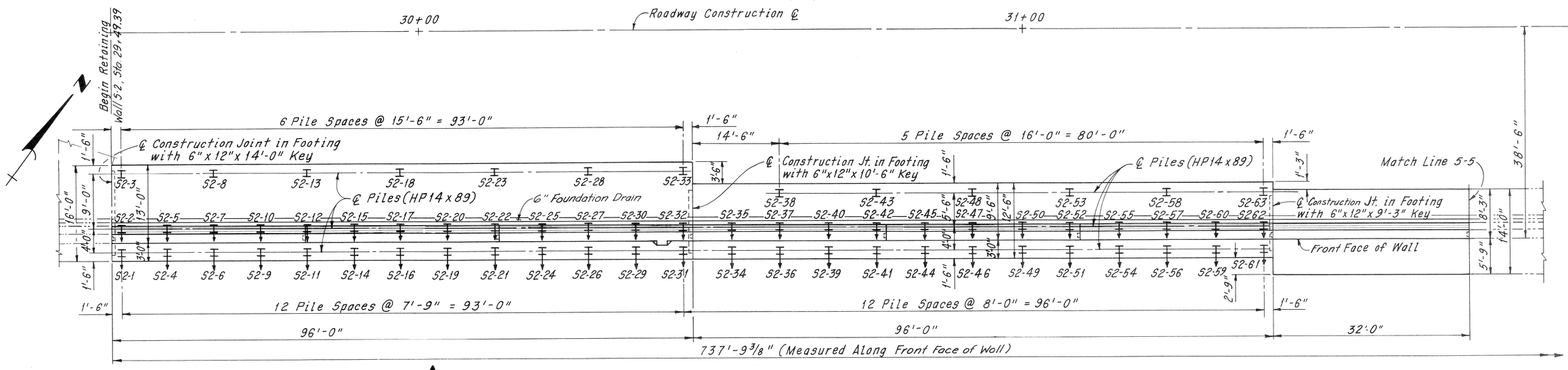

PLAN
Scale: 1/8" = 1'-0"
(Barrier not shown)

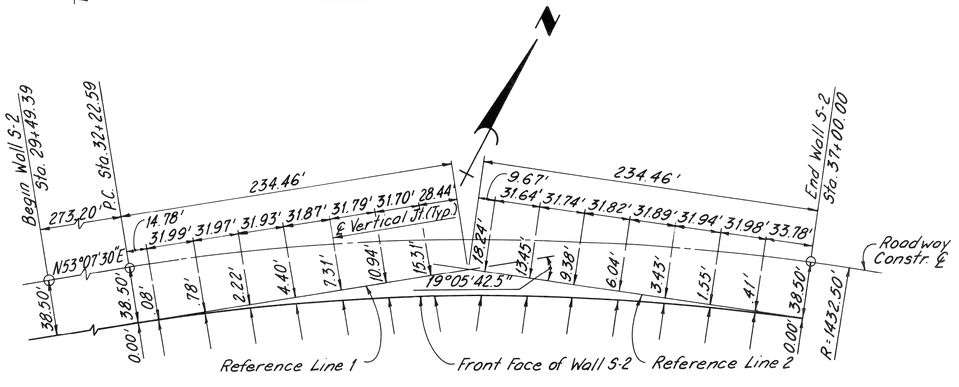

LAYOUT DIAGRAM - WALL S-2
No Scale

NOTE:
THE PORTION OF RETAINING WALL S-2 LOCATED ON A HORIZONTAL CURVE SHALL BE CONSTRUCTED ON CHORDS BETWEEN VERTICAL JOINTS, VERTICAL JOINT AND P.C. OR VERTICAL JOINT AND END OF WALL. OFFSETS TO THE VERTICAL JOINTS ARE GIVEN ON THE LAYOUT DIAGRAM - WALL S-2.

NOTE:
FOR RETAINING WALL NOTES SEE RETAINING WALL S-1, SHEET S-18.

COOR'D	DESCRIPTION	DR'N	CK'D	AP'VD	DATE
REVISIONS LOCATED BY COORDINATES ON SHEET					

REFERENCE DRAWINGS

DESIGNED BY	D. Soh
DRAWN BY	C. Cvitkovich
TRACED BY	C. Polk
CHECKED BY	J. Vargo

CITY OF DETROIT
JEFFERSON/CONNER INDUSTRIAL REVITALIZATION PROJECT
— MACK AVENUE IMPROVEMENTS —

MADISON MADISON INTERNATIONAL OF MICHIGAN
in association with
HNTB HOWARD NEEDLES TAMMEN & BERGENDOFF

MACK AVENUE OVER CONRAIL

RETAINING WALL S-2

SHEET 5-22 OF 117 SHEETS
JOB NO. 8627
SCALE: AS SHOWN
DATE SEPTEMBER 3, 1987

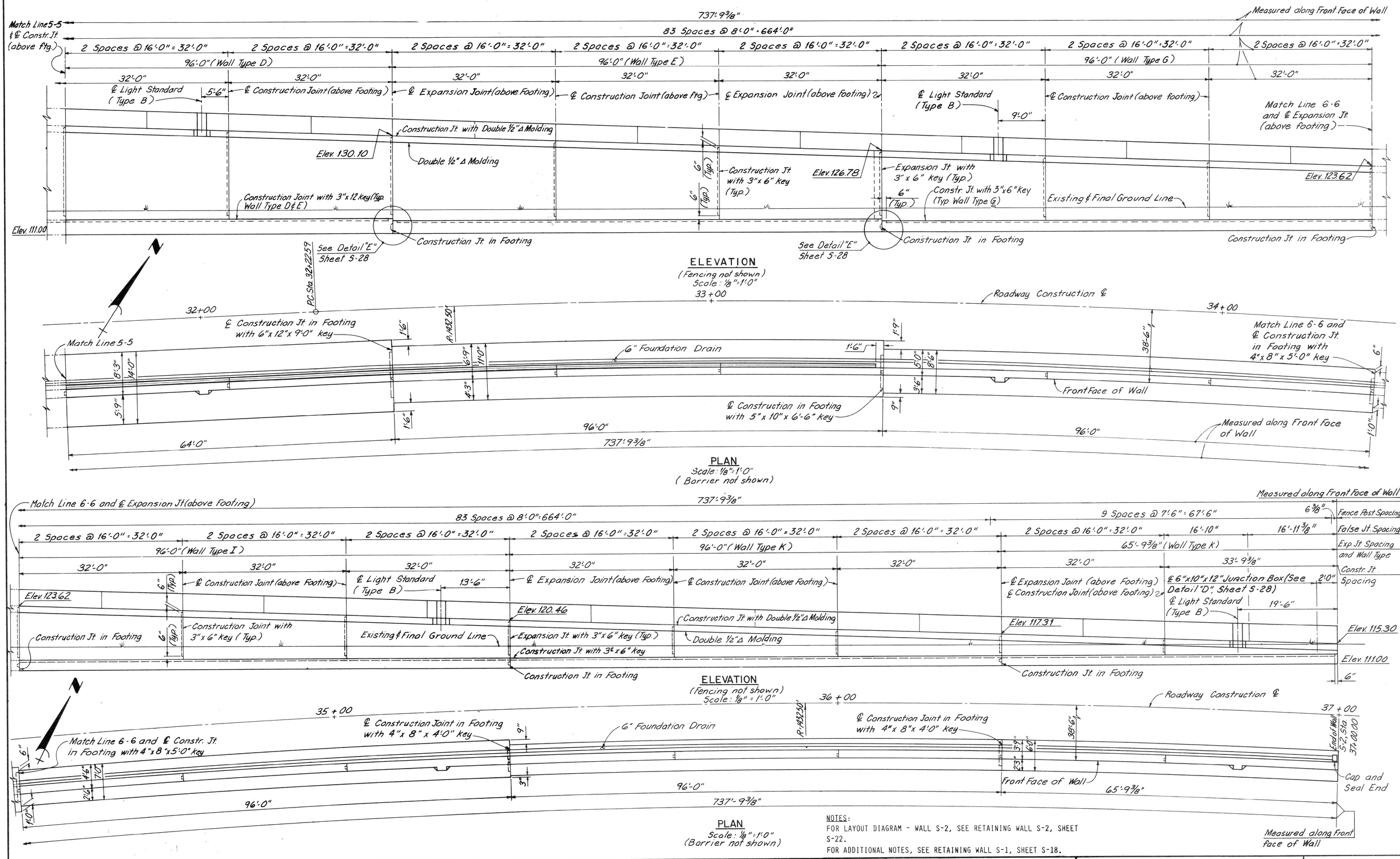

NOTES:
FOR LAYOUT DIAGRAM - WALL S-2, SEE RETAINING WALL S-2, SHEET S-22.
FOR ADDITIONAL NOTES, SEE RETAINING WALL S-1, SHEET S-18.

COOR'D	DESCRIPTION	DR'N	CK'D	AP'VD	DATE

REVISIONS LOCATED BY COORDINATES ON SHEET

REFERENCE DRAWINGS

DESIGNED BY	D. Soh
DRAWN BY	C. Cvitkovich
TRACED BY	P. Koszkoldo
CHECKED BY	J. Vargo

CITY OF DETROIT
JEFFERSON/CONNER INDUSTRIAL REVITALIZATION PROJECT
— MACK AVENUE IMPROVEMENTS —

MADISON MADISON INTERNATIONAL OF MICHIGAN
in association with
HNTB HOWARD NEEDLES TAMMEN & BERGENDOFF

MACK AVENUE OVER CONRAIL

RETAINING WALL S-2

SHEET 5-23 OF 117 SHEETS
JOB NO. 8627
SCALE: AS SHOWN
DATE SEPTEMBER 3, 1987

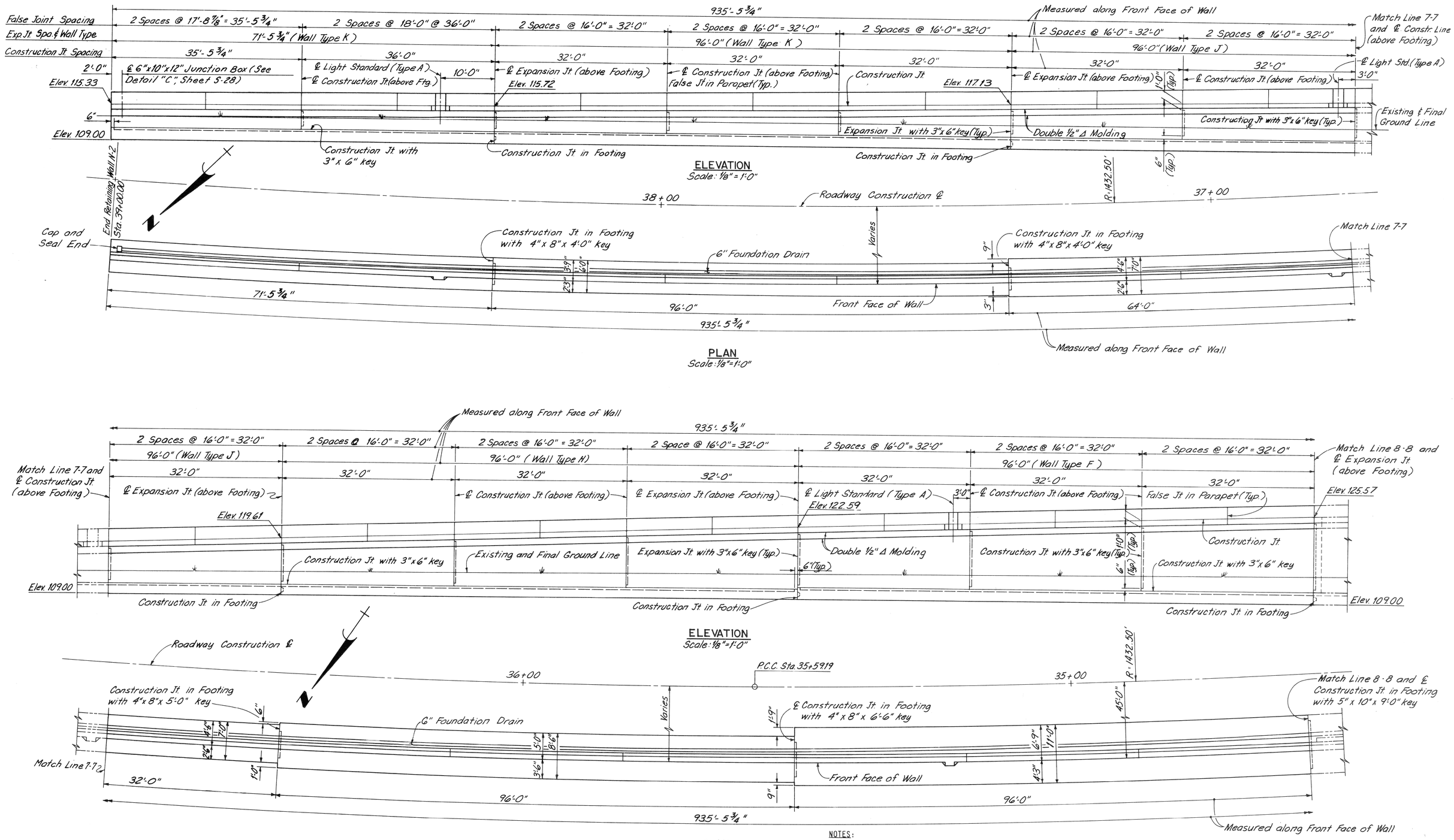

NOTES:
FOR LAYOUT DIAGRAM - WALL N-2, SEE RETAINING WALL N-2, SHEET S-26.

FOR ADDITIONAL NOTES, SEE RETAINING WALL S-1, SHEET S-18.

COOR'D	DESCRIPTION	DR'N	CK'D	AP'VD	DATE
REVISIONS LOCATED BY COORDINATES ON SHEET					

REFERENCE DRAWINGS

DESIGNED BY	D. Soh
DRAWN BY	C. Cvitkovich
TRACED BY	P. Koszkolda
CHECKED BY	J. Vargo

CITY OF DETROIT
JEFFERSON/CONNER INDUSTRIAL REVITALIZATION PROJECT
— MACK AVENUE IMPROVEMENTS —

MADISON MADISON INTERNATIONAL OF MICHIGAN
in association with
HNTB HOWARD NEEDLES TAMMEN & BERGENDOFF

MACK AVENUE OVER CONRAIL

RETAINING WALL N-2

SHEET 524 OF 117 SHEETS
JOB NO. 8627
SCALE: AS SHOWN
DATE SEPTEMBER 3, 1987

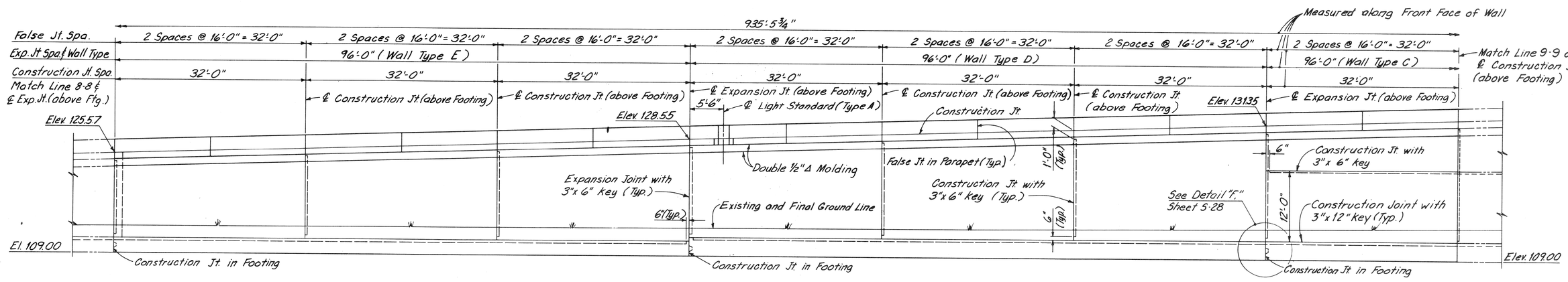

ELEVATION
Scale: 1/8"=1'-0"
(Piles not shown)

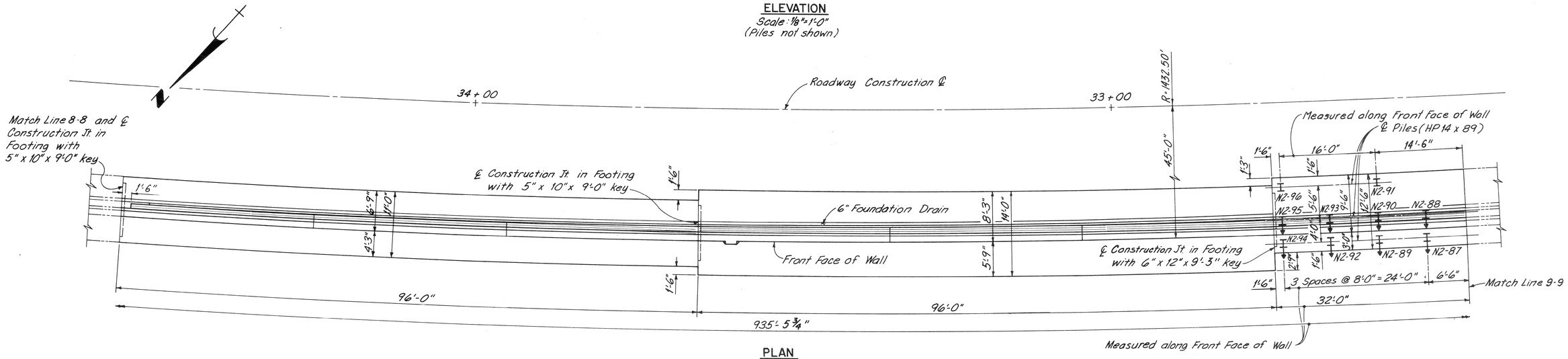

PLAN
Scale: 1/8"=1'-0"

NOTES:
FOR LAYOUT DIAGRAM - WALL N-2, SEE RETAINING WALL N-2, SHEET S-26.

FOR ADDITIONAL NOTES, SEE RETAINING WALL S-1, SHEET S-18.

COOR'D	DESCRIPTION	DR'N	CK'D	AP'VD	DATE
REVISIONS LOCATED BY COORDINATES ON SHEET					

REFERENCE DRAWINGS

DESIGNED BY	D. Soh
DRAWN BY	C. Cvitkovich
TRACED BY	P. Koszkalda
CHECKED BY	J. Vargo

CITY OF DETROIT
JEFFERSON/CONNER INDUSTRIAL REVITALIZATION PROJECT
— MACK AVENUE IMPROVEMENTS —

MADISON MADISON INTERNATIONAL OF MICHIGAN
in association with
HNTB HOWARD NEEDLES TAMMEN & BERGENDOFF

MACK AVENUE OVER CONRAIL

RETAINING WALL N-2

SHEET S25 OF 117 SHEETS
JOB NO. 8627
SCALE: AS SHOWN
DATE SEPTEMBER 3, 1987

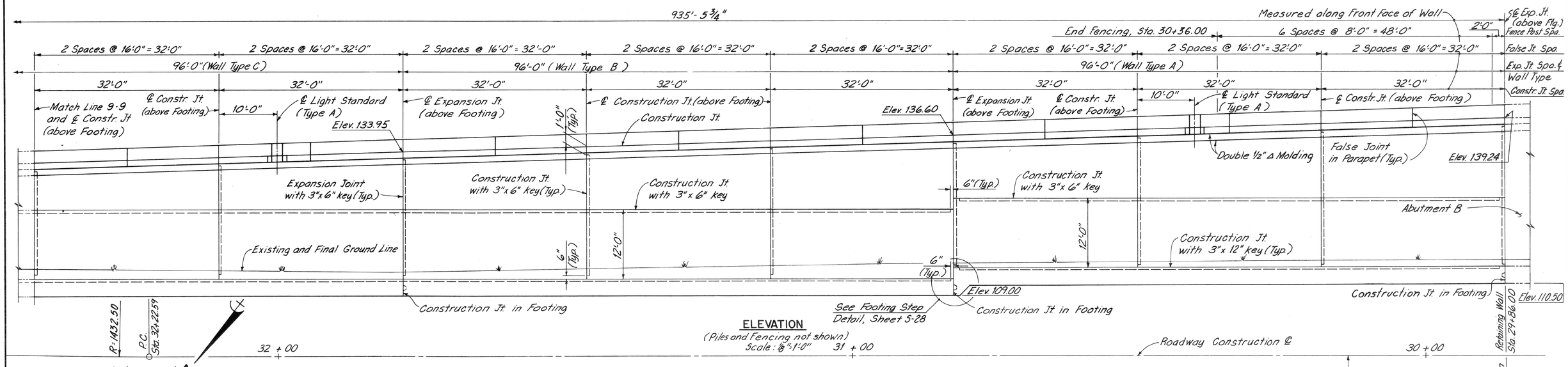

ELEVATION
(Piles and Fencing not shown)
Scale: ⅛"=1'-0"

PLAN
Scale: ⅛"=1'-0"

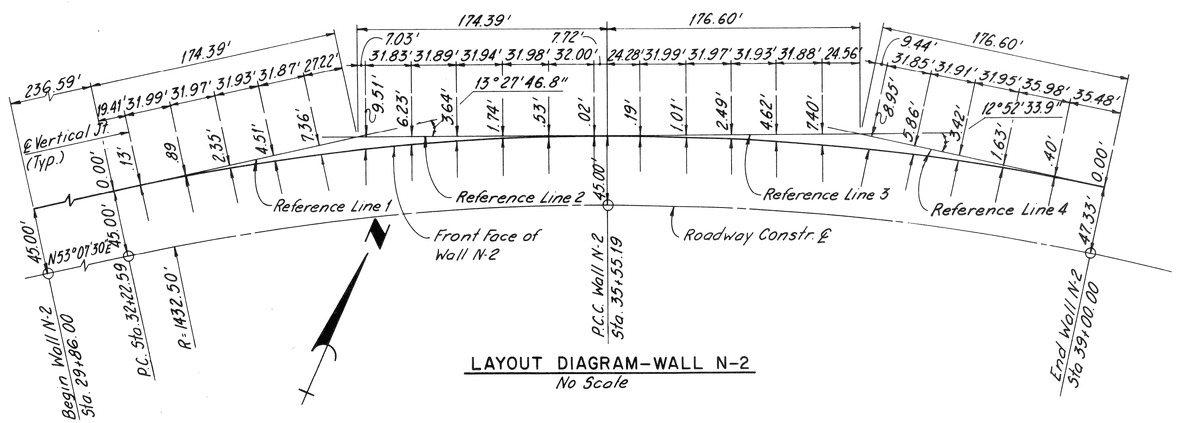

LAYOUT DIAGRAM—WALL N-2
No Scale

NOTE:
THE PORTION OF RETAINING WALL N-2 LOCATED ON A HORIZONTAL CURVE SHALL BE CONSTRUCTED ON CHORDS BETWEEN VERTICAL JOINTS, VERTICAL JOINT AND P.C. OR VERTICAL JOINT AND END OF WALL. OFFSETS TO THE VERTICAL JOINTS ARE GIVEN ON THE LAYOUT DIAGRAM - WALL N-2.

NOTE:
FOR RETAINING WALL NOTES SEE RETAINING WALL S-1, SHEET S-18.

COOR'D	DESCRIPTION	DR'N	CK'D	AP'VD	DATE
REVISIONS LOCATED BY COORDINATES ON SHEET					

REFERENCE DRAWINGS

DESIGNED BY	D. Soh
DRAWN BY	C. Cvitkovich
TRACED BY	P. Koszkalda
CHECKED BY	J. Vargo

CITY OF DETROIT
JEFFERSON/CONNER INDUSTRIAL REVITALIZATION PROJECT
— MACK AVENUE IMPROVEMENTS —

MADISON MADISON INTERNATIONAL OF MICHIGAN
in association with
HNTB HOWARD NEEDLES TAMMEN & BERGENDOFF

MACK AVENUE OVER CONRAIL
RETAINING WALL N-2

SHEET S26 OF 117 SHEETS
JOB NO. 8627
SCALE: AS SHOWN
DATE SEPTEMBER 3, 1987

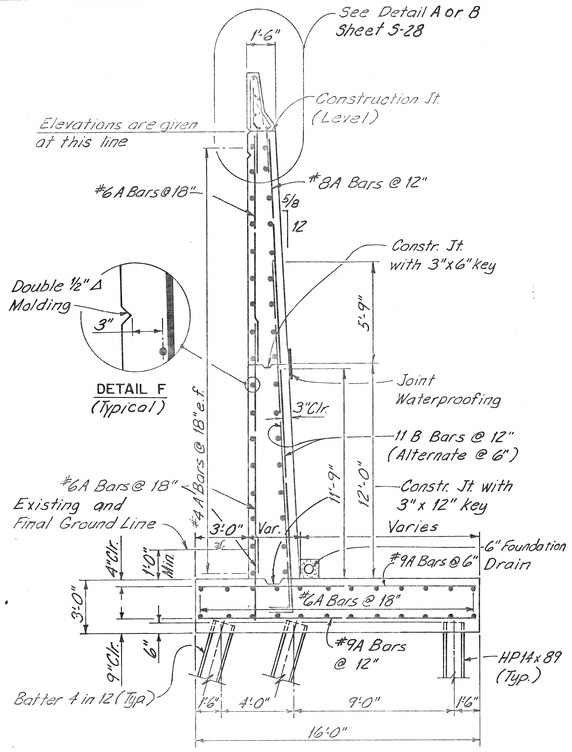

WALL TYPE A

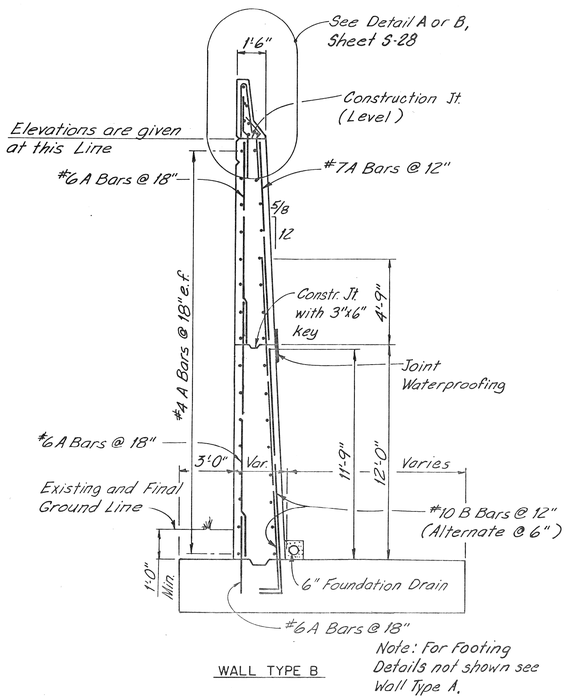

WALL TYPE B

Note: For Footing Details not shown see Wall Type A.

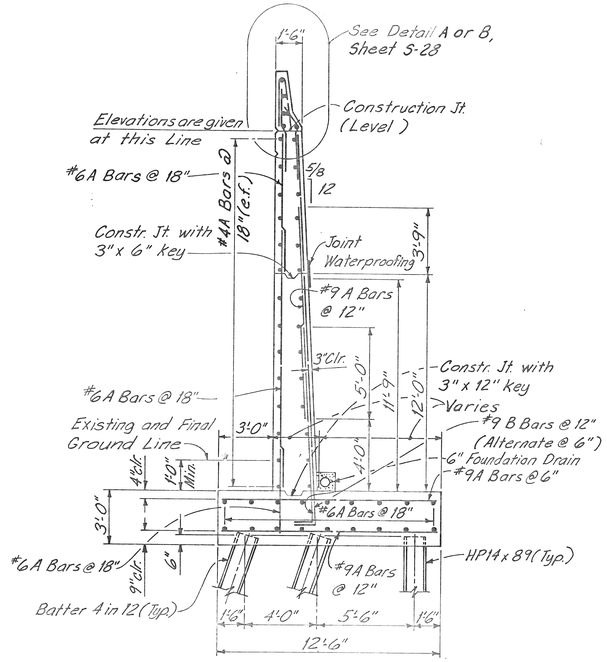

WALL TYPE C

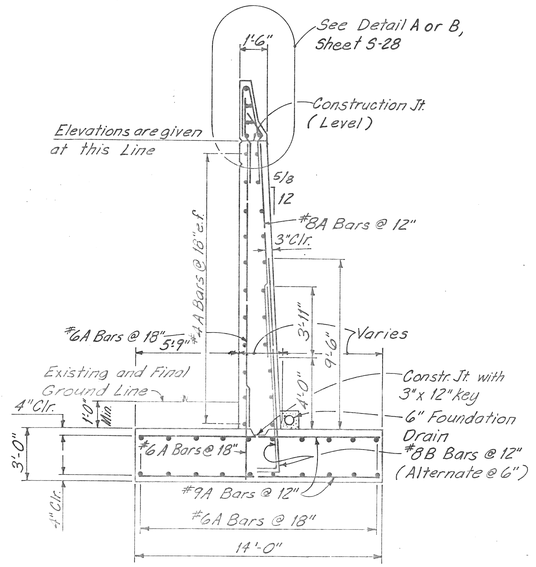

WALL TYPE D

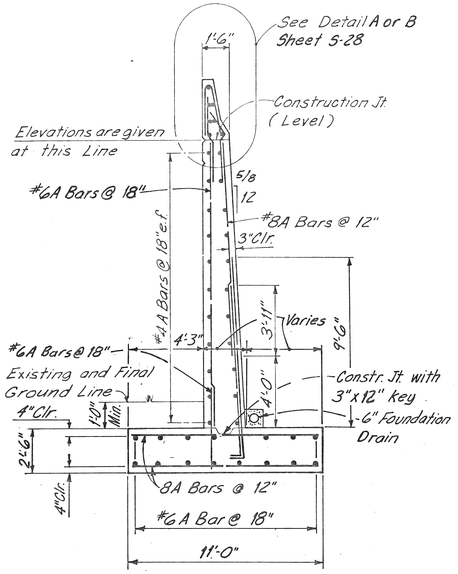

WALL TYPE E

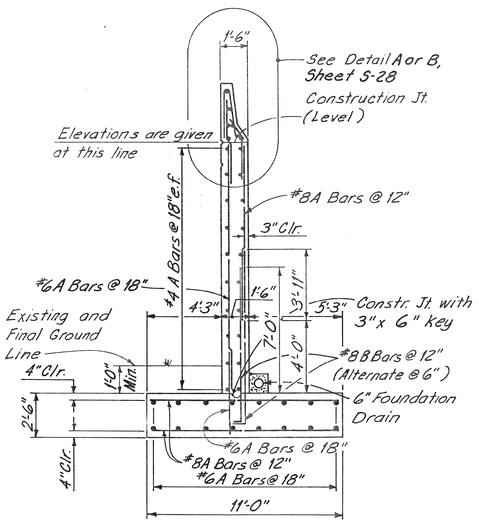

WALL TYPE F

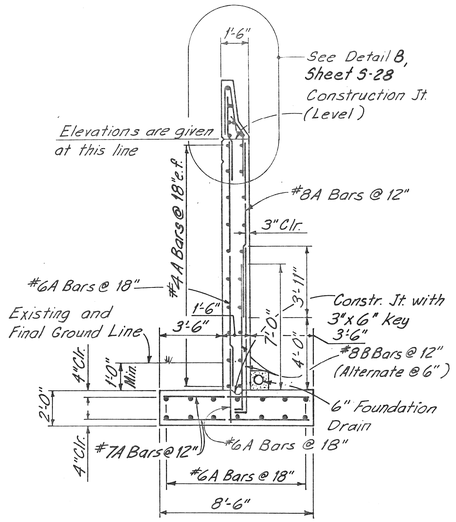

WALL TYPE G

WALL AND FOOTING REINFORCEMENT
Scale: 1/4" = 1'-0"

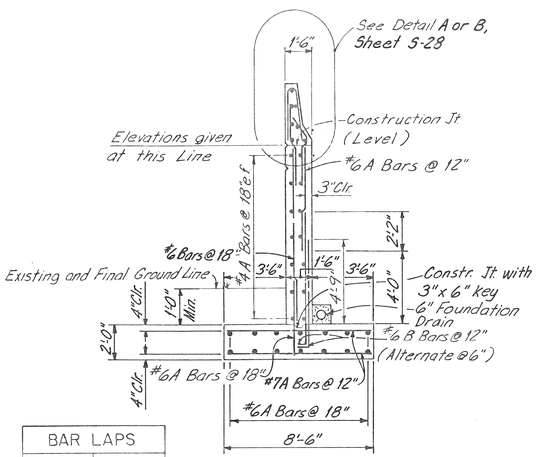

WALL TYPE H

BAR LAPS	
BARS	LAP
#4	1'-4"
#5	1'-8"
#6-Horz.Rfg.	3'-1"
#6-Vert.	2'-2"

Note: Bar Laps are Typical except as shown.

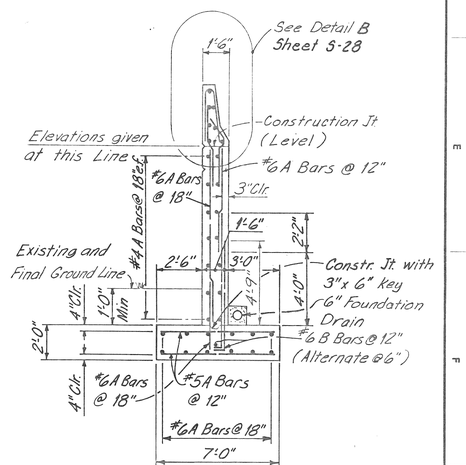

WALL TYPE I

NOTES:
FOR LOCATION OF WALL TYPES A THRU K SEE RETAINING WALL SHEETS S-18 THRU S-26.

FOR ADDITIONAL NOTES SEE RETAINING WALL S-1, SHEET S-18.

Sections thru South Retaining Walls shown, Sections thru North Retaining Walls similar.
For Wall Type J & K, see Retaining Wall Details, Sheet S-28

COOR'D	DESCRIPTION	DR'N	CK'D	AP'VD	DATE
REVISIONS LOCATED BY COORDINATES ON SHEET					

REFERENCE DRAWINGS

DESIGNED BY: D. Sah
DRAWN BY: C. Cvitkovich
TRACED BY: B. Vermes, J. Vargo, P. Koszakalda
CHECKED BY: J. Vargo

CITY OF DETROIT
JEFFERSON/CONNER INDUSTRIAL REVITALIZATION PROJECT
— MACK AVENUE IMPROVEMENTS —

MADISON MADISON INTERNATIONAL OF MICHIGAN
in association with
HNTB HOWARD NEEDLES TAMMEN & BERGENDOFF

MACK AVENUE OVER CONRAIL
RETAINING WALL DETAILS

SHEET S27 OF 117 SHEETS
JOB NO. 8627
SCALE: AS SHOWN
DATE SEPTEMBER 3, 1987

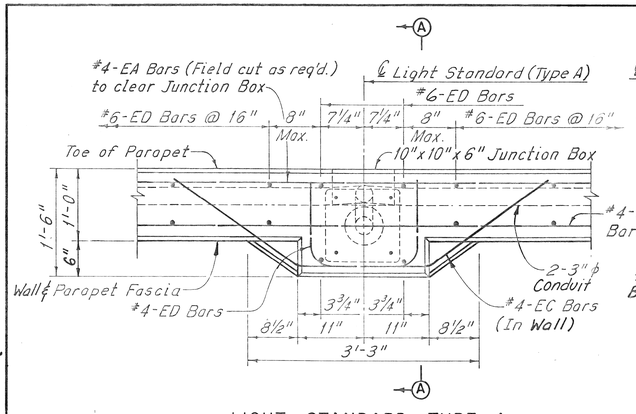

LIGHT STANDARD - TYPE A
Scale: 1"=1'-0"

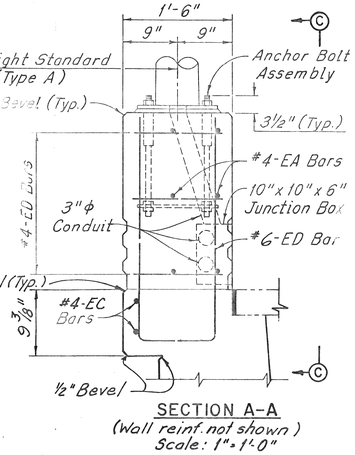

SECTION A-A
(Wall reinf. not shown)
Scale: 1"=1'-0"

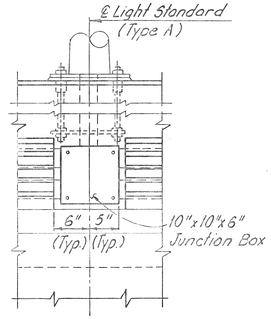

VIEW C-C
Scale: 1"=1'-0"

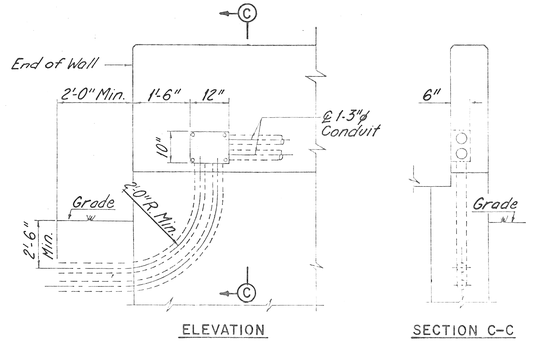

ELEVATION

SECTION C-C

DETAIL "C"
No Scale

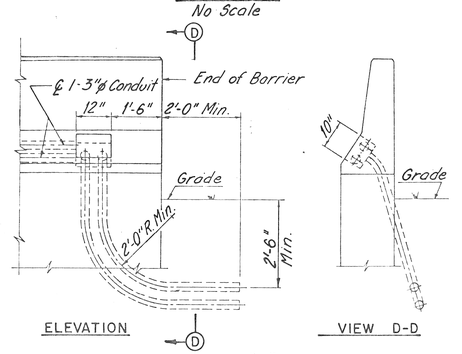

ELEVATION

VIEW D-D

DETAIL "D"
No Scale

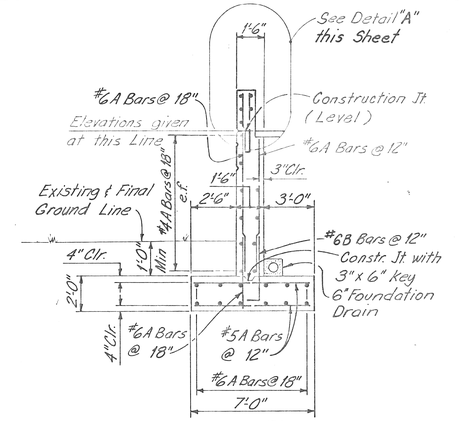

WALL TYPE J

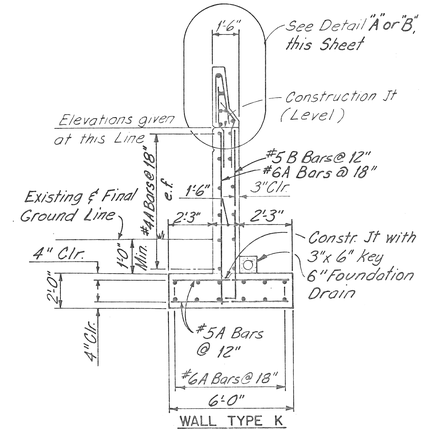

WALL TYPE K

WALL AND FOOTING REINFORCEMENT
Scale: ¼"=1'-0"

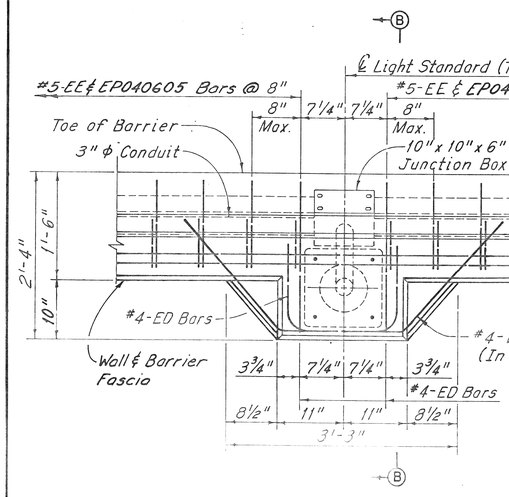

LIGHT STANDARD - TYPE B
Scale: 1"=1'-0"

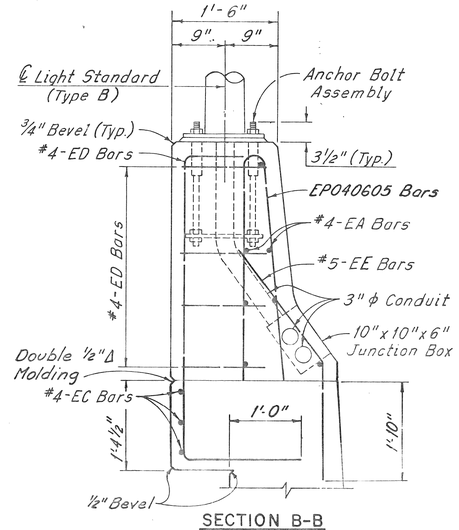

SECTION B-B
Wall reinf. not shown)
Scale: 1"=1'-0"

BAR LAPS	
BARS	LAP
#4	1'-4"
#5	1'-8"
#6-Hor. Ftg.	3'-1"
#6-Vert.	2'-2"

Note:
Bar Laps are Typical except as shown.

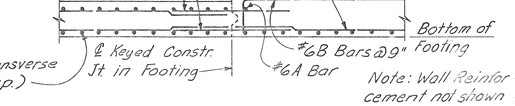

Note: Wall Reinforcement not shown

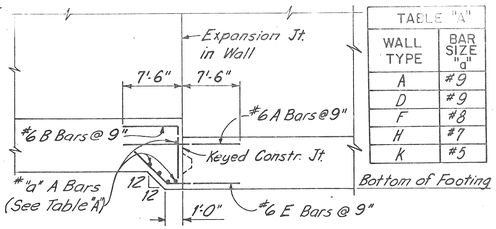

TABLE "A"	
WALL TYPE	BAR SIZE "a"
A	#9
D	#9
F	#8
H	#7
K	#5

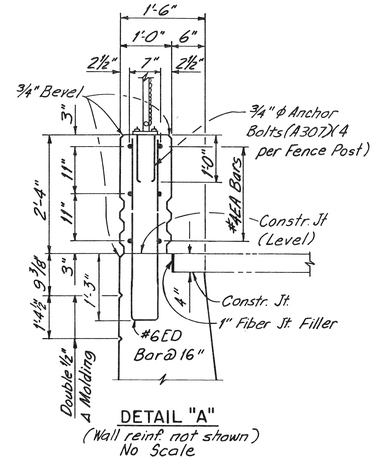

DETAIL "A"
(Wall reinf. not shown)
No Scale

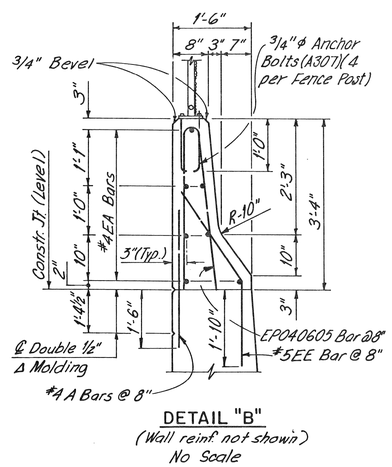

DETAIL "B"
(Wall reinf. not shown)
No Scale

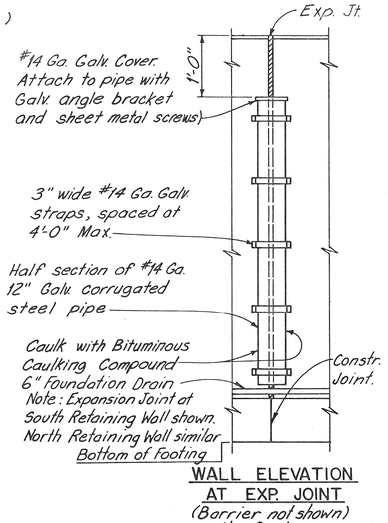

WALL ELEVATION AT EXP. JOINT
(Barrier not shown)
No Scale

DETAIL "E"
No Scale

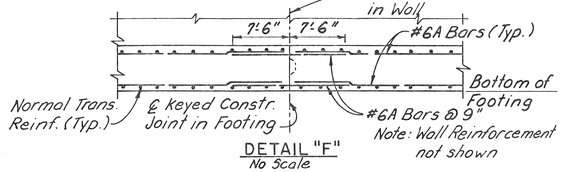

DETAIL "F"
No Scale

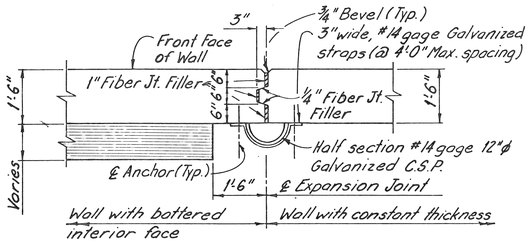

WALL THICKNESS TRANSITION DETAIL
Scale: ½"=1'-0"

FOOTING STEP DETAIL
No Scale
(Normal Reinforcement not shown)

NOTES:
FOR ARCHITECTURAL TREATMENT OF PARAPET, SEE DECK DETAILS, SHEET S-45.
FOR FENCE POST DETAILS, SEE DECK DETAILS, SHEET S-45.
FOR ADDITIONAL LIGHT STANDARD DETAILS SEE DECK DETAILS, SHEET S-46.
FOR LOCATION OF WALL TYPES J AND K SEE RETAINING WALL SHEETS S-18 THRU S-26.

FOR ADDITIONAL NOTES SEE RETAINING WALL S-1, SHEET S-18.

COOR'D	DESCRIPTION	DR'N	CK'D	AP'VD	DATE
REVISIONS LOCATED BY COORDINATES ON SHEET					

REFERENCE DRAWINGS

DESIGNED BY	D. Soh
DRAWN BY	C. Cvitkovich
TRACED BY	B. Varmes, J. Vargo, P. Koszkalda
CHECKED BY	J. Vargo

CITY OF DETROIT
JEFFERSON/CONNER INDUSTRIAL REVITALIZATION PROJECT
— MACK AVENUE IMPROVEMENTS —

MADISON MADISON INTERNATIONAL OF MICHIGAN
in association with
HNTB HOWARD NEEDLES TAMMEN & BERGENDOFF

MACK AVENUE OVER CONRAIL

RETAINING WALL DETAILS

SHEET	528 OF 117 SHEETS
JOB NO.	8627
SCALE:	AS SHOWN
DATE	SEPTEMBER 3, 1987

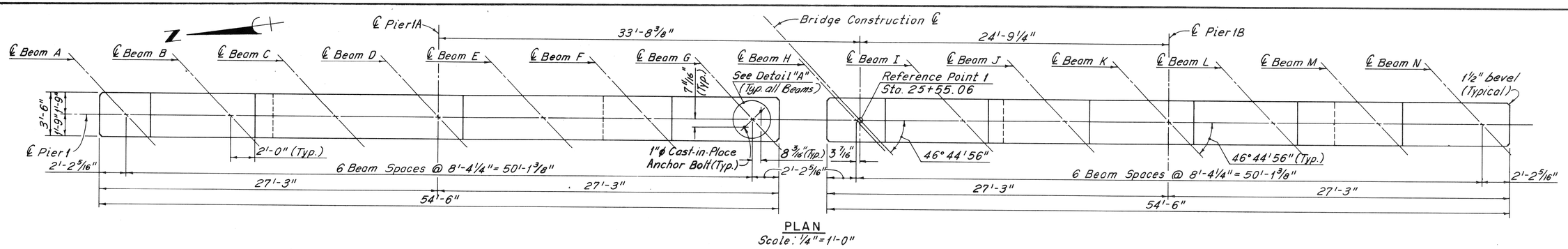

PLAN
Scale: 1/4" = 1'-0"

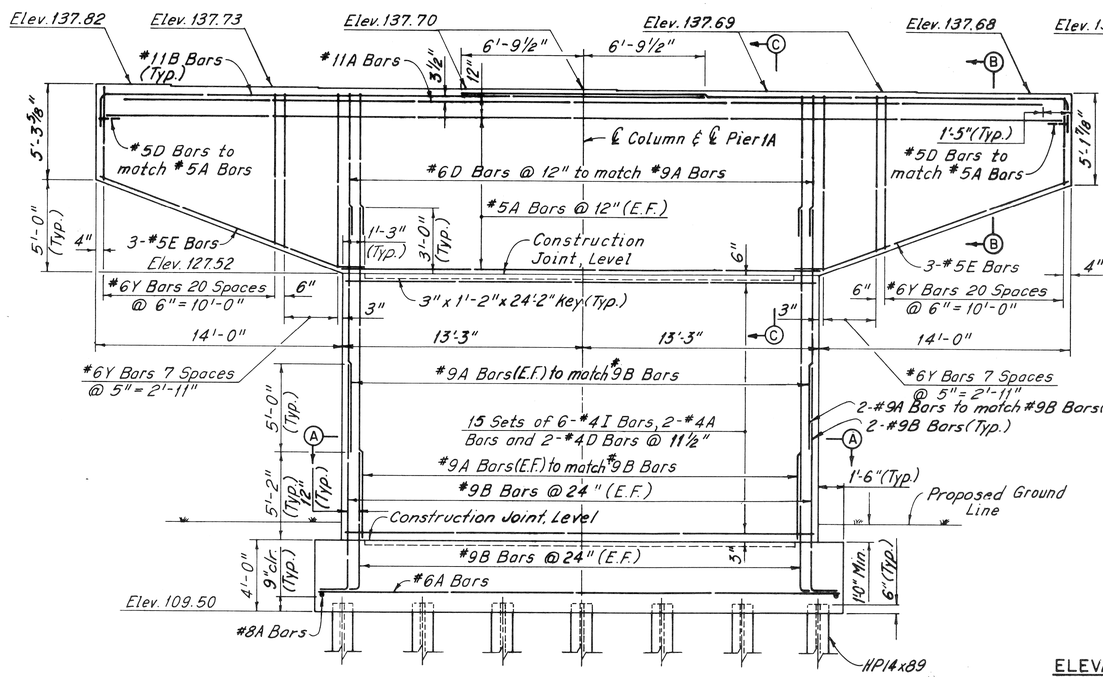

PIER 1A

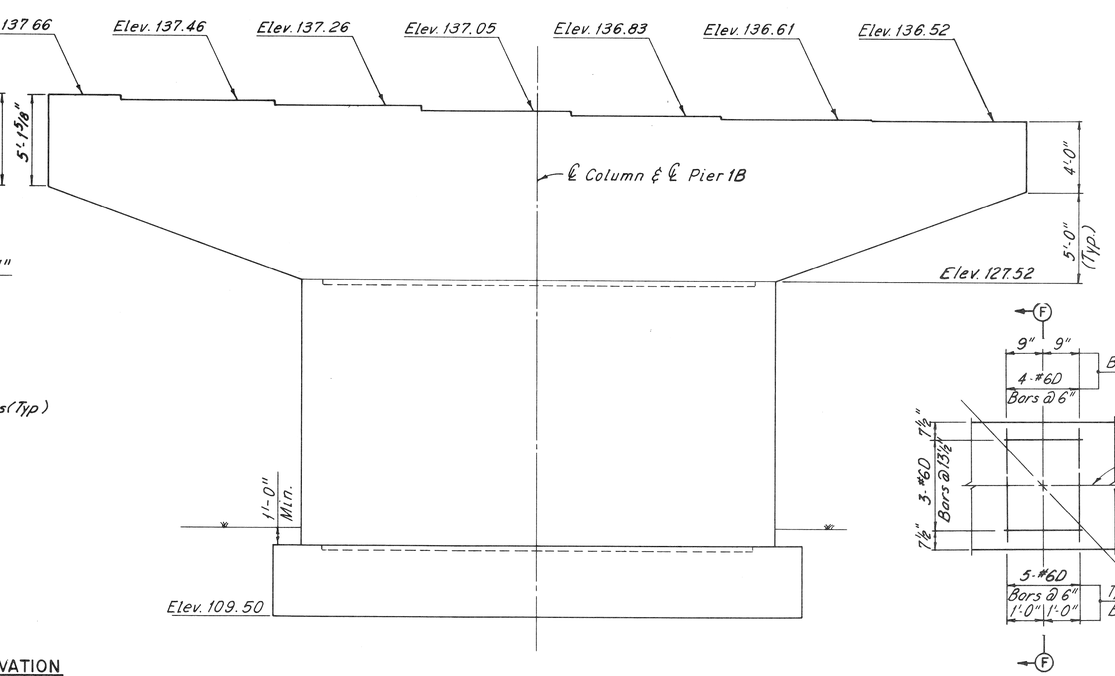

ELEVATION
Scale: 1/4" = 1'-0"

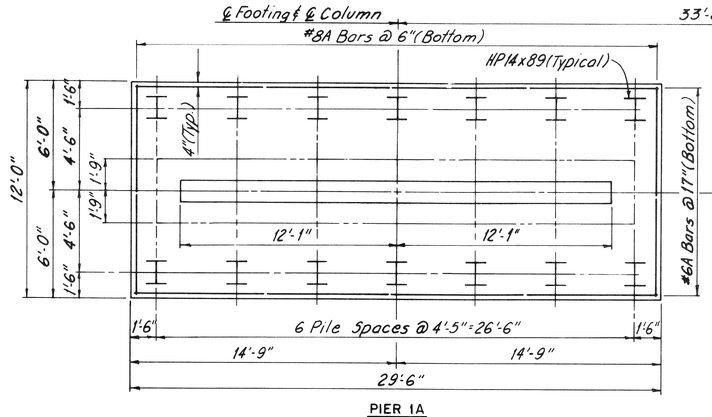

PIER 1A

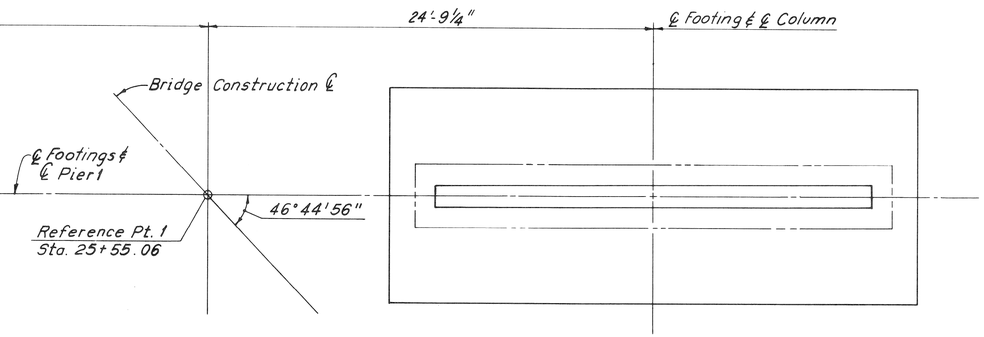

FOOTING PLAN
Scale: 1/4" = 1'-0"

PIER 1B

DETAIL "A"
No Scale

NOTES:

FOR PILING REQUIREMENTS, SEE FOOTING LAYOUT PLAN, SHEET S-12.

ALL DIMENSIONS, ELEVATIONS, CALL-OUTS AND REINFORCEMENT FOR PIER 1B SHALL BE IDENTICAL TO PIER 1A, EXCEPT AS SHOWN.

DRILLING HOLES FOR ANCHOR BOLTS AND POSITION DOWELS SHALL NOT BE PERMITTED.

FOR ANCHOR BOLT AND POSITION DOWEL DETAILS, SEE BEARING DETAILS, SHEET S-40.

FOR SECTIONS A-A THRU C-C AND F-F SEE PIER DETAILS, SHEET S-33.

THE FOLLOWING ABBREVIATIONS ARE USED:

TYP. DENOTES TYPICAL
E.F. DENOTES EACH FACE
CLR. DENOTES CLEAR

COOR'D	DESCRIPTION	DR'N	CK'D	AP'VD	DATE
REVISIONS LOCATED BY COORDINATES ON SHEET					

REFERENCE DRAWINGS

DESIGNED BY	R. Snow
DRAWN BY	N. Farah
TRACED BY	D. Ressler
CHECKED BY	J. Vorgo

CITY OF DETROIT
JEFFERSON/CONNER INDUSTRIAL REVITALIZATION PROJECT
— MACK AVENUE IMPROVEMENTS —

MADISON MADISON INTERNATIONAL OF MICHIGAN
in association with
HNTB HOWARD NEEDLES TAMMEN & BERGENDOFF

MACK AVENUE OVER CONRAIL

PIER 1

SHEET 329 OF 117 SHEETS
JOB NO. 8627
SCALE: AS SHOWN
DATE SEPTEMBER 3, 1987

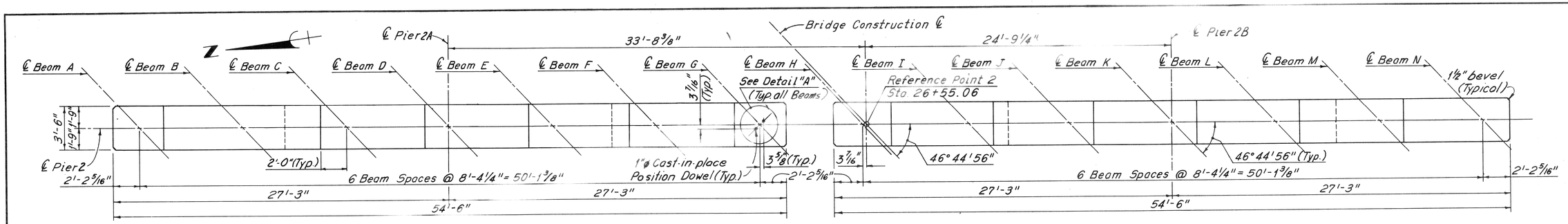

PLAN
Scale: 1/4" = 1'-0"

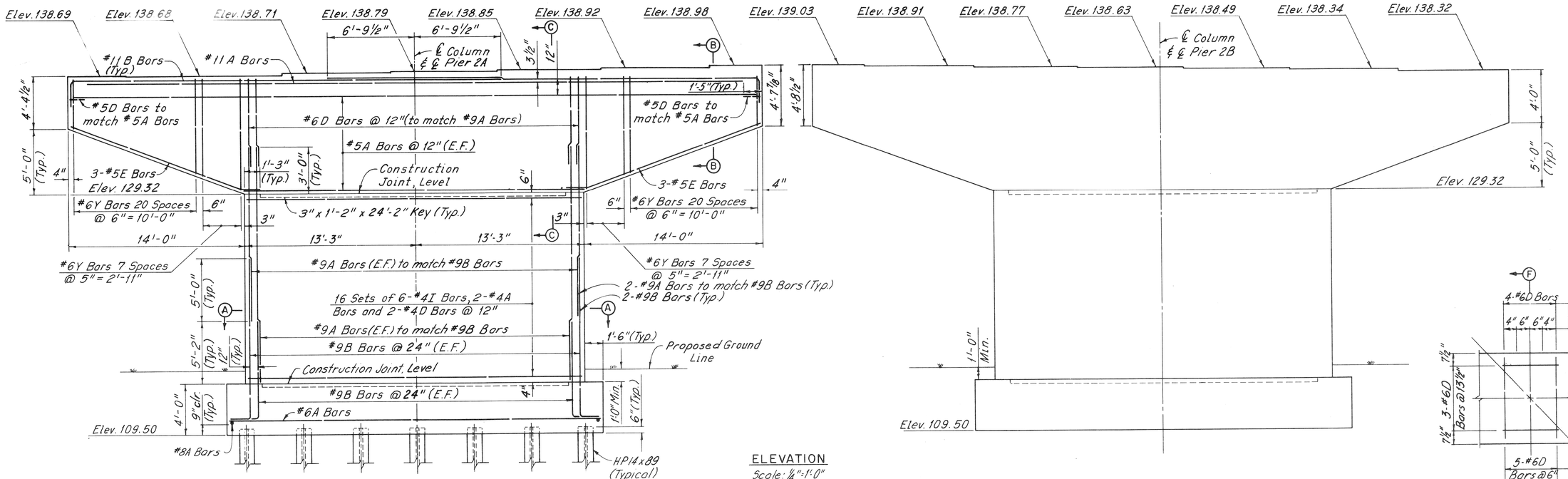

ELEVATION
Scale: 1/4" = 1'-0"

DETAIL "A"
No Scale

PIER 2A

FOOTING PLAN
Scale: 1/4" = 1'-0"

PIER 2B

NOTES:
ALL DIMENSIONS, ELEVATIONS, CALL-OUTS AND REINFORCEMENT FOR PIER 2B SHALL BE IDENTICAL TO PIER 2A, EXCEPT AS SHOWN.

FOR SECTIONS A-A THRU C-C AND F-F SEE PIER DETAILS, SHEET S-33.

FOR ADDITIONAL NOTES, SEE PIER 1, SHEET S-29.

COOR'D	DESCRIPTION	DR'N	CK'D	AP'VD	DATE

REVISIONS LOCATED BY COORDINATES ON SHEET

REFERENCE DRAWINGS

DESIGNED BY	R. Snow
DRAWN BY	N. Foroh
TRACED BY	D. Ressler
CHECKED BY	J. Vargo

CITY OF DETROIT
JEFFERSON/CONNER INDUSTRIAL REVITALIZATION PROJECT
— MACK AVENUE IMPROVEMENTS —

MADISON MADISON INTERNATIONAL OF MICHIGAN
in association with
HNTB HOWARD NEEDLES TAMMEN & BERGENDOFF

MACK AVENUE OVER CONRAIL

PIER 2

SHEET 530 OF 117 SHEETS
JOB NO. 8627
SCALE: AS SHOWN
DATE SEPTEMBER 3, 1987

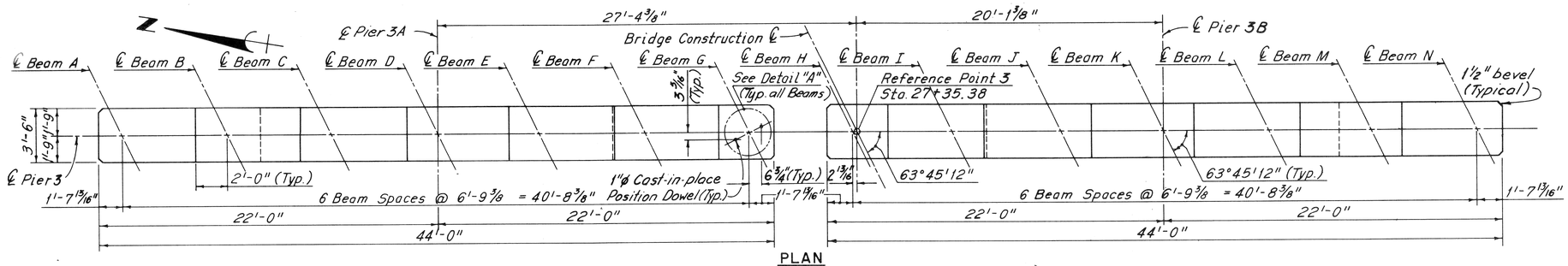

PLAN
Scale: 1/4" = 1'-0"

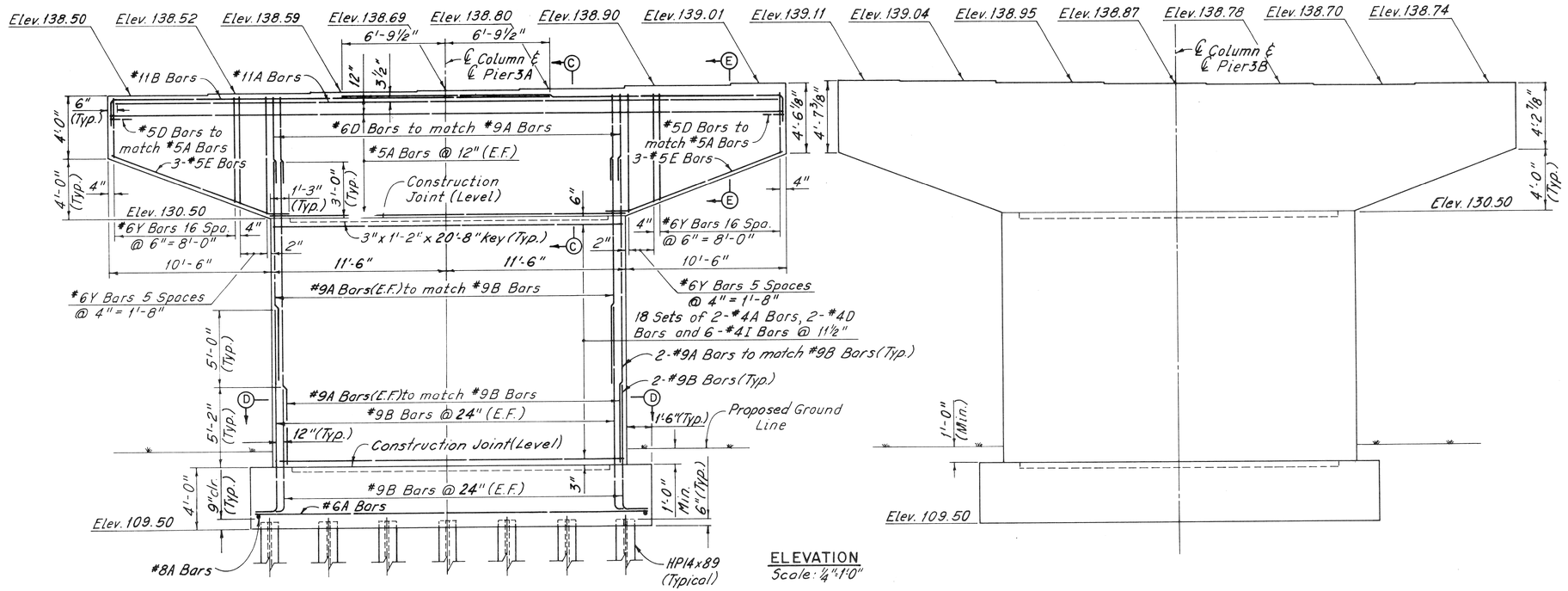

ELEVATION
Scale: 1/4" = 1'-0"

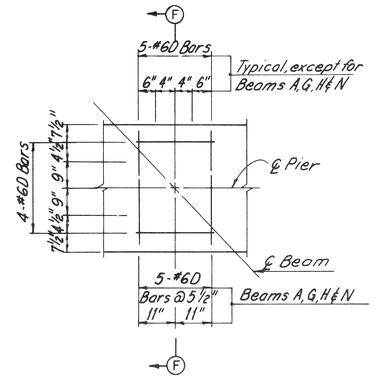

DETAIL "A"
No Scale

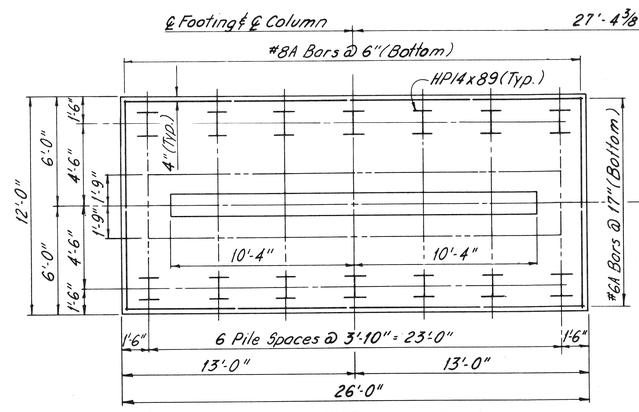

PIER 3A

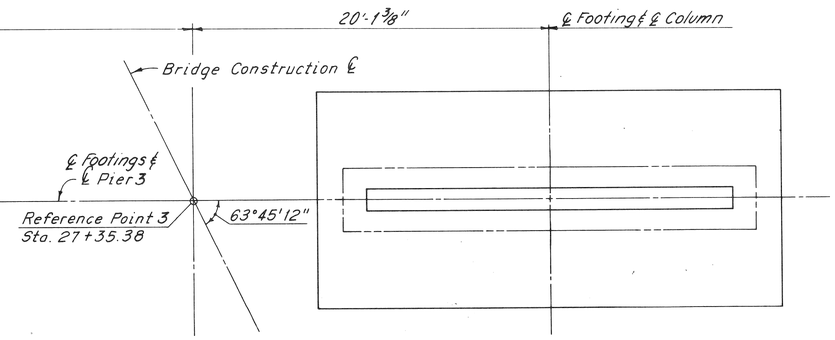

FOOTING PLAN
Scale: 1/4" = 1'-0"

PIER 3B

NOTES:
ALL DIMENSIONS, ELEVATIONS, CALL-OUTS AND REINFORCEMENT FOR PIER 3B SHALL BE IDENTICAL TO PIER 3A, EXCEPT AS SHOWN.

FOR SECTIONS C-C THRU F-F SEE PIER DETAILS SHEET S-33.

FOR ADDITIONAL NOTES, SEE PIER 1, SHEET S-29.

COOR'D	DESCRIPTION	DR'N	CK'D	AP'VD	DATE

REVISIONS LOCATED BY COORDINATES ON SHEET

REFERENCE DRAWINGS

DESIGNED BY	R. Snow
DRAWN BY	N. Farah
TRACED BY	D. Ressler
CHECKED BY	J. Vargo

CITY OF DETROIT
JEFFERSON/CONNER INDUSTRIAL REVITALIZATION PROJECT
— MACK AVENUE IMPROVEMENTS —

MADISON MADISON INTERNATIONAL OF MICHIGAN
in association with
HNTB HOWARD NEEDLES TAMMEN & BERGENDOFF

MACK AVENUE OVER CONRAIL

PIER 3

SHEET 531 OF 117 SHEETS
JOB NO. 8627
SCALE: AS SHOWN
DATE SEPTEMBER 3, 1987

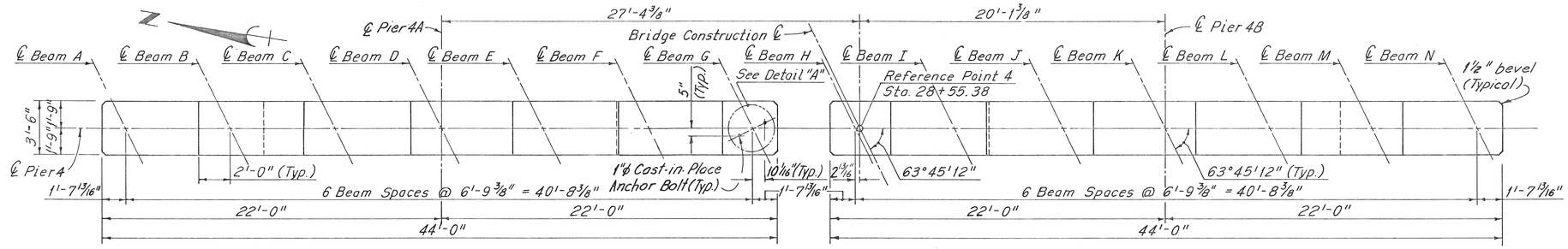

PLAN
Scale: 1/4"=1'-0"

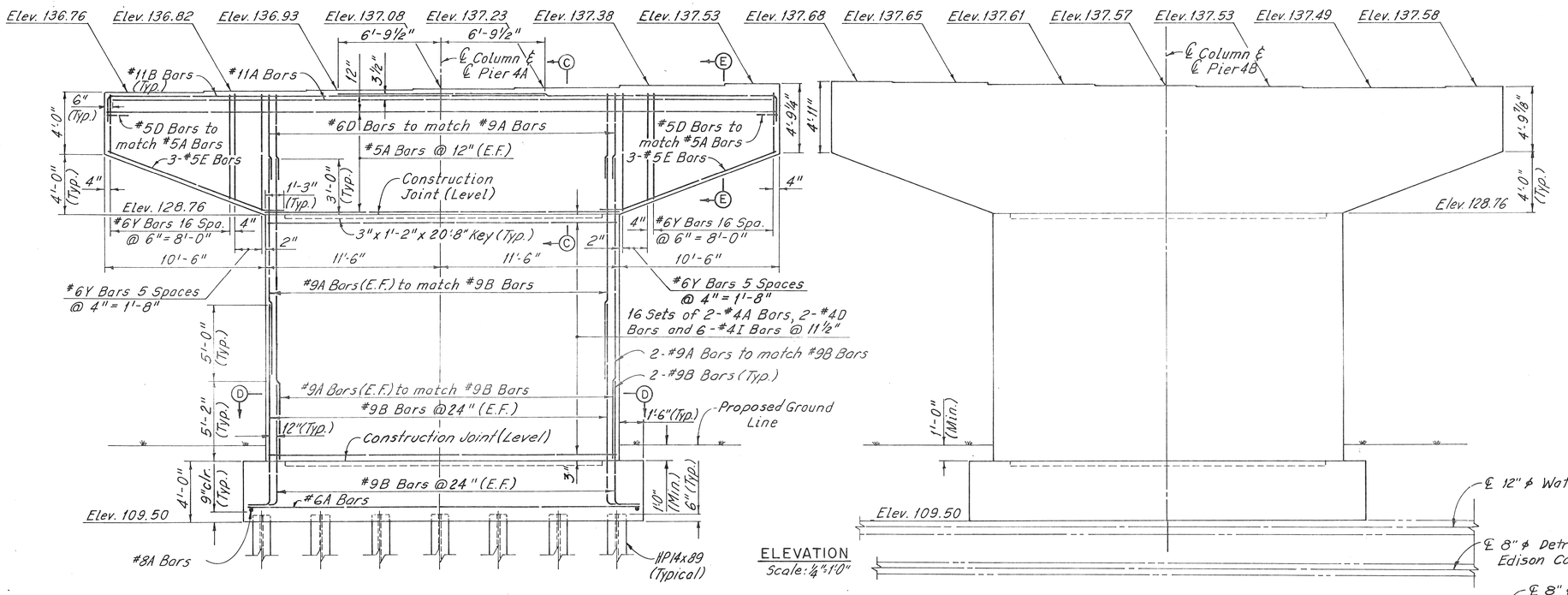

ELEVATION
Scale: 1/4"=1'-0"

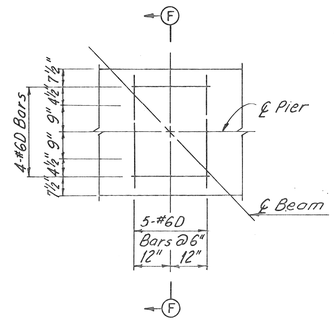

DETAIL "A"
No Scale

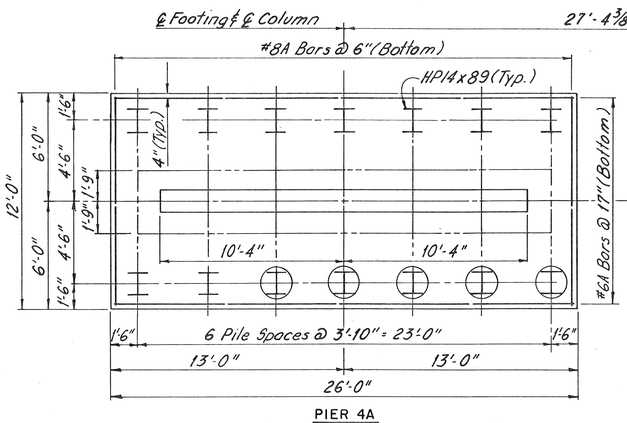

PIER 4A

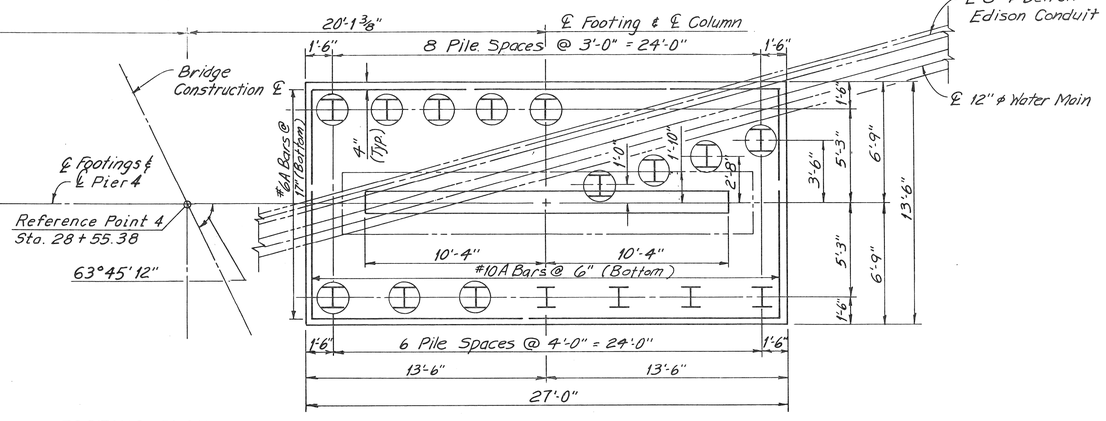

FOOTING PLAN
Scale: 1/4"=1'-0"

PIER 4B

NOTES:

[illegible] MICHIGAN (EFFECTIVE AUG. 1, 1974) THE CONTRACTOR SHALL NOTIFY IN ADVANCE OF CONSTRUCTION ALL PUBLIC AND PRIVATE OWNERS HAVING EXISTING FACILITIES IN OR NEAR THE IMMEDIATE WORKING AREA.

EXISTING UTILITIES AS SHOWN INDICATE APPROXIMATE LOCATION ONLY AS DISCLOSED BY UTILITY COMPANY RECORDS AND NO GUARANTEE IS MADE EITHER AS TO COMPLETENESS OR ACCURACY.

BEFORE ANY FOUNDATION PILING IS DRIVEN, ALL EXISTING UTILITIES SHALL BE LOCATED AND ANY DEVIATION FROM THE LOCATIONS SHOWN ON THESE PLANS SHALL BE PROMPTLY REPORTED TO THE ENGINEER. THE DESIGN OFFICE SHALL BE NOTIFIED AND ADJUSTMENTS MADE ACCORDINGLY BEFORE ANY FOUNDATION PILING IS DRIVEN.

Ⓣ DENOTES PILE TO BE PREBORED TO A DEPTH OF 10-FT BELOW EXISTING GRADE.

THE CONTRACTOR SHALL PROVIDE A 3-IN. MINIMUM OPEN SPACE BETWEEN THE BOTTOM OF FOOTING AND TOP OF GROUND OVER THE UTILITIES. THE WIDTH OF THE OPEN SPACE SHALL EXTEND FROM 1-FT. OUTSIDE THE DE CONDUIT TO 1-FT. OUTSIDE THE WATER MAIN.

ALL DIMENSIONS, ELEVATIONS, CALL-OUTS AND REINFORCEMENT FOR PIER 4B SHALL BE IDENTICAL TO PIER 4A, EXCEPT AS SHOWN.

FOR SECTIONS C-C THRU F-F SEE PIER DETAILS, SHEET S-33.

FOR ADDITIONAL NOTES, SEE PIER 1, SHEET S-29.

COOR'D	DESCRIPTION	DR'N	CK'D	AP'VD	DATE
REVISIONS LOCATED BY COORDINATES ON SHEET					

REFERENCE DRAWINGS

DESIGNED BY	R. Snow
DRAWN BY	N. Farah
TRACED BY	D. Ressler
CHECKED BY	J. Vargo

CITY OF DETROIT
JEFFERSON/CONNER INDUSTRIAL REVITALIZATION PROJECT
— MACK AVENUE IMPROVEMENTS —

MADISON MADISON INTERNATIONAL OF MICHIGAN
in association with
HNTB
HOWARD NEEDLES TAMMEN & BERGENDOFF

MACK AVENUE OVER CONRAIL

PIER 4

SHEET 532 OF 117 SHEETS
JOB NO. 8627
SCALE: AS SHOWN
DATE SEPTEMBER 3, 1987

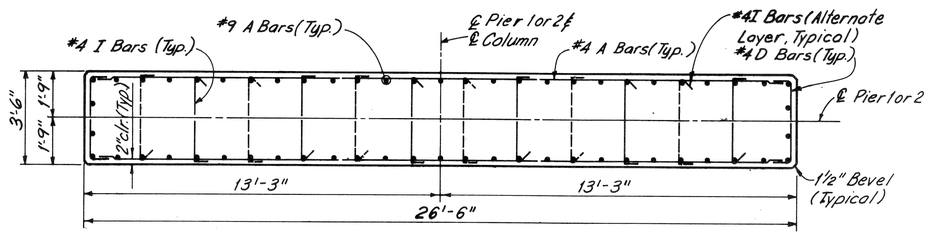

SECTION A-A
Scale: 3/8"=1'-0"

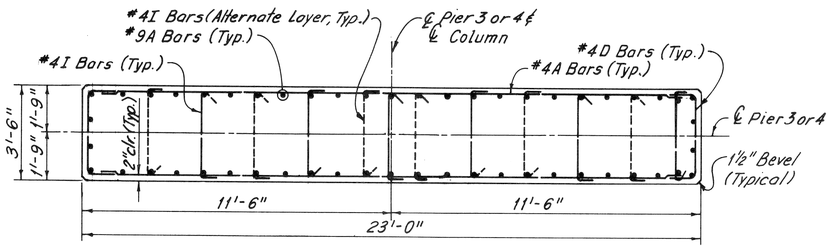

SECTION D-D

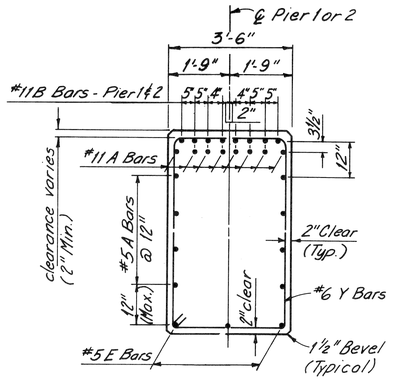

SECTION B-B
Scale: ½"=1'-0"

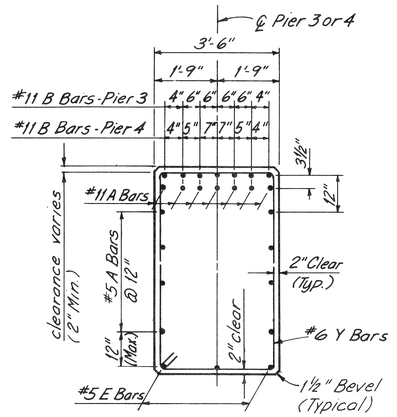

SECTION E-E
Scale: ½"=1'-0"

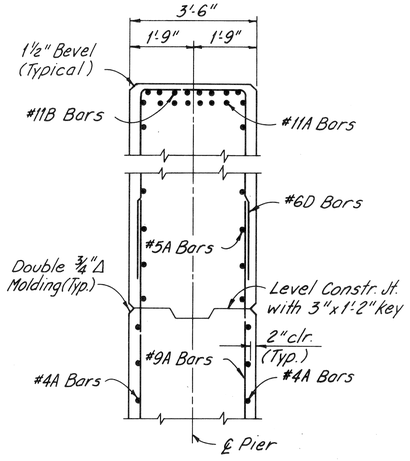

SECTION C-C
(Pier 1 ℄ 2 shown, Pier 3 ℄ 4 similar)
Scale: ½"=1'-0"

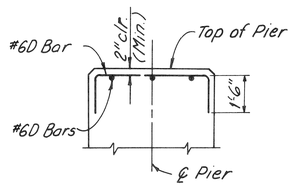

SECTION F-F
(Pier 1 ℄ 2 shown, Pier 3 ℄ 4 similar)
No Scale

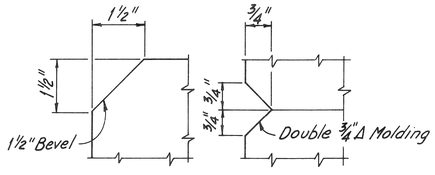

MISC. DETAILS
No Scale

NOTES:
FOR LOCATION OF SECTIONS A-A AND B-B SEE PIERS 1 AND 2, SHEETS 5-29 AND 5-30.

FOR LOCATION OF SECTION C-C, SEE PIERS 1 THRU 4, SHEETS 5-29 THRU 5-32.

FOR LOCATION OF SECTIONS D-D AND E-E SEE PIERS 3 AND 4, SHEETS 5-31 AND 5-32.

FOR LOCATION OF SECTION F SEE PIERS 1 THRU 4, SHEETS 5-29 THRU 5-32.

COOR'D	DESCRIPTION	DR'N	CK'D	AP'VD	DATE
REVISIONS LOCATED BY COORDINATES ON SHEET					

REFERENCE DRAWINGS

DESIGNED BY	R. Snow
DRAWN BY	N. Farah
TRACED BY	D. Ressler, J. Vargo
CHECKED BY	J. Vargo

CITY OF DETROIT
JEFFERSON/CONNER INDUSTRIAL REVITALIZATION PROJECT
— MACK AVENUE IMPROVEMENTS —

MADISON MADISON INTERNATIONAL OF MICHIGAN
in association with
HNTB HOWARD NEEDLES TAMMEN & BERGENDOFF

MACK AVENUE OVER CONRAIL

PIER DETAILS

SHEET 5-33 OF 117 SHEETS
JOB NO. 8627
SCALE: AS SHOWN
DATE SEPTEMBER 3, 1987

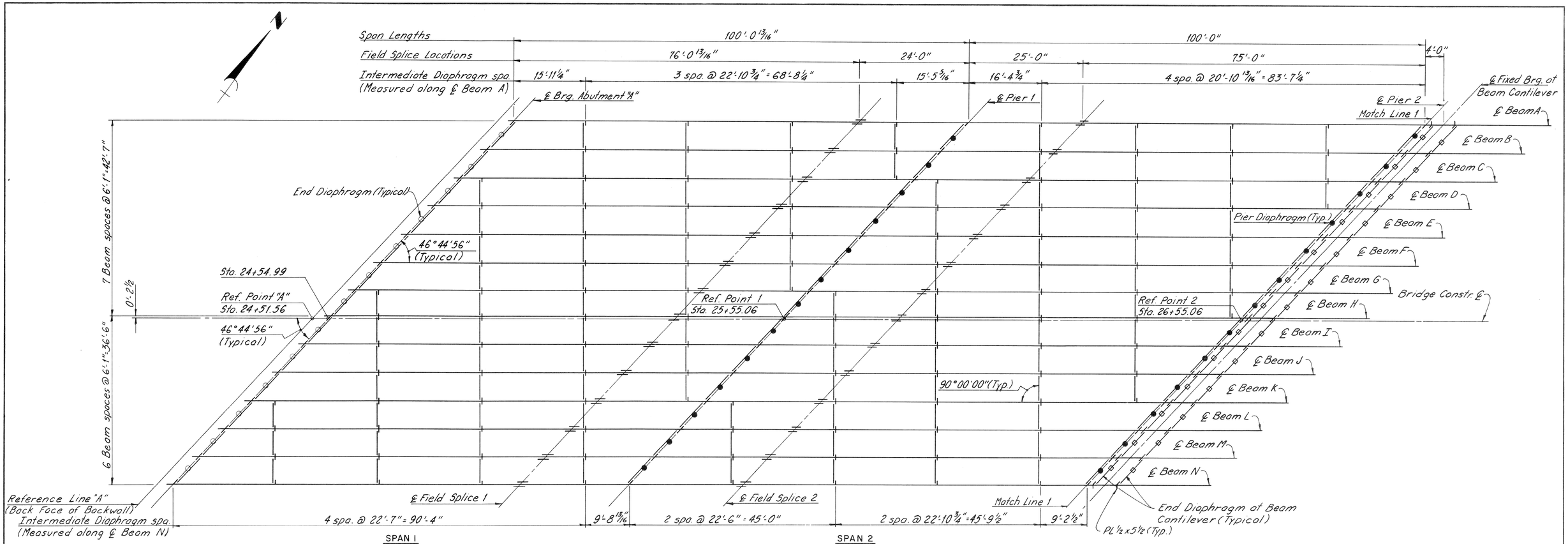

PART FRAMING PLAN
Scale : 1" = 10'

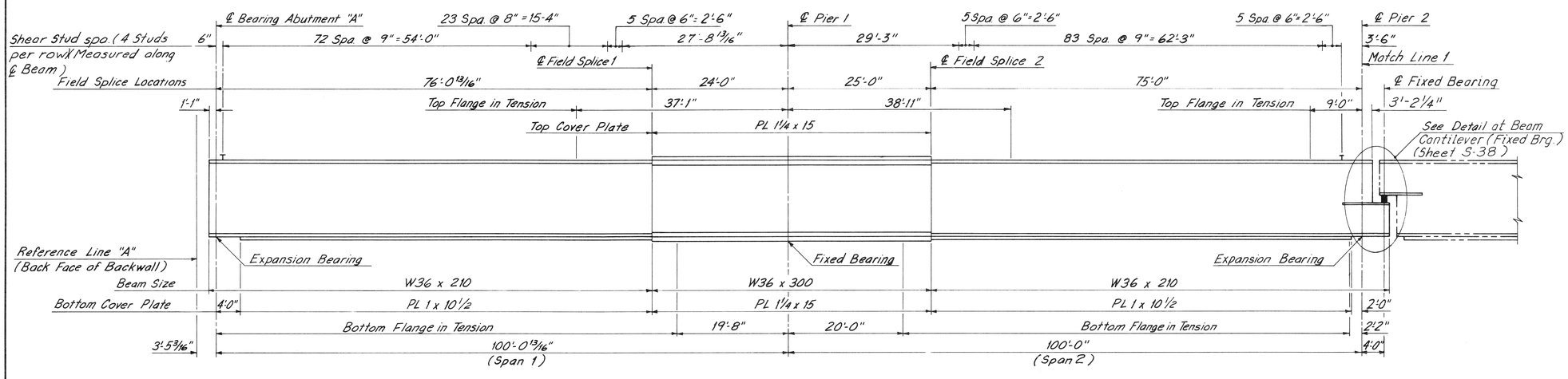

TYPICAL BEAM ELEVATION
No Scale

LEGEND
- INDICATES FIELD SPLICE
- INDICATES END DIAPHRAGM AT THE ABUTMENT
- INDICATES END DIAPHRAGM AT THE BEAM CANTILEVER
- INDICATES PIER DIAPHRAGM

FOR STRUCTURAL STEEL GENERAL NOTES, SEE SHEET 535.

COORD	DESCRIPTION	DR'N	CK'D	AP'VD	DATE
REVISIONS LOCATED BY COORDINATES ON SHEET					

REFERENCE DRAWINGS

DESIGNED BY	D. Sah
DRAWN BY	J. Vargo
TRACED BY	J. Vargo, P. Koszkalda
CHECKED BY	J. Thomas

CITY OF DETROIT
JEFFERSON/CONNER INDUSTRIAL REVITALIZATION PROJECT
— MACK AVENUE IMPROVEMENTS —

MADISON MADISON INTERNATIONAL OF MICHIGAN
in association with
HNTB HOWARD NEEDLES TAMMEN & BERGENDOFF

MACK AVENUE OVER CONRAIL
FRAMING PLAN AND BEAM ELEVATION

SHEET 534 OF 117 SHEETS
JOB NO. 8627
SCALE: AS SHOWN
DATE SEPTEMBER 3, 1987

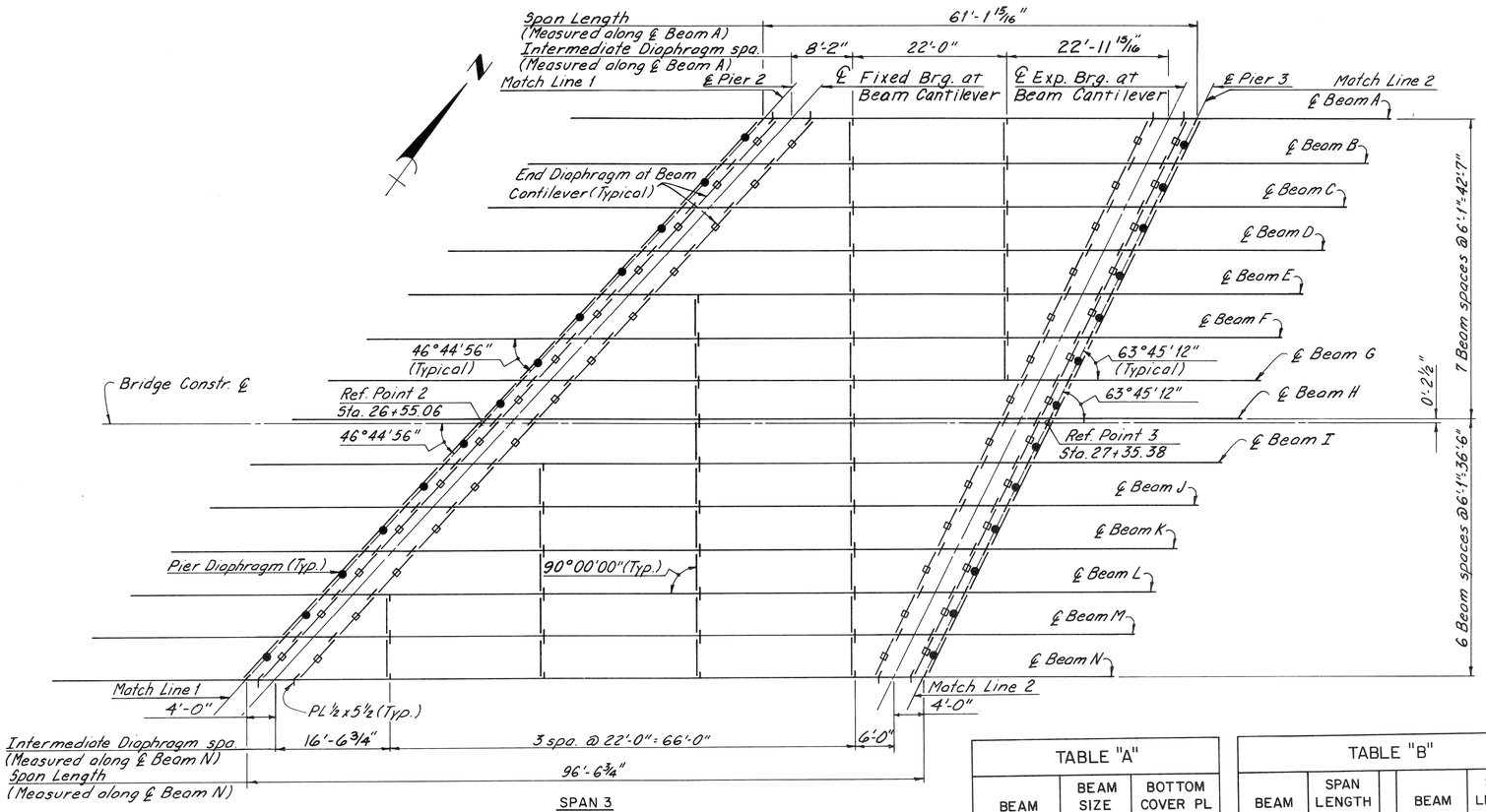

SPAN 3

PART FRAMING PLAN

Scale: 1" = 10'

TABLE "A"		
BEAM	BEAM SIZE	BOTTOM COVER PL
A, B and C	W36 x 135	PL ½ x 10½
D, E and F	W36 x 150	PL ¾ x 10½
G, H and I	W36 x 160	PL 1¼ x 10½
J and K	W36 x 210	PL 1⅛ x 10½
L, M and N	W36 x 230	PL 1⅛ x 15

TABLE "B"				
BEAM	SPAN LENGTH		BEAM	SPAN LENGTH
A	61'-1 15/16"		H	80'-2 11/16"
B	63'-10 5/16"		I	82'-11 3/16"
C	66'-7 5/16"		J	85'-8 1/16"
D	69'-3 15/16"		K	88'-4 3/4"
E	72'-0 5/8"		L	91'-1 3/8"
F	74'-9 5/16"		M	93'-10 1/16"
G	77'-6"		N	96'-6 3/4"

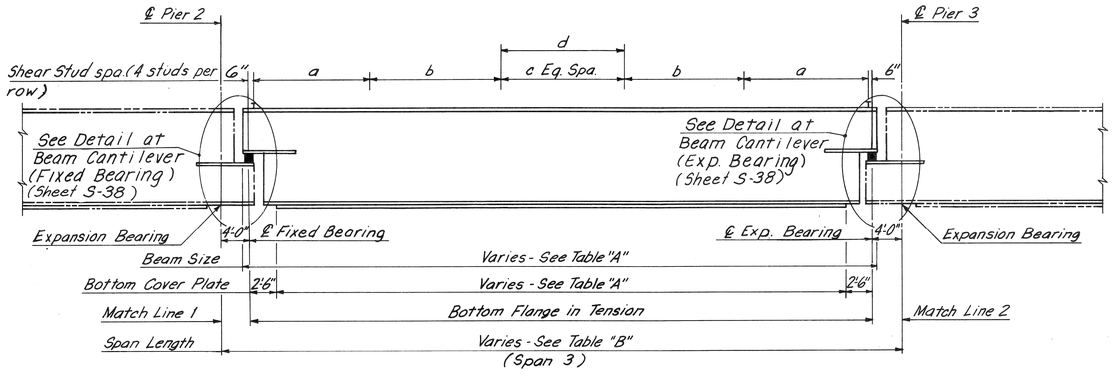

BEAM ELEVATION

No Scale

SHEAR STUD SPACING (SPAN 3)				
BEAM	a	b	c	d
A	15 Spa. @ 8" = 10'-0"	10 Spa. @ 12" = 10'-0"	9	12'-1 15/16"
B	16 Spa. @ 8" = 10'-8"	11 Spa. @ 12" = 11'-0"	8	11'-6 5/8"
C	17 Spa. @ 8" = 11'-4"	12 Spa. @ 12" = 12'-0"	8	10'-11 5/16"
D	18 Spa. @ 8" = 12'-0"	12 Spa. @ 12½" = 12'-6"	8	11'-3 15/16"
E	19 Spa. @ 8" = 12'-8"	12 Spa. @ 12½" = 12'-6"	9	12'-8 5/8"
F	19 Spa. @ 8" = 12'-8"	13 Spa. @ 12½" = 13'-6½"	9	13'-4 5/16"
G	18 Spa. @ 9" = 13'-6"	13 Spa. @ 13" = 14'-1"	9	13'-4"
H	19 Spa. @ 9" = 14'-3"	13 Spa. @ 13" = 14'-1"	10	14'-6 11/16"
I	20 Spa. @ 9" = 15'-0"	14 Spa. @ 13" = 15'-2"	9	13'-7 3/8"
J	20 Spa. @ 9" = 15'-0"	14 Spa. @ 13" = 15'-2"	11	16'-4 11/16"
K	21 Spa. @ 9" = 15'-9"	15 Spa. @ 13" = 16'-3"	10	15'-4 3/4"
L	20 Spa. @ 9½" = 15'-10"	15 Spa. @ 13½" = 16'-10½"	11	16'-8 3/8"
M	21 Spa. @ 9½" = 16'-7½"	15 Spa. @ 13½" = 16'-10½"	12	17'-10 1/16"
N	22 Spa. @ 9½" = 17'-5"	16 Spa. @ 13½" = 18'-0"	11	16'-8 3/4"

STRUCTURAL STEEL GENERAL NOTES

FIELD CONNECTIONS - SHALL BE BOLTED WITH 3/4-IN. DIAMETER HIGH STRENGTH BOLTS, EXCEPT AS NOTED. HIGH STRENGTH STEEL BOLTS, NUTS AND WASHERS SHALL, CONFORM TO ASTM A-325, TYPE 1, GALVANIZED.

CAMBER - THE BEAMS SHALL HAVE A PARABOLIC CAMBER WITH ORDINATES AS SHOWN ON THE CAMBER DIAGRAM. HEATING SHALL BE USED, IF NECESSARY, TO ASSURE CAMBER PERMANENCY WITHIN TOLERANCE OF ±1/4-IN. AT THE CENTER. THIS CAMBER SHALL BE MEASURED WITH THE BEAM LYING ON ITS SIDE.

PAINTING - ALL STRUCTURAL STEEL SHALL BE PAINTED IN ACCORDANCE WITH THE SPECIAL PROVISIONS.

STEEL - STRUCTURAL STEEL SHALL CONFORM TO ASTM A36.

FIELD SPLICES - CHANGES IN THE NUMBER AND LOCATION OF FIELD SPLICES SHOWN WILL BE PERMITTED, SUBJECT TO APPROVAL BY THE ENGINEER AND AT NO ADDITIONAL COST TO THE PROJECT. THE DESIGN OF THESE SPLICES WILL ALSO BE SUBJECT TO APPROVAL BY THE ENGINEER.

FABRICATION - SHALL BE IN ACCORDANCE WITH MICHIGAN DEPARTMENT OF STATE HIGHWAYS STANDARD SPECIFICATIONS FOR HIGHWAY CONSTRUCTION - 1984 EDITION.

SHOP ASSEMBLY - ALL MEMBERS WHETHER REAMED OR PUNCHED, SHALL BE ASSEMBLED AT THE FABRICATING PLANT, UNLESS OTHERWISE NOTED. ALL STEEL STRUCTURES HAVING REAMED FIELD CONNECTIONS SHALL BE ASSEMBLED, UNLESS OTHERWISE NOTED, BEFORE REAMING IS COMMENCED. ASSEMBLED STEEL STRUCTURES SHALL NOT BE KNOCKED DOWN UNTIL AFTER THE SHOP INSPECTION HAS BEEN MADE.

WELDING - THE MINIMUM SIZE OF WELD SHALL BE 1/4-IN, UNLESS OTHERWISE SHOWN ON THE PLANS. ALL WELDING SHALL BE DONE IN ACCORDANCE WITH A.W.S. SPECIFICATIONS.

THE WELDS AT THE ENDS OF DIAPHRAGM CONNECTION PLATES THAT ARE ATTACHED TO FLANGES SUBJECT TO TENSION SHALL BE 100 PERCENT MAGNETIC PARTICLE TESTED.

WELDING ON THE TENSION FLANGES OF BEAMS SHALL NOT BE PERMITTED UNLESS SUCH WELDING IS SHOWN ON THE PLANS OR SPECIFIED. WELDING AT OTHER LOCATIONS ON THE BEAMS, EXCEPT WHERE SHOWN ON THE PLANS, MAY BE PERMITTED BY WRITTEN AUTHORIZATION PROVIDING THE WELDING IS PERFORMED IN STRICT ACCORDANCE WITH ALL SPECIFICATION REQUIREMENTS FOR STRUCTURAL WELDING.

COOR'D	DESCRIPTION	DR'N	CK'D	AP'VD	DATE
REVISIONS LOCATED BY COORDINATES ON SHEET					

REFERENCE DRAWINGS

DESIGNED BY	D. Sah
DRAWN BY	J. Vargo
TRACED BY	J. Vargo, P. Koszkalda
CHECKED BY	J. Thomas

CITY OF DETROIT
JEFFERSON/CONNER INDUSTRIAL REVITALIZATION PROJECT
— MACK AVENUE IMPROVEMENTS —

MADISON MADISON INTERNATIONAL OF MICHIGAN
in association with
HNTB HOWARD NEEDLES TAMMEN & BERGENDOFF

MACK AVENUE OVER CONRAIL

FRAMING PLAN AND BEAM ELEVATION

SHEET 535 OF 117 SHEETS
JOB NO. 8627
SCALE: AS SHOWN
DATE SEPTEMBER 3, 1987

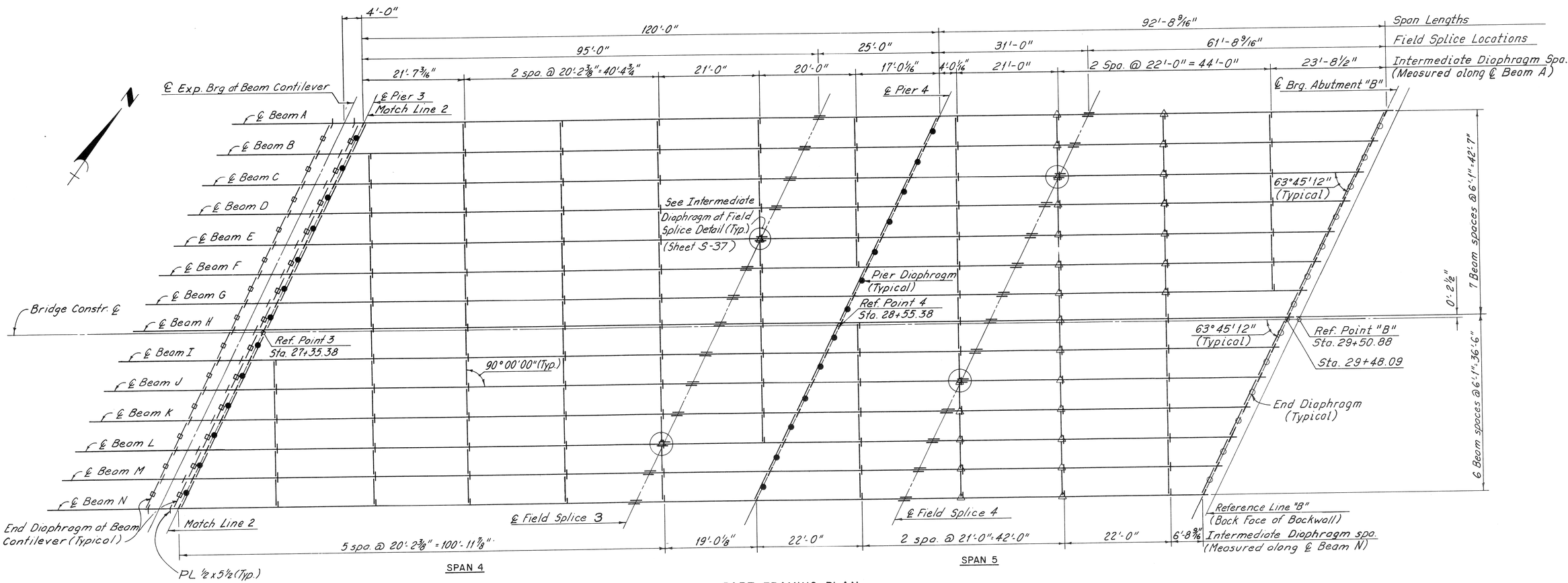

PART FRAMING PLAN
Scale: 1" = 10'

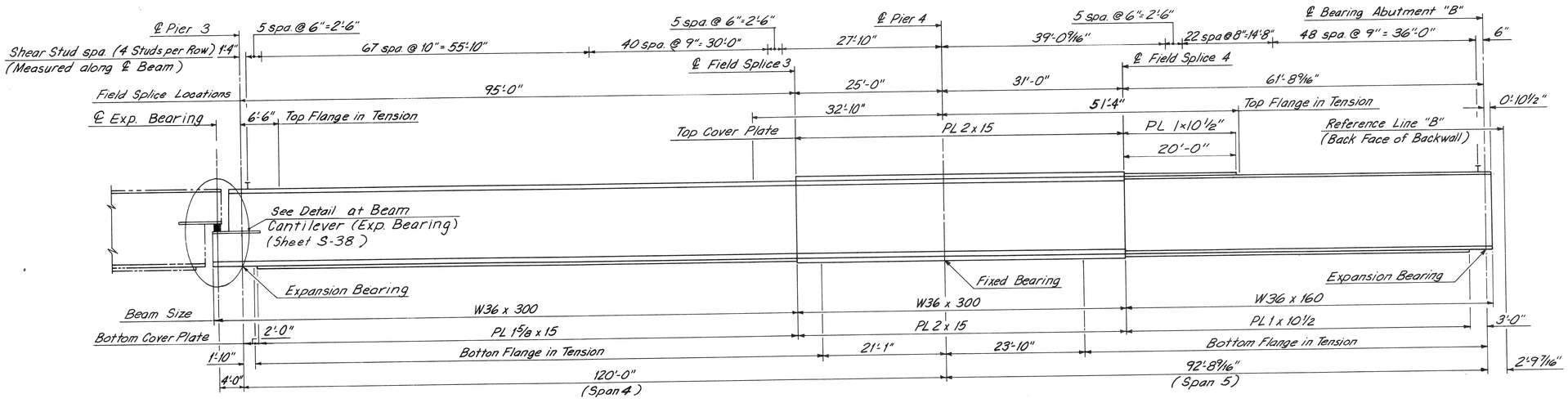

TYPICAL BEAM ELEVATION
No Scale

LEGEND
- INDICATES FIELD SPLICE
- INDICATES END DIAPHRAGM AT THE ABUTMENT
- INDICATES END DIAPHRAGM AT THE BEAM CANTILEVER
- INDICATES PIER DIAPHRAGM
- INDICATES INTERMEDIATE DIAPHRAGM WITH A BOLTED CONNECTION TO THE BEAM WEB. ALL OTHER INTERMEDIATE DIAPHRAGMS SHALL HAVE A WELDED CONNECTION TO THE BEAM WEB.

FOR STRUCTURAL STEEL GENERAL NOTES, SEE SHEET 535.

COOR'D	DESCRIPTION	DR'N	CK'D	AP'VD	DATE

REVISIONS LOCATED BY COORDINATES ON SHEET

REFERENCE DRAWINGS

DESIGNED BY	D. Sah
DRAWN BY	J. Vargo
TRACED BY	P. Koszkaldo, J. Vargo
CHECKED BY	J. Thomas

CITY OF DETROIT
JEFFERSON/CONNER INDUSTRIAL REVITALIZATION PROJECT
— MACK AVENUE IMPROVEMENTS —

MADISON MADISON INTERNATIONAL OF MICHIGAN
in association with
HNTB HOWARD NEEDLES TAMMEN & BERGENDOFF

MACK AVENUE OVER CONRAIL
FRAMING PLAN AND BEAM ELEVATION

SHEET 536 OF 117 SHEETS
JOB NO. 8627
SCALE: AS SHOWN
DATE SEPTEMBER 3, 1987

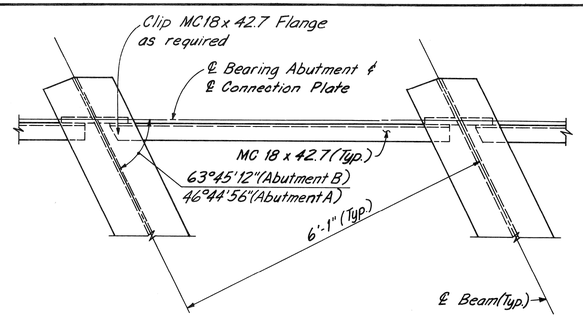

PLAN

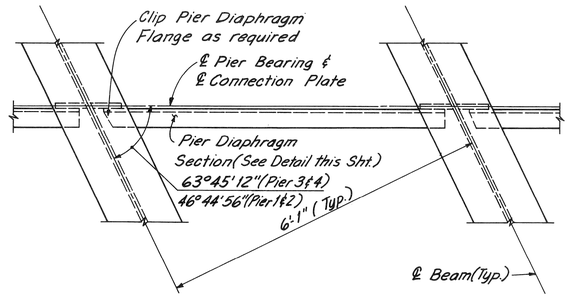

PLAN

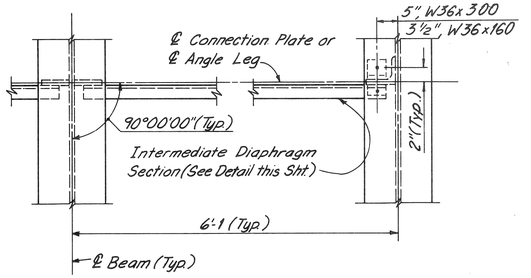

PLAN

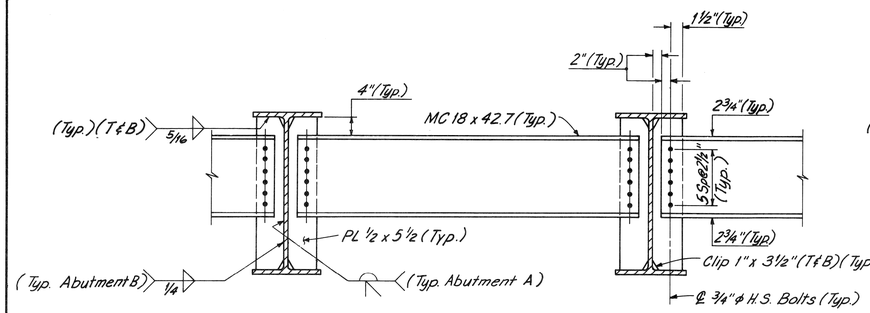

ELEVATION

END DIAPHRAGM AT ABUTMENTS

(End Diaphragm at Abutment B shown, End Diaphragm at Abutment A similar)

Scale: ¾"=1'-0"

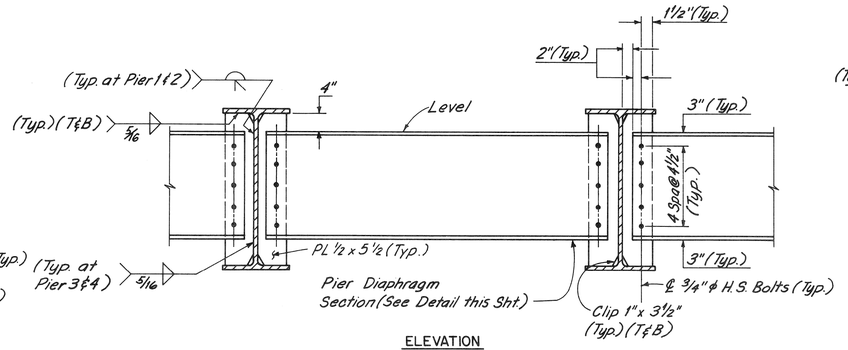

ELEVATION

PIER DIAPHRAGM

(Pier Diaphragm at Piers 3 and Pier 4 shown, Diaphragm at Piers 1 and 2 similar)

Scale: ¾"=1'-0"

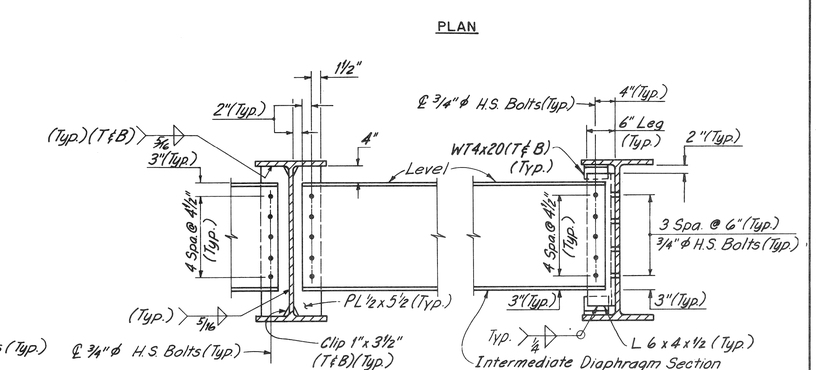

ELEVATION

INTERMEDIATE DIAPHRAGM

Scale: ¾"=1'-0"

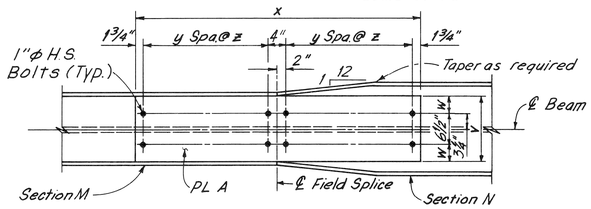

PLAN OF TOP FLANGE

(Bottom Flange Similar)

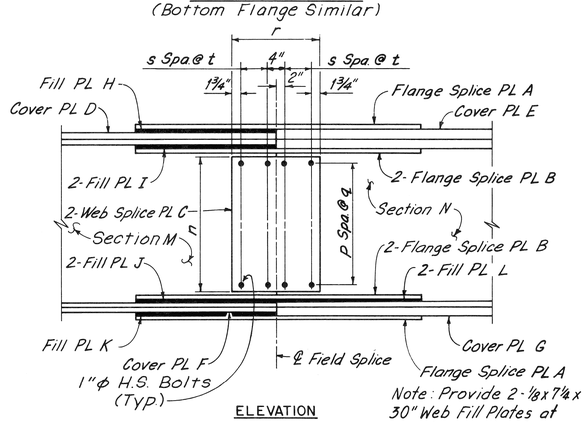

ELEVATION

FIELD SPLICE DETAILS

Scale: ¾"=1'-0"

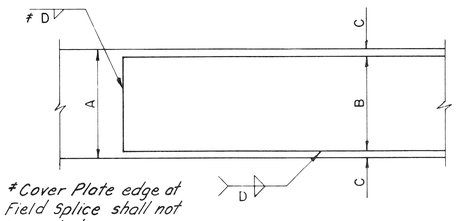

≠ Cover Plate edge at Field Splice shall not be welded.

COVER PLATE DETAILS

No Scale

COVER PLATE DIMENSIONS					
BEAM	A	B	C		D
W36 x 135	12"	10½"	¾"		1/4"
W36 x 150	12"	10½"	¾"		1/4"
W36 x 160	12"	10½"	¾"		5/16
W36 x 210	12⅛"	10½"	13/16"		5/16"
W36 x 230	16½"	15"	¾"		5/16"
W36 x 300	16⅜"	15"	13/16"		5/16"

FIELD SPLICE PLATES															
FIELD SPLICE	SPLICE PLATE			COVER PLATES				FILL PLATES				SECTION		
	A	B	C	D	E	F	G	H	I	J	K	L	M	N
1 & 2	5/16 x 10½	1⅛ x 4½	7/16 x 30	None	1¼ x 15	1 x 10½	1¼ x 15	1¼ x 10½	5/16 x 4½	5/16 x 4½	¼ x 10½	None	W36 x 210	W36 x 300
3	1 x 15	1 x 6½	7/16 x 30½	None	2 x 15	1⅝ x 15	2 x 15	None	2 x 15	None	⅜ x 15	None	W36 x 300	W36 x 300
4	1⅛ x 10½	1⅜ x 4½	7/16 x 30	1 x 10½	2 x 15	1 x 10½	2 x 15	1 x 10½	11/16 x 4½	None	1¾ x 10½	1/16 x 4½	W36 x 160	W30 x 300

FIELD SPLICE DIMENSIONS													
FIELD SPLICE	n	p	q	r	s	t	BOLTS PER WEB SPLICE	v	w	x	y	z	BOLTS PER FLANGE SPLICE
1 & 2	30"	7	3¾"	1'-2½"	1	3½"	32	10½"	2"	3'-6½"	5	3½"	24
3	30½"	9	3"	1'-9½"	2	3½"	60	15"	4¼"	5'-10½"	9	3½"	40
4	30"	7	3¾"	1'-2½"	1	3½"	32	10½"	2"	4'-8½"	7	3½"	32

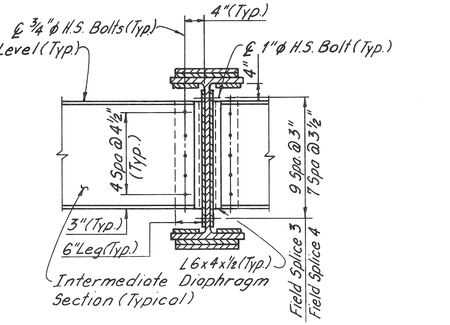

INTERMEDIATE DIAPHRAGM AT FIELD SPLICE

Scale: ¾"=1'-0"

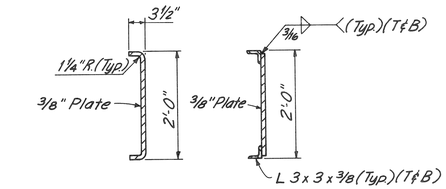

ALTERNATE

INTERMEDIATE AND PIER DIAPHRAGM SECTION

Scale: ¾"=1'-0"

FOR STRUCTURAL STEEL GENERAL NOTES, SEE SHEET 535.

FOR END DIAPHRAGM DETAILS AT BEAM CANTILEVER SEE SHEET 538.

COOR'D	DESCRIPTION	DR'N	CK'D	AP'VD	DATE
REVISIONS LOCATED BY COORDINATES ON SHEET					

REFERENCE DRAWINGS

DESIGNED BY	J. Wojtila
DRAWN BY	J. Wojtila
TRACED BY	P. Koszkalda
CHECKED BY	J. Vargo

CITY OF DETROIT

JEFFERSON/CONNER INDUSTRIAL REVITALIZATION PROJECT

— MACK AVENUE IMPROVEMENTS —

MADISON MADISON INTERNATIONAL OF MICHIGAN

in association with

HNTB HOWARD NEEDLES TAMMEN & BERGENDOFF

MACK AVENUE OVER CONRAIL

SUPERSTRUCTURE DETAILS

SHEET 537 OF 117 SHEETS

JOB NO. 8627

SCALE: AS SHOWN

DATE SEPTEMBER 3, 1987

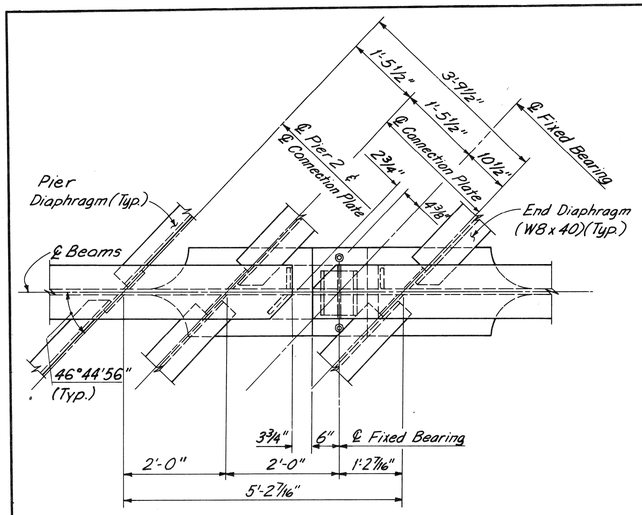

PLAN

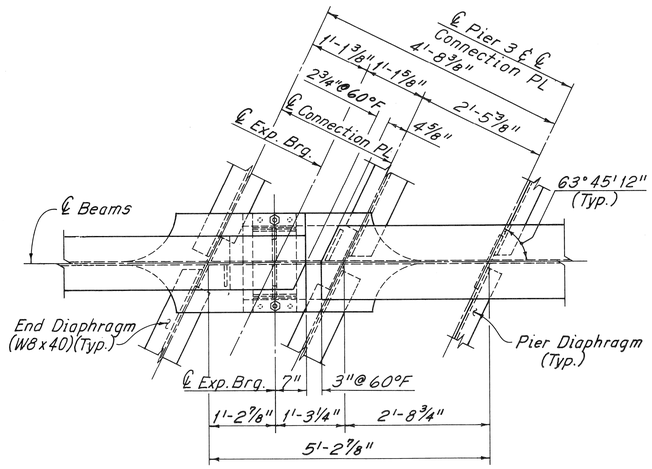

PLAN

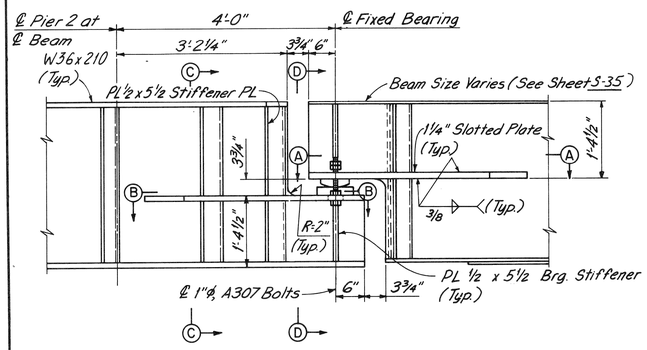

ELEVATION
(Pier and End Diaphragms not shown)

FIXED BEARING
Scale: ¾"=1'-0"

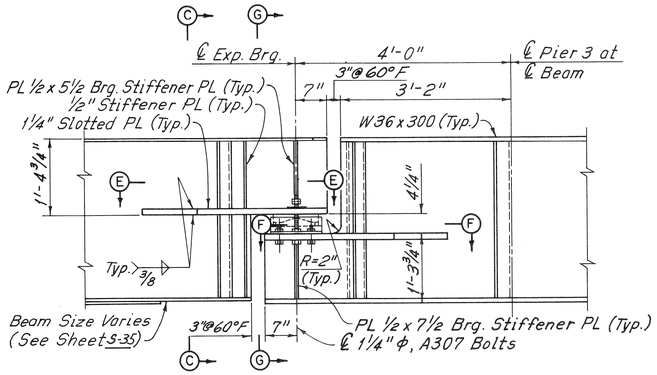

ELEVATION
(Pier and End Diaphragms not shown)

EXPANSION BEARING
Scale: ¾"=1'-0"

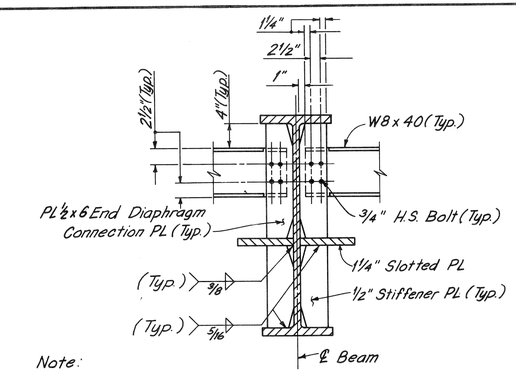

Note:
Section at Fixed Bearing shown, Section at Expansion Bearing similar.

SECTION C-C
Scale: 1"=1'-0"

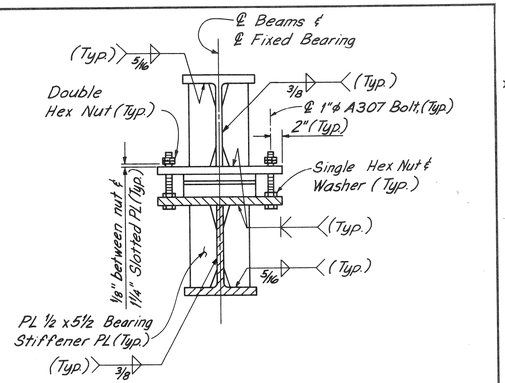

SECTION D-D
Scale: 1"=1'-0"

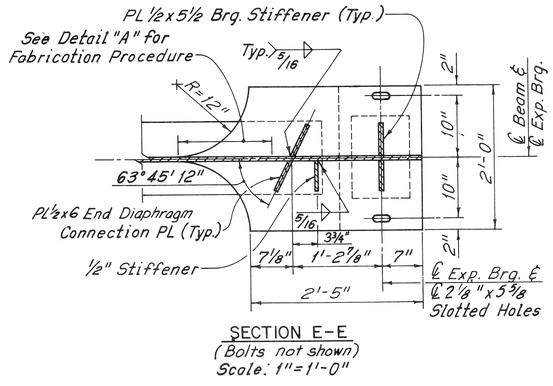

SECTION E-E
(Bolts not shown)
Scale: 1"=1'-0"

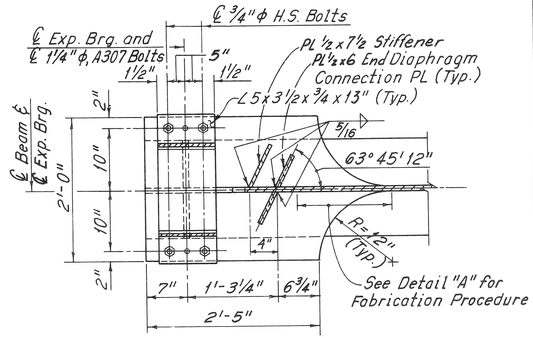

SECTION F-F
No Scale

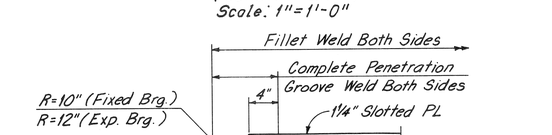

DETAIL "A"
No Scale

DETAIL A FABRICATION PROCEDURES

1. BEVEL THE PORTION OF THE SLOTTED PLATE THAT WILL BE GROOVE WELDED. A NOTCH WILL EXIST WHERE THE BEVEL IS STOPPED AT LOCATION A. THIS NOTCH SHALL BE GROUND OR GOUGED TO A SMOOTH ROUNDED CONTOUR TO AVOID WELD FLAWS AT THAT LOCATION.

2. CUT THE END OF THE SLOTTED PLATE TO THE PROPER RADIUS LEAVING ENOUGH MATERIAL TO PERMIT A SATISFACTORY GROOVE WELD WHERE THE CUT EDGE BECOMES TANGENT TO THE WEB.

3. MANUALLY GROOVE WELD THE END PORTION, STARTING AT THE END OF THE BEVEL AND MOVING TOWARD THE END OF THE SLOTTED PLATE. DO NOT USE A BACKUP BAR; INSTEAD, BACK GOUGE AS REQUIRED BY AWS SPECIFICATIONS.

4. ULTRASONICALLY TEST 100% OF THE GROOVE WELD.

5. PLACE SUBMERGED ARC FILLET WELDS ON BOTH SIDES OF THE SLOTTED PLATE FOR ITS ENTIRE LENGTH, INCLUDING THE END PORTIONS ALREADY GROOVE WELDED.

6. GRIND THE WELD AND SLOTTED PLATE MATERIAL TO A SMOOTH CONTOUR WHERE THE RADIUSED SLOTTED PLATE END BECOMES TANGENT TO THE WEB.

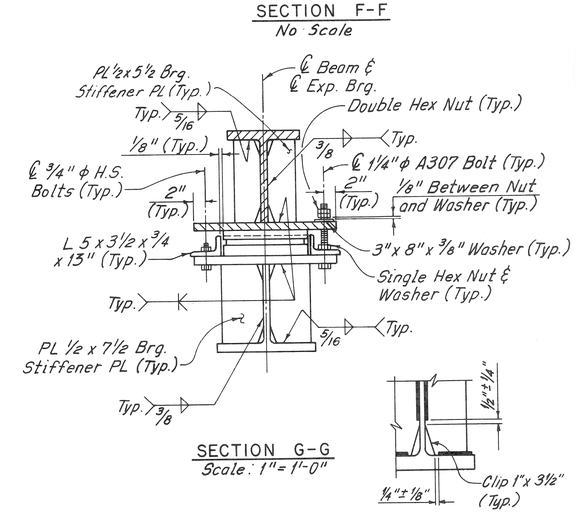

SECTION G-G
Scale: 1"=1'-0"

WELD LIMITS
No Scale

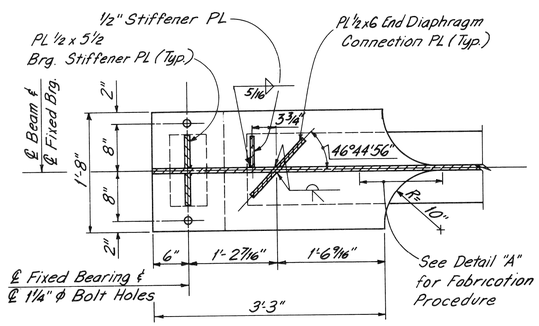

SECTION A-A
(Bolts not shown)
Scale: 1"=1'-0"

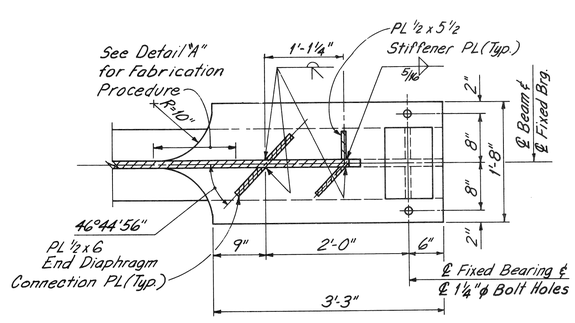

SECTION B-B
(Bolts not shown)
Scale: 1"=1'-0"

FOR STRUCTURAL STEEL GENERAL NOTES, SEE SHEET S35.

REFERENCE DRAWINGS	DESIGNED BY	D. Soh	
	DRAWN BY	J. Vorgo	
	TRACED BY	P. Koszkalda, D. Ressler	
	CHECKED BY	C. Cvitkovich	

COOR'D | DESCRIPTION | DR'N | CK'D | AP'VD | DATE

REVISIONS LOCATED BY COORDINATES ON SHEET

CITY OF DETROIT
JEFFERSON/CONNER INDUSTRIAL REVITALIZATION PROJECT
— MACK AVENUE IMPROVEMENTS —

MADISON MADISON INTERNATIONAL OF MICHIGAN
in association with
HNTB HOWARD NEEDLES TAMMEN & BERGENDOFF

MACK AVENUE OVER CONRAIL
DETAILS AT BEAM CANTILEVERS

SHEET S38 OF 117 SHEETS
JOB NO. 8627
SCALE: AS SHOWN
DATE SEPTEMBER 3, 1987

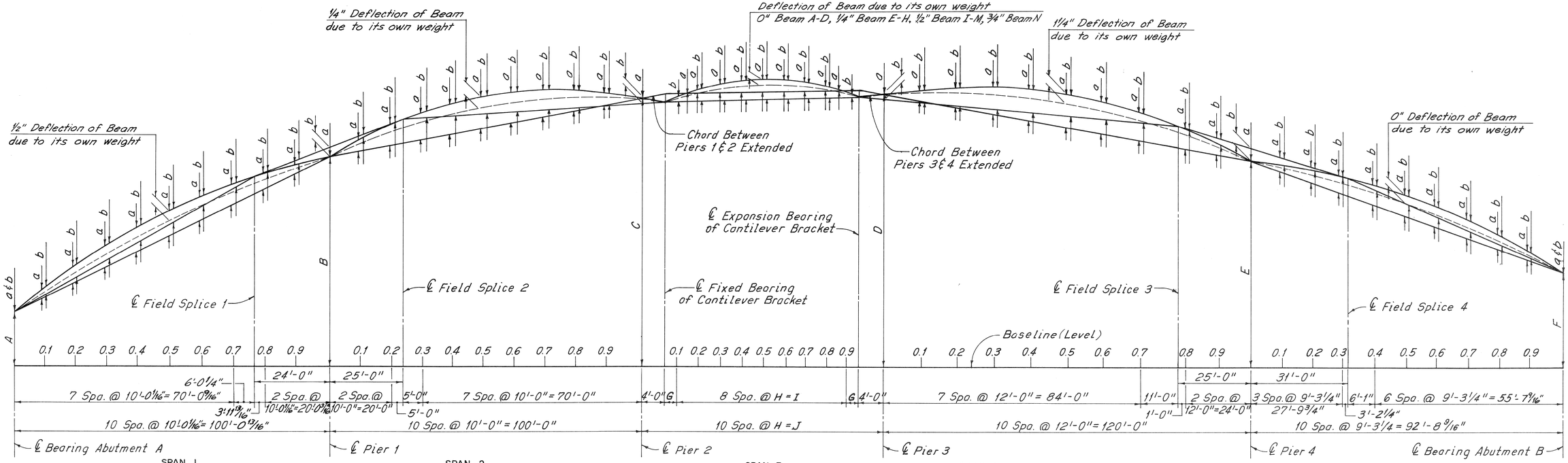

TYPICAL CAMBER DIAGRAM

No Scale

CAMBER DIAGRAM DIMENSIONS

	DIMENSION	A	B	C	D	E	F	G	H	I	J
BEAM	A	3'-2 5/16"	5'-2 1/16"	6'-0"	5'-10 9/16"	4'-2 1/16"	1'-8 13/16"	2'-1 3/8"	6'-1 3/8"	48'-11 1/8"	61'-1 15/16"
	B	3'-0 7/16"	5'-1 1/16"	5'-11 7/8"	5'-10 1/2"	4'-3 7/16"	1'-9 5/16"	2'-4 1/16"	6'-4 1/16"	51'-1 5/16"	63'-10 5/8"
	C	2'-11 1/8"	5'-1 1/4"	6'-0 5/16"	5'-11 5/16"	4'-4 3/16"	1'-11 1/16"	2'-7 15/16"	6'-7 15/16"	53'-3 7/16"	66'-7 5/16"
	D	2'-10 5/16"	5'-1 1/4"	6'-1 3/16"	6'-0 3/8"	4'-6 5/8"	2'-1 15/16"	2'-11 3/16"	6'-11 3/16"	55'-5 5/16"	69'-3 15/16"
	E	2'-9 7/16"	5'-1 3/16"	6'-2"	6'-1 7/8"	4'-8 7/16"	2'-4 3/16"	3'-2 7/16"	7'-2 7/16"	57'-7 1/16"	72'-0 5/8"
	F	2'-8 7/16"	5'-1 1/8"	6'-2 3/4"	6'-3 1/8"	4'-10 1/4"	2'-6 3/8"	3'-5 3/4"	7'-5 3/4"	59'-9 1/8"	74'-9 5/16"
	G	2'-7 7/16"	5'-1"	6'-3 7/16"	6'-4 3/8"	5'-0"	2'-8 9/16"	3'-9"	7'-9"	62'-0"	77'-6"
	H	2'-6 7/16"	5'-0 13/16"	6'-4 1/8"	6'-5 5/8"	5'-1 3/4"	2'-10 3/4"	4'-0 1/4"	8'-0 1/4"	64'-2 1/8"	80'-2 11/16"
	I	2'-3 3/16"	4'-10 7/16"	6'-2 5/8"	6'-4 11/16"	5'-1 7/16"	2'-10 13/16"	4'-3 3/16"	8'-3 3/16"	66'-4 9/16"	82'-11 3/8"
	J	1'-11 15/16"	4'-7 15/16"	6'-1"	6'-3 11/16"	5'-0 15/16"	2'-10 13/16"	4'-6 13/16"	8'-6 13/16"	68'-6 1/16"	85'-8 1/16"
	K	1'-8 5/8"	4'-5 7/16"	5'-11 3/8"	6'-2 1/16"	5'-0 1/2"	2'-10 3/4"	4'-10 1/16"	8'-10 1/16"	70'-8 5/8"	88'-4 3/4"
	L	1'-5 5/16"	4'-2 7/8"	5'-9 5/8"	6'-1 1/16"	5'-0"	2'-10 1/16"	5'-1 5/16"	9'-1 5/16"	72'-10 3/4"	91'-1 3/8"
	M	1'-2 1/16"	4'-0 1/4"	5'-7 7/8"	6'-0 5/8"	4'-11 9/16"	2'-10 5/8"	5'-4 5/8"	9'-4 5/8"	75'-0 7/8"	93'-10 11/16"
	N	1'-0 1/4"	3'-11 1/16"	3'-7 3/16"	6'-1 1/8"	5'-0 9/16"	3'-0"	5'-7 7/8"	9'-7 7/8"	77'-3"	96'-6 3/4"

CAMBER TABLE - SPAN 1 (INCHES)

BEAM	ABUT A		0.1		0.2		0.3		0.4		0.5		0.6		0.7		0.8		0.9		PIER 1	
	a	b	a	b	a	b	a	b	a	b	a	b	a	b	a	b	a	b	a	b	a	b
A–B	0	0	1½	1¼	2½	2	3½	2½	3¾	2¾	3¾	2¼	3¼	1¾	2¾	¾	1¾	0	1	¼	0	¼
C–I	0	0	1½	1	2½	2	3¼	2½	3¾	2½	3¾	2¼	3¼	1½	2½	¾	1¾	0	1	¼	0	¼
J–K	0	0	1¼	1	2½	2	3¼	2½	3½	2½	3½	2¼	3¼	1½	2½	¾	1¾	0	1	¼	0	¼
L	0	0	1¼	1	2¼	1¾	3¼	2¼	3½	2½	3½	2¾	3¼	1½	2½	¾	1¾	0	1	¼	0	¼
M–N	0	0	¼	¾	2¼	1½	3	2	3½	2¼	3½	2	3¼	1½	2½	½	1¾	0	1	¼	0	¼

CAMBER TABLE - SPAN 2 (INCHES)

BEAM	PIER 1		0.1		0.2		0.3		0.4		0.5		0.6		0.7		0.8		0.9		PIER 2	
	a	b	a	b	a	b	a	b	a	b	a	b	a	b	a	b	a	b	a	b	a	b
A–B	0	¼	¾	¼	1¾	0	2½	½	3	1½	3½	2	3½	2½	3¼	2½	2½	2	1¼	1¼	0	0
C	0	¼	¾	¼	1¾	0	2½	½	3	1½	3½	2	3½	2¼	3	2¼	2¼	1¾	1¼	1	0	0
D–F	0	¼	¾	¼	1¾	0	2½	½	3	1½	3¼	2	3¼	2¼	3	2¼	2¼	1¾	1¼	1	0	0
G–H	0	¼	¾	¼	1½	0	2½	½	3	1½	3¼	2	3¼	2¼	3	2¼	2¼	1¾	1¼	1	0	0
I–N	0	¼	¾	¼	1½	0	2¼	½	3	1½	3¼	2	3¼	2¼	3	2¼	2¼	1¾	1¼	1	0	0

CAMBER TABLE - SPAN 3 (INCHES)

BEAM	PIER 2		0.1		0.2		0.3		0.4		0.5		0.6		0.7		0.8		0.9		PIER 3	
	a	b	a	b	a	b	a	b	a	b	a	b	a	b	a	b	a	b	a	b	a	b
A	0	0	0	0	¼	½	½	¾	¾	1	¾	1	¾	1	¼	¾	0	½	0	0	0	¼
B	0	0	0	¼	½	¾	¾	1	1	1¼	1	1¼	1	1¼	½	1	0	½	0	0	0	¼
C	0	0	0	¼	½	¾	1	1¼	1¼	1½	1¼	1½	1	1¼	½	1	¼	¾	0	0	0	¼
D	0	0	0	¼	¾	1	1	1¼	1½	1¾	1½	1¾	1¼	1½	¾	1¼	¼	¾	0	0	0	¼
E	0	0	0	¼	¾	1	1¼	1½	1½	1¾	1¾	2	1½	1¾	1	1½	½	1	0	¼	0	¼
F	0	0	¼	½	1	1¼	1½	1¾	1¾	2	2	2¼	1¾	2	1¼	1¾	½	1	0	¼	0	¼
G	0	0	¼	½	1	1¼	1¾	2	2	2¼	2¼	2½	2	2¼	1¼	1¾	¾	1¼	0	¼	0	¼
H	0	0	¼	½	1¼	1½	1¾	2	2¼	2½	2½	2¾	2¼	2½	1½	2	¾	1¼	0	¼	0	¼
I	0	0	¼	½	1¼	1½	2	2¼	2½	2¾	2¾	3	2½	2¾	1¾	2¼	1	1½	0	½	0	¼
J	0	0	½	¾	1½	1¾	2¼	2½	2¾	3	3	3¼	2¾	3	2	2½	1	1½	0	½	0	¼
K	0	0	½	¾	1½	1¾	2½	2¾	3	3¼	3¼	3½	3	3¼	2	2½	1¼	1¾	0	½	0	¼
L	0	0	½	¾	1¾	2	2¾	3	3¼	3½	3½	3¾	3¼	3½	2¼	2¾	1½	2	¼	¾	0	¼
M	0	0	¾	1	2	2¼	2¾	3	3½	3¾	3¾	4	3½	3¾	2½	3	1½	2	¼	¾	0	¼
N	0	0	¾	1	2	2¼	3¼	3½	3¾	4	4	4¼	3¾	4	2¾	3¼	1¾	2¼	¼	¾	0	¼

CAMBER TABLE - SPAN 4 (INCHES)

BEAM	PIER 3		0.1		0.2		0.3		0.4		0.5		0.6		0.7		0.8		0.9		PIER 4	
	a	b	a	b	a	b	a	b	a	b	a	b	a	b	a	b	a	b	a	b	a	b
A–B	0	¼	2¼	2	4	3½	5½	4½	6¼	4¾	6¼	4¼	5¾	3¼	4½	1¾	3¼	0	1½	¼	0	¼
C	0	¼	2¼	2	4	3½	5¼	4¼	6	4½	6	4¼	5½	3¼	4½	1¾	3	0	1½	¼	0	¼
D–H	0	¼	2¼	2	4	3¼	5¼	4¼	6	4½	6	4	5½	3¼	4½	1¾	3	0	1½	¼	0	¼
I–K	0	¼	2¼	2	4	3¼	5¼	4¼	6	4½	6	4	5½	3	4½	1¾	3	0	1½	¼	0	¼
L	0	¼	2	2	4	3¼	5¼	4¼	5¾	4¼	6	4	5½	3	4½	1¾	3	0	1½	¼	0	¼
M–N	0	¼	2	2	4	3¼	5¼	4	5¾	4¼	6	4	5½	3	4½	1¾	3	0	1½	¼	0	¼

CAMBER TABLE - SPAN 5 (INCHES)

BEAM	PIER 4		0.1		0.2		0.3		0.4		0.5		0.6		0.7		0.8		0.9		ABUT B	
	a	b	a	b	a	b	a	b	a	b	a	b	a	b	a	b	a	b	a	b	a	b
A–B	0	¼	½	¼	1	0	1½	0	1¾	½	2¼	1	2¼	1¼	2	1½	1¾	1¼	1	¾	0	0
C–N	0	¼	½	¼	1	0	1½	0	1¾	½	2¼	1	2¼	1¼	2	1¼	1¾	1¼	1	¾	0	0

REVISIONS LOCATED BY COORDINATES ON SHEET							REFERENCE DRAWINGS
COOR'D	DESCRIPTION	DR'N	CK'D	AP'VD	DATE		

DESIGNED BY	D. Soh
DRAWN BY	J. Wojtila
TRACED BY	D. Ressler
CHECKED BY	J. Vargo, C. Cvitkovich

CITY OF DETROIT
JEFFERSON/CONNER INDUSTRIAL REVITALIZATION PROJECT
— MACK AVENUE IMPROVEMENTS —

MADISON MADISON INTERNATIONAL OF MICHIGAN
in association with
HNTB
HOWARD NEEDLES TAMMEN & BERGENDOFF

MACK AVENUE OVER CONRAIL

CAMBER DIAGRAM

SHEET 939 OF 117 SHEETS
JOB NO. 8627
SCALE: NONE
DATE SEPTEMBER 3, 1987

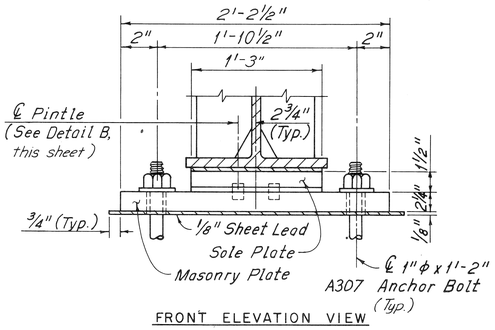

FRONT ELEVATION VIEW

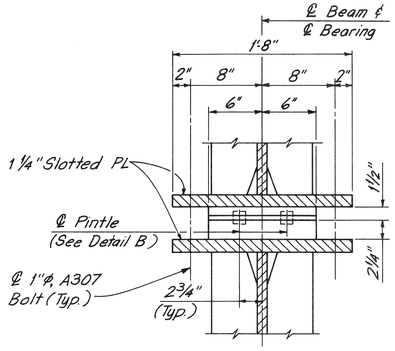

FRONT ELEVATION VIEW
(1"ϕ, A307 Bolts, not shown)

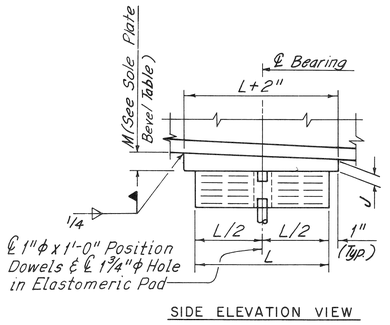

SIDE ELEVATION VIEW

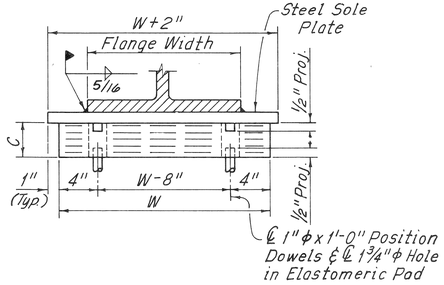

FRONT ELEVATION VIEW

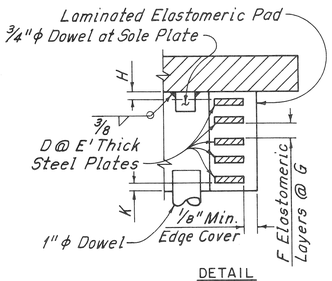

DETAIL

LAMINATED ELASTOMERIC EXPANSION BEARING AT ABUTMENTS AND PIERS 2 AND 3

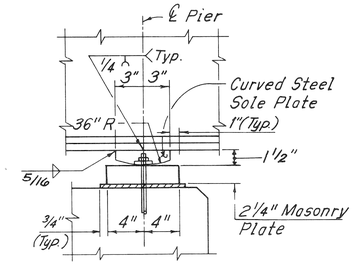

SIDE ELEVATION VIEW

FIXED BEARING AT PIERS 1 AND 4

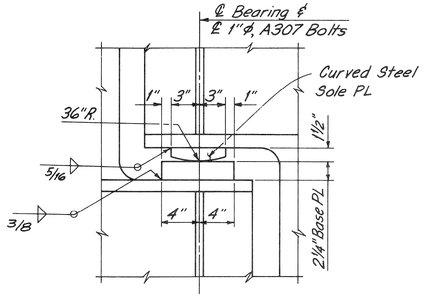

SIDE ELEVATION VIEW
(1"ϕ, A307 Bolts, not shown)

FIXED BEARING AT BEAM CANTILEVER

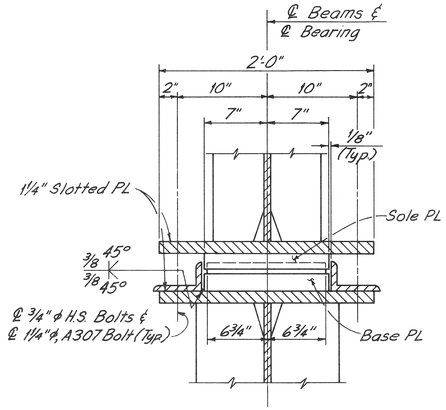

FRONT ELEVATION VIEW
(1¼"ϕ, A307 Bolts and ¾"ϕ, H.S. Bolts not shown)

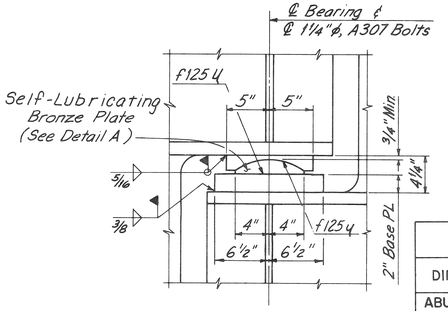

SIDE ELEVATION VIEW
(Angle and 1¼"ϕ, A307 Bolts not shown)

SOLE PLATE BEVEL							
	DIMENSION M						
BEAM	A	B & C	D-G	H	I-K	L & M	N
ABUTMENT A	1¼"	1¼"	1¼"	1¼"	1 5/16"	1 5/16"	1 5/16"
PIER 2	1"	1 1/16"	1 1/16"	1 1/8"	1 1/8"	1 1/8"	1 3/16"
PIER 3	1 1/16"	1 1/16"	1 1/16"	1 1/16"	1 1/16"	1"	1"
ABUTMENT B	1 5/16"	1 5/16"	1¼"	1¼"	1¼"	1¼"	1¼"

EXPANSION BEARING DIMENSIONS										
DIMENSION	W	L	D	E	F	G	H	C	J	K
ABUTMENTS A & B	18"	7"	8	3/32"	7	5/16"	5/16"	3½"	1"	¼"
PIER 2	18"	13"	4	⅛"	3	½"	½"	3"	1"	½"
PIER 3	23"	12"	5	⅛"	4	½"	½"	3½"	1"	⅜"

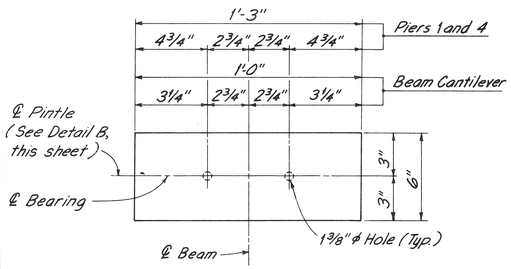

SOLE PLATE DETAIL

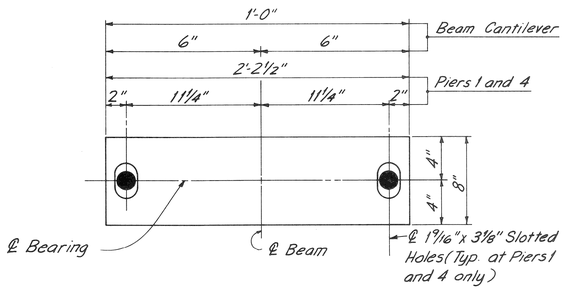

MASONRY PLATE AND BASE PLATE DETAIL

EXPANSION BEARING AT BEAM CANTILEVER

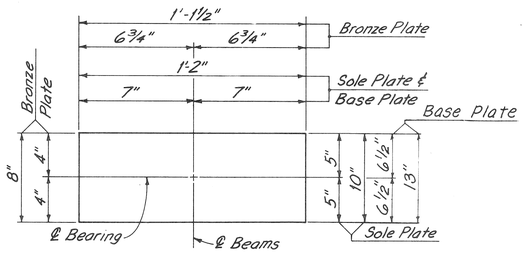

BRONZE, SOLE AND BASE PLATE DETAIL

NOTES:
ALL STEEL SHALL BE ASTM A-36.

ALL ITEMS SHALL BE THE STANDARD PRODUCTS OF THE MANUFACTURER OF SUCH MATERIALS FOR THIS APPLICATION.

ELASTOMER FOR ELASTOMERIC BEARING PADS SHALL BE NOMINAL 50 DUROMETER HARDNESS FOR EXPANSION BEARINGS. THE DESIGN OF THESE PADS IS BASED ON A MAXIMUM PRESSURE OF 500 PSI D.L AND 800 PSI D.L & L.L.

BEARINGS SHALL BE SHOP ASSEMBLED AND MATCH MARKED TO INSURE PROPER FIT.

ALL ANCHOR BOLTS SHALL BE GALVANIZED.

SURFACES OF SOLE PLATE AND BASE PLATE IN CONTACT WITH BRONZE PLATE TO HAVE MACHINE FINISH OF AT LEAST 125 μ INCH, MEASURED IN ACCORDANCE WITH ANSI B46.1. THESE STEEL SURFACES SHALL NOT BE PAINTED, BUT BE COATED WITH A MULTIPURPOSE GREASE BEFORE SHIPMENT. THE BEARING ELEMENTS SHALL BE DELIVERED AND STORED AT THE SITE IN ASSEMBLED CONDITION.

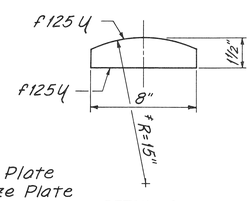

DETAIL A

ǂ Radius Tolerances:
R = 15" -0" +0.01" Sole Plate
R = 15" -0.01" +0" Bronze Plate

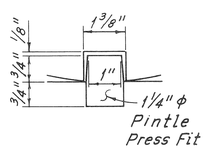

DETAIL B

REVISIONS LOCATED BY COORDINATES ON SHEET

COORD	DESCRIPTION	DR'N	CK'D	AP'VD	DATE

REFERENCE DRAWINGS

DESIGNED BY	J. Wojtila
DRAWN BY	J. Wojtila
TRACED BY	P. Koszkalda D. Ressler
CHECKED BY	R. Snow J. Vargo

CITY OF DETROIT
JEFFERSON/CONNER INDUSTRIAL REVITALIZATION PROJECT
— MACK AVENUE IMPROVEMENTS —

MADISON MADISON INTERNATIONAL OF MICHIGAN
in association with
HNTB HOWARD NEEDLES TAMMEN & BERGENDOFF

MACK AVENUE OVER CONRAIL

BEARING DETAILS

SHEET 340 OF 117 SHEETS
JOB NO. 8627
SCALE: NO SCALE
DATE SEPTEMBER 3, 1987

DETAIL A
Scale: 3/8" = 1'-0"
(Slab Reinforcement not shown)

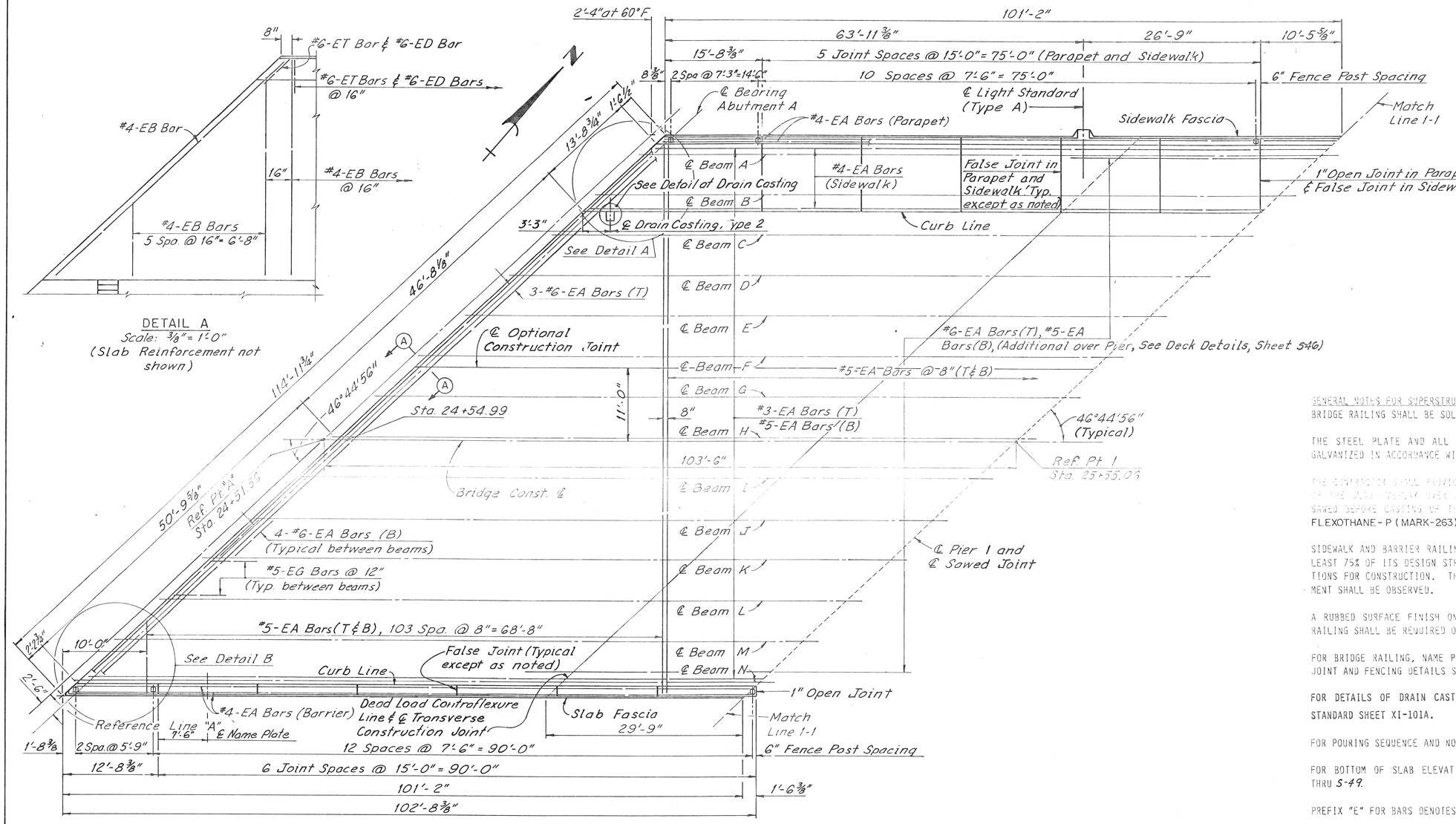

SLAB PLAN – SPAN I
Scale: 1/8" = 1'-0"

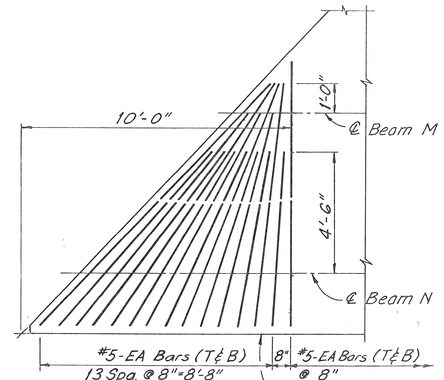

DETAIL B
Scale: 3/8" = 1'-0"
(Barrier not shown)

GENERAL NOTES FOR SUPERSTRUCTURE

BRIDGE RAILING SHALL BE SOLID PARAPET TYPE AND BARRIER RAILING, TYPE 4.

THE STEEL PLATE AND ALL MOUNTING HARDWARE LOCATED AT THE LIGHT STANDARDS SHALL BE GALVANIZED IN ACCORDANCE WITH ASTM DESIGNATION A153.

THE CONTRACTOR SHALL PROVIDE A SAWED JOINT 1/8-IN. DEEP BY 1/4-IN. WIDE (MIN.) IN THE TOP OF THE SLAB (DISPLACEMENT OF PLANS). THE JOINT SHALL BE SAWED BEFORE CASTING OF THE SIDEWALK AND BARRIER RAILING AND IS TO BE FILLED WITH FLEXOTHANE-P (MARK-263) AS MANUFACTURED BY POLY-CARB INC. OF CLEVELAND, OHIO.

SIDEWALK AND BARRIER RAILING POURS SHALL NOT BE CAST UNTIL SLAB CONCRETE HAS ATTAINED AT LEAST 75% OF ITS DESIGN STRENGTH AS DETERMINED BY TABLE 7.01-4 OF THE STANDARD SPECIFICATIONS FOR CONSTRUCTION. THE RESTRICTIONS OF SUBSECTION 5.03.10(A) REGARDING HEAVY EQUIPMENT SHALL BE OBSERVED.

A RUBBED SURFACE FINISH ON THE VERTICAL AND TOP CONCRETE SURFACES OF THE SOLID PARAPET RAILING SHALL BE REQUIRED ON THIS STRUCTURE.

FOR BRIDGE RAILING, NAME PLATE MOUNTING, LIGHT STANDARD, MOLDING AND BEVEL, CONSTRUCTION JOINT AND FENCING DETAILS SEE DECK DETAILS, SHEET S-45 AND SHEET S-46.

FOR DETAILS OF DRAIN CASTINGS, DOWNSPOUTS AND ATTACHMENT OF DOWNSPOUTS TO PIERS, SEE STANDARD SHEET XI-101A.

FOR POURING SEQUENCE AND NOTES SEE SCREED ELEVATIONS, SHEET S-47.

FOR BOTTOM OF SLAB ELEVATION AND SCREED ELEVATION NOTES SEE SCREED ELEVATIONS, SHEETS S-47 THRU S-49.

PREFIX "E" FOR BARS DENOTES THAT BAR SHALL BE EPOXY COATED.

SCUPPER DISCHARGE SHALL BE CARRIED IN CLOSED PIPING DOWN PIERS 1, 2, 3 AND 4 AND CONNECTED TO THE UNDERGROUND SEWER SYSTEM. SCUPPER AND PIPING DETAILS SHALL BE IN ACCORDANCE WITH STANDARD DRAWING XI-101A.

BAR LAPS	
SIZE	LAP
#3	1'-0"
#4	1'-4"
#5	1'-8"
#6	2'-1"

NOTES:

FOR TYPICAL CROSS SECTION, SEE DECK DETAILS, SHEET S-45.

FOR SECTION A-A, SEE DECK DETAILS, SHEET S-46.

FOR DETAIL AT DRAIN CASTING, SEE DECK DETAILS, SHEET S-46.

COOR'D	DESCRIPTION	DR'N	CK'D	AP'VD	DATE

REVISIONS LOCATED BY COORDINATES ON SHEET

REFERENCE DRAWINGS

DESIGNED BY	D. Sah
DRAWN BY	J. Thomas
TRACED BY	J. Thomas
CHECKED BY	J. Vargo

CITY OF DETROIT
JEFFERSON/CONNER INDUSTRIAL REVITALIZATION PROJECT
— MACK AVENUE IMPROVEMENTS —

MADISON MADISON INTERNATIONAL OF MICHIGAN
in association with
HNTB HOWARD NEEDLES TAMMEN & BERGENDOFF

MACK AVENUE OVER CONRAIL

DECK SLAB – SPAN I

SHEET 541 OF 117 SHEETS
JOB NO. 8627
SCALE: AS SHOWN
DATE SEPTEMBER 3, 1987

DETAIL C
Scale: 3/8"=1'-0"

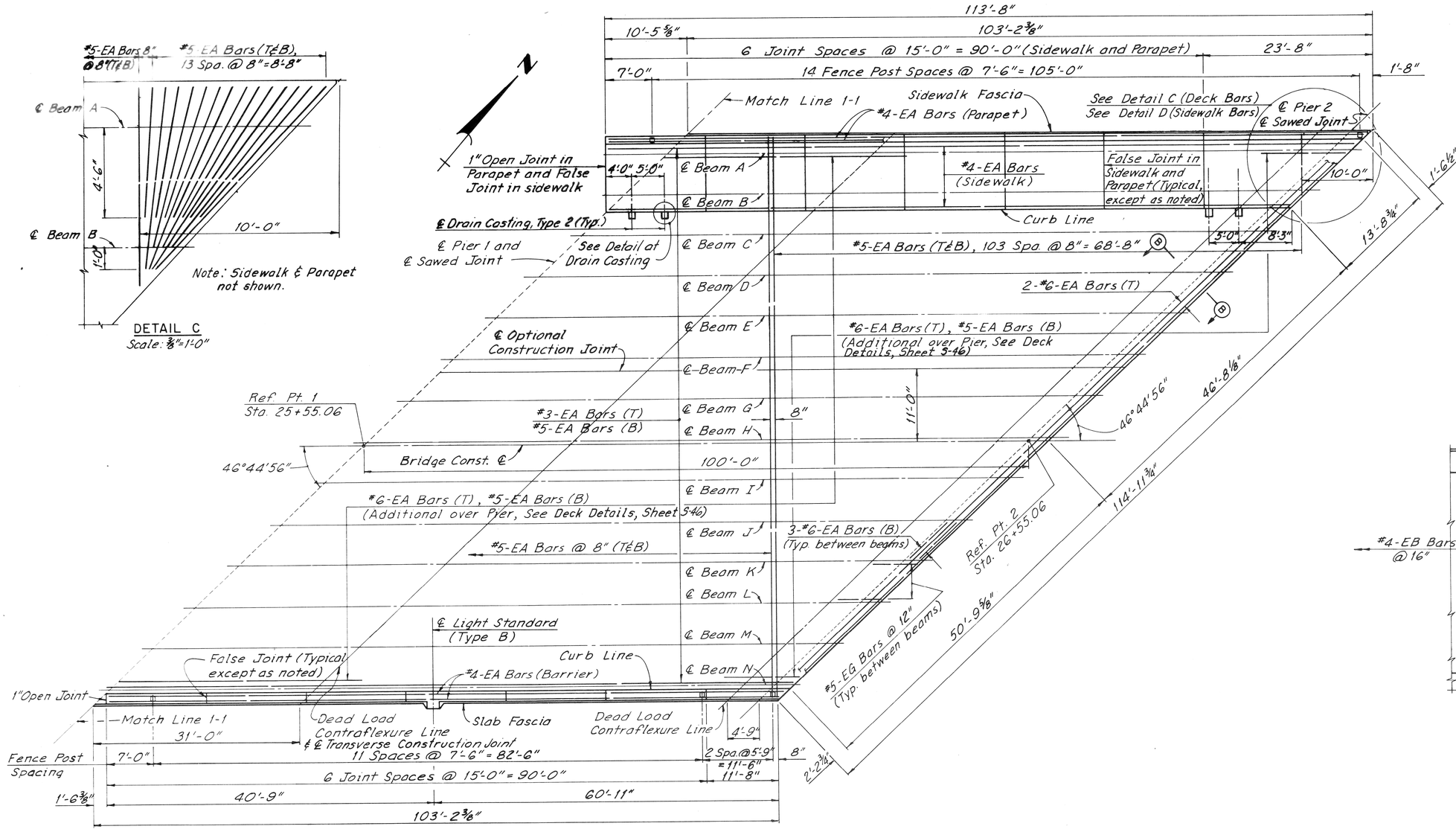

SLAB PLAN - SPAN 2
Scale 1/8"=1'-0"

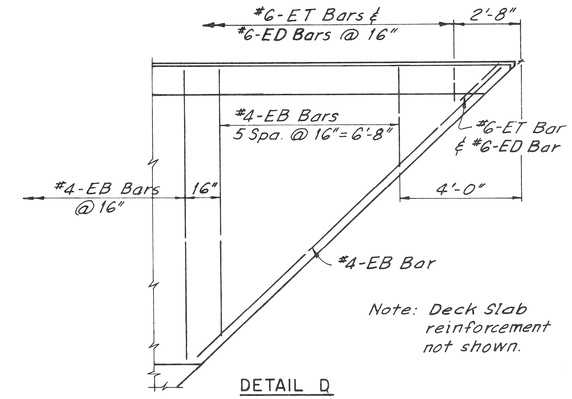

DETAIL D
Scale: 3/8"=1'-0"

BAR LAPS	
SIZE	LAP
#3	1'-0"
#4	1'-4"
#5	1'-8"
#6	2'-1"

NOTES:
FOR TYPICAL CROSS SECTION, SEE DECK DETAILS, SHEET 5-45.
FOR SECTION B-B, SEE DECK DETAILS, SHEET 5-46.
FOR DETAIL AT DRAIN CASTING, SEE DECK DETAILS, SHEET 5-46.
FOR GENERAL NOTES FOR SUPERSTRUCTURE, SEE DECK SLAB - SPAN 1, SHEET 5-41.

COOR'D	DESCRIPTION	DR'N	CK'D	AP'VD	DATE

REVISIONS LOCATED BY COORDINATES ON SHEET

REFERENCE DRAWINGS

DESIGNED BY	D. Sah
DRAWN BY	J. Thomas
TRACED BY	J. Thomas
CHECKED BY	J. Vargo

CITY OF DETROIT
JEFFERSON/CONNER INDUSTRIAL REVITALIZATION PROJECT
— MACK AVENUE IMPROVEMENTS —

MADISON MADISON INTERNATIONAL OF MICHIGAN
in association with
HNTB HOWARD NEEDLES TAMMEN & BERGENDOFF

MACK AVENUE OVER CONRAIL

DECK SLAB - SPAN 2

SHEET 542 OF 117 SHEETS
JOB NO. 8627
SCALE: AS SHOWN
DATE SEPTEMBER 3, 1987

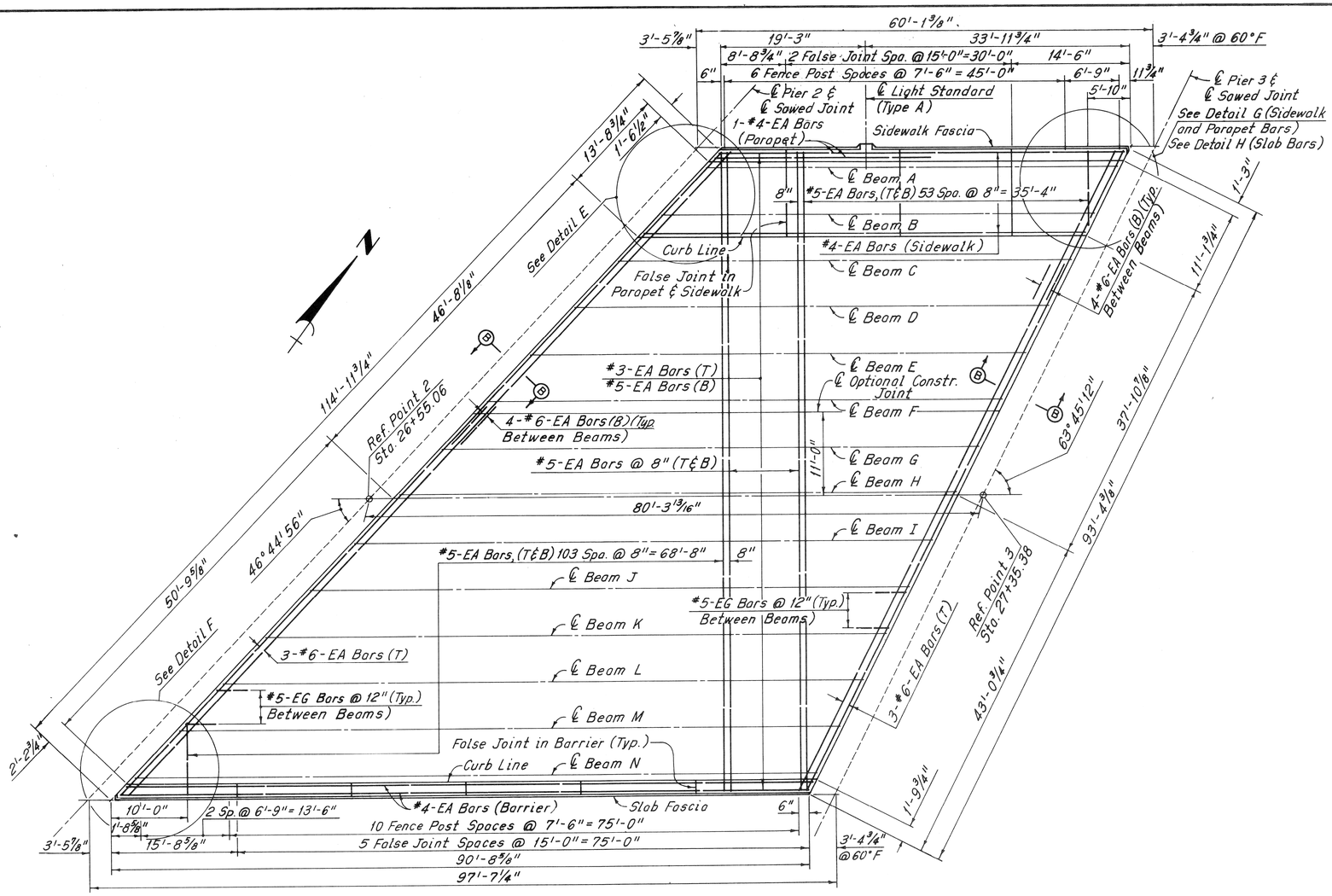

SLAB PLAN - SPAN 3
Scale: 1/8" = 1'-0"

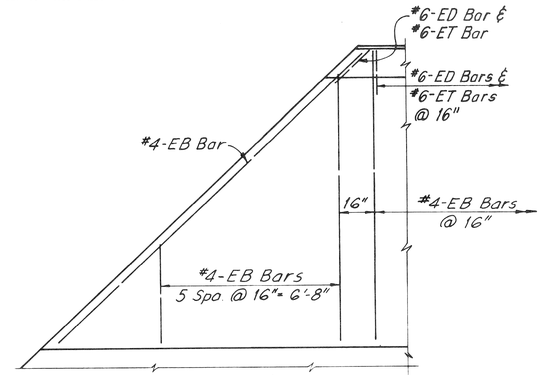

DETAIL E
Scale: 3/8" = 1'-0"
(Slab reinforcement not shown)

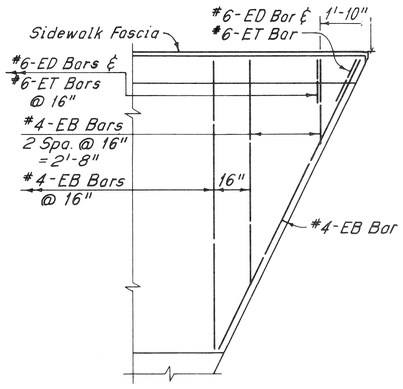

DETAIL G
Scale: 3/8" = 1'-0"
(Slab reinforcement not shown)

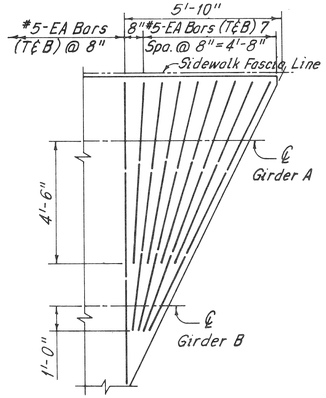

DETAIL H
Scale: 3/8" = 1'-0"
(Poroper & Sidewalk not shown)

BAR LAPS	
SIZE	LAP
#3	1'-0"
#4	1'-4"
#5	1'-8"
#6	2'-1"

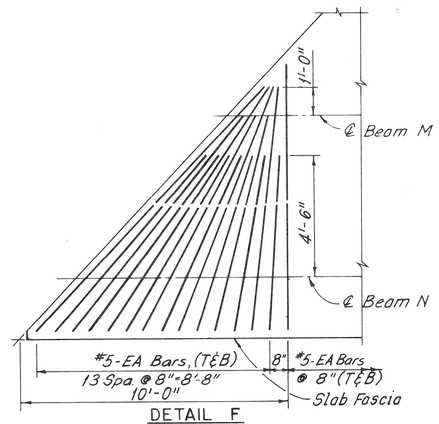

DETAIL F
Scale: 3/8" = 1'-0"
(Barrier not shown)

NOTES:
FOR TYPICAL CROSS SECTION, SEE DECK DETAILS, SHEET 5-45.

FOR SECTION B-B, SEE DECK DETAILS, SHEET 5-46

FOR DETAIL AT DRAIN CASTING, SEE DECK DETAILS, SHEET 5-46

FOR GENERAL NOTES FOR SUPERSTRUCTURE, SEE DECK SLAB - SPAN 1, SHEET 5-41.

COOR'D	DESCRIPTION	DR'N	CK'D	AP'VD	DATE
REVISIONS LOCATED BY COORDINATES ON SHEET					

REFERENCE DRAWINGS

DESIGNED BY	D. Soh
DRAWN BY	D. Ressler
TRACED BY	D. Ressler
CHECKED BY	J. Vargo

CITY OF DETROIT
JEFFERSON/CONNER INDUSTRIAL REVITALIZATION PROJECT
— MACK AVENUE IMPROVEMENTS —

MADISON MADISON INTERNATIONAL OF MICHIGAN
in association with
HNTB HOWARD NEEDLES TAMMEN & BERGENDOFF

DECK SLAB - SPAN 3

SHEET 543 OF 117 SHEETS
JOB NO. 8627
SCALE: AS SHOWN
DATE SEPTEMBER 3, 1987

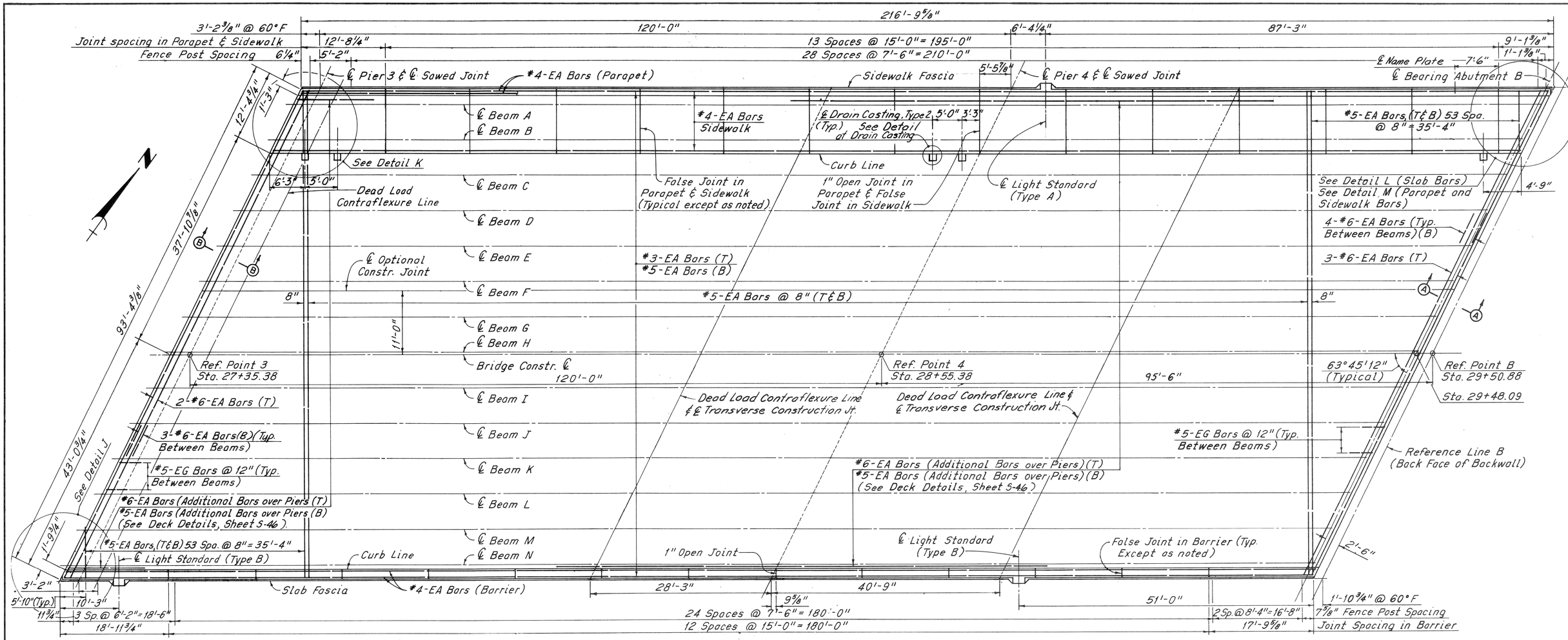

SLAB PLAN - SPANS 4 & 5
Scale: ⅛" = 1'-0"

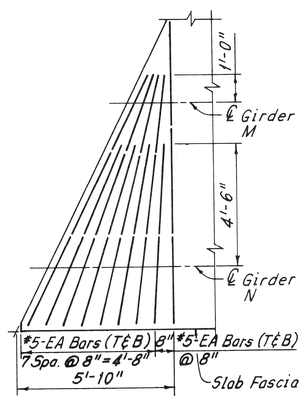

DETAIL J
Scale: ⅜" = 1'-0"
(Barrier not shown)

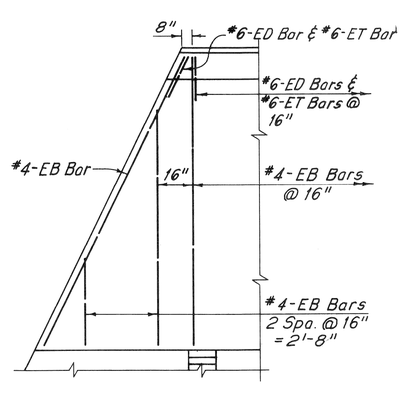

DETAIL K
Scale: ⅜" = 1'-0"
(Slab reinforcement not shown)

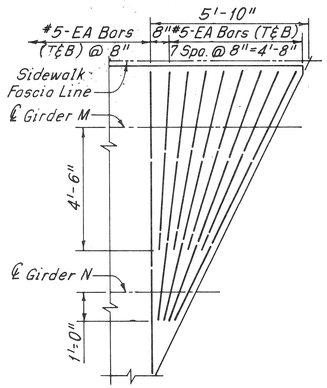

DETAIL L
Scale: ⅜" = 1'-0"
(Parapet & Sidewalk not shown)

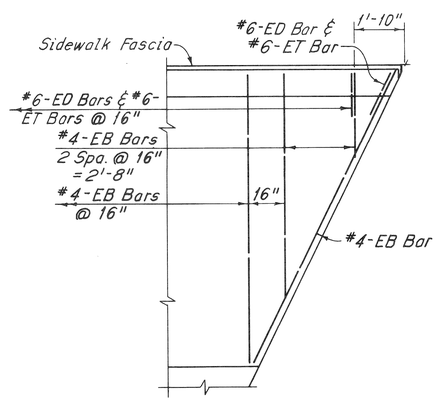

DETAIL M
Scale: ⅜" = 1'-0"
(Slab reinforcement not shown)

BAR LAPS	
SIZE	LAP
#3	1'-0"
#4	1'-4"
#5	1'-8"
#6	2'-1"

NOTES:
FOR TYPICAL CROSS SECTION SEE DECK DETAILS, SHEET S-45.
FOR SECTIONS A-A AND B-B SEE DECK DETAILS, SHEET S-46.
FOR DETAIL AT DRAIN CASTING, SEE DECK DETAILS, SHEET S-46.
FOR GENERAL NOTES FOR SUPERSTRUCTURE, SEE DECK SLAB - SPAN 1, SHEET S-41.

COOR'D	DESCRIPTION	DR'N	CK'D	AP'VD	DATE
REVISIONS LOCATED BY COORDINATES ON SHEET					

REFERENCE DRAWINGS

DESIGNED BY	D. Soh
DRAWN BY	D. Ressler
TRACED BY	D. Ressler
CHECKED BY	J. Vargo

CITY OF DETROIT
JEFFERSON/CONNER INDUSTRIAL REVITALIZATION PROJECT
— MACK AVENUE IMPROVEMENTS —

MADISON MADISON INTERNATIONAL OF MICHIGAN
in association with
HNTB HOWARD NEEDLES TAMMEN & BERGENDOFF

MACK AVENUE OVER CONRAIL

DECK SLAB SPANS 4 & 5

SHEET 544 OF 117 SHEETS
JOB NO. 8627
SCALE: AS SHOWN
DATE SEPTEMBER 3, 1987

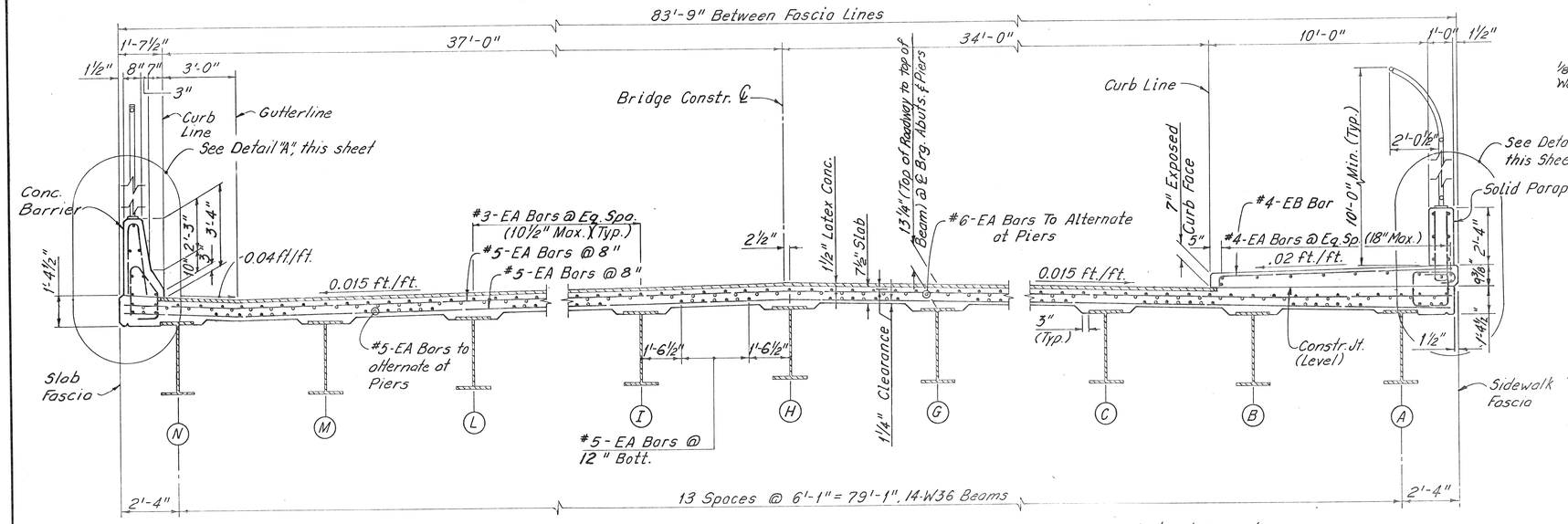

TYPICAL CROSS SECTION
(Looking Downstation)
(Shear Developers not shown)
Scale: ⅜" = 1'-0"

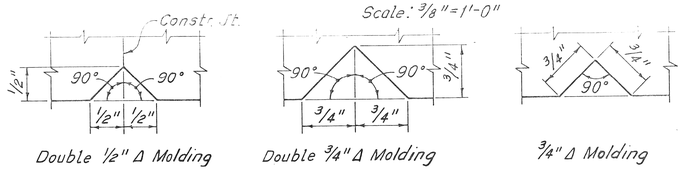

MOLDING DETAILS
Full Scale

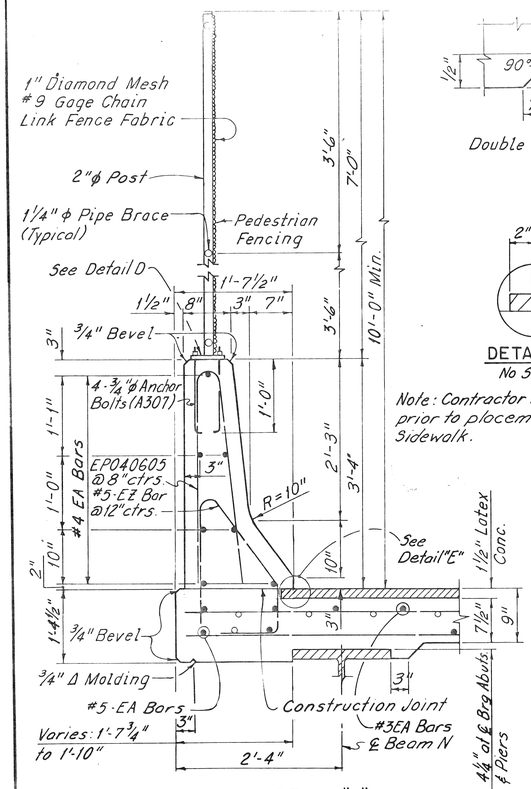

DETAIL "A"
No Scale

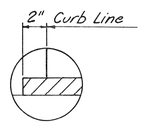

DETAIL "E"
No Scale

Note: Contractor may place overlay prior to placement of Barrier or Sidewalk.

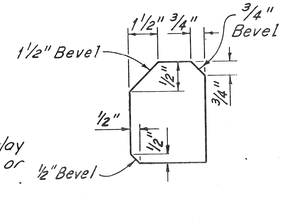

BEVEL DETAILS
No Scale

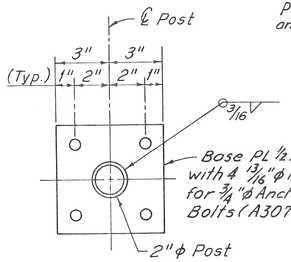

DETAIL "D"
Scale: 3" = 1'-0"

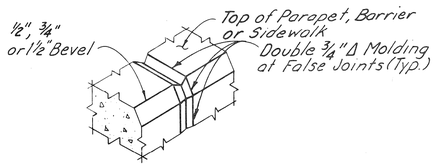

ISOMETRIC OF FALSE JOINT
No Scale

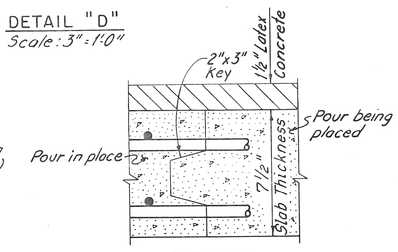

OPTIONAL
LONGITUDINAL CONSTRUCTION
JOIN IN SLAB
No Scale

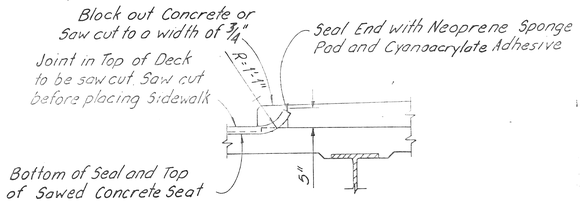

TRANSVERSE CONSTRUCTION
JOINT AT SIDEWALK
No Scale

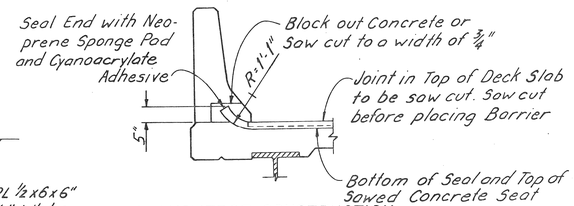

TRANSVERSE CONSTRUCTION
JOINT AT BARRIER RAILING
No Scale

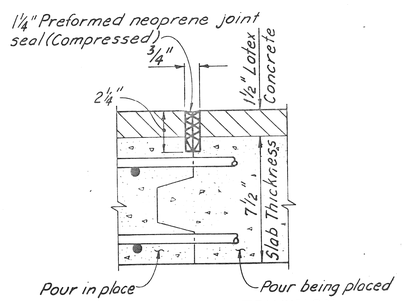

TRANSVERSE CONSTRUCTION
JOINT IN SLAB
No Scale

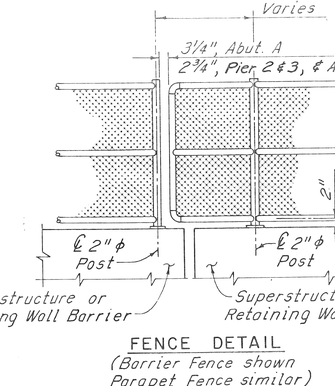

SAW CUT JOINT AT PIER
No Scale

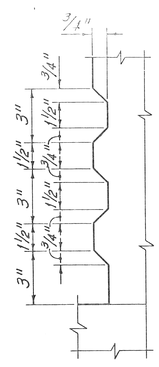

DETAIL "C"
No Scale

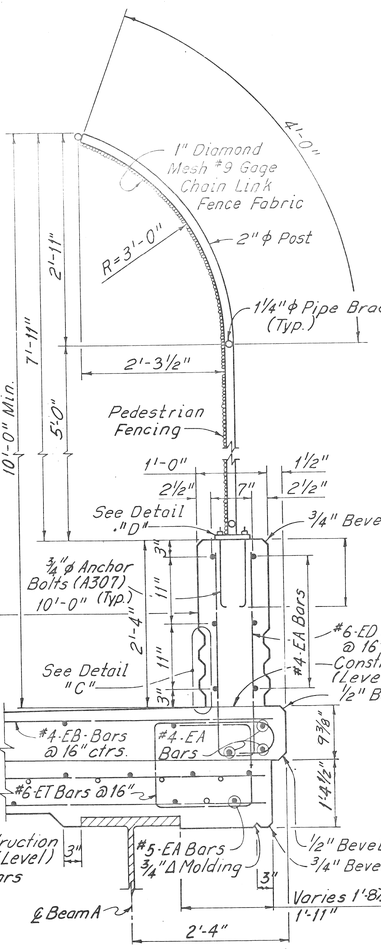

DETAIL "B"
No Scale

NOTE
FOR GENERAL NOTES FOR SUPERSTRUCTURE, SEE DECK SLAB - SPAN 1, SHEET 5-41.

FENCE DETAIL
(Barrier Fence shown
Parapet Fence similar)
(No Scale)

COOR'D	DESCRIPTION	DR'N	CK'D	AP'VD	DATE
REVISIONS LOCATED BY COORDINATES ON SHEET					

REFERENCE DRAWINGS

DESIGNED BY	D. Sah
DRAWN BY	D. Ressler
TRACED BY	D. Ressler
CHECKED BY	J. Vargo

CITY OF DETROIT
JEFFERSON/CONNER INDUSTRIAL
REVITALIZATION PROJECT
— MACK AVENUE IMPROVEMENTS —

MADISON MADISON INTERNATIONAL OF MICHIGAN
in association with
HNTB
HOWARD NEEDLES TAMMEN & BERGENDOFF

MACK AVENUE OVER CONRAIL

DECK DETAILS

SHEET 545 OF 117 SHEETS
JOB NO. 8627
SCALE: AS SHOWN
DATE SEPTEMBER 3, 1987

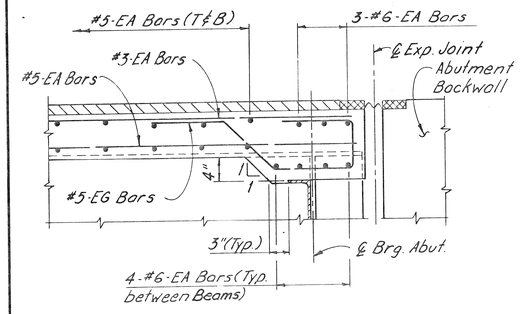

SECTION A-A
Scale: 1"=1'-0"

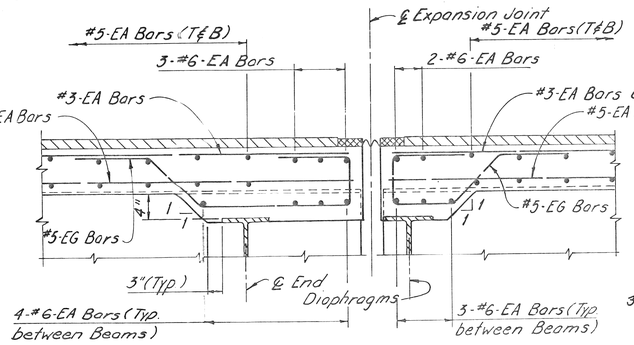

SECTION B-B
Scale: 1"=1'-0"

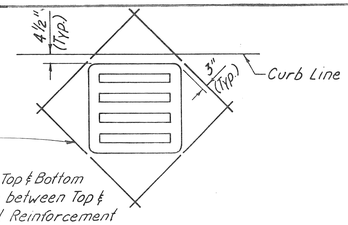

DETAIL AT DRAIN CASTING
No Scale

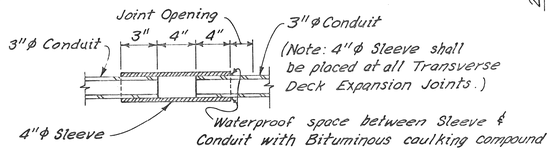

CONDUIT EXPANSION JOINT DETAIL
No Scale

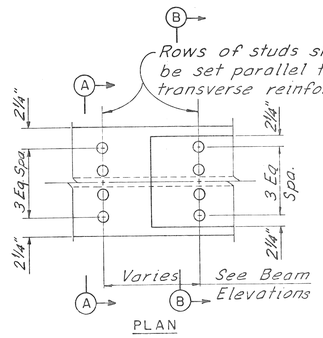

PLAN

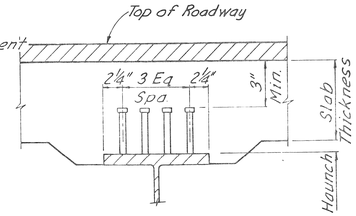

SECTION A-A

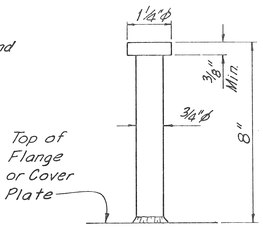

DETAIL OF STUD

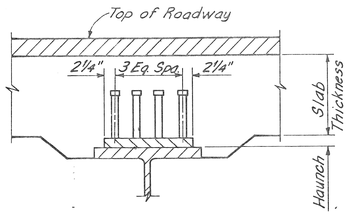

SECTION B-B

STUD SHEAR DEVELOPER DETAILS
No Scale

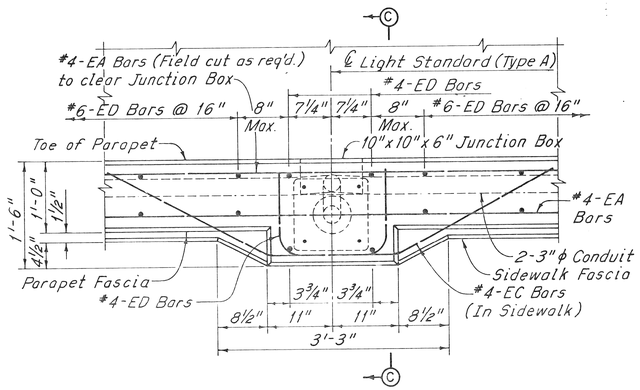

LIGHT STANDARD - TYPE A
Scale: 1"=1'-0"

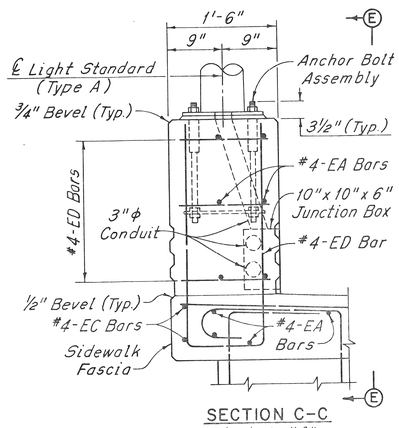

SECTION C-C
Scale: 1"=1'-0"

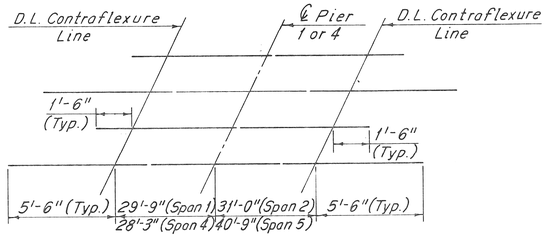

ADDITIONAL BARS OVER PIERS 1 AND 4
No Scale

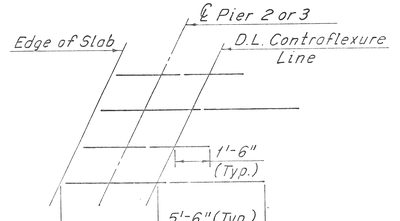

ADDITIONAL BARS OVER PIERS 2 AND 3
(Pier 3 shown, Pier 2 similar)
(No Scale)

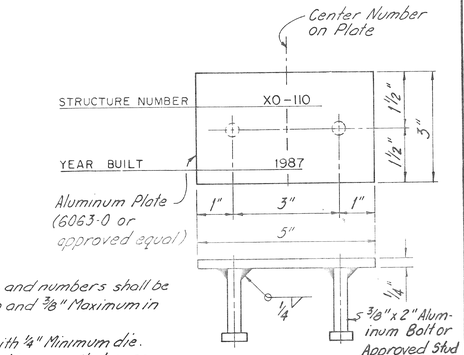

NAME PLATE
No Scale
(2 Required)

Notes:
Letters and numbers shall be ¼" Minimum and ⅜" Maximum in height.
Stamp with ¼" Minimum die.
Date shall be year that superstructure was completed.

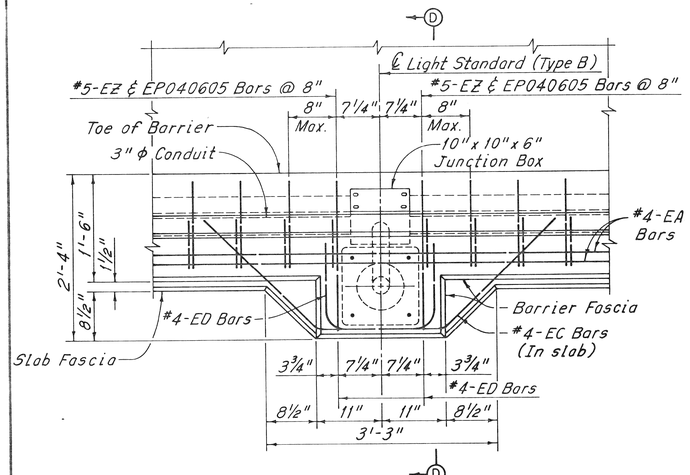

LIGHT STANDARD - TYPE B
Scale: 1"=1'-0"

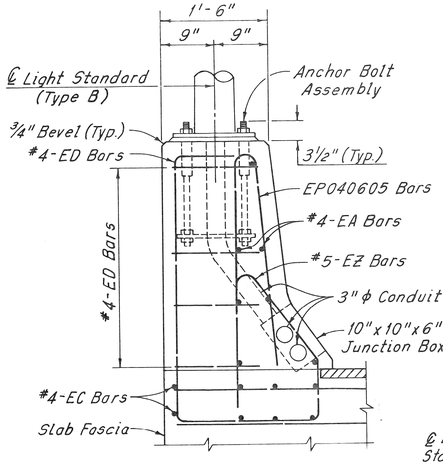

SECTION D-D
No Scale

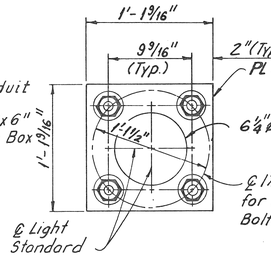

VIEW E-E
Scale: 1"=1'-0"

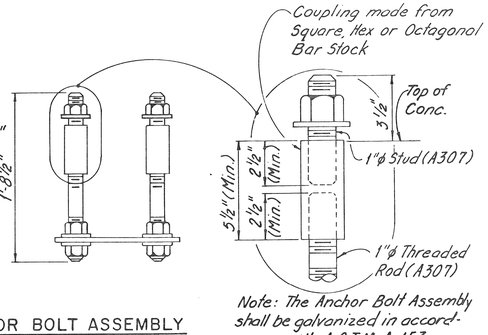

ANCHOR BOLT ASSEMBLY
No Scale

Note: The Anchor Bolt Assembly shall be galvanized in accordance with A.S.T.M A-153.

NOTES:

FOR LOCATION OF SECTION A-A, SEE DECK SLAB - SPAN 1, SHEET S-41 AND DECK SLAB - SPANS 4 & 5, SHEET S-44.

FOR LOCATION OF SECTION B-B, SEE DECK SLAB - SPAN 2, SHEET S-42 DECK SLAB - SPAN 3, SHEET S-43 AND DECK SLAB - SPANS 4 AND 5, SHEET S-44.

FOR LOCATION OF LIGHT STANDARDS SEE DECK SLAB, SHEETS S-41 THRU S-44

FOR LOCATION OF DRAIN CASTINGS SEE DECK SLAB, SHEETS S-41 THRU SHEET S-44

FOR GENERAL NOTES FOR SUPERSTRUCTURE SEE DECK SLAB - SPAN 1, SHEET S-41.

FOR LOCATION OF NAME PLATE SEE DECK SLAB SHEET S-41 AND S-44.

COOR'D	DESCRIPTION	DR'N	CK'D	AP'VD	DATE
REVISIONS LOCATED BY COORDINATES ON SHEET					

REFERENCE DRAWINGS

DESIGNED BY	D. Soh
DRAWN BY	D. Ressler, J. Vargo
TRACED BY	D. Ressler, J. Vargo
CHECKED BY	C. Cvitkovich

CITY OF DETROIT
JEFFERSON/CONNER INDUSTRIAL REVITALIZATION PROJECT
— MACK AVENUE IMPROVEMENTS —

MADISON MADISON INTERNATIONAL OF MICHIGAN
in association with
HNTB HOWARD NEEDLES TAMMEN & BERGENDOFF

MACK AVENUE OVER CONRAIL
DECK DETAILS

SHEET 546 OF 117 SHEETS
JOB NO. 8627
SCALE: AS SHOWN
DATE SEPTEMBER 3, 1987

	TOP OF BEAM ELEVATIONS-STAGE A																															
		SPAN 1										SPAN 2										SPAN 3										
	ABUTMENT A	0.1	0.2	0.3	0.4	0.5	0.6	0.7	0.8	0.9	PIER 1	0.1	0.2	0.3	0.4	0.5	0.6	0.7	0.8	0.9	PIER 2	0.1	0.2	0.3	0.4	0.5	0.6	0.7	0.8	0.9	PIER 3
BEAM A	139.27	139.58	139.86	140.12	140.35	140.56	140.73	140.89	141.03	141.17	141.30	141.45	141.59	141.72	141.84	141.94	142.02	142.07	142.10	142.10	142.08	142.08	142.10	142.11	142.11	142.10	142.08	142.05	142.01	141.96	141.94
BEAM B	139.12	139.43	139.73	139.99	140.23	140.44	140.63	140.79	140.94	141.08	141.22	141.37	141.52	141.66	141.79	141.90	141.98	142.04	142.07	142.08	142.07	142.08	142.10	142.12	142.12	142.12	142.10	142.07	142.03	141.98	141.96
BEAM C	139.01	139.33	139.62	139.89	140.14	140.36	140.55	140.72	140.88	141.04	141.19	141.34	141.50	141.64	141.77	141.89	141.98	142.04	142.08	142.10	142.11	142.12	142.15	142.17	142.18	142.18	142.17	142.14	142.10	142.05	142.03
BEAM D	138.94	139.26	139.57	139.85	140.10	140.32	140.52	140.70	140.87	141.03	141.19	141.35	141.51	141.66	141.80	141.92	142.02	142.09	142.14	142.17	142.18	142.20	142.24	142.27	142.28	142.29	142.27	142.25	142.21	142.16	142.13
BEAM E	138.87	139.20	139.51	139.79	140.05	140.28	140.49	140.68	140.85	141.02	141.18	141.35	141.52	141.68	141.83	141.95	142.06	142.14	142.20	142.25	142.25	142.28	142.32	142.36	142.38	142.39	142.38	142.35	142.31	142.26	142.24
BEAM F	138.79	139.13	139.44	139.73	140.00	140.24	140.46	140.65	140.83	141.01	141.18	141.35	141.53	141.69	141.85	141.98	142.09	142.18	142.25	142.29	142.31	142.35	142.40	142.45	142.47	142.49	142.48	142.46	142.42	142.37	142.34
BEAM G	138.71	139.05	139.37	139.67	139.95	140.19	140.42	140.62	140.81	140.99	141.17	141.35	141.53	141.70	141.86	142.01	142.13	142.22	142.29	142.34	142.37	142.42	142.48	142.53	142.56	142.58	142.58	142.56	142.52	142.47	142.45
BEAM H	138.62	138.97	139.30	139.61	139.89	140.14	140.37	140.58	140.78	140.96	141.15	141.34	141.53	141.71	141.88	142.03	142.15	142.25	142.33	142.39	142.43	142.48	142.56	142.61	142.65	142.68	142.68	142.66	142.62	142.57	142.55
BEAM I	138.35	138.71	139.05	139.36	139.65	139.91	140.15	140.36	140.57	140.76	140.95	141.15	141.35	141.53	141.71	141.87	142.00	142.11	142.19	142.26	142.30	142.37	142.45	142.52	142.56	142.59	142.60	142.58	142.55	142.50	142.48
BEAM J	138.08	138.44	138.78	139.11	139.40	139.67	139.91	140.14	140.35	140.55	140.75	140.95	141.15	141.35	141.53	141.69	141.83	141.95	142.04	142.11	142.17	142.24	142.33	142.41	142.46	142.50	142.51	142.50	142.46	142.42	142.39
BEAM K	137.80	138.16	138.52	138.85	139.15	139.42	139.67	139.90	140.12	140.33	140.54	140.75	140.96	141.16	141.35	141.52	141.67	141.79	141.89	141.97	142.03	142.11	142.22	142.30	142.36	142.40	142.42	142.41	142.38	142.33	142.31
BEAM L	137.53	137.89	138.24	138.58	138.89	139.17	139.43	139.67	139.89	140.11	140.32	140.54	140.76	140.97	141.16	141.34	141.49	141.62	141.73	141.82	141.89	141.98	142.09	142.19	142.26	142.30	142.32	142.32	142.29	142.25	142.22
BEAM M	137.25	137.62	137.97	138.31	138.63	138.92	139.18	139.43	139.66	139.88	140.10	140.33	140.55	140.77	140.97	141.16	141.32	141.46	141.57	141.66	141.74	141.85	141.97	142.07	142.15	142.20	142.23	142.23	142.20	142.16	142.14
BEAM N	137.11	137.47	137.82	138.17	138.49	138.79	139.06	139.31	139.55	139.78	140.01	140.24	140.47	140.69	140.90	141.09	141.26	141.41	141.53	141.63	141.71	141.83	141.97	142.08	142.17	142.23	142.26	142.27	142.24	142.20	142.18

	TOP OF BEAM ELEVATIONS-STAGE A											TOP OF BEAM ELEVATIONS-STAGE A									
		SPAN 4										SPAN 5									
	PIER 3	0.1	0.2	0.3	0.4	0.5	0.6	0.7	0.8	0.9	PIER 4	0.1	0.2	0.3	0.4	0.5	0.6	0.7	0.8	0.9	ABUTMENT B
BEAM A	141.94	141.92	141.88	141.80	141.68	141.52	141.33	141.10	140.85	140.58	140.31	140.11	139.90	139.69	139.47	139.25	139.00	138.73	138.45	138.14	137.82
BEAM B	141.96	141.95	141.91	141.84	141.72	141.57	141.38	141.15	140.90	140.64	140.37	140.17	139.97	139.76	139.55	139.33	139.08	138.82	138.54	138.23	137.91
BEAM C	142.03	142.01	141.97	141.90	141.79	141.64	141.45	141.24	141.00	140.74	140.48	140.29	140.09	139.89	139.67	139.45	139.21	138.95	138.67	138.37	138.06
BEAM D	142.13	142.12	142.09	142.02	141.91	141.77	141.59	141.38	141.14	140.89	140.64	140.44	140.25	140.05	139.84	139.62	139.38	139.13	138.85	138.56	138.24
BEAM E	142.24	142.23	142.20	142.14	142.03	141.90	141.72	141.51	141.28	141.04	140.79	140.60	140.41	140.21	140.00	139.79	139.56	139.30	139.03	138.74	138.43
BEAM F	142.34	142.34	142.31	142.25	142.16	142.02	141.85	141.65	141.42	141.18	140.94	140.75	140.56	140.37	140.17	139.95	139.73	139.48	139.21	138.92	138.61
BEAM G	142.45	142.45	142.43	142.37	142.28	142.15	141.98	141.78	141.56	141.33	141.08	140.90	140.72	140.53	140.33	140.12	139.90	139.65	139.38	139.10	138.80
BEAM H	142.55	142.56	142.54	142.49	142.40	142.27	142.11	141.92	141.70	141.47	141.23	141.05	140.87	140.69	140.49	140.29	140.06	139.82	139.56	139.28	138.98
BEAM I	142.48	142.49	142.47	142.42	142.34	142.22	142.06	141.87	141.66	141.43	141.20	141.03	140.85	140.67	140.48	140.27	140.05	139.82	139.56	139.28	138.99
BEAM J	142.39	142.41	142.40	142.35	142.27	142.16	142.01	141.82	141.61	141.39	141.16	140.99	140.82	140.64	140.45	140.25	140.04	139.80	139.55	139.27	138.98
BEAM K	142.31	142.33	142.32	142.28	142.21	142.10	141.95	141.77	141.57	141.35	141.13	140.96	140.79	140.61	140.43	140.23	140.02	139.79	139.54	139.27	138.98
BEAM L	142.22	142.25	142.25	142.21	142.14	142.03	141.89	141.72	141.52	141.30	141.08	140.92	140.75	140.58	140.40	140.21	140.00	139.77	139.53	139.26	138.97
BEAM M	142.14	142.17	142.17	142.14	142.07	141.97	141.83	141.66	141.47	141.26	141.05	140.88	140.72	140.55	140.38	140.19	139.98	139.76	139.51	139.25	138.97
BEAM N	142.18	142.21	142.21	142.19	142.13	142.03	141.89	141.73	141.54	141.34	141.13	140.97	140.81	140.65	140.47	140.29	140.09	139.87	139.63	139.36	139.09

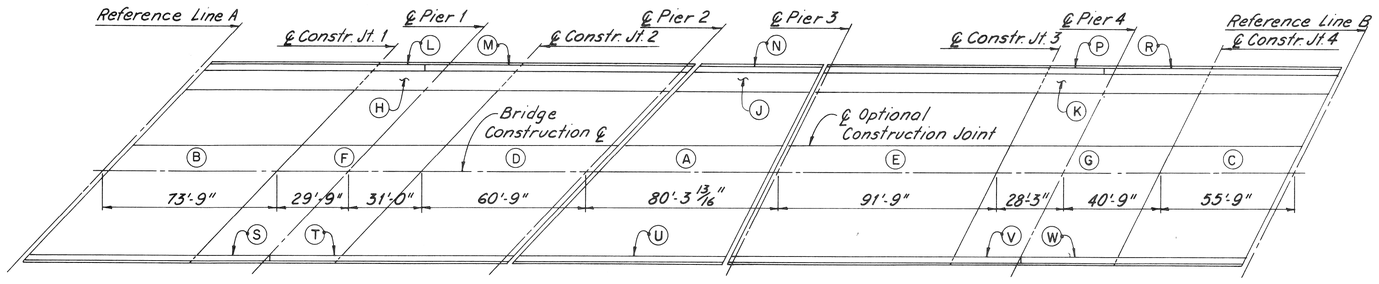

POURING SEQUENCE
No Scale

NOTE:
STAGE A—STRUCTURAL STEEL ERECTED WITH NO LOADS APPLIED. (ALL SPANS COMPLETED).

NOTES FOR POURING SEQUENCE

POURS SHALL BE MADE IN ALPHABETICAL ORDER.

POURS B AND C MAY BE MADE AT THE SAME TIME, AFTER POUR A.

POURS D AND E MAY BE MADE AT THE SAME TIME.

POURS F AND G MAY BE MADE AT THE SAME TIME.

IT IS RECOMMENDED THAT THE PLACING OF DECK CONCRETE PROGRESS TOWARD THE EXPANSION JOINT DEVICES.

FOR GENERAL NOTES FOR SUPERSTRUCTURE, SEE DECK SLAB - SPAN 1, SHEET S-41

COORD	DESCRIPTION	DR'N	CK'D	AP'VD	DATE
REVISIONS LOCATED BY COORDINATES ON SHEET					

REFERENCE DRAWINGS

DESIGNED BY	D. Soh
DRAWN BY	C. Cvitkovich
TRACED BY	P. Kosekaldo
CHECKED BY	N. Farah

CITY OF DETROIT
JEFFERSON/CONNER INDUSTRIAL REVITALIZATION PROJECT
— MACK AVENUE IMPROVEMENTS —

MADISON MADISON INTERNATIONAL OF MICHIGAN
in association with
HNTB HOWARD NEEDLES TAMMEN & BERGENDOFF

MACK AVENUE OVER CONRAIL
BEAM ELEVATIONS AND DECK POURING SEQUENCE

SHEET 547 OF 117 SHEETS
JOB NO. 8627
SCALE NO SCALE
DATE SEPTEMBER 3, 1987

TOP OF BEAM ELEVATIONS-STAGE B																																	
		SPAN 1										SPAN 2										SPAN 3											
	ABUTMENT A	0.1	0.2	0.3	0.4	0.5	0.6	0.7	0.8	0.9	PIER 1	0.1	0.2	0.3	0.4	0.5	0.6	0.7	0.8	0.9	PIER 2	0.1	0.2	0.3	0.4	0.5	0.6	0.7	0.8	0.9	PIER 3
BEAM A	139.27	139.57	139.85	140.11	140.34	140.54	140.72	140.88	141.03	141.17	141.30	141.45	141.58	141.71	141.83	141.93	142.01	142.06	142.09	142.09	142.08	142.08	142.10	142.11	142.11	142.10	142.08	142.05	142.01	141.96	141.94
BEAM B	139.12	139.43	139.72	139.98	140.22	140.45	140.61	140.78	140.93	141.08	141.22	141.37	141.52	141.65	141.78	141.89	141.97	142.03	142.06	142.08	142.07	142.08	142.10	142.12	142.12	142.11	142.10	142.07	142.03	141.98	141.96
BEAM C	139.01	139.32	139.61	139.88	140.12	140.34	140.54	140.72	140.88	141.03	141.19	141.34	141.49	141.63	141.76	141.88	141.97	142.03	142.08	142.10	142.11	142.12	142.15	142.17	142.18	142.18	142.16	142.13	142.10	142.05	142.03
BEAM D	138.94	139.26	139.56	139.83	140.08	140.31	140.51	140.70	140.87	141.03	141.19	141.35	141.51	141.66	141.79	141.91	142.01	142.08	142.13	142.17	142.18	142.20	142.24	142.26	142.28	142.28	142.27	142.24	142.20	142.16	142.13
BEAM E	138.87	139.19	139.50	139.78	140.04	140.27	140.48	140.67	140.85	141.02	141.18	141.35	141.52	141.67	141.82	141.94	142.05	142.13	142.19	142.23	142.25	142.28	142.32	142.35	142.37	142.38	142.37	142.35	142.31	142.26	142.24
BEAM F	138.79	139.12	139.43	139.72	139.99	140.23	140.44	140.64	140.83	141.00	141.18	141.35	141.52	141.69	141.84	141.97	142.08	142.17	142.24	142.28	142.31	142.35	142.40	142.44	142.46	142.48	142.47	142.45	142.42	142.37	142.34
BEAM G	138.71	139.04	139.36	139.66	139.93	140.18	140.40	140.61	140.80	140.98	141.17	141.35	141.53	141.70	141.86	142.00	142.11	142.21	142.28	142.34	142.37	142.42	142.48	142.52	142.55	142.57	142.57	142.55	142.52	142.47	142.45
BEAM H	138.62	138.96	139.29	139.59	139.87	140.13	140.36	140.57	140.77	140.96	141.15	141.34	141.53	141.70	141.87	142.01	142.14	142.24	142.32	142.38	142.43	142.48	142.55	142.60	142.64	142.66	142.67	142.65	142.62	142.57	142.55
BEAM I	138.35	138.70	139.04	139.35	139.63	139.90	140.14	140.36	140.56	140.76	140.95	141.15	141.34	141.53	141.70	141.85	141.99	142.10	142.18	142.25	142.30	142.37	142.44	142.51	142.55	142.58	142.58	142.57	142.54	142.50	142.48
BEAM J	138.08	138.43	138.77	139.09	139.39	139.65	139.90	140.13	140.34	140.55	140.75	140.95	141.15	141.34	141.52	141.68	141.82	141.94	142.03	142.11	142.17	142.24	142.33	142.40	142.45	142.48	142.49	142.49	142.46	142.41	142.39
BEAM K	137.80	138.16	138.51	138.83	139.13	139.41	139.66	139.90	140.12	140.33	140.54	140.75	140.95	141.15	141.34	141.51	141.65	141.78	141.88	141.96	142.03	142.11	142.21	142.29	142.35	142.39	142.40	142.40	142.37	142.33	142.31
BEAM L	137.53	137.88	138.23	138.57	138.88	139.16	139.42	139.66	139.89	140.11	140.32	140.54	140.75	140.96	141.15	141.33	141.48	141.61	141.72	141.81	141.89	141.98	142.09	142.17	142.24	142.29	142.31	142.31	142.28	142.24	142.22
BEAM M	137.25	137.61	137.96	138.30	138.61	138.90	139.17	139.42	139.66	139.88	140.10	140.33	140.55	140.76	140.96	141.15	141.31	141.44	141.56	141.66	141.74	141.84	141.96	142.06	142.13	142.19	142.21	142.21	142.20	142.16	142.14
BEAM N	137.11	137.46	137.81	138.15	138.48	138.77	139.05	139.30	139.55	139.78	140.01	140.24	140.47	140.69	140.90	141.09	141.25	141.40	141.52	141.63	141.71	141.83	141.96	142.07	142.16	142.22	142.25	142.25	142.24	142.20	142.18

TOP OF BEAM ELEVATIONS-STAGE B																						
		SPAN 4										SPAN 5										
	PIER 3	0.1	0.2	0.3	0.4	0.5	0.6	0.7	0.8	0.9	PIER 4	0.1	0.2	0.3	0.4	0.5	0.6	0.7	0.8	0.9	ABUTMENT B
BEAM A	141.94	141.92	141.87	141.78	141.66	141.51	141.31	141.09	140.84	140.58	140.31	140.11	139.90	139.69	139.47	139.24	138.99	138.73	138.44	138.14	137.82
BEAM B	141.96	141.94	141.89	141.82	141.70	141.55	141.36	141.14	140.90	140.64	140.37	140.17	139.97	139.76	139.55	139.32	139.08	138.81	138.53	138.23	137.91
BEAM C	142.03	142.00	141.96	141.88	141.77	141.62	141.44	141.23	140.99	140.74	140.48	140.29	140.09	139.88	139.67	139.44	139.20	138.94	138.67	138.37	138.06
BEAM D	142.13	142.11	142.07	142.00	141.89	141.75	141.57	141.36	141.13	140.89	140.64	140.44	140.25	140.05	139.83	139.61	139.38	139.12	138.85	138.55	138.24
BEAM E	142.24	142.23	142.19	142.12	142.01	141.88	141.70	141.50	141.28	141.03	140.79	140.60	140.40	140.21	140.00	139.78	139.55	139.30	139.03	138.75	138.43
BEAM F	142.34	142.33	142.30	142.23	142.14	142.00	141.83	141.64	141.42	141.18	140.94	140.75	140.56	140.37	140.16	139.95	139.72	139.47	139.20	138.92	138.61
BEAM G	142.45	142.44	142.41	142.35	142.26	142.13	141.96	141.77	141.55	141.32	141.08	140.90	140.72	140.53	140.33	140.11	139.89	139.64	139.38	139.10	138.80
BEAM H	142.55	142.55	142.52	142.47	142.38	142.25	142.09	141.90	141.69	141.47	141.23	141.05	140.87	140.68	140.49	140.28	140.06	139.81	139.55	139.27	138.98
BEAM I	142.48	142.48	142.46	142.40	142.32	142.20	142.04	141.86	141.65	141.43	141.20	141.03	140.85	140.66	140.47	140.27	140.05	139.81	139.55	139.28	138.99
BEAM J	142.39	142.40	142.38	142.33	142.25	142.14	141.99	141.81	141.61	141.39	141.16	140.99	140.82	140.64	140.45	140.25	140.03	139.80	139.54	139.27	138.98
BEAM K	142.31	142.32	142.31	142.26	142.19	142.08	141.95	141.76	141.56	141.35	141.13	140.96	140.79	140.61	140.42	140.23	140.01	139.78	139.55	139.26	138.98
BEAM L	142.22	142.24	142.23	142.19	142.12	142.01	141.87	141.70	141.51	141.30	141.08	140.92	140.75	140.58	140.40	140.20	139.99	139.77	139.52	139.25	138.97
BEAM M	142.14	142.16	142.15	142.12	142.05	141.95	141.81	141.65	141.46	141.26	141.05	140.88	140.72	140.55	140.37	140.18	139.97	139.75	139.51	139.24	138.97
BEAM N	142.18	142.20	142.20	142.17	142.11	142.01	141.88	141.72	141.53	141.34	141.13	140.97	140.81	140.65	140.47	140.29	140.08	139.86	139.62	139.36	139.09

NOTE:
STAGE B IS FORMS AND STEEL REINFORCEMENT IN PLACE. (ALL SPANS COMPLETED).

COOR'D	DESCRIPTION	DR'N	CK'D	AP'VD	DATE
REVISIONS LOCATED BY COORDINATES ON SHEET					

REFERENCE DRAWINGS

DESIGNED BY: D. Soh
DRAWN BY: C. Cvitkovich
TRACED BY: P. Kosekolda
CHECKED BY: N. Farah

CITY OF DETROIT
JEFFERSON/CONNER INDUSTRIAL REVITALIZATION PROJECT
— MACK AVENUE IMPROVEMENTS —

MADISON MADISON INTERNATIONAL OF MICHIGAN
in association with
HNTB HOWARD NEEDLES TAMMEN & BERGENDOFF

MACK AVENUE OVER CONRAIL

BEAM ELEVATIONS

SHEET 548 OF 117 SHEETS
JOB NO. 8627
SCALE: —
DATE SEPTEMBER 3, 1987

	BOTTOM OF SLAB ELEVATIONS																																
		SPAN 1										SPAN 1										SPAN 1										SPAN 2	
	ABUTMENT A	0.1	0.2	0.3	0.4	0.5	0.6	0.7	0.8	0.9	PIER 1	0.1	0.2	0.3	0.4	0.5	0.6	0.7	0.8	0.9	PIER 2	0.1	0.2	0.3	0.4	0.5	0.6	0.7	0.8	0.9	PIER 3	0.1	0.2
BEAM A	139.63	139.95	140.22	140.48	140.71	140.91	141.09	141.24	141.39	141.52	141.66	141.80	141.80	141.94	142.07	142.20	142.30	142.37	142.42	142.45	142.45	142.44	142.44	142.45	142.46	142.46	142.45	142.43	142.40	142.36	142.32	142.30	142.28	142.23
BEAM B	139.48	139.79	140.08	140.35	140.59	140.80	140.98	141.14	141.29	141.43	141.58	141.72	141.87	142.01	142.14	142.25	142.34	142.39	142.43	142.43	142.43	142.43	142.43	142.46	142.47	142.48	142.47	142.46	142.42	142.38	142.33	142.31	142.30	142.26
BEAM C	139.37	139.68	139.98	140.25	140.49	140.71	140.90	141.08	141.24	141.39	141.54	141.70	141.85	141.99	142.13	142.24	142.33	142.40	142.44	142.46	142.46	142.47	142.51	142.53	142.54	142.54	142.52	142.49	142.45	142.40	142.38	142.37	142.33	142.29
BEAM D	139.30	139.62	139.92	140.20	140.45	140.68	140.88	141.06	141.22	141.38	141.54	141.70	141.86	142.02	142.16	142.28	142.37	142.45	142.50	142.52	142.52	142.53	142.55	142.59	142.62	142.64	142.64	142.63	142.60	142.56	142.51	142.49	142.48	142.44
BEAM E	139.22	139.55	139.86	140.15	140.40	140.64	140.85	141.03	141.21	141.37	141.54	141.71	141.87	142.03	142.18	142.31	142.41	142.49	142.55	142.58	142.58	142.60	142.63	142.68	142.71	142.73	142.74	142.73	142.71	142.67	142.62	142.59	142.59	142.56
BEAM F	139.14	139.48	139.80	140.09	140.36	140.59	140.81	141.00	141.19	141.36	141.53	141.71	141.88	142.05	142.20	142.34	142.45	142.54	142.60	142.64	142.67	142.70	142.76	142.80	142.83	142.84	142.83	142.81	142.77	142.72	142.70	142.70	142.71	142.69
BEAM G	139.06	139.40	139.73	140.03	140.30	140.55	140.77	140.97	141.16	141.34	141.52	141.70	141.88	142.06	142.22	142.36	142.48	142.57	142.64	142.69	142.73	142.77	142.83	142.89	142.92	142.94	142.93	142.91	142.88	142.83	142.80	142.80	142.84	142.84
BEAM H	138.97	139.32	139.65	139.96	140.24	140.50	140.73	140.93	141.13	141.32	141.50	141.69	141.88	142.06	142.23	142.38	142.51	142.61	142.69	142.74	142.78	142.84	142.91	142.97	143.01	143.03	143.03	143.01	142.98	142.93	142.90	142.90	142.96	142.99
BEAM I	138.71	139.06	139.40	139.72	140.00	140.26	140.50	140.72	140.92	141.11	141.31	141.50	141.70	141.89	142.06	142.22	142.35	142.46	142.55	142.61	142.66	142.72	142.80	142.87	142.92	142.94	142.95	142.94	142.90	142.85	142.83	142.83	142.91	142.96
BEAM J	138.43	138.79	139.14	139.46	139.75	140.02	140.27	140.49	140.70	140.90	141.10	141.31	141.51	141.70	141.88	142.05	142.19	142.30	142.40	142.47	142.52	142.60	142.69	142.76	142.82	142.85	142.86	142.85	142.82	142.77	142.75	142.75	142.84	142.90
BEAM K	138.16	138.52	138.87	139.20	139.50	139.78	140.03	140.26	140.47	140.68	140.89	141.10	141.31	141.51	141.70	141.87	142.02	142.14	142.24	142.32	142.38	142.47	142.57	142.65	142.72	142.75	142.77	142.76	142.73	142.69	142.66	142.66	142.76	142.83
BEAM L	137.88	138.24	138.60	138.93	139.24	139.53	139.78	140.02	140.25	140.46	140.68	140.89	141.11	141.32	141.52	141.69	141.85	141.98	142.09	142.17	142.24	142.34	142.45	142.54	142.61	142.66	142.68	142.67	142.65	142.60	142.58	142.58	142.68	142.76
BEAM M	137.61	137.97	138.32	138.67	138.98	139.27	139.54	139.78	140.01	140.24	140.46	140.68	140.91	141.12	141.33	141.51	141.67	141.81	141.92	142.02	142.09	142.20	142.32	142.43	142.50	142.56	142.58	142.58	142.56	142.51	142.49	142.49	142.59	142.68
BEAM N	137.46	137.82	138.18	138.52	138.84	139.14	139.41	139.66	139.90	140.13	140.36	140.59	140.82	141.05	141.26	141.45	141.62	141.76	141.88	141.98	142.07	142.19	142.32	142.44	142.53	142.59	142.62	142.62	142.60	142.55	142.53	142.53	142.63	142.72

	BOTTOM OF SLAB ELEVATIONS																																
		SPAN 2									SPAN 2											SPAN 3										SPAN 3	
	PIER 2	0.3	0.4	0.5	0.6	0.7	0.8	0.9	PIER 3	0.1	0.2	0.3	0.4	0.5	0.6	0.7	0.8	0.9	PIER 4	0.1	0.2	0.3	0.4	0.5	0.6	0.7	0.8	0.9	PIER 5	0.1	0.2
BEAM A	142.44	142.45	142.46	142.46	142.45	142.43	142.40	142.36	142.32	142.30	142.28	142.23	142.15	142.03	141.88	141.68	141.45	141.20	140.93	140.66	140.46	140.25	140.04	139.83	139.60	139.35	139.09	138.80	138.49	138.17	138.17	138.16	138.11	138.06
BEAM B	142.43	142.46	142.47	142.48	142.47	142.46	142.42	142.38	142.33	142.31	142.30	142.26	142.19	142.08	141.92	141.73	141.51	141.26	140.99	140.73	140.52	140.32	140.12	139.90	139.68	139.44	139.18	138.89	138.59	138.27	138.27	138.26	138.21	138.16
BEAM C	142.46	142.53	142.54	142.54	142.54	142.52	142.49	142.45	142.40	142.38	142.37	142.33	142.25	142.14	141.99	141.81	141.59	141.35	141.10	140.84	140.64	140.44	140.24	140.03	139.80	139.57	139.31	139.05	138.73	138.41	138.41	138.40	138.35	138.30
BEAM D	142.53	142.62	142.64	142.64	142.63	142.60	142.56	142.51	142.49	142.49	142.49	142.45	142.37	142.27	142.12	141.94	141.73	141.50	141.24	140.99	140.80	140.60	140.40	140.19	139.97	139.74	139.48	139.21	138.91	138.60	138.60	138.59	138.54	138.49
BEAM E	142.58	142.68	142.71	142.73	142.74	142.73	142.71	142.67	142.62	142.59	142.59	142.55	142.49	142.37	142.25	142.07	141.87	141.64	141.39	141.14	140.95	140.76	140.56	140.36	140.14	139.91	139.66	139.39	139.09	138.78	138.78	138.77	138.72	138.67
BEAM F	142.67	142.76	142.80	142.83	142.84	142.83	142.81	142.77	142.72	142.70	142.70	142.67	142.61	142.51	142.38	142.21	142.00	141.78	141.54	141.29	141.10	140.92	140.72	140.52	140.31	140.08	139.83	139.56	139.27	138.97	138.97	138.96	138.91	138.86
BEAM G	142.73	142.83	142.89	142.92	142.94	142.93	142.91	142.88	142.83	142.80	142.80	142.78	142.72	142.63	142.50	142.34	142.14	141.92	141.68	141.44	141.26	141.07	140.88	140.68	140.48	140.25	140.01	139.74	139.45	139.15	139.15	139.14	139.09	139.04
BEAM H	142.78	142.84	142.91	142.97	143.01	143.03	143.03	143.01	142.98	142.95	142.90	142.90	142.84	142.75	142.64	142.50	142.27	142.05	141.82	141.59	141.41	141.23	141.04	140.85	140.64	140.42	140.18	139.91	139.63	139.33	139.33	139.32	139.27	139.22
BEAM I	142.66	142.72	142.80	142.87	142.92	142.94	142.95	142.94	142.90	142.85	142.83	142.83	142.77	142.69	142.58	142.46	142.25	142.02	141.79	141.56	141.38	141.20	141.02	140.83	140.63	140.41	140.17	139.91	139.63	139.34	139.34	139.33	139.28	139.23
BEAM J	142.52	142.60	142.69	142.76	142.82	142.85	142.86	142.85	142.82	142.77	142.75	142.75	142.69	142.60	142.49	142.36	142.18	141.97	141.75	141.52	141.35	141.17	140.99	140.81	140.61	140.39	140.16	139.90	139.63	139.34	139.34	139.33	139.28	139.23
BEAM K	142.38	142.47	142.57	142.65	142.72	142.75	142.77	142.76	142.73	142.69	142.66	142.66	142.60	142.50	142.38	142.25	142.12	141.92	141.70	141.48	141.31	141.14	140.97	140.78	140.59	140.38	140.14	139.89	139.62	139.33	139.33	139.32	139.27	139.22
BEAM L	142.24	142.34	142.45	142.54	142.61	142.66	142.68	142.67	142.65	142.60	142.58	142.58	142.58	142.56	142.51	142.49	142.44	142.27	142.07	141.84	141.67	141.49	141.32	141.13	140.93	140.71	140.47	140.22	139.96	139.68	139.68	139.67	139.62	139.57
BEAM M	142.09	142.20	142.32	142.43	142.50	142.56	142.58	142.58	142.56	142.51	142.49	142.49	142.49	142.47	142.42	142.40	142.35	142.18	141.98	141.75	141.58	141.40	141.23	141.04	140.84	140.62	140.38	140.13	139.87	139.59	139.59	139.58	139.53	139.48
BEAM N	142.07	142.19	142.32	142.44	142.53	142.59	142.62	142.62	142.60	142.55	142.53	142.53	142.53	142.51	142.46	142.44	142.39	142.22	142.02	141.79	141.62	141.44	141.27	141.08	140.88	140.66	140.42	140.17	139.91	139.63	139.63	139.62	139.57	139.52

	BOTTOM OF SLAB ELEVATIONS																																
		SPAN 3									SPAN 3											SPAN 4										SPAN 4	
	PIER 3	0.3	0.4	0.5	0.6	0.7	0.8	0.9	PIER 4	0.1	0.2	0.3	0.4	0.5	0.6	0.7	0.8	0.9	PIER 5	0.1	0.2	0.3	0.4	0.5	0.6	0.7	0.8	0.9	PIER 6	0.1	0.2
BEAM A	142.30	142.32	142.34	142.36	142.37	142.38	142.38	142.38	142.38	142.38	142.38	142.38	142.38	142.38	142.38	142.38	142.38	142.38	142.38	142.38	142.38	142.38	142.38	142.38	142.38	142.38	142.38	142.38	142.38	142.38	142.38	142.38	142.38	142.38
BEAM B	142.31	142.33	142.35	142.37	142.38	142.39	142.39	142.39	142.39	142.39	142.39	142.39	142.39	142.39	142.39	142.39	142.39	142.39	142.39	142.39	142.39	142.39	142.39	142.39	142.39	142.39	142.39	142.39	142.39	142.39	142.39	142.39	142.39	142.39
BEAM C	142.38	142.40	142.42	142.43	142.44	142.45	142.45	142.45	142.45	142.45	142.45	142.45	142.45	142.45	142.45	142.45	142.45	142.45	142.45	142.45	142.45	142.45	142.45	142.45	142.45	142.45	142.45	142.45	142.45	142.45	142.45	142.45	142.45	142.45
BEAM D	142.49	142.51	142.53	142.54	142.55	142.56	142.56	142.56	142.56	142.56	142.56	142.56	142.56	142.56	142.56	142.56	142.56	142.56	142.56	142.56	142.56	142.56	142.56	142.56	142.56	142.56	142.56	142.56	142.56	142.56	142.56	142.56	142.56	142.56
BEAM E	142.59	142.61	142.63	142.64	142.65	142.66	142.66	142.66	142.66	142.66	142.66	142.66	142.66	142.66	142.66	142.66	142.66	142.66	142.66	142.66	142.66	142.66	142.66	142.66	142.66	142.66	142.66	142.66	142.66	142.66	142.66	142.66	142.66	142.66
BEAM F	142.70	142.72	142.74	142.75	142.76	142.77	142.77	142.77	142.77	142.77	142.77	142.77	142.77	142.77	142.77	142.77	142.77	142.77	142.77	142.77	142.77	142.77	142.77	142.77	142.77	142.77	142.77	142.77	142.77	142.77	142.77	142.77	142.77	142.77
BEAM G	142.80	142.82	142.84	142.85	142.86	142.87	142.87	142.87	142.87	142.87	142.87	142.87	142.87	142.87	142.87	142.87	142.87	142.87	142.87	142.87	142.87	142.87	142.87	142.87	142.87	142.87	142.87	142.87	142.87	142.87	142.87	142.87	142.87	142.87
BEAM H	142.90	142.92	142.94	142.95	142.96	142.97	142.97	142.97	142.97	142.97	142.97	142.97	142.97	142.97	142.97	142.97	142.97	142.97	142.97	142.97	142.97	142.97	142.97	142.97	142.97	142.97	142.97	142.97	142.97	142.97	142.97	142.97	142.97	142.97
BEAM I	142.99	143.01	143.03	143.04	143.05	143.06	143.06	143.06	143.06	143.06	143.06	143.06	143.06	143.06	143.06	143.06	143.06	143.06	143.06	143.06	143.06	143.06	143.06	143.06	143.06	143.06	143.06	143.06	143.06	143.06	143.06	143.06	143.06	143.06
BEAM J	143.08	143.10	143.12	143.13	143.14	143.15	143.15	143.15	143.15	143.15	143.15	143.15	143.15	143.15	143.15	143.15	143.15	143.15	143.15	143.15	143.15	143.15	143.15	143.15	143.15	143.15	143.15	143.15	143.15	143.15	143.15	143.15	143.15	143.15
BEAM K	143.17	143.19	143.21	143.22	143.23	143.24	143.24	143.24	143.24	143.24	143.24	143.24	143.24	143.24	143.24	143.24	143.24	143.24	143.24	143.24	143.24	143.24	143.24	143.24	143.24	143.24	143.24	143.24	143.24	143.24	143.24	143.24	143.24	143.24
BEAM L	143.26	143.28	143.30	143.31	143.32	143.33	143.33	143.33	143.33	143.33	143.33	143.33	143.33	143.33	143.33	143.33	143.33	143.33	143.33	143.33	143.33	143.33	143.33	143.33	143.33	143.33	143.33	143.33	143.33	143.33	143.33	143.33	143.33	143.33
BEAM M	143.38	143.40	143.42	143.43	143.44	143.45	143.45	143.45	143.45	143.45	143.45	143.45	143.45	143.45	143.45	143.45	143.45	143.45	143.45	143.45	143.45	143.45	143.45	143.45	143.45	143.45	143.45	143.45	143.45	143.45	143.45	143.45	143.45	143.45
BEAM N	143.53	143.55	143.57	143.58	143.59	143.60	143.60	143.60	143.60	143.60	143.60	143.60	143.60	143.60	143.60	143.60	143.60	143.60	143.60	143.60	143.60	143.60	143.60	143.60	143.60	143.60	143.60	143.60	143.60	143.60	143.60	143.60	143.60	143.60

	BOTTOM OF SLAB ELEVATIONS																																
		SPAN 4									SPAN 4											SPAN 5										SPAN 5	
	PIER 5	0.3	0.4	0.5	0.6	0.7	0.8	0.9	PIER 6	0.1	0.2	0.3	0.4	0.5	0.6	0.7	0.8	0.9	PIER 7	0.1	0.2	0.3	0.4	0.5	0.6	0.7	0.8	0.9	PIER 8	0.1	0.2
BEAM A	138.38	138.38	138.38	138.38	138.38	138.38	138.38	138.38	138.38	138.38	138.38	138.38	138.38	138.38	138.38	138.38	138.38	138.38	138.38	138.38	138.38	138.38	138.38	138.38	138.38	138.38	138.38	138.38	138.38	138.38	138.38	138.38	138.38	138.38
BEAM B	138.39	138.39	138.39	138.39	138.39	138.39	138.39	138.39	138.39	138.39	138.39	138.39	138.39	138.39	138.39	138.39	138.39	138.39	138.39	138.39	138.39	138.39	138.39	138.39	138.39	138.39	138.39	138.39	138.39	138.39	138.39	138.39	138.39	138.39
BEAM C	138.40	138.40	138.40	138.40	138.40	138.40	138.40	138.40	138.40	138.40	138.40	138.40	138.40	138.40	138.40	138.40	138.40	138.40	138.40	138.40	138.40	138.40	138.40	138.40	138.40	138.40	138.40	138.40	138.40	138.40	138.40	138.40	138.40	138.40
BEAM D	138.41	138.41	138.41	138.41	138.41	138.41	138.41	138.41	138.41	138.41	138.41	138.41	138.41	138.41	138.41	138.41	138.41	138.41	138.41	138.41	138.41	138.41	138.41	138.41	138.41	138.41	138.41	138.41	138.41	138.41	138.41	138.41	138.41	138.41
BEAM E	138.42	138.42	138.42	138.42	138.42	138.42	138.42	138.42	138.42	138.42	138.42	138.42	138.42	138.42	138.42	138.42	138.42	138.42	138.42	138.42	138.42	138.42	138.42	138.42	138.42	138.42	138.42	138.42	138.42	138.42	138.42	138.42	138.42	138.42
BEAM F	138.43	138.43	138.43	138.43	138.43	138.43	138.43	138.43	138.43	138.43	138.43	138.43	138.43	138.43	138.43	138.43	138.43	138.43	138.43	138.43	138.43	138.43	138.43	138.43	138.43	138.43	138.43	138.43	138.43	138.43	138.43	138.43	138.43	138.43
BEAM G	138.44	138.44	138.44	138.44	138.44	138.44	138.44	138.44	138.44	138.44	138.44	138.44	138.44	138.44	138.44	138.44	138.44	138.44	138.44	138.44	138.44	138.44	138.44	138.44	138.44	138.44	138.44	138.44	138.44	138.44	138.44	138.44	138.44	138.44
BEAM H	138.45	138.45	138.45	138.45	138.45	138.45	138.45	138.45	138.45	138.45	138.45	138.45	138.45	138.45	138.45	138.45	138.45	138.45	138.45	138.45	138.45	138.45	138.45	138.45	138.45	138.45	138.45	138.45	138.45	138.45	138.45	138.45	138.45	138.45
BEAM I	138.46	138.46	138.46	138.46	138.46	138.46	138.46	138.46	138.46	138.46	138.46	138.46	138.46	138.46	138.46	138.46	138.46	138.46	138.46	138.46	138.46	138.46	138.46	138.46	138.46	138.46	138.46	138.46	138.46	138.46	138.46	138.46	138.46	138.46
BEAM J	138.47	138.47	138.47	138.47	138.47	138.47	138.47	138.47	138.47	138.47	138.47	138.47	138.47	138.47	138.47	138.47	138.47	138.47	138.47	138.47	138.47	138.47	138.47	138.47	138.47	138.47	138.47	138.47	138.47	138.47	138.47	138.47	138.47	138.47
BEAM K	138.48	138.48	138.48	138.48	138.48	138.48	138.48	138.48	138.48	138.48	138.48	138.48	138.48	138.48	138.48	138.48	138.48	138.48	138.48	138.48	138.48	138.48	138.48	138.48	138.48	138.48	138.48	138.48	138.48	138.48	138.48	138.48	138.48	138.48
BEAM L	138.49	138.49	138.49	138.49	138.49	138.49	138.49	138.49	138.49	138.49	138.49	138.49	138.49	138.49	138.49	138.49	138.49	138.49	138.49	138.49	138.49	138.49	138.49	138.49	138.49	138.49	138.49	138.49	138.49	138.49	138.49	138.49	138.49	138.49
BEAM M	138.50	138.50	138.50	138.50	138.50	138.50	138.50	138.50	138.50	138.50	138.50	138.50	138.50	138.50	138.50	138.50	138.50	138.50	138.50	138.50	138.50	138.50	138.50	138.50	138.50	138.50	138.50	138.50	138.50	138.50	138.50	138.50	138.50	138.50
BEAM N	138.51	138.51	138.51	138.51	138.51	138.51	138.51	138.51	138.51	138.51	138.51	138.51	138.51	138.51	138.51	138.51	138.51	138.51	138.51	138.51	138.51	138.51	138.51	138.51	138.51	138.51	138.51	138.51	138.51	138.51	138.51	138.51	138.51	138.51

	SCREED ELEVATIONS																																
		SPAN 1									SPAN 1											SPAN 1										SPAN 2	
	ABUTMENT A	0.1	0.2	0.3	0.4	0.5	0.6	0.7	0.8	0.9	PIER 1	0.1	0.2	0.3	0.4	0.5	0.6	0.7	0.8	0.9	PIER 2	0.1	0.2	0.3	0.4	0.5	0.6	0.7	0.8	0.9	PIER 3	0.1	0.2
NORTH BARRIER LINE	140.41	140.71	140.99	141.24	141.47	141.67	141.85	142.01	142.15	142.29	142.42	142.56	142.70	142.83	142.95	143.05	143.12	143.17	143.20	143.20	143.19	143.19	143.20	143.21	143.21	143.20	143.18	143.15	143.11	143.06	143.04	143.04	143.02	142.96
NORTH CURB LINE	140.03	140.34	140.63	140.89	141.13	141.35	141.54	141.71	141.87	142.02	142.16	142.31	142.46	142.60	142.73	142.84	142.93	142.99	143.03	143.04	143.05	143.05	143.08	143.10	143.10	143.10	143.08	143.05	143.02	142.97	142.95	142.95	142.93	142.88
CONSTRUCTION CL	139.59	139.94	140.27	140.57	140.85	141.10	141.34	141.55	141.75	141.94	142.13	142.32	142.50	142.68	142.85	142.99	143.12	143.22	143.30	143.36	143.41	143.46	143.53	143.59	143.62	143.65	143.65	143.63	143.60	143.56	143.53	143.53	143.54	143.49
SOUTH CURB LINE	138.09	138.45	138.80	139.14	139.46	139.76	140.04	140.29	140.54	140.77	141.00	141.23	141.46	141.68	141.89	142.08	142.25	142.40	142.52	142.63	142.72	142.83	142.96	143.07	143.16	143.22	143.25	143.26	143.24	143.20	143.19	143.19	143.21	143.16

	SCREED ELEVATIONS																																
		SPAN 2									SPAN 2											SPAN 3										SPAN 3	
	PIER 2	0.3	0.4	0.5	0.6	0.7	0.8	0.9	PIER 3	0.1	0.2	0.3	0.4	0.5	0.6	0.7	0.8	0.9	PIER 4	0.1	0.2	0.3	0.4	0.5	0.6	0.7	0.8	0.9	PIER 5	0.1	0.2
NORTH BARRIER LINE	143.19	143.20	143.21	143.21	143.20	143.18	143.15	143.11	143.06	143.04	143.02	142.96	142.88	142.76	142.60	142.41	142.18	141.93	141.67	141.40	141.20	140.99	140.78	140.56	140.33	140.08	139.81	139.53	139.22	138.90	138.90	138.89	138.84	138.79
NORTH CURB LINE	143.05	143.08	143.10	143.10	143.10	143.08	143.05	143.02	142.97	142.95	142.93	142.88	142.80	142.69	142.54	142.35	142.14	141.90	141.64	141.38	141.18	140.98	140.77	140.56	140.33	140.09	139.83	139.55	139.25	138.93	138.93	138.92	138.87	138.82
CONSTRUCTION CL	142.72	142.75	142.77	142.76	142.73	142.69	142.66	142.63	142.60	142.59	143.53	143.50	143.45	143.36	143.23	143.08	142.89	142.68	142.45	142.22	142.04	141.85	141.67	141.47	141.26	141.04	140.80	140.54	140.26	139.97	139.97	139.96	139.91	139.86
SOUTH CURB LINE	142.39	142.42	142.44	142.43	142.41	142.37	142.34	142.31	142.28	142.27	143.19	143.21	143.21	143.18	143.12	143.02	142.89	142.73	142.55	142.35	142.14	141.98	141.83	141.66	141.49	141.30	141.10	140.88	140.64	140.38	140.10	140.09	140.04	139.99

| | SCREED ELEVATIONS | | | | | | | | | | | | | | | | | | | | | | | | | | | | | | | | |
|---|---|---|---|---|---|---|---|---|---|---|---|---

BAR.	DIMENSIONS								NO. REQ'D	TOTAL WT.
	a	b	c	d	e	f	g	h		

BAR	DIMENSIONS								NO. REQ'D	TOTAL WT.
	a	b	c	d	e	f	g	h		

BAR	DIMENSIONS								NO. REQ'D	TOTAL WT.
	a	b	c	d	e	f	g	h		

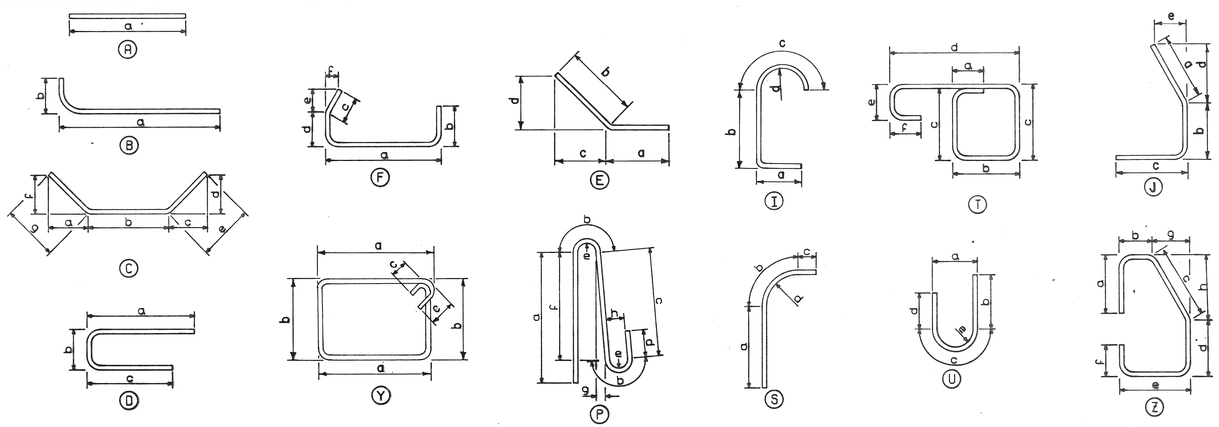

NOTES:

ALL BENDS IN REINFORCING STEEL TO BE MADE ABOUT A PIN OF THE MINIMUM DIAMETER ALLOWED BY THE STANDARD SPECIFICATION.

TOLERANCES IN CUTTING AND BENDING BARS ARE AS ESTABLISHED IN MANUAL OF STANDARD PRACTICE OF THE REINFORCING STEEL INSTITUTE AND DETAILING MANUAL OF THE AMERICAN CONCRETE INSTITUTE.

WHERE FIELD CUTTING OF EPOXY BARS IS REQUIRED, THE CONTRACTOR SHALL REPAIR THE EPOXY COATING AT THE CUT END AS PROVIDED FOR IN STANDARD SPECIFICATION 8.05.05 (INCIDENTAL TO STEEL REINFORCEMENT EPOXY COATED).

REINFORCEMENT SHALL BE BUNDLED AND TAGGED AS TO THE LOCATION AS SHOWN ON THIS SHEET.

WHERE A DIMENSION OF A BAR IS NOT SHOWN ON THE PLANS, OR CANNOT BE DETERMINED FROM THE DETAILED DIMENSIONS, THE DIMENSION SHALL BE THE STANDARD BEND LENGTH.

THE CONTRACTOR SHALL SUBMIT ORIGINAL SHOP DRAWINGS FOR FABRICATION, BENDING AND PLACEMENT OF CONCRETE REINFORCEMENT. THE SHOP DRAWINGS SHALL COMPLY WITH ACI 315-80 "DETAILS AND DETAILING OF CONCRETE REINFORCEMENT" AND ACI 315R-80 "MANUAL OF ENGINEERING AND PLACING DRAWINGS FOR REINFORCED CONCRETE STRUCTURES" SHOWING BAR SCHEDULES, STIRRUP SPACING, DIAGRAMS OF BENT BARS, ARRANGEMENT, SPACING AND BAR MARKS OF CONCRETE REINFORCEMENT.

BAR NUMBERS:

EPOXY COATED
BAR SHAPE
BAR SIZE
BAR LENGTH (FT)
BAR LENGTH (IN)

EA062906

WORK THIS SHEET WITH SHEET NO. S-14 THRU S-46.

MACK AVENUE OVER CONRAIL

STEEL REINFORCEMENT DETAILS

REVISIONS

NO.	DESCRIPTION	DATE	BY

SQUAD BOSS			
DRAWN BY			
TRACED BY			
CHECKED BY			

SHEET S-50 OF 117

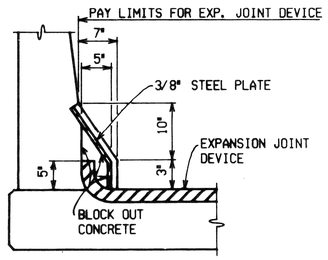

90° CROSSING

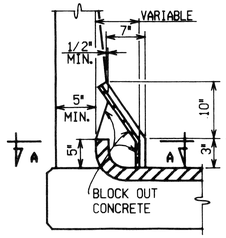

SKEWED CROSSING

ELEVATION AT BARRIER RAILING

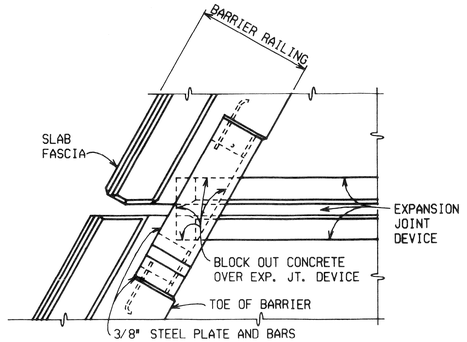

PLAN AT BARRIER RAILING

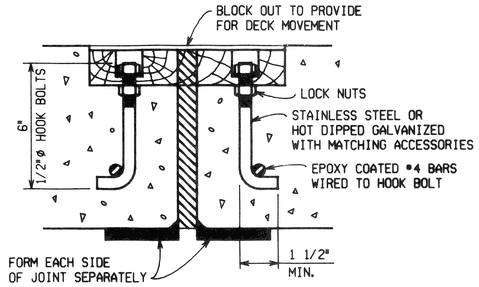

DETAIL FOR ANCHORAGE CAST IN PLACE

MANUFACTURER IS TO FURNISH BOLTS, NUTS, WASHERS, #4 BARS, AND TIES.

COVER PLATE BARRIER TREATMENT

ALL STEEL COMPONENTS ARE TO BE HOT DIPPED GALVANIZED

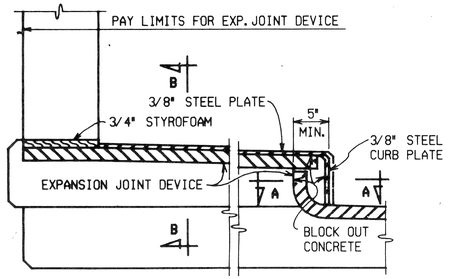

ELEVATION AT PARAPET RAILING

(APPLICABLE TO SIDEWALKS AND BRUSH BLOCKS)

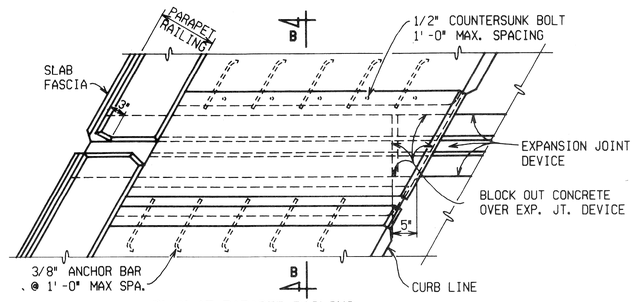

PLAN AT PARAPET RAILING

(SIDEWALK SHOWN, BRUSH BLOCK SIMILAR)

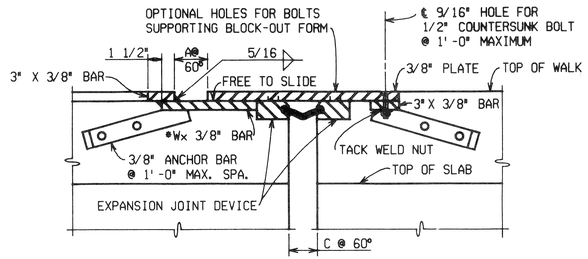

SECTION B-B

*W= 2A + 1 1/2"

A= TOTAL TRAVEL / 2 + 1/2"

C= SEE MANUFACTURER'S DETAILS FOR DEVICE USED

COVER PLATE SIDEWALK TREATMENT

ALL STEEL COMPONENTS ARE TO BE HOT DIPPED GALVANIZED

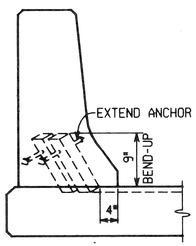

1. BLOCK OUT CONCRETE IN BARRIER.
2. INSTALL DEVICE.
3. FILL RECESS WITH CONCRETE FLUSH WITH BARRIER FACE.

SECTION C-C

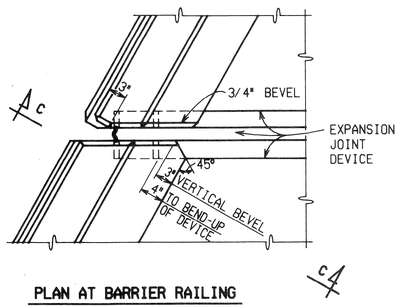

PLAN AT BARRIER RAILING

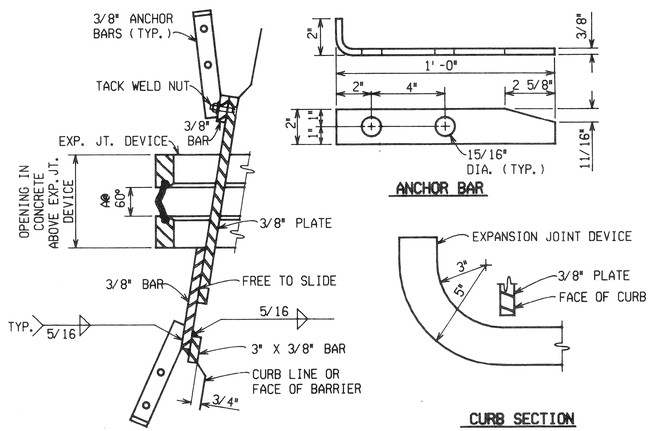

SECTION A-A

(FREE SIDE TO BE POSITIONED IN DIRECTION OF TRAFFIC)

ANCHOR BAR

CURB SECTION

ALTERNATE BARRIER TREATMENT

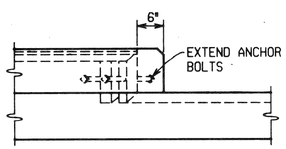

SECTION D-D

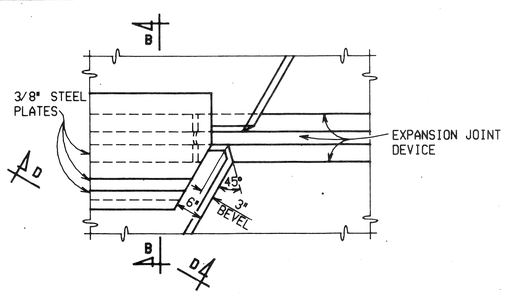

PLAN AT SIDEWALK CURB

ALTERNATE SIDEWALK CURB TREATMENT

ANGLE OF CROSSING TO NEAREST 10°	LOCATION OF JOINT	MIN. TOT. TRAVEL ALONG CENTERLINE OF BRIDGE	REQUIRED LENGTH OF EXPANSION JOINT DEVICE
50°	Abut A	1¼"	114.5'
50°	Pier 2	0	114.5'
60°	Pier 3	3¾"	93'
60°	Abut B	1⅛"	93'

NOTES:

JOINT TYPES

THE EXPANSION JOINT DEVICE SHALL BE OF A TYPE THAT INCLUDES A CONTINUOUS NEOPRENE (OR EQUIVALENT) SEAL ACROSS THE DECK. UNLESS OTHERWISE NOTED ON THE PLANS, THE CONTRACTOR HAS THE OPTION OF USING ANY OF THE DEVICES LISTED BELOW:

DEVICE	MANUFACTURER
WATSON-BOWMAN STRIP SEAL, ELASTOFLEX	WATSON-BOWMAN & ACME, INC.
ONFLEX (ELASTOMERIC SIDE PANELS)	STRUCTURAL ACCESSORIES, INC.
PRO-SPAN, FEL-SPAN CS AND MULTIFOLD	FEL-PRO, INC.
GEN-STRIP	GENERAL TIRE
STEELFLEX-RS	D. S. BROWN

THE MODEL OF THE JOINT TYPE SELECTED SHALL BE SUITABLE TO ACCOMMODATE THE TOTAL MOVEMENT NOTED ON THE PLANS.

COMPLETE WORKING DRAWINGS OF ALL DETAILS OF FABRICATION OF THE EXPANSION JOINT DEVICE SHALL BE SUBMITTED FOR REVIEW IN ACCORDANCE WITH STANDARD SPECIFICATION 1.05.02. THIS REQUIREMENT IS WAIVED FOR EXPANSION JOINT DEVICES FOR WHICH A SET OF STANDARD INSTALLATION DETAILS HAS BEEN APPROVED. STANDARD INSTALLATION DETAILS CAN BE OBTAINED FROM THE DESIGN DIVISION.

FABRICATION AND INSTALLATION

THE EXPANSION JOINT SHALL BE SHOP FABRICATED TO CONFORM TO THE CONTOUR OF THE BRIDGE DECK, BARRIERS, ETC. IT SHALL BE INSTALLED IN ACCORDANCE WITH MANUFACTURER'S RECOMMENDATIONS SUBJECT TO NOTES HEREIN AND THE APPROVAL OF THE ENGINEER.

THE PRO-SPAN DEVICE MUST INCORPORATE A CAST-IN-PLACE METAL SEAT.

WHERE THE DEVICE IS TO BE INSTALLED ON CAST CONCRETE, THE SURFACE LAITANCE SHALL BE REMOVED BY SANDBLASTING AND ANY VOIDS FILLED WITH EPOXY MORTAR PRIOR TO BEDDING.

THE AREA OF THE HOLD-DOWN DEVICE AND SEALING GLAND WHICH WILL BE IN CONTACT WITH A SEALANT, BEDDING COMPOUND, OR LUBRICANT-ADHESIVE SHALL BE CLEANED WITH TOLUENE OR OTHER APPROVED SOLVENT.

A BEDDING COMPOUND SHALL BE USED BETWEEN THE SEAT AND THE ANCHORED PORTION OF THE SEALING GLAND, OR BETWEEN THE SEAT AND HOLD-DOWN DEVICE. THE BEDDING COMPOUND SHALL BE AN APPROVED EPOXY GROUT FURNISHED BY THE MANUFACTURER OF THE EXPANSION JOINT DEVICE.

WHERE THE SEALING GLAND IS LOCKED INTO A METAL EXTRUSION, A LUBRICANT-ADHESIVE CONFORMING TO STANDARD SPECIFICATION 8.16.04-d SHALL BE REQUIRED BETWEEN THE SEAL AND METAL EXTRUSION.

ALL CONTINUOUS BOLT WELL CAVITIES IN THE HOLD-DOWN DEVICES SHALL BE FILLED WITH AN EPOXY MORTAR. ALL NON-CONTINUOUS BOLT WELL CAVITIES SHALL BE FILLED WITH AN APPROVED FLEXIBLE EPOXY OR A SEALANT CONFORMING TO FEDERAL SPECIFICATION TT-S-00230C.

THE VOID FORMED BETWEEN THE VERTICAL EDGE OF THE HOLD-DOWN DEVICE AND THE BLOCK-OUT SHALL BE FILLED WITH A SEALANT IF LESS THAN 1/2 INCH IN WIDTH OR WITH AN EPOXY MORTAR IF GREATER THAN 1/2 INCH. THE SEALANT SHALL CONFORM TO FEDERAL SPECIFICATION TT-S-00230C OR SHALL BE AN APPROVED FLEXIBLE EPOXY.

THE EPOXY MORTAR USED TO REPAIR THE SEAT, TO FILL THE CONTINUOUS BOLT WELL CAVITIES, AND TO FILL THE VOID BETWEEN THE EDGE OF THE HOLD-DOWN DEVICE AND THE BLOCK-OUT SHALL BE MIXED AND PLACED IN ACCORDANCE WITH STANDARD SPECIFICATION 4.50.19-a, EXCEPT THE SAND SHALL BE LIMITED TO A MAXIMUM OF 2.5 PARTS, USING AN EPOXY BINDER MEETING THE REQUIREMENTS SPECIFIED IN STANDARD SPECIFICATION 8.16.05. ALL SURFACES IN CONTACT WITH THE EPOXY MORTAR SHALL BE LIGHTLY SANDBLASTED AND PRIMED WITH THE BINDER PRIOR TO PLACING THE MORTAR.

DETAILS AT CURBS OR BARRIERS

THE DETAILS ON THIS SHEET SHOW AN APPROVED MEANS OF TERMINATING THE EXPANSION JOINT DEVICE AT CURBS OR BARRIERS. VARIATIONS OR ALTERNATIVE SCHEMES WILL BE CONSIDERED AND MAY BE USED IF APPROVED BY THE ENGINEER.

MICHIGAN DEPARTMENT OF TRANSPORTATION

EXPANSION JOINT DETAILS

SQUAD BOSS		
DRAWN BY	ADU/	1-17-85/
CHECKED BY	LOC/	12-16-85/

SHEET 53/ OF 117

T-

LEGEND

UNDERGROUND PLAN

- EXISTING DIRECT BURIAL OR PARKWAY CABLE
- ABANDON DIRECT BURIAL OR PARKWAY CABLE
- INSTALL DIRECT BURIAL OR PARKWAY CABLE (NO. & SIZE AS INDICATED)
- 2-3" D.B. INSTALL SCHEDULE 80 DIRECT BURIAL CONDUIT. (2-3" SHOWN)
- EXISTING SINGLE P.L.D DUCT RUN
- 4-3" EXISTING P.L.D. DUCT RUN (4-3" SHOWN)
- 2-3" ABANDON EXISTING P.L.D. DUCT RUN (2-3" SHOWN)
- 4-4" BUILD ENCASED CONDUIT (4-4" SHOWN)
- 9-4" BUILD REINFORCED CONDUIT (9-4" SHOWN)
- EXISTING P.L.D. HANDHOLE
- M.H. 1234 EXISTING P.L.D. MANHOLE
- BUILD ROUND HANDHOLE
- BUILD TYPE "D" HANDHOLE
- M.H. 7890 BUILD NEW MANHOLE (2-WAY)
- M.H. 1234 BUILD NEW MANHOLE (3-WAY)
- M.H. 5678 BUILD NEW MANHOLE (CORNER)
- M.H. 9012 BUILD NEW MANHOLE (4-WAY)
- BUILD TRAFFIC SIGNAL CONTROLLER FOUNDATION
- BUILD T.S. MAST ARM STANDARD FOUNDATION
- BUILD T.S. PEDESTAL FOUNDATION
- BUILD STEEL STRAIN POLE FOUNDATION
- EXISTING FIRE OR POLICE CALL BOX
- INSTALL NEW FIRE OR POLICE CALL BOX (EXCEPT AS OTHERWISE INDICATED)
- INSTALL SALVAGED FIRE OR POLICE CALL BOX (EXCEPT AS OTHERWISE INDICATED)
- INSTALL MULT. ST. LTG. CONTROL CABINET ON NEW FDN.
- EXISTING U.G.-FED ST. LTG. UNIT
- EXISTING U.G.-FED ST. LTG. UNIT WITH DBL. ARM
- FUTURE U.G.-FED ST. LTG. UNIT
- (F) ST. LTG. STD. IS MISSING. REMOVE FOUNDATION ONLY. REMOVE U.G.-FED ST. LTG. UNIT & FOUNDATION. (EXCEPT AS OTHERWISE NOTED)
- INSTALL SALVAGED U.G.-FED ST. LTG. UNIT ON NEW FDN.
- "T" INDICATES TRAFFIC SIGNAL CONTACT ON ST. LTG. STD.
- REMOVE U.G FED ST. LTG. UNIT & FDN. BUILD ROUND HANDHOLE IN SAME LOCATION TO ACCOMMODATE NEW & EXIST CONDUITS.
- INSTALL CODE 118-06 ANCHOR BASE ST. LTG. STD. & 400W. TYPE III SODIUM VAPOR LUMINAIRE ON NEW FDN. (240V.)
- INSTALL CODE 118-06 ANCHOR BASE ST. LTG. STD. & 250W. TYPE III SODIUM VAPOR LUMINAIRE ON NEW FDN. (240V.)
- REMOVE U.G.-FED ST. LTG. UNIT. INSTALL CODE 118-06 ANCHOR BASE ST. LTG. STD. & 250W. TYPE III SODIUM VAPOR LUMINAIRE ON MODIFIED FDN. (240V.)
- INSTALL CODE 010-06 ANCHOR BASE ST. LTG. STD. & 150W. TYPE II SODIUM VAPOR LUMINAIRE ON NEW FDN. (240V.)
- INSTALL CODE 010-06 ANCHOR BASE ST. LTG. STD. & 400W. TYPE III SODIUM VAPOR LUMINAIRE ON RETAINING WALL (240V.)
- INSTALL CODE 010-06 ANCHOR BASE ST. LTG. STD. & 400W. TYPE III SODIUM VAPOR LUMINAIRE ON RETAINING WALL (240V.) INDICATES SHAFT HANDHOLE ON SAME SIDE AS ARM
- BUILD 6" SEWER (LIGHTING)

OVERHEAD PLAN

- E EXISTING WOOD POLE (D.E. CO. POLE SHOWN)
- C REMOVE WOOD POLE (P.L.D. POLE SHOWN)
- REPLACE WOOD POLE (HEIGHT & CLASS AS INDICATED)
- INSTALL 35FT. CLASS 4 WOOD POLE (EXCEPT WHERE OTHERWISE NOTED) (USE SALVAGED POLE WHERE INDICATED)
- EXISTING OVERHEAD ST. LTG. UNIT
- REMOVE OVERHEAD ST. LTG. UNIT
- **INSTALL O.H. ST. LTG. UNIT WITH 10FT. BRACKET & 400 W. TYPE III MERCURY VAPOR LUMINAIRE W. SERIES COIL**
- INSTALL NEW 100 W. MERCURY VAPOR LUMINAIRE FOR ALLEY LTG. WITH NEW SERIES COIL & NEW 6 FT. BRACKET ARM. (USE SALVAGED UNIT WHERE INDICATED)
- INDICATES 2-WAY — INSTALL NEW 250 W. MERCURY VAPOR LUMINAIRE, TYPE I, (2-WAY OR 4-WAY AS SHOWN) FOR RESIDENTIAL LTG. WITH NEW SERIES COIL & NEW 10FT. BRACKET ARM (EXCEPT WHERE OTHERWISE NOTED) (USE SALVAGED UNIT WHERE INDICATED)
- STA.-24 (2-#6) EXISTING OVERHEAD LINE (2-#6 OF STANTON-24 SHOWN)
- 3-#2 (STA.-662) REMOVE OVERHEAD LINE (3-#2 OF STANTON-662 SHOWN)
- 2-#6 (STA.-24) INSTALL OVERHEAD LINE (2-#6 OF STANTON-24 SHOWN)
- 3-#6 (MULT.) INSTALL & LATER REMOVE OVERHEAD LINE (3-#6 MULT. SHOWN)
- 3/8" INSTALL GUY & ANCHOR (3/8" GUY SHOWN)
- REMOVE GUY & ANCHOR
- 3/8" P INSTALL POLE GUY (3/8" GUY SHOWN)
- 3/8" A INSTALL ARM GUY (3/8" GUY AS SHOWN)
- P OR A REMOVE GUY (TYPE AS INDICATED)
- IN. MATERIAL TO BE INSTALLED
- RM. MATERIAL TO BE REMOVED
- M.S.S. MAKE WOOD POLE SELF-SUPPORTING IN CRUSHED STONE
- XYZ PHASES OF P.L.D. DISTRIBUTION WIRES OR EQUIPMENT
- E D.E. CO. DISTRIBUTION WIRE
- es D.E. CO. SECONDARY WIRE
- C.P CABLE POLE
- (C) INSTALL SUSPENSION INSULATOR
- EXISTING → C, PROPOSED → C P.L.D. DISTRIBUTION WIRE
- EXISTING → CS, PROPOSED → CS P.L.D. SECONDARY WIRE
- EXISTING → A, PROPOSED → A P.L.D SERIES ST. LTG. WIRE
- EXISTING → M, PROPOSED → M P.L.D. MULTIPLE STREET LIGHTING WIRE

GENERAL

- PROPERTY LINE
- EXISTING FACE OF CURB WHEN NEW STREET CONST.
- PROPOSED FACE OF CURB WHEN NEW STREET CONST. OR EXISTING FACE OF CURB WHEN NO STREET CONST.
- FUTURE PAVEMENT
- (S) S SEWER LINE, MANHOLE & CATCH BASIN
- (E) E DETROIT EDISON COMPANY U.G. LINE & MANHOLE
- (T) T MICH. BELL TEL COMPANY U.G. LINE & MANHOLE
- (W) W WATERMAIN & GATEWELL
- (G) G MICH. CONSOLIDATED GAS CO. U.G. LINE & WELL
- (OTHER UTILITIES SHOWN SIMILAR)

DIAGRAMS & CONDUIT ALLOCATION

(U.G.-FED STD. SYMBOLS SAME AS UNDERGROUND LEGEND OF THIS SHEET.)

- M.H. 1234 PROPOSED MANHOLE
- M.H. 5678 EXISTING MANHOLE
- H.H. PROPOSED HANDHOLE
- H.H. EXISTING HANDHOLE
- PROPOSED ROUND HANDHOLE
- M.H. 1234 PROPOSED MANHOLE IN SAME LOCATION AS EXIST. HOLE
- INSTALL U.G. CABLE OR O.H. WIRE AS NOTED
- EXISTING U.G. CABLE OR O.H. WIRE AS NOTED
- U.G. CABLE TO BE ABANDONED
- U.G. CABLE OR O.H. WIRE TO BE REMOVED AS NOTED
- (1) SECTION OF PROP. CONDUIT WITH PROP. CABLE
- (X) SECTION OF EXISTING CONDUIT WITH EXISTING CABLE
- (1/X) SECTION OF EXISTING CONDUIT WITH EXIST. AND PROP. CABLE
- 1-3" CONDUIT BROKEN OUT IN HANDHOLE
- 3-3" CONDUIT BY-PASSING HANDHOLE
- 4-3"

LEGEND

- MULT. ST. LTG CABLE — 1
- COMMUNICATION CABLE — 2
- PRI. DISTRBUTION CABLE — 7
- 24 KV. TRANSMISSION CABLE — 8
- FUTURE CABLE — A
- SUPERVISORY CABLE — 11
- MULT. ST. LTG. CONTROL CABLE — 10
- MULT. ST. LTG. FEEDER CABLE — 9
- SERIES ST. LTG. CABLE. — 6

- DISCONNECT, INSULATE AND CAP CABLE END
- SPLICE STRAIGHT THRU
- SPLICES
- 1-#8 INDICATES 7500V., 1-1/C #8 L.C. ST. LTG. CABLE
- 2#8 INDICATES 7500V., 2-1/C #8 L.C. ST. LTG. CABLES
- 2/1 INDICATES 2000V., 2-1/C #2/0 ST. LTG. CABLES & 1-#2/0 NEUTRAL
- 2/1 INDICATES 2000V., 2-1/C #2 ST. LTG. CABLES & 1-#2 NEUTRAL (ALL UNLABELED CABLE GROUPS ON WIRING DIAGRAMS ARE SUCH)
- 1#2 INDICATES 2000V., 1-1/C #2 ST. LTG. CABLE
- 1/1 INDICATES 2000V., 1-1/C #2 ST. LTG. CABLE & 1-#2 NEUTRAL
- 3/1 INDICATES 2000V., 3-1/C #2 ST. LTG. CABLES & 1-#2 NEUTRAL
- (3) INDICATES GENERAL PLAN NO. OF AREA (APPLIES TO U.G. CABLE ITEMS ONLY)
- POR. 301 A1-1 / POR. 24-26 INDICATES NEW ST. LTG. STANDARD NUMBER / INDICATES OLD ST. LTG. STANDARD NUMBER

SPECIAL NOTE

CONTRACTOR TO SALVAGE & RETURN TO P.L.D ALL REMOVED MATERIALS IN RE-USABLE CONDITION.

TRAFFIC SIGNAL PLAN

- INSTALL 3-SECTION TRAFFIC SIGNAL (1-WAY SHOWN)
- INSTALL 3-SECTION TRAFFIC SIGNAL WITH SALVAGED HEADS (2-WAY SHOWN)
- REMOVE 3-SECTION TRAFFIC SIGNAL (3-WAY SHOWN)
- EXISTING 3-SECTION TRAFFIC SIGNAL (4-WAY SHOWN)
- INSTALL 2-SECTION PEDESTRIAN (WALK-DON'T WALK) TRAFFIC SIGNAL (2-WAY SHOWN)
- INSTALL 2-SECTION PEDESTRIAN (WALK-DON'T WALK) TRAFFIC SIGNAL WITH SALVAGED HEAD (1-WAY SHOWN)
- REMOVE 2-SECTION PEDESTRIAN (WALK-DON'T WALK) TRAFFIC SIGNAL (1-WAY SHOWN)
- EXISTING 2-SECTION PEDESTRIAN (WALK-DON'T WALK) TRAFFIC SIGNAL (1-WAY SHOWN)
- INSTALL JUNCTION BOX
- INSTALL SALVAGED JUNCTION BOX
- REMOVE JUNCTION BOX
- EXISTING JUNCTION BOX
- INSTALL OVERHEAD PLASTIC JACKETED CABLE
- EXISTING OVERHEAD PLASTIC JACKETED CABLE
- REMOVE OVERHEAD PLASTIC JACKETED CABLE
- INSTALL TRAFFIC SIGNAL CONTROLLER (NEW OR SALVAGED AS INDICATED) ON NEW FDN.
- INSTALL CANTILEVER TYPE TRAFFIC SIGNAL MAST ARM STANDARD & MAST ARM ON NEW FOUNDATION. (EXCEPT AS OTHERWISE INDICATED)
- INSTALL 8 FT. TRAFFIC SIGNAL PEDESTAL ON NEW FOUNDATION (EXCEPT AS OTHERWISE INDICATED)
- INSTALL STEEL STRAIN POLE ON NEW FDN.
- EXISTING TRAFFIC SIGNAL CONTROLLER
- EXISTING MAST ARM STANDARD
- EXISTING PEDESTAL
- EXISTING STEEL STRAIN POLE
- BACK-OUT LAMPS & HOOD SIGNALS (INCIDENTAL TO INSTALLATION OF T.S. ON THIS CONTRACT).
- REMOVE HOOD & INSTALL LAMPS (INCIDENTAL TO INSTALLATION OF T.S. ON THIS CONTRACT).
- POCH POLE CONTACT HEIGHT OF T.S. SPAN WIRE
- L.C.H. LOW CONTACT HEIGHT OF SPAN WIRE T.S TO SPAN WIRE
- (2) INDICATES TYPE OF SIDEWALK RAMP TO BE CONSTRUCTED.

PLAN INDEX

DRWG. NO.	SUB-TITLE
1	LEGEND
2	GENERAL INFORMATION
3 THRU 5	GENERAL PLAN
6 AND 7	MULT. & SERIES ST. LTG. WIRING DIAGRAM
8	MISC. WIRING DIAGRAMS
9	**TEMPORARY O.H. LTG.**
10	**T.S. REMOVAL**
11 AND 12	**QUANTITY SHEET**
13 – 40	**DETAILS**

DATE	DESCRIPTION	CHKD. BY

JEFFERSON/CONNER INDUSTRIAL REVITALIZATION PROJECT

MACK AVENUE LIGHTING

LEGEND

DRAWN CEA | CHECKED | APPROVED | DATE AUG. 87

PLAN PREPARED BY
CONSULTING ENGINEERING ASSOCIATES INC.
ENGINEERING CONSULTANTS
16580 WYOMING DETROIT, MICH. 48221

DRWG. NO. 1 OF 40 | FILE NO. CEA 1137

CHECKED BY | APPROVED BY

PUBLIC LIGHTING DEPARTMENT
CITY OF DETROIT

FILE NO. 51-0606 | SHEET NO. 78 OF 117 | DATE AUG. 87

GENERAL INFORMATION SHEET

1. CALL MISS DIG (647-7344) 48HRS. PRIOR TO ANY EXCAVATION FOR THE LOCATIONS OF UNDERGROUND UTILITIES.
2. WHERE ABANDONING OF U.G. CABLES IS CALLED FOR ON PLANS OR DIAGRAMS, CONTRACTOR SHALL CUT & REMOVE CABLES WITHIN MANHOLES & HANDHOLES.
3. WHERE INSTALLATION OF NEW MANHOLES OVER EXISTING CONDUITS (TO ACCOMMODATE NEW & EXISTING CONDUITS) IS CALLED FOR ON PLANS, CONTRACTOR SHALL CAREFULLY & SO AS NOT TO DAMAGE EXIST. CABLES, REMOVE THE EXISTING CONDUITS & ENCASEMENT WITHIN MANHOLES. EXIST. CABLES SHALL BE EXTENDED & PROPERLY TRAINED, RACKED & SUPPORTED.
4. ALL EXISTING STREET LIGHTING, TRAFFIC SIGNAL, PRIMARY, TRANSMISSION ETC. CIRCUITS SHALL ALWAYS BE MAINTAINED IN AN OPERATIONAL CONDITION (EXCEPT WHERE OTHERWISE NOTED).
5. ALL CONDUITS NOT TERMINATING IN STRUCTURES SUCH AS MANHOLES, HANDHOLES OR FOUNDATIONS SHALL EXTEND 2FT. BEYOND PAVEMENT LIMIT (EXCEPT AS OTHERWISE INDICATED). ALL UNOCCUPIED CONDUITS SHALL BE PLUGGED.
6. ALL TREE TRIMMING REQUIRED TO CLEAR NEW OR SALVAGED ST. LTG. & TRAFFIC SIGNAL STD.'S AND O.H. ST. LTG. & TRAFFIC SIGNAL UNITS SHALL BE INCIDENTAL TO THE PAY ITEM & NO EXTRA PAYMENT SHALL BE MADE.
7. EXISTING O.H. & T.S. FACILITIES ARE NOT NECESSARILY SHOWN ON PLANS.
8. ALL OVERHEAD WIRES & UNDERGROUND CABLES SHALL CONSIST OF COPPER CONDUCTORS AS PER SPECIFICATIONS.
9. NEW CONDUITS BROKEN INTO EXISTING MANHOLES OR HANDHOLES SHALL NOT INTERFERE WITH RACKING AND/OR TRAINING OF CABLES.
10. ALL NEW ANCHOR GUYS SHALL BE INSTALLED ON A 1:1 RATIO OR AS NEARLY AS POSSIBLE (EXCEPT WHERE OTHERWISE NOTED). (STRUT GUYS ARE EXCEPTED).
11. ALL CABLES SHALL BE TAGGED IN ALL MANHOLES & HANDHOLES.
12. INSTALL WOOD POLES SO AS NOT TO INTERFERE WITH TRAFFIC OR FUTURE CONSTRUCTION STAGES.
13. ALL SALVAGED WOOD POLES SHALL BE POLES PREVIOUSLY INSTALLED NEW ON THIS CONTRACT.
14. CONTRACTOR SHALL NOTIFY SYSTEM OPERATING DIVISION OF THE P.L.D. 48HRS. IN ADVANCE OF ANY WORK ON UNDERGROUND OR OVERHEAD TRANSMISSION, DISTRIBUTION AND ST. LTG. CIRCUITS. (PHONE 224-0500)
15. ALL LUMINAIRES SHALL BE PROVIDED WITH 240 V. INTERNAL BALLASTS AS CALLED FOR ON PLANS.
16. FOR LOCATIONS OF P.L.D. INSTALLATIONS ON STRUCTURES SUCH AS CONDUITS, HANDHOLES, CONDUIT SLEEVES, GALVANIZED STEEL CONDUITS & ST. LTG. STD. ANCHOR BOLTS SEE STRUCTURE PLANS.
17. PAVEMENT, SIDEWALK, CURB REMOVAL, REPLACEMENT AND EXCAVATION & BACKFILL SHALL BE DONE ACCORDING TO CITY OF DETROIT SPECIFICATIONS.
18. ALL TRAFFIC STREET SIGNS SUCH AS "NO PARKING", "NO STANDING" ETC., SHALL BE TRANSFERRED FROM OLD STD. OR POLE TO NEW STD. OR POLE AT SAME LOCATION OR IN CLOSE PROXIMITY BY DEPT. OF TRANSPORTATION.
19. ALL TRAFFIC SIGNALS SHALL BE MOUNTED WITH NEW STANDARD TRAFFIC SIGNAL BRACKETS & FITTINGS.
20. ALL TRAFFIC SIGNAL ITEMS, AS CALLED FOR ON PLANS, SHALL INCLUDE AS INCIDENTAL TO THE TRAFFIC SIGNAL ALL CABLES FROM THE CONTROLLER TO THE TRAFFIC SIGNALS & FOUNDATIONS AS INDICATED.
21. WHEN ENTERING PROPOSED CONDUIT INTO EXISTING MANHOLES & HANDHOLES EXERCISE CAUTION NOT TO DISTURB EXISTING CABLES.
22. ALL SALVAGED TRAFFIC SIGNALS SHALL BE TRAFFIC SIGNALS PREVIOUSLY INSTALLED NEW ON THIS CONTRACT. (EXCEPT AS OTHERWISE INDICATED).
23. FOR TRAFFIC SIGNAL SPAN WIRE USE 3/8" SIEMENS-MARTIN GRADE AS PER SPECIFICATIONS.
24. CROSSARMS SHALL BE REMOVED AFTER ALL CONTACTS ARE REMOVED. (INCIDENTAL TO REMOVAL OF OVERHEAD LINES)
25. SEAL-END OF CABLE WHERE COILING OF CABLE IS CALLED FOR ON PLANS. (CONTRACTOR SHALL RECEIVE PAYMENT FOR COILED-UP CABLES).
26. CONTRACTOR SHALL DELIVER WHERE REQUIRED TO THE PUBLIC LIGHTING DEPARTMENT THE T.S. CONTROLLER FOR TIMING. CONTRACTOR SHALL PICK-UP CONTROLLER FROM P.L.D. WHEN READY FOR INSTALLATION.
27. PROPOSED T.S. SHALL BE PUT INTO OPERATION AT TIME OF REMOVAL OF EXISTING T.S. FACILITIES. CONTRACTOR SHALL NOTIFY THE P.L.D. INSPECTOR IF HE UNABLE TO MAINTAIN T.S. IN AN OPERABLE CONDITION AT ALL TIMES.
28. A MINIMUM CLEARANCE OF 3'-6" HORIZONTAL & 1'-0" VERTICAL MUST BE MAINTAINED BETWEEN PROPOSED P.L.D. FACILITIES & EXISTING U.G. WATER FACILITIES.
29. CONTRACTOR TO NOTIFY MICH. CONS. GAS CO. AT 923-4370 IF PROTECTIVE COATED GAS MAIN IS EXPOSED OR DAMAGED.
30. CONTRACTOR TO NOTIFY D.E.CO., MR. J. TYSON AT 237-9564 IF PROTECTIVE COATING OF ANY D.E.CO. HIGH VOLTAGE UNDERGROUND LINE IS EXPOSED OR DAMAGED
31. ALL NEW U.G.-FED ST. LTG. UNITS SHALL BE INSTALLED 2'-6" BACK OF CURB UNLESS OTHERWISE INDICATED ON PLANS.
32. ALL NEW, SALVAGED & CONVERTED STEEL ST. LTG. STD.'S SHALL BE PAINTED.
33. SIDEWALK RAMPS OF THE TYPE & LOCATION AS SHOWN ON THE PLANS OR AS DIRECTED BY THE ENGINEER SHALL BE CONTRUCTED.
34. D.S.R. STREETCAR RAILS AND FOUNDATIONS (TRACKS) ARE SHOWN ON THE PLANS IN ACCORDANCE WITH THE BEST AVAILABLE INFORMATION. EXACT LOCATIONS WITHIN THE STREETS & INTERSECTIONS ARE NOT KNOWN. SOME RAILS MAY BE REMOVED.
35. UNDERGROUND CABLE QUANTITIES ARE ITEMIZED ON GENERAL PLANS. ALL CABLES SHALL BE TAGGED IN ALL M.H.'S & H.H.'S. THIS INCLUDES EXIST. CABLES THAT ARE CONVERTED TO MULTIPLE, RECONNECTED TO OTHER CIRCUITS OR RENDERED DEAD.
36. THE CANDLEPOWER DISTRIBUTION FOR ALL MERCURY VAPOR & SODIUM VAPOR ST. LTG. LUMINAIRES SHALL BE SEMI-CUTOFF, MEDIUM DISTRIBUTION OF TYPE AS INDICATED ON THE PLANS.
37. ALL NEW & SALVAGED ST. LTG. STD.'S. INSTALLED ON THIS CONTRACT AND EXIST. ST. LTG. STD.'S CONVERTED OR RE-CONNECTED TO OTHER CIRCUITS SHALL BE STENCILLED OR RE-STENCILLED AS SHOWN ON PLANS. (STENCILLING & RE-STENCILLING OF ST. LTG. STD.'S IS INCIDENTAL TO ST. LTG. STD.)
38. WHERE TRIMMING OF TREES ON CITY PROPERTY IS CALLED FOR ON PLANS THE CONTRACTOR SHALL OBTAIN A PERMIT FROM THE RECREATION DEPT. OF THE CITY OF DETROIT AND SHALL HAVE SUCH WORK DONE BY A LICENSED TREE SERVICE CONTRACTOR CALL MR. CRAIG GRANT AT 931-3950.
39. WHERE U.G. UTILITIES INTERFERE WITH THE INSTALLATION OF A NEW FOUNDATION, INSTALL THE SPECIAL FOUNDATION OF PARTICULAR DIMENSIONS AS INDICATED ON THE DETAIL DRWG. TO SUIT THE FIELD CONDITION. THERE WILL BE NO EXTRA PAYMENT FOR THE SPECIAL FOUNDATION. IT WILL BE PAID FOR AS A NORMAL FOUNDATION.
40. BAND INSULATED CLEVIS TO ST. LTG. STD. SHAFT. BRING U.G. CABLES THRU TOP OF SHAFT WITH WEATHERCAP TO FIT SHAFT OPENING. STORE SHAFT CAP IN BASE OF STANDARD. CONNECTION OF O.H. WIRES TO U.G. CABLES SHALL BE MADE OUTSIDE OF SHAFT. (INCIDENTAL TO INSTALLATION OF O.H. WIRES).
41. BAND SEC. RACK TO ST. LTG. STD. SHAFT. BRING U.G. CABLES THRU TOP OF SHAFT WITH WEATHERCAP TO FIT SHAFT OPENING. STORE SHAFT CAP IN BASE OF STD. CONNECTION OF O.H. WIRES TO U.G. CABLES SHALL BE MADE OUTSIDE OF SHAFT. (INCIDENTAL TO INSTALLATION OF O.H. WIRES)
42. REMOVE WEATHERCAP & INSULATED CLEVIS OR SEC. RACK FROM ST. LTG. STD. SHAFT. MOUNT SHAFT CAP ON ST. LTG. STD. (INCIDENTAL TO REMOVAL OF O.H. WIRES)
43. ALL TRANSFORMER POLES AND CABLE POLES SHALL BE FITTED UP WITH 120" ARMS. (EXCEPT WHERE OTHERWISE INDICATED).
44. INSTALLATION OF ARMS FOR EQUIPMENT, CUTOUTS, POTHEADS, TRANSFORMERS, ETC. ARE NOT SHOWN ON NEW CABLE AND TRANSFORMER POLES. THEY SHALL BE INSTALLED AS PER THE DETAIL DRWG. REQUIREMENT AND SHALL BE INCIDENTAL TO THE FITTING-UP OF THE CABLE AND/OR TRANSFORMER POLE.
45. ALL POTHEADS ON PRIMARY DISTRIBUTION CABLE POLES SHALL BE FLAT DIVERGENT DISCONNECTING TYPE.
46. WHERE A P.L.D. WOOD POLE WITH OTHER UTILITY CONTACTS IS TO BE REMOVED THE P.L.D. INSPECTOR WILL INDICATE IF THE POLE IS IN FACT TO BE REMOVED.
47. WHERE REMOVAL OF LUMINAIRES IS CALLED FOR ON PLANS THE ASSOCIATED O.H. SERIES COIL SHALL BE REMOVED BY THE CONTRACTOR. (REMOVE O.H. COIL IS INCIDENTAL TO REMOVE LUMINAIRE).

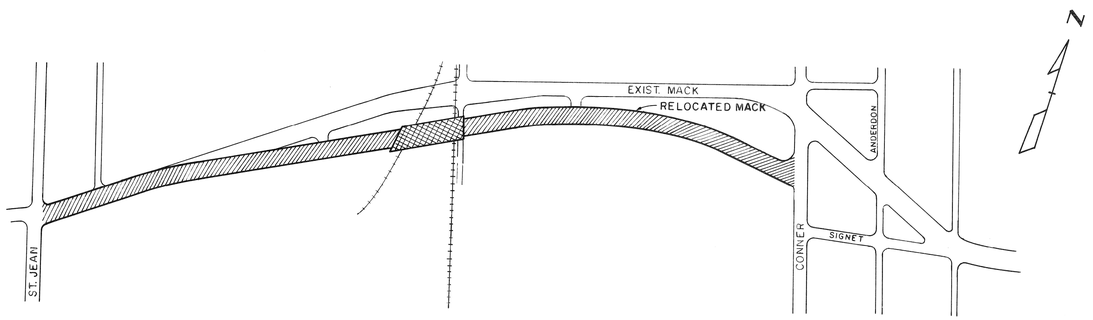

AREA MAP
N.T.S.

SPECIAL NOTE:

EXIST. UG. SERIES ST. LTG. CABLES (DIRECT BURIED OR IN CONDUIT) SHALL BE MAINTAINED IN AN OPERATING CONDITION UNTIL NEW MULTIPLE FED ST. LTG. STD'S. ARE INSTALLED & OPERATIONAL. TEMPORARY SERIES SPLICES TO MAINTAIN EXIST. SERIES CIRCUITS SHALL BE THE RESPONSIBILITY OF THE CONTRACTOR & ARE INCIDENTAL TO REMOVAL OF U.G.-FED ST. LTG. UNITS.

LIST OF MATERIAL	
ITEM	QUANTITIES
CONDUIT REPAIR-UNDER PAVEMENT	3 EACH
CONDUIT REPAIR-UNDER SIDEWALK OR DIRT	3 EACH
REMOVING STREETCAR RAIL AND FOUNDATION	250 LIN.FT.

NOTE:
THE ITEMS AND QUANTITIES LISTED ABOVE SHALL APPLY TO ALL LOCATIONS DIRECTED BY ENGINEER.

REVISIONS	DATE	DESCRIPTION	CHKD. BY

JEFFERSON/CONNER INDUSTRIAL REVITALIZATION PROJECT
MACK AVENUE LIGHTING
GENERAL INFORMATION & AREA MAP

DRAWN: CEA
CHECKED:
APPROVED: SM
DATE: AUG. 87

PLAN PREPARED BY
CONSULTING ENGINEERING ASSOCIATES INC.
ENGINEERING CONSULTANTS
16580 WYOMING DETROIT, MICH. 48221
DRWG. NO. 2 OF 40
FILE NO. CEA 1137

CHECKED BY
APPROVED BY

PUBLIC LIGHTING DEPARTMENT
CITY OF DETROIT

FILE NO. 51-0606
SHEET NO. 79 OF 117
DATE AUG. 87

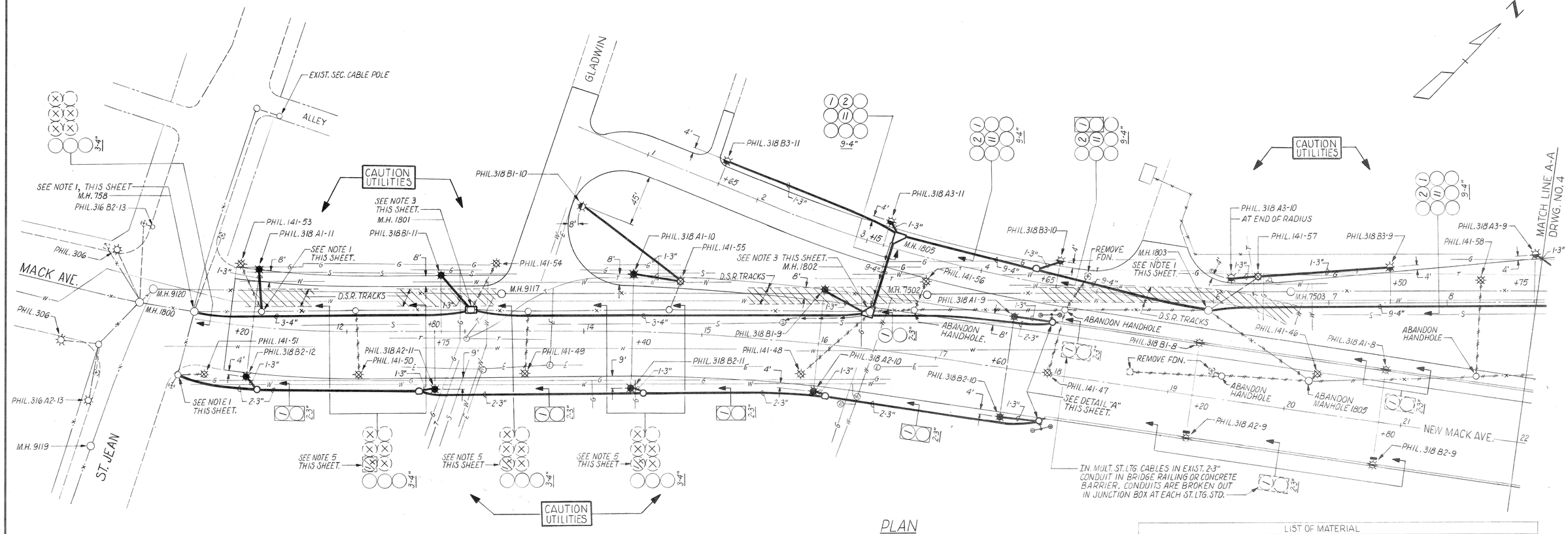

PLAN
SCALE: 1"=40'

NOTES:

1. BREAK NEW CONDUIT(S) INTO EXIST. HANDHOLE OR MANHOLE AS SHOWN. CAUTION - LIVE CABLES !
2. BUILD HANDHOLE OR MANHOLE OVER EXIST. CONDUIT(S) TO ACCOMMODATE NEW & EXIST. CONDUITS. CAUTION - LIVE CABLES !
3. REMOVE EXISTING MANHOLE. BUILD NEW MANHOLE IN SAME LOCATION TO ACCOMMODATE NEW & EXIST. CONDUITS. CAUTION - LIVE CABLES !
4. REMOVE EXISTING HANDHOLE. BUILD NEW MANHOLE IN SAME LOCATION TO ACCOMMODATE NEW & EXIST. CONDUITS. CAUTION - LIVE CABLES !
5. REMOVE 2-1/C #8 L.C. ST. LTG. CABLES AS SHOWN ON WIRING DIAGRAM. INSTALL NEW MULT. ST. LTG. CABLES IN SAME CONDUIT.

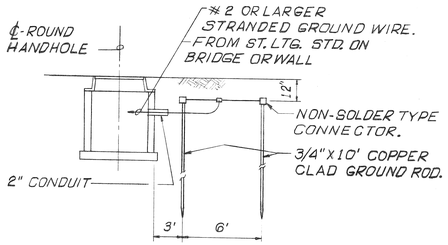

DETAIL "A"
INSTALLATION OF GROUND RODS AT END OF BRIDGE OR WALL.
N.T.S.
ALL WORK & MATERIALS SHOWN ARE INCIDENTAL TO INSTALLATION OF MULT. ST. LTG. CABLES.

LIST OF MATERIAL	
ITEM	QUANTITIES
1-3" ENCASED CONDUIT	690 LIN.FT.
2-3" ENCASED CONDUIT	870 LIN.FT.
9-4" ENCASED CONDUIT	600 LIN.FT.
ROUND HANDHOLE	6 EACH
TYPE "D" HANDHOLE	3 EACH
TWO-WAY MANHOLE	1 EACH
CORNER MANHOLE	2 EACH
ABANDON HANDHOLE	4 EACH
ABANDON MANHOLE	1 EACH
REMOVE MANHOLE	2 EACH
REMOVE U.G.-FED ST. LTG. UNIT	12 EACH
REMOVE FOUNDATION	15 EACH
CODE 010-06 ST. LTG. STD.	11 EACH
CODE 118-06 ST. LTG. STD.	10 EACH
CODE 010-06 ST. LTG. STD. FOUNDATION	7 EACH
CODE 118-06 ST. LTG. STD. FOUNDATION	10 EACH
150 W. TYPE II SODIUM VAPOR LUMINAIRE (240V.)	7 EACH
400 W. TYPE III SODIUM VAPOR LUMINAIRE (240V.)	14 EACH
REMOVE 1-2/C #14 L.C. CABLE	800 LIN.FT.
REMOVE 1-7/C #14 L.C. CABLE	580 LIN.FT.
REMOVE 2-1/C #8 L.C. ST. LTG. CABLES	680 LIN.FT.
2 KV. 1-1/C #2 ST. LTG. CABLE & 1-#2 NEUTRAL	605 LIN.FT.
2 KV. 2-1/C #2 ST. LTG. CABLES & 1-#2 NEUTRAL	2865 LIN.FT.
2 KV. 4-1/C #2 ST. LTG. CABLES & 1-#2 NEUTRAL	75 LIN.FT.
SUPERVISORY CABLE, 19 GA., PLASTIC JACKETED, 12 PR.	640 LIN.FT.
COMMUNICATION CABLE, 19 GA., PLASTIC JACKETED, 18 PR.	640 LIN.FT.
3-4" ENCASED CONDUIT	560 LIN.FT.
6" SEWER (LIGHTING)	120 LIN.FT.

REVISIONS	DATE	DESCRIPTION	CHKD. BY

JEFFERSON/CONNER INDUSTRIAL REVITALIZATION PROJECT
MACK AVENUE LIGHTING
GENERAL PLAN

DRAWN CEA
CHECKED
APPROVED SM
DATE AUG. 87

PLAN PREPARED BY
CONSULTING ENGINEERING ASSOCIATES INC.
ENGINEERING CONSULTANTS
16580 WYOMING DETROIT, MICH. 48221
DRWG. NO. 3 OF 40
FILE NO. CEA 1137

CHECKED BY
APPROVED BY

PUBLIC LIGHTING DEPARTMENT
CITY OF DETROIT

FILE NO. 51-0606
SHEET NO. 80 OF 117
DATE AUG. 87

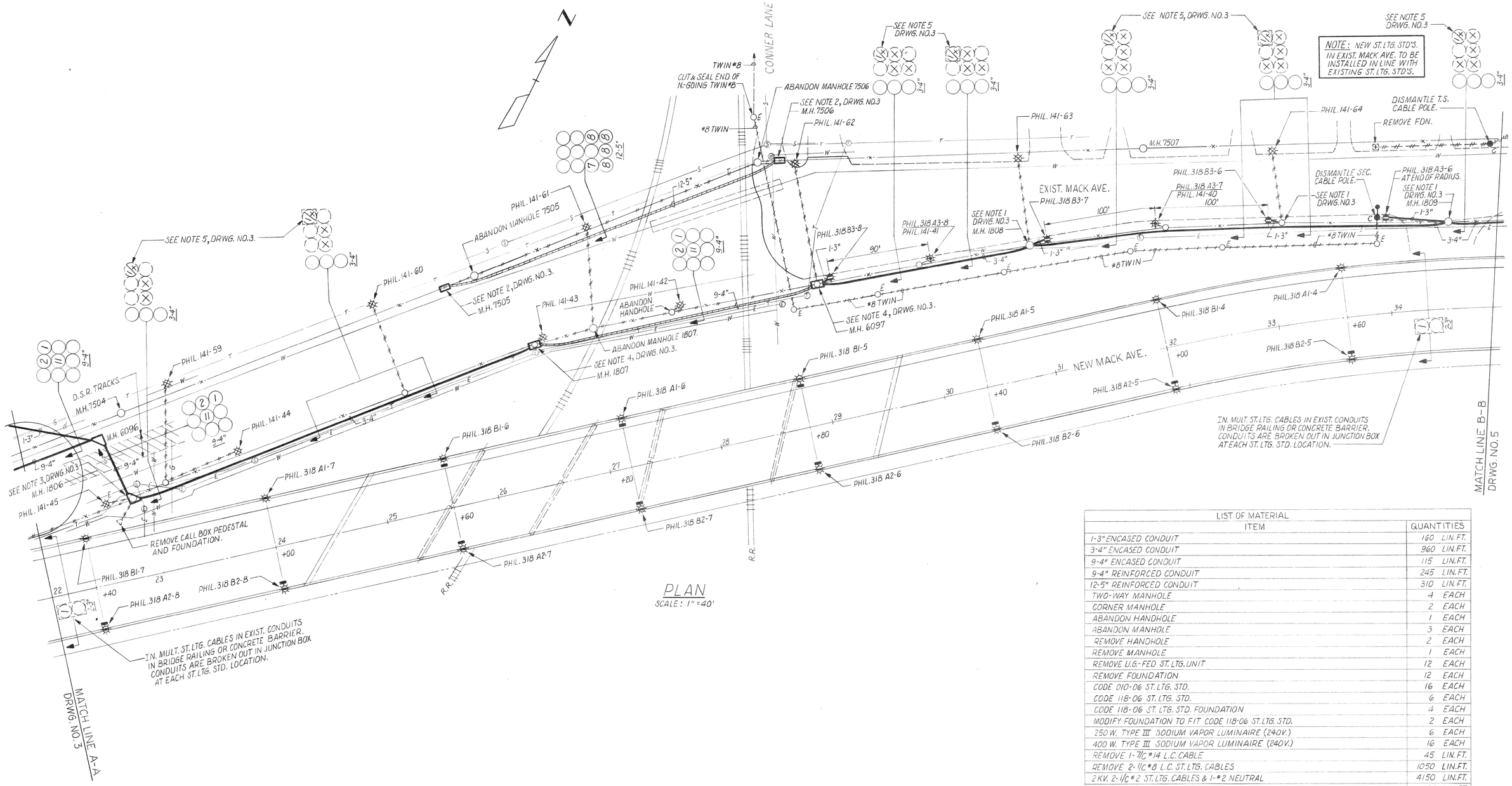

PLAN
SCALE: 1" = 40'

LIST OF MATERIAL	
ITEM	QUANTITIES
1-3" ENCASED CONDUIT	160 LIN.FT.
3-4" ENCASED CONDUIT	960 LIN.FT.
9-4" ENCASED CONDUIT	115 LIN.FT.
9-4" REINFORCED CONDUIT	245 LIN.FT.
12-5" REINFORCED CONDUIT	310 LIN.FT.
TWO-WAY MANHOLE	4 EACH
CORNER MANHOLE	2 EACH
ABANDON HANDHOLE	1 EACH
ABANDON MANHOLE	3 EACH
REMOVE HANDHOLE	2 EACH
REMOVE MANHOLE	1 EACH
REMOVE U.G.-FED ST. LTG. UNIT	12 EACH
REMOVE FOUNDATION	12 EACH
CODE 010-06 ST. LTG. STD.	16 EACH
CODE 118-06 ST. LTG. STD.	6 EACH
CODE 118-06 ST. LTG. STD. FOUNDATION	4 EACH
MODIFY FOUNDATION TO FIT CODE 118-06 ST. LTG. STD.	2 EACH
250 W. TYPE III SODIUM VAPOR LUMINAIRE (240V.)	6 EACH
400 W. TYPE III SODIUM VAPOR LUMINAIRE (240V.)	16 EACH
REMOVE 1-7/C #14 L.C. CABLE	45 LIN.FT.
REMOVE 2-1/C #8 L.C. ST. LTG. CABLES	1050 LIN.FT.
2 KV. 2-1/C #2 ST. LTG. CABLES & 1-#2 NEUTRAL	4150 LIN.FT.
SUPERVISORY CABLE, 19 GA., PLASTIC JACKETED, 12 PR.	400 LIN.FT.
COMMUNICATION CABLE, 19 GA., PLASTIC JACKETED, 18 PR.	400 LIN.FT.
7000 V. 1-3/C 350 MCM P.I.L.C.P.J. DISTRIBUTION CABLE	345 LIN.FT.
24 KV. 1-3/C 350 MCM P.I.L.C.P.J. TRANSMISSION CABLE	1380 LIN.FT.
REMOVE #8 TWIN	715 LIN.FT.
REMOVE WOOD POLE	2 EACH
REMOVE O.H. ST. LTG. UNIT	1 EACH
DISMANTLE T.S. CABLE POLE	1 EACH
DISMANTLE SECONDARY CABLE POLE	1 EACH
REMOVE CALL BOX PEDESTAL	1 EACH

REVISIONS	DATE	DESCRIPTION	CHKD. BY

JEFFERSON/CONNER INDUSTRIAL REVITALIZATION PROJECT

MACK AVENUE LIGHTING

GENERAL PLAN

DRAWN CEA	PLAN PREPARED BY		PUBLIC LIGHTING DEPARTMENT
CHECKED	CONSULTING ENGINEERING ASSOCIATES INC.	CHECKED BY	
APPROVED	ENGINEERING CONSULTANTS		CITY OF DETROIT
DATE AUG. 87	16580 WYOMING DETROIT, MICH. 48221	APPROVED BY	
	DRWG. NO. 4 OF 40 FILE NO. CEA 1137		

FILE NO. 51-0606
SHEET NO. 81 OF 117
DATE AUG. 87

MATCH LINE B-B
DRWG. NO.4

NOTE: NEW ST. LTG. STD'S. IN EXIST. MACK AVE. TO BE INSTALLED IN LINE WITH EXISTING ST. LTG. STD'S.

PHIL. 141-65 · PHIL. 141-66 · PHIL. 141-67 · PHIL. 141-68 · PHIL. 141-69 · PHIL. 141
M.H. 7508 · M.H. 8778 · M.H. 7509 · M.H. 7510
EXIST. SEC. CABLE POLE.
SEC. (2-#6)
CONNER AVE.
PECK AVE.
EXIST. MACK AVE.
100'
SEE NOTE 1 DRWG. NO.3.
PHIL. 318 B3-5 · PHIL. 141-39 · PHIL. 318 A3-5 · PHIL. 318 B3-4 · PHIL. 318 A3-4 · PHIL. 318 B3-3 · PHIL. 318 B3-2 · PHIL. 141-36 · PHIL. 318 A3-3 · PHIL. 318 A3-2 · PHIL. 318 B3-1 · PHIL. 318 A3-1 · PHIL. 141-35 · PHIL. 141-33
65' · 25' · 95' · 95' · 95' · 35' · 60'
M.H. 1810 · M.H. 1811 · M.H. 1812
LOCATE HANDHOLE
PHIL. 141-38
SEE NOTE 5 DRWG. NO.3.
PHIL. 318 B1-3 · PHIL. 318 A1-3 · PHIL. 318 B1-2 · PHIL. 318 A1-2 · PHIL. 318 B1-1 · PHIL. 318 A1-1
SEE DETAIL "A" DRWG. NO.3
CONNECT 2-3" TO EXIST. CONDUIT BENDS AT END OF RETAINING WALL.
PHIL. 318 A2-4 · PHIL. 318 B2-4 · PHIL. 318 A2-3 · PHIL. 318 B2-3 · PHIL. 318 A2-2 · PHIL. 318 B2-2 · PHIL. 318 A2-1 · PHIL. 318 B2-1
SEE DETAIL "A" DRWG. NO.3.
NEW MACK AVE.
IN. MULT. ST. LTG. CABLES IN EXIST. CONDUITS IN BRIDGE RAILING OR CONCRETE BARRIER. CONDUITS ARE BROKEN OUT IN JUNCTION BOX AT EACH ST. LTG. STD. LOCATION.
IN. 3'-6" BACK OF EX. CURB
MAKE BURIED SPLICE
PHIL. 114-97
PHIL. 114-96
STUB-OUT 9-4"
PHIL. 114-67
M.H. 6098
MULT. ST. LTG. CONTROL CABINET (PHIL. 318)
PHIL. 114-98 · PHIL. 114-99 · PHIL. 114-66 · PHIL. 114-100
M.H. 7511
ANDERDON
MATCH LINE C-C THIS SHEET
PHIL. 623 (3-#2/0) 45 FT. CL. 2 IN. N. OF EXIST. SEE DETAIL "B", THIS SHEET.
ALLEY
REQUEST M.B.T. TO TRANSFER CONTACTS.
REQUEST D.E.CO. TO TRANSFER CONTACTS, PURCHASE NEW POLE, & RM EXIST. POLE.
PHIL. 623 (3-#2/0) SAG 2-TIMES NORMAL.
EXIST. PRI. DISTRIBUTION LOOP CABLE POLE.
M.H. 9098
D.S.R. TRACKS
PHIL. 114-102
SEE NOTE 1, DRWG. NO.3.
MATCH LINE C-C THIS SHEET
FUTURE CURB
FUTURE MACK AVE.
PHIL. 114-68
PHIL. 114-65
M.H. 6738
M.H. 6813 · M.H. 5084
SIGNET

LIST OF MATERIAL

ITEM	QUANTITIES
1-3" ENCASED CONDUIT	320 LIN. FT.
2-3" ENCASED CONDUIT	1085 LIN. FT.
4-3" ENCASED CONDUIT	180 LIN. FT.
5-3" ENCASED CONDUIT	45 LIN. FT.
2-4" ENCASED CONDUIT	630 LIN. FT.
3-4" ENCASED CONDUIT	915 LIN. FT.
4-4" ENCASED CONDUIT	70 LIN. FT.
ROUND HANDHOLE	6 EACH
TYPE "D" HANDHOLE	8 EACH
FOUR-WAY MANHOLE	1 EACH
REMOVE U.G.-FED ST. LTG. UNIT	7 EACH
REMOVE FOUNDATION	7 EACH
CODE 010-06 ST. LTG. STD.	5 EACH
CODE 118-06 ST. LTG. STD.	19 EACH
CODE 118-06 ST. LTG. STD. FOUNDATION	17 EACH
MODIFY FOUNDATION TO FIT CODE 118-06 ST. LTG. STD.	2 EACH
250 W. TYPE III SODIUM VAPOR LUMINAIRE (240V.)	10 EACH
400 W. TYPE III SODIUM VAPOR LUMINAIRE (240V.)	14 EACH
MULT. ST. LTG. CONTROL CABINET	1 EACH
MULT. ST. LTG. CONTROL CABINET FOUNDATION	1 EACH
45 FT. CLASS 2 WOOD POLE	1 EACH
FIT-UP WOOD POLE AS A COMB. MULT. ST. LTG. TRANSF. POLE & MULT. ST. LTG. & SEC. CABLE POLE.	1 EACH
REMOVE 1-7/C #14 L.C. CABLE	1030 LIN. FT.
REMOVE 2-1/C #8 L.C. ST. LTG. CABLES	900 LIN. FT.
2 KV. 2-1/C #6 SECONDARY CABLES	230 LIN. FT.
2 KV. 2-1/C #2 ST. LTG. CABLES & 1-#2 NEUTRAL	3870 LIN. FT.
2 KV. 2-1/C #2/0 ST. LTG. CABLES & 1-#2/0 NEUTRAL	700 LIN. FT.
7500 V. 2-1/C #8 L.C. ST. LTG. CABLES	40 LIN. FT.

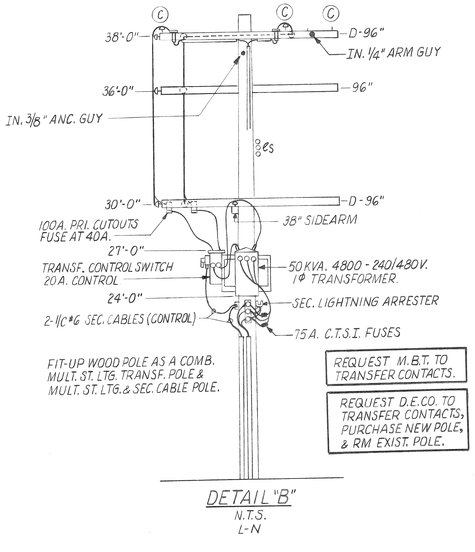

DETAIL "B"
N.T.S.
L-N

REVISIONS	DATE	DESCRIPTION	CHKD. BY

JEFFERSON/CONNER INDUSTRIAL REVITALIZATION PROJECT
MACK AVENUE LIGHTING
GENERAL PLAN

DRAWN CEA
CHECKED
APPROVED
DATE AUG. 87

PLAN PREPARED BY
CONSULTING ENGINEERING ASSOCIATES INC.
ENGINEERING CONSULTANTS
16580 WYOMING DETROIT, MICH. 48221
DRWG. NO. 5 OF 40
FILE NO. CEA 1137

CHECKED BY
APPROVED BY

PUBLIC LIGHTING DEPARTMENT
CITY OF DETROIT

FILE NO. 51-0606
SHEET NO. 82 OF 117
DATE AUG. 87

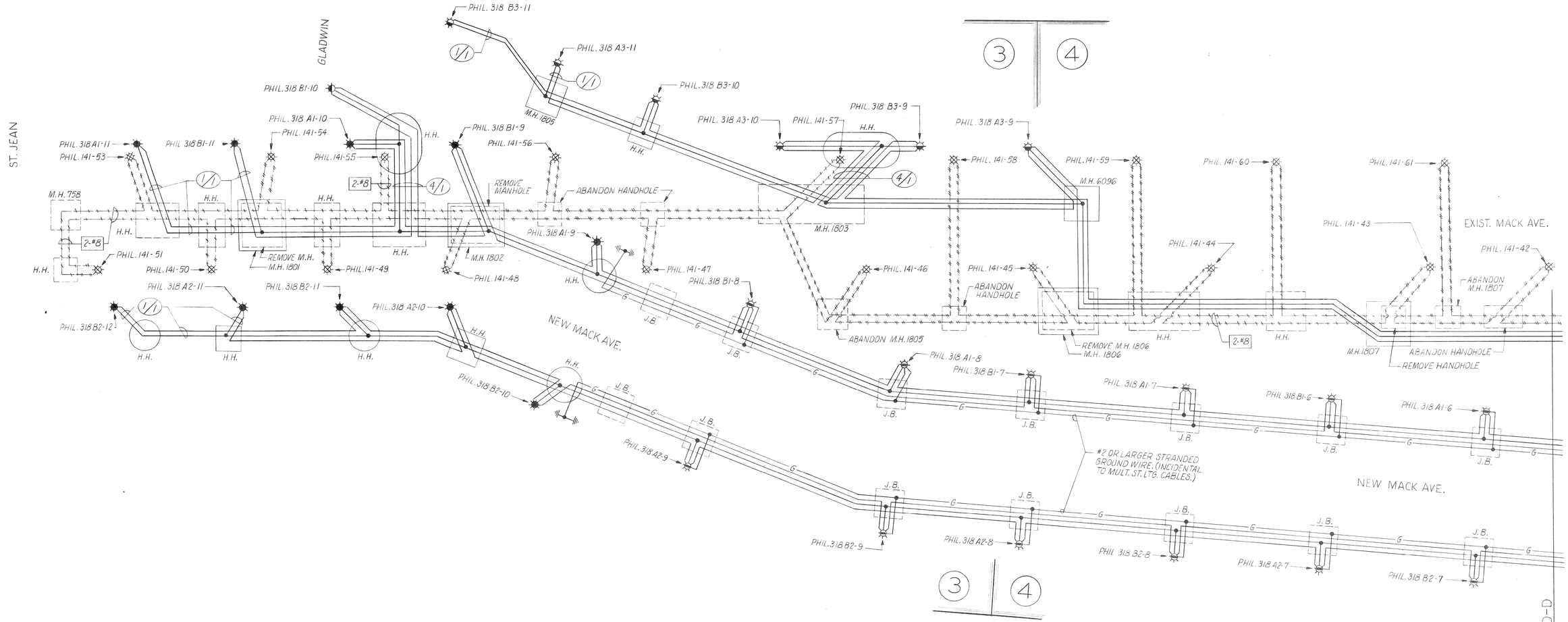

MULT. ST. LTG. WIRING DIAGRAM 240/480V.
AND SERIES ST. LTG. WIRING DIAGRAM

MATCH LINE D-D
DRWG. NO. 7

REVISIONS	DATE	DESCRIPTION	CHKD. BY

JEFFERSON-CONNER INDUSTRIAL REVITALIZATION PROJECT

MACK AVE. LIGHTING

MULT. & SERIES ST. LTG. WIRING DIAGRAM

DRAWN	CEA
CHECKED	
APPROVED	
DATE	AUG. 87

PLAN PREPARED BY
CONSULTING ENGINEERING ASSOCIATES INC.
ENGINEERING CONSULTANTS
16580 WYOMING DETROIT, MICH. 48221

DRWG. NO.	6 OF 40
FILE NO.	CEA 1137

CHECKED BY

APPROVED BY

PUBLIC LIGHTING DEPARTMENT

CITY OF DETROIT

FILE NO.	51-0606
SHEET NO.	83 OF 117
DATE	AUG. 87

4 5

MATCH LINE D-D
DRWG. NO. 6

PHIL. 141-62
PHIL. 141-63
PHIL. 141-64
PHIL. 141-65
PHIL. 141-66
PHIL. 141-67
PHIL. 141-68
PHIL. 141
PHIL. 141-69
CONNER AVE.
PHIL. 141-33
EXIST. MACK AVE.
PHIL. 318 A3-8
PHIL. 141-41
PHIL. 318 B3-8
PHIL. 318 B3-7
PHIL. 318 B3-6
PHIL. 318 A3-7
PHIL. 141-40
PHIL. 318 B3-5
PHIL. 141-39
PHIL. 318 A3-6
RIM
PHIL. 318 A3-5
PHIL. 318 B3-4
PHIL. 141-38
PHIL. 318 A3-4
PHIL. 318 B3-3
PHIL. 318 A3-3
PHIL. 318 A3-2
PHIL. 318 B3-2
PHIL. 141-36
PHIL. 318 A3-1
PHIL. 318 B3-1
PHIL. 141-35
H.H.
M.H. 6097
REMOVE HANDHOLE
M.H. 1808
M.H. 1809
M.H. 1810
M.H. 1811
M.H. 1812
2#8
PHIL. 114-98
PHIL. 114-97
PHIL. 114
M.H. 6098
MATCH LINE E-E
THIS SHEET
PHIL. 318 B1-5
PHIL. 318 A1-5
PHIL. 318 B1-4
PHIL. 318 A1-4
PHIL. 318 B1-3
PHIL. 318 A1-3
PHIL. 318 B1-2
PHIL. 318 B1-1
PHIL. 318 A1-2
PHIL. 318 A1-1
PHIL. 318 B2-
J.B.
G
NEW MACK AVE.
*2 OR LARGER STRANDED GROUND WIRE. (NCIDENTAL TO MULT. ST. LTG. CABLES.)
PHIL. 318 A2-6
PHIL. 318 B2-6
PHIL. 318 A2-5
PHIL. 318 B2-5
PHIL. 318 A2-4
PHIL. 318 B2-4
PHIL. 318 A2-3
PHIL. 318 B2-3
PHIL. 318 A2-2
PHIL. 318 B2-2
PHIL. 318 A2-1
H.H.
MAKE BURIED SPLICE
PHIL. 114-37
FUTURE
PHIL. 114
2/1
A3 B3 A2 B2 A1 B1 N
240/480V.
MULT. ST. LTG. CONTROL CABINET (PHIL. 318)
CONNER AVE.

4 5

MATCH LINE E-E
THIS SHEET
ANDERDON
ALLEY
PHIL. 626 TAP 1
(3-#2/0)
IN. 100 A. PRI. CUTOUTS. FUSE AT 40 A.
PRI. CONTROL SWITCH.
COMB. MULT. ST. LTG. TRANSF. POLE & MULT. ST. LTG. CABLE POLE.
50 KVA. 4800 - 240/480V. 1Φ TRANSFORMER.
IN. 75 A. C.T.S.I. FUSES
2KV. 2-#6 SEC. CABLES
EXIST. MACK AVE.
2/1
H.H.
PHIL. 114-102
PHIL. 114
2#8
6.6/20 A. 6000/10000 LUMEN SUBMARINE CONTROL COIL. COIL TO BE "ZIEBART" TREATED.

MULT. ST. LTG. WIRING DIAGRAM 240/480V.
AND SERIES ST. LTG. WIRING DIAGRAM

REVISIONS	DATE	DESCRIPTION	CHKD. BY

JEFFERSON/CONNER INDUSTRIAL REVITALIZATION PROJECT
MACK AVENUE LIGHTING
MULT. & SERIES ST. LTG. WIRING DIAGRAM

DRAWN	CEA
CHECKED	
APPROVED	CAH
DATE	AUG. 87

PLAN PREPARED BY
CONSULTING ENGINEERING ASSOCIATES INC.
ENGINEERING CONSULTANTS
16580 WYOMING DETROIT, MICH. 48221

DRWG. NO.	7 OF 40
FILE NO.	CEA 1137

CHECKED BY
APPROVED BY

PUBLIC LIGHTING DEPARTMENT
CITY OF DETROIT

FILE NO.	51-0606
SHEET NO.	84 OF 117
DATE	AUG. 87

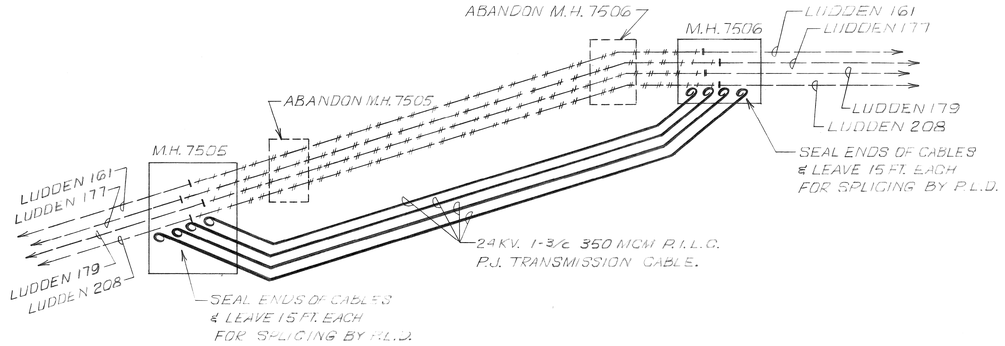

24 KV. WIRING DIAGRAM (4)

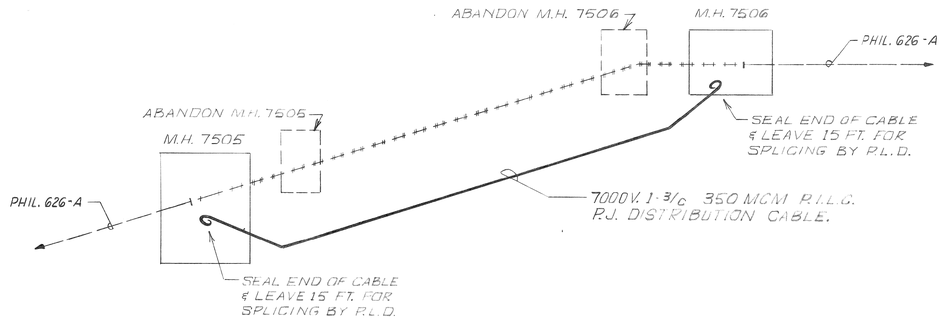

PRIMARY WIRING DIAGRAM (4)

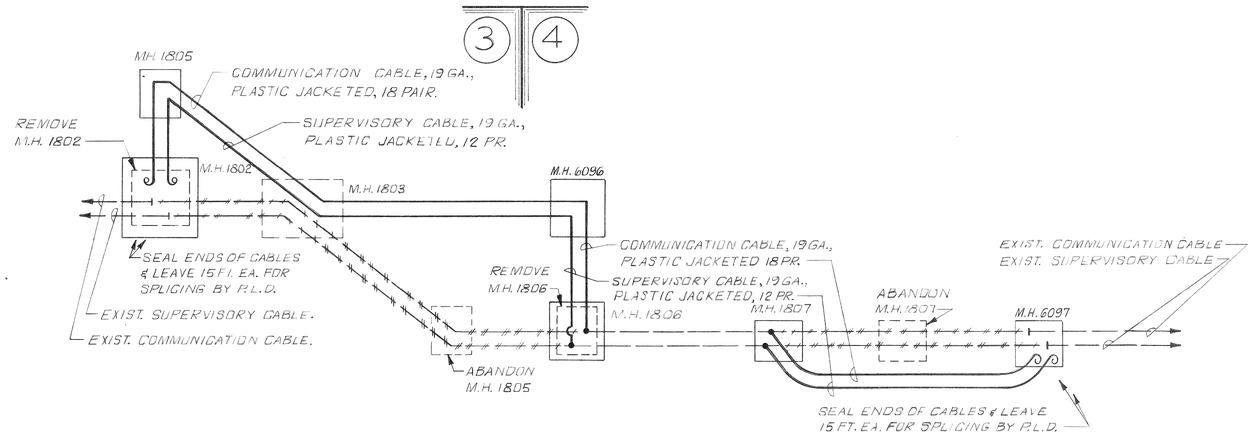

COMMUNICATION & SUPERVISORY CABLING DIAGRAM

REVISIONS	DATE	DESCRIPTION	CHKD. BY

JEFFERSON/CONNER INDUSTRIAL REVITALIZATION PROJECT

MACK AVENUE LIGHTING

MISC. WIRING DIAGRAMS

DRAWN	CEA
CHECKED	
APPROVED	
DATE	AUG. 87

PLAN PREPARED BY
CONSULTING ENGINEERING ASSOCIATES INC.
ENGINEERING CONSULTANTS
16580 WYOMING DETROIT, MICH. 48221

DRWG. NO. 8 OF 40 | FILE NO. CEA 1137

CHECKED BY

APPROVED BY

PUBLIC LIGHTING DEPARTMENT

CITY OF DETROIT

FILE NO. 51-0606

SHEET NO. 85 OF 117

DATE AUG. 87

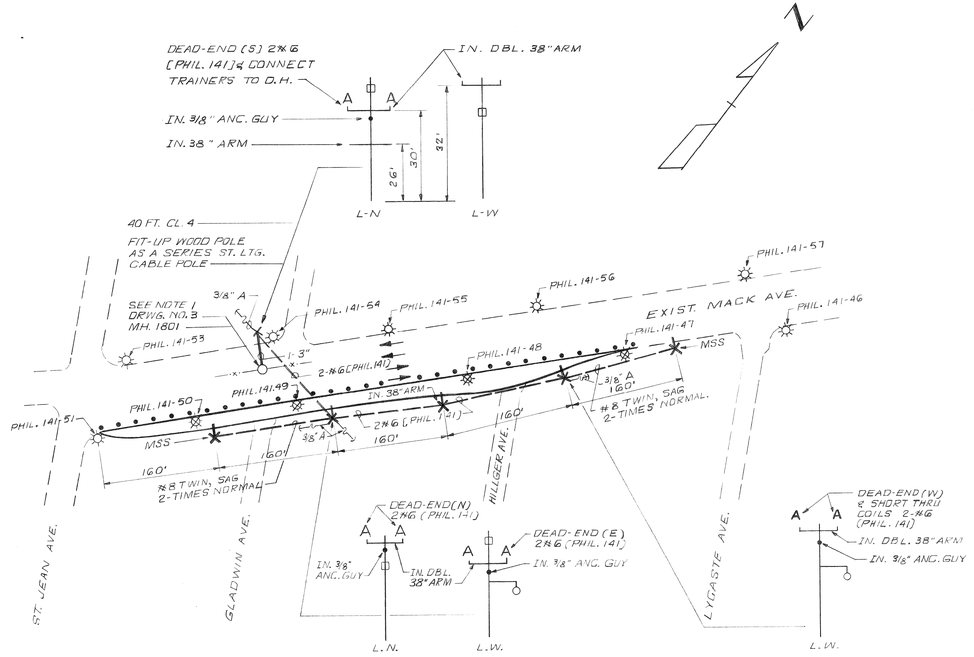

PRE-STAGE I

SCALE: 1" = 100'

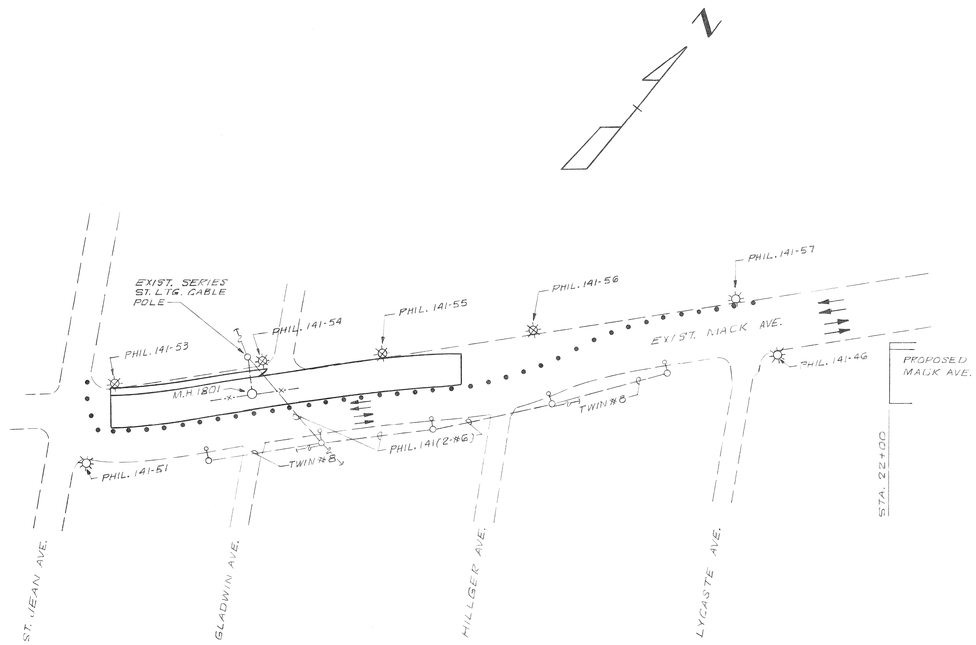

STAGE I

SCALE: 1" = 100'

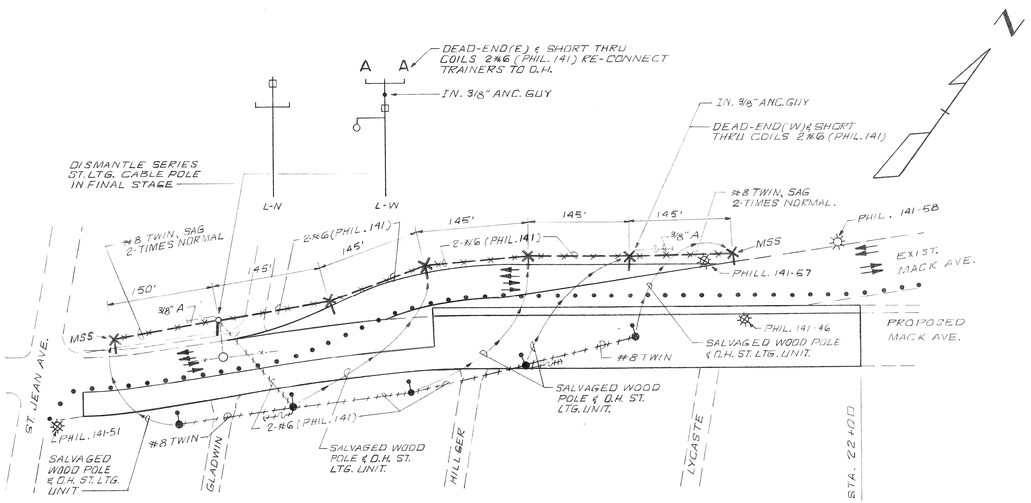

STAGE II & FINAL STAGE

SCALE: 1" = 100'

NOTES:

1. LOCATIONS FOR WOOD POLES TO BE INSTALLED ARE APPROXIMATE & ARE TO BE CONFIRMED BY THE ENGINEER.
2. WOOD POLES, O.H. ST. LTG. UNITS, & O.H. WIRES TO BE REMOVED IN FINAL STAGE OR AS DIRECTED BY THE ENGINEER.
3. TEMPORARY SPLICES TO MAINTAIN ST. LTG. CIRCUITS OPERATIONAL ARE THE RESPONSIBILITY OF THE CONTRACTOR & ARE INCIDENTAL TO RM 2-1/c #8 L.C. ST. LTG. CABLES.
4. ALL NEW WOOD POLES TO BE 35 FT. CLASS 4. (EXCEPT WHERE OTHERWISE NOTED.)

LIST OF MATERIAL

ITEM	QUANTITIES
1-3" ENCASED CONDUIT	40 LIN.FT.
35 FT. CLASS 4 WOOD POLE	6 EACH
40 FT. CLASS 4 WOOD POLE	1 EACH
FIT-UP WOOD POLE AS A SERIES ST. LTG. CABLE POLE.	1 EACH
O.H. ST. LTG. UNIT	7 EACH
SALVAGED O.H. ST. LTG. UNIT.	5 EACH
SALVAGED WOOD POLE	5 EACH
#8 TWIN	615 LIN.FT.
2-#6 O.H. LINE	1060 LIN.FT.
7500 V. 2-1/c #8 L.C. ST. LTG. CABLES	65 LIN.FT.
REMOVE #8 TWIN	615 LIN.FT.
REMOVE 2-#6 O.H. LINE	1060 LIN.FT.
REMOVE WOOD POLE	12 EACH
REMOVE O.H. ST. LTG. UNIT	12 EACH
DISMANTLE SERIES ST. LTG. CABLE POLE	1 EACH

REVISIONS	DATE	DESCRIPTION	CHKD. BY

JEFFERSON / CONNER INDUSTRIAL REVITALIZATION PROJECT

MACK AVENUE LIGHTING

TEMPORARY O.H. LTG.

DRAWN CEA
CHECKED
APPROVED
DATE AUG 87

PLAN PREPARED BY
CONSULTING ENGINEERING ASSOCIATES INC.
ENGINEERING CONSULTANTS
16580 WYOMING DETROIT, MICH. 48221
DRWG. NO. 9 OF 40
FILE NO. CEA 1137

CHECKED BY
APPROVED BY

PUBLIC LIGHTING DEPARTMENT

CITY OF DETROIT

FILE NO. 51-0607
SHEET NO. 86 OF 117
DATE AUG 87

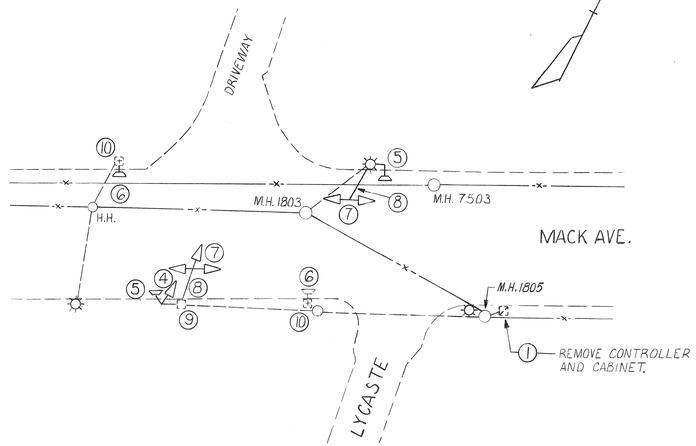

PLAN
SCALE: 1" = 40'

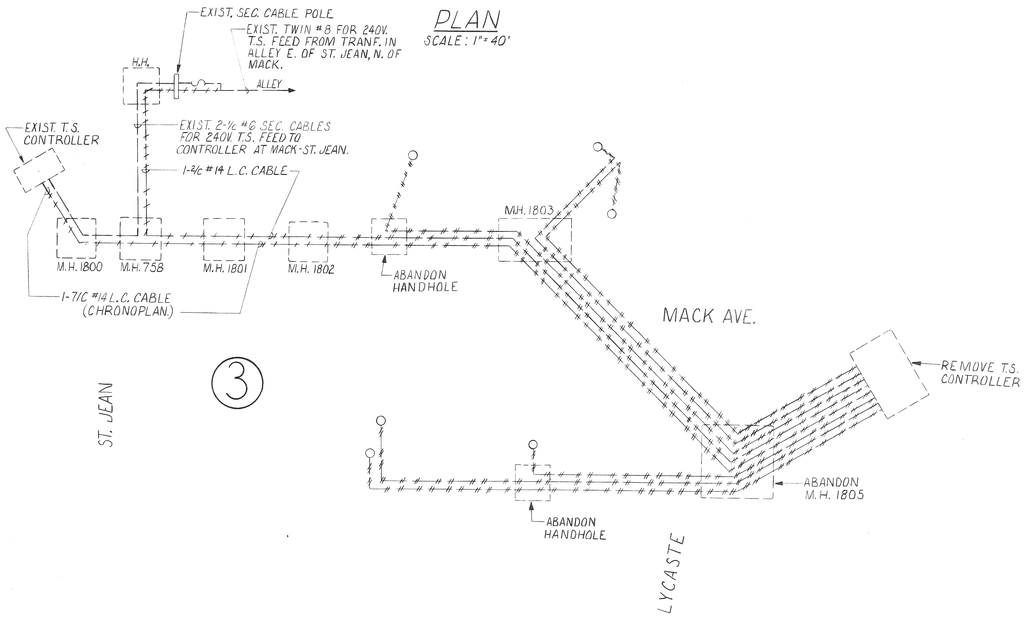

REMOVAL T.S. WIRING DIAGRAM

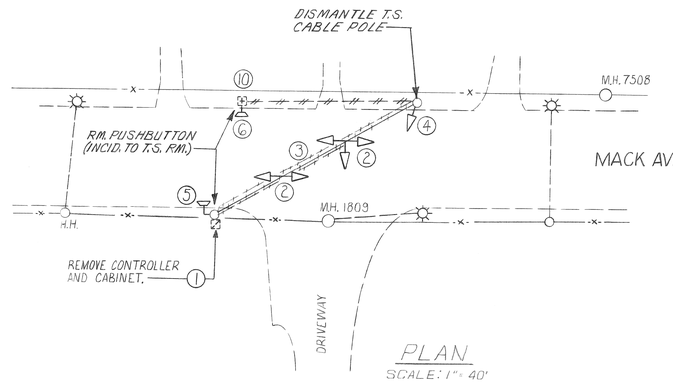

PLAN
SCALE: 1" = 40'

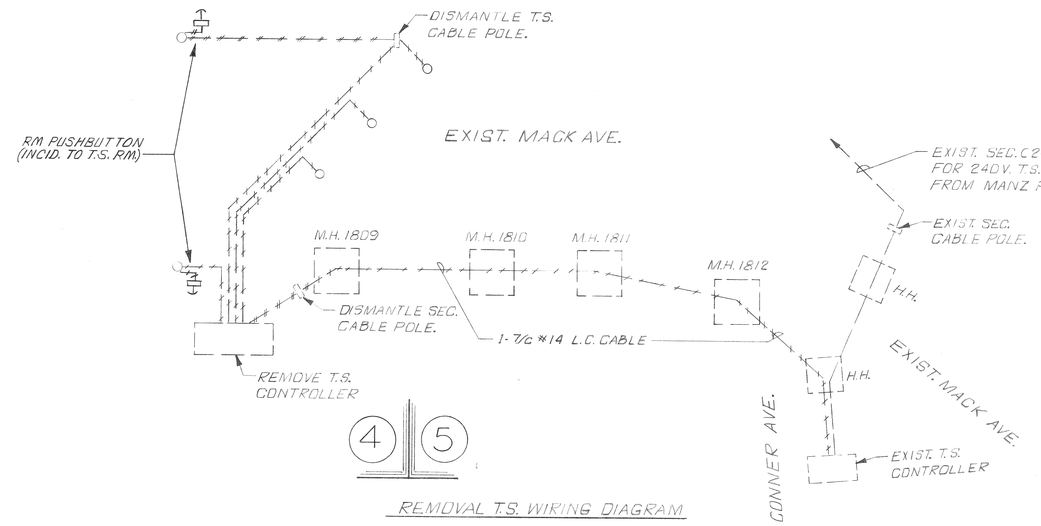

REMOVAL T.S. WIRING DIAGRAM

LIST OF MATERIAL

	ITEMS	QUANTITIES
1	REMOVE CONTROLLER AND CABINET	2 EACH
2	REMOVE SPAN WIRE MOUNTED T.S.	2 EACH
3	REMOVE SPAN WIRE	1 EACH
4	REMOVE BRACKET ARM MOUNTED T.S.	2 EACH
5	REMOVE BRACKET ARM MOUNTED PEDESTRIAN T.S.	3 EACH
6	REMOVE PEDESTAL MOUNTED PEDESTRIAN T.S.	3 EACH
7	REMOVE MAST ARM MOUNTED T.S.	2 EACH
8	REMOVE MAST ARM	2 EACH
9	REMOVE MAST ARM STD.	1 EACH
10	REMOVE PEDESTAL	3 EACH

REVISIONS	DATE	DESCRIPTION	CHKD. BY

JEFFERSON/CONNER INDUSTRIAL REVITALIZATION PROJECT

MACK AVENUE LIGHTING
T.S. REMOVAL

DRAWN CEA
CHECKED
APPROVED SM
DATE AUG. 87

PLAN PREPARED BY
CONSULTING ENGINEERING ASSOCIATES INC.
ENGINEERING CONSULTANTS
16580 WYOMING DETROIT, MICH. 48221

DRWG. NO. 10 OF 40
FILE NO. CEA 1137

CHECKED BY
APPROVED BY

PUBLIC LIGHTING DEPARTMENT
CITY OF DETROIT

FILE NO. 51-0606
SHEET NO. 87 OF 117
DATE AUG. 87

BID-ITEM	UNIT	DRWG. NO. 2	3	4	5	9	10	TOTAL
CONDUIT REPAIR-UNDER PAVEMENT	EACH	3	—	—	—	—	—	3
CONDUIT REPAIR-UNDER SIDEWALK OR DIRT	EACH	3	—	—	—	—	—	3
REMOVING STREETCAR RAIL AND FOUNDATION	LIN. FT.	250	—	—	—	—	—	250
1-3" ENCASED CONDUIT	LIN. FT.	—	690	160	320	40	—	1210
2-3" ENCASED CONDUIT	LIN. FT.	—	870	—	1085	—	—	1955
4-3" ENCASED CONDUIT	LIN. FT.	—	—	—	180	—	—	180
5-3" ENCASED CONDUIT	LIN. FT.	—	—	—	45	—	—	45
2-4" ENCASED CONDUIT	LIN. FT.	—	—	—	630	—	—	630
3-4" ENCASED CONDUIT	LIN. FT.	—	560	960	915	—	—	2435
4-4" ENCASED CONDUIT	LIN. FT.	—	—	—	70	—	—	70
9-4" ENCASED CONDUIT	LIN. FT.	—	600	115	—	—	—	715
9-4" REINFORCED CONDUIT	LIN. FT.	—	—	245	—	—	—	245
12-5" REINFORCED CONDUIT	LIN. FT.	—	—	310	—	—	—	310
6" SEWER (LIGHTING)	LIN. FT.	—	120	—	—	—	—	120
ROUND HANDHOLE	EACH	—	6	—	6	—	—	12
TYPE "D" HANDHOLE	EACH	—	3	—	8	—	—	11
TWO-WAY MANHOLE	EACH	—	1	4	—	—	—	5
CORNER MANHOLE	EACH	—	2	2	—	—	—	4
FOUR-WAY MANHOLE	EACH	—	—	—	1	—	—	1
ABANDON HANDHOLE	EACH	—	4	1	—	—	—	5
ABANDON MANHOLE	EACH	—	1	3	—	—	—	4
REMOVE HANDHOLE	EACH	—	—	2	—	—	—	2
REMOVE MANHOLE	EACH	—	2	1	—	—	—	3
REMOVE U.G.-FED ST. LTG. UNIT	EACH	—	12	12	7	—	—	31
REMOVE FOUNDATION	EACH	—	15	12	7	—	—	34
REMOVE CALL BOX PEDESTAL	EACH	—	—	1	—	—	—	1
MULT. ST. LTG. CONTROL CABNET	EACH	—	—	—	1	—	—	1
MULT. ST. LTG. CONTROL CABNET FOUNDATION	EACH	—	—	—	1	—	—	1
	EACH							
CODE 010-06 ST. LTG. STD.	EACH	—	11	16	5	—	—	32
CODE 118-06 ST. LTG. STD.	EACH	—	10	6	19	—	—	35
CODE 010-06 ST. LTG. STD. FOUNDATION	EACH	—	7	—		—	—	7
CODE 118-06 ST. LTG. STD. FOUNDATION	EACH	—	10	4	17	—	—	31
MODIFY FOUNDATION TO FIT CODE 118-06 ST. LTG. STD.	EACH	—	—	2	2	—	—	4
150W. TYPE II SODIUM VAPOR LUMINAIRE (240V.)	EACH	—	7	—	—	—	—	7
250W. TYPE III SODUIM VAPOR LUMINAIRE (240V.)	EACH	—	—	6	10	—	—	16
400W. TYPE III SODUIM VAPOR LUMINAIRE (240V.)	EACH	—	14	16	14	—	—	44
REMOVE 1-2/C #14 L.C. CABLE	LIN. FT.	—	800	—	—	—	—	800
REMOVE 1-7/C #14 L.C. CABLE	LIN. FT.	—	580	45	1030	—	—	1655
REMOVE 2-1/C #8 L.C. ST. LTG. CABLES	LIN. FT.	—	680	1050	900	—	—	2630
	LIN. FT.							
2KV., 2-1/C #6 SECONDARY CABLES	LIN. FT.	—	—	—	230	—	—	230
2KV., 1-1/C #2 ST. LTG. CABLE & 1-#2 NEUTRAL	LIN. FT.	—	605	—	—	—	—	605
2KV., 2-1/C #2 ST. LTG. CABLES & 1-#2 NEUTRAL	LIN. FT.	—	2865	4150	3870	—	—	10885
2KV., 4-1/C #2 ST. LTG. CABLES & 1-#2 NEUTRAL	LIN. FT.	—	75	—	—	—	—	75
2KV., 2-1/C #2/0 ST. LTG. CABLES & 1-#2/0 NEUTRAL	LIN. FT.	—	—	—	700	—	—	700
SUPERVISORY CABLE, 19GA., PLASTIC JACKETED, 12 PR.	LIN. FT.	—	640	400	—	—	—	1040
COMMUNICATION CABLE, 19GA., PLASTIC JACKETED, 18 PR	LIN. FT.	—	640	400	—	—	—	1040
	LIN. FT.							
7000V., 1-3/C 350 MCM P.I. L.C. P.J. DISTRIBUTION CABLE	LIN. FT.	—	—	345	—	—	—	345
7500V., 2-1/C #8 L.C. ST. LTG. CABLES	LIN. FT.	—	—	—	40	65	—	105
24KV., 1-3/C 350 MCM P.I. L. C. P.J. TRANSMISSION CABLE	LIN. FT.	—	—	1380	—	—	—	1380

REVISIONS DATE	DESCRIPTION	CHKD. BY

JEFFERSON/CONNER INDUSTRIAL REVITALIZATION PROJECT

MACK AVENUE LIGHTING

QUANTITY SHEET

DRAWN	CEA
CHECKED	
APPROVED	
DATE	AUG 87

PLAN PREPARED BY:
CONSULTING ENGINEERING ASSOCIATES INC.
ENGINEERING CONSULTANTS
16580 WYOMING DETROIT, MICH., 48221

DRWG. NO.	11 OF 40
FILE NO.	CEA 1137

CHKD. BY

APPROVED BY

PUBLIC LIGHTING DEPARTMENT
CITY OF DETROIT

FILE NO.	51-0606
SHEET NO.	88 OF 117
DATE	AUG 87

BID-ITEM	UNIT	DRWG. NO. 2	3	4	5	9	10	TOTAL
35 FT. CLASS 4 WOOD POLE	EACH	—	—	—	—	6	—	6
40 FT. CLASS 4 WOOD POLE	EACH	—	—	—	—	1	—	1
45 FT. CLASS 2 WOOD POLE	EACH	—	—	—	1	—	—	1
FIT-UP WOOD POLE AS A SERIES ST. LTG. CABLE POLE	EACH	—	—	—	—	1	—	1
FIT-UP WOOD POLE AS A COMB. MULT ST.LTG. TRANSF. POLE & MULT. ST. LTG. & SECONDARY CABLE POLE	EACH	—	—	—	1	—	—	1
#8 TWIN	LIN.FT.	—	—	—	—	615	—	615
2#6 O.H. LINE	LIN.FT.	—	—	—	—	1060	—	1060
O.H. ST. LTG. UNIT	EACH	—	—	—	—	7	—	7
SALVAGED O.H. ST. LTG. UNIT	EACH					5		5
SALVAGED WOOD POLE	EACH	—	—	—	—	5	—	5
REMOVE #8 TWIN	LIN.FT.	—	—	715	—	615	—	1330
REMOVE 2#6 O.H. LINE	LIN.FT.	—	—	—	—	1060	—	1060
REMOVE WOOD POLE	EACH	—	—	2	—	12	—	14
REMOVE O.H. ST. LTG. UNIT	EACH	—	—	1	—	12	—	13
DISMANTLE SERIES ST. LTG. CABLE POLE	EACH	—	—	—	—	1	—	1
DISMANTLE T.S. CABLE POLE	EACH	—	—	1	—	—	—	1
DISMANTLE SECONDARY CABLE POLE	EACH	—	—	1	—	—	—	1
REMOVE CONTROLLER & CABNET	EACH	—	—	—	—	—	2	2
REMOVE SPAN WIRE MOUNTED T.S.	EACH	—	—	—	—	—	2	2
REMOVE SPAN WIRE	EACH	—	—	—	—	—	1	1
REMOVE BRACKET ARM MOUNTED T.S.	EACH	—	—	—	—	—	2	2
REMOVE BRACKET ARM MOUNTED PEDESTRIAN T.S.	EACH	—	—	—	—	—	3	3
REMOVE PEDESTAL MOUNTED PEDESTRIAN T.S.	EACH	—	—	—	—	—	3	3
REMOVE MAST ARM MOUNTED T.S.	EACH	—	—	—	—	—	2	2
REMOVE MAST ARM	EACH	—	—	—	—	—	2	2
REMOVE MAST ARM STD.	EACH	—	—	—	—	—	1	1
REMOVE PEDESTAL	EACH	—	—	—	—	—	3	3

REVISIONS	DATE	DESCRIPTION	CHKD. BY

JEFFERSON/CONNER INDUSTRIAL REVITALIZATION PROJECT

MACK AVENUE LIGHTING

QUANTITY SHEET

DRAWN CEA

CHECKED

APPROVED SM

DATE AUG 87

PLAN PREPARED BY:
CONSULTING ENGINEERING ASSOCIATES, INC.
ENGINEERING CONSULTANTS
16580 WYOMING DETROIT, MICH., 48221

DRWG. NO. 12 OF 40

FILE NO. CEA 1137

CHKD. BY

APPROVED BY

PUBLIC LIGHTING DEPARTMENT
CITY OF DETROIT

FILE NO. 51-0606

SHEET NO. 89 OF 117

DATE AUG 87

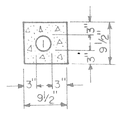

1-3" CONDUIT

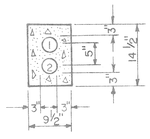

2-3" CONDUITS

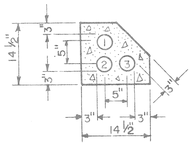

3-3" CONDUITS

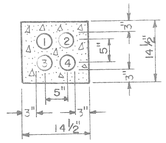

4-3" CONDUITS

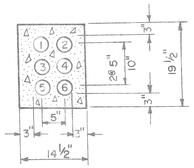

6-3" CONDUITS

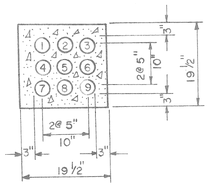

9-3" CONDUITS

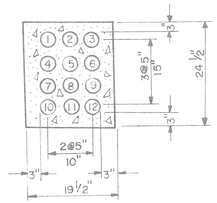

12-3" CONDUITS

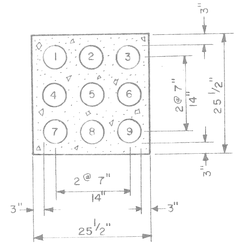

9-5" CONDUITS

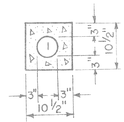

1-4" CONDUIT

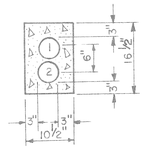

2-4" CONDUITS

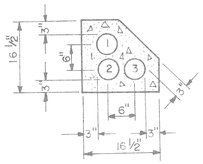

3-4" CONDUITS

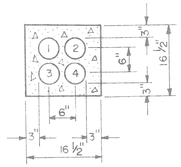

4-4" CONDUITS

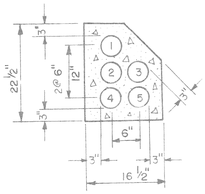

5-4" CONDUITS

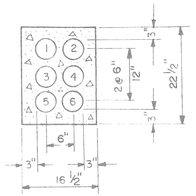

6-4" CONDUITS

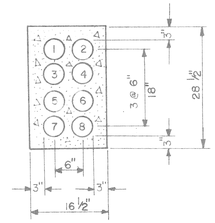

3-4" CONDUITS

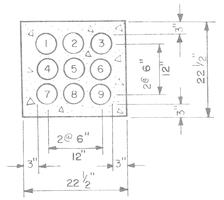

9-4" CONDUITS

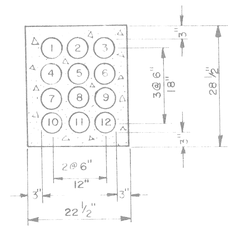

12-4" CONDUITS

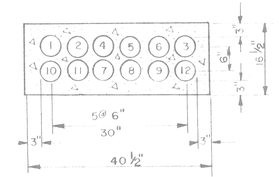

12-4" CONDUITS IN BRIDGE APPROACH

2-3" CONDUITS

6-3" CONDUITS

12-3" CONDUITS

ALTERNATE ARRANGEMENT OF 3" CONDUIT
(TO SUIT FIELD CONDITIONS)
(TO BE APPROVED BY THE ENGINEER)

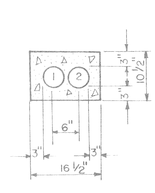

2-4" CONDUITS

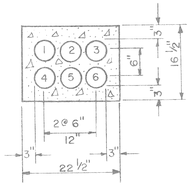

6-4" CONDUITS

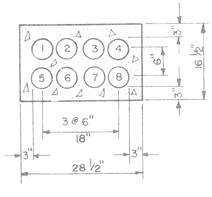

8-4" CONDUITS

ALTERNATE ARRANGEMENT OF 4" CONDUIT
(TO SUIT FIELD CONDITIONS)
(TO BE APPROVED BY THE ENGINEER)

CONCRETE ENCASED CONDUIT SECTIONS

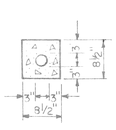

1-2" CONDUIT

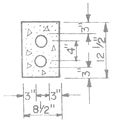

2-2" CONDUITS

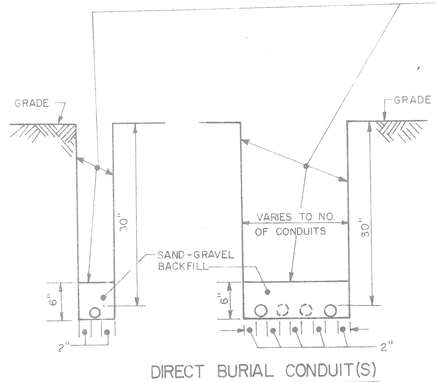

DIRECT BURIAL CONDUIT(S)

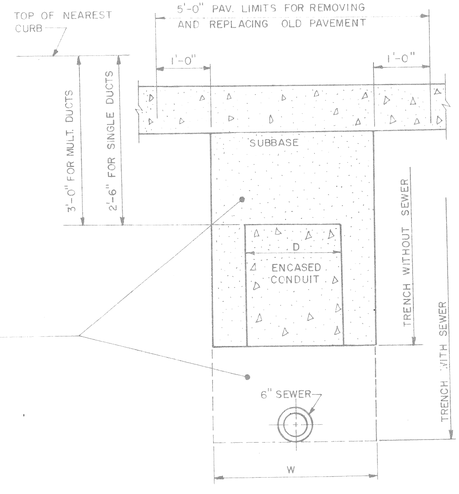

TYPICAL SECTION OF TRENCH
N.T.S.

NOTE:
PREFERRED TRENCH WIDTH "W"
NOT WIDER THAN CONDUIT
ENCASEMENT WIDTH "D"

101

REVISIONS	DATE	DESCRIPTION	CHKD. BY

JEFFERSON/CONNER INDUSTRIAL REVITALIZATION PROJECT

MACK AVENUE LIGHTING

MISC. ENCASED CONDUIT SECTIONS DETAILS

DRAWN CEA	PLAN PREPARED BY CONSULTING ENGINEERING ASSOCIATES INC. ENGINEERING CONSULTANTS 16580 WYOMING DETROIT, MICH., 48221		PUBLIC LIGHTING DEPARTMENT CITY OF DETROIT
CHECKED		CHECKED BY	
APPROVED SM		APPROVED BY	
DATE AUG. 87	DRWG. NO. 13 OF 40	FILE NO. CEA 1137	

FILE NO.	51-0606
SHEET NO.	90 OF 117
DATE	AUG. 87

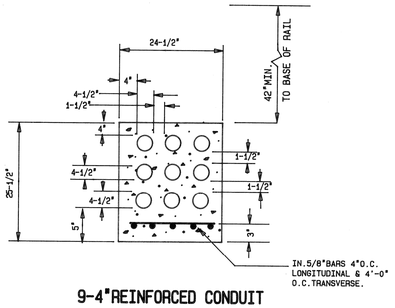

9-4"REINFORCED CONDUIT

N.T.S.

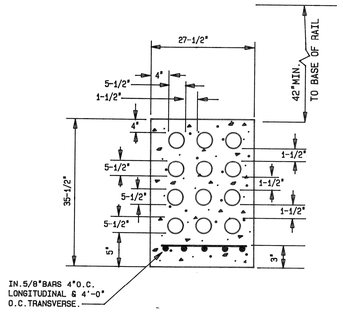

12-5"REINFORCED CONDUIT

N.T.S.

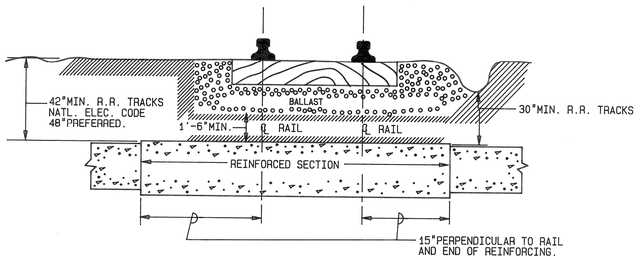

INSTALLTION OF REINFORCED CONDUIT

(OPEN CUT)

NOTES:

1. TRACK SUPPORT DEVICES SHALL BE PLACED & REMOVED TO CARRY THE R.R. TRACKS OVER THE OPEN TRENCH INSTALLATION WITH THE TRENCH PROPERLY SUPPORTED WITH SHEETING & ANY OTHER SUPPORTS REQUIRED TO COMPLETE THE CONDUIT INSTALLATION WITHIN THE R.R. R.O.W. THE EXTRA COST OF SUCH INSTALLATION SHALL BE INCIDENTAL TO THE ENCASED CONDUIT ITEM.
2. CONTRACTOR TO CONTACT DIVISION ENGINEER OF RAILROAD BEFORE STARTING EXCAVATION FOR CONDUIT INSTALLATION.
3. CONTRACTOR SHALL REIMBURSE R.R.CO. FOR SERVICES PERFORMED BY R.R.CO. WHERE REQUIRED.

CONSTRUCTION NOTES

1. ALL WORK WILL BE CONDUCTED SO AS NOT TO INTERFERE WITH, INTERRUPT OR ENDANGER THE INTERGRITY OF RAIL OPERATION.
2. AUGERS OR SIMILAR DEVICES USED FOR PIPE EMPLACEMENT SHALL BE PROVIDED WITH MECHANICAL ARRANGEMENT THAT WILL PREVENT THE CUTTING HEAD FROM LEADING THE PIPE SO THAT THERE WILL BE NO UNSUPPORTED EXCAVATION AHEAD OF PIPE.
3. THE USE OF WATER OR OTHER LIQUIDS TO FACILITATE CASING EMPLACEMENT AND SPOIL REMOVAL IS PROHIBITED.
4. WHEN AN OBSTRUCTION IS ENCOUNTERED DURING INSTALLATION AND IT BECOMES EVIDENT THAT IT IS IMPOSSIBLE TO ADVANCE THE PIPE, ALL OPERATIONS WILL CEASE, THE CASING PIPE SHALL BE ABANDONED IN PLACE AND FILLED COMPLETELY WITH 1:6 GROUT.
5. AFTER CONDUIT IS PULLED INTO PLACE VIA THE CONDUIT SLED, CASING PIPE IS TO BE COMPLETELY FILLED BY PRESSURE GROUTING WITH A UNIFORM 1:6 MIXTURE.
6. TRACK SUPPORTS WILL BE INSTALLED WHEN DIRECTED BY RAILROAD UNLESS OTHERWISE AGREED, THIS WORK TO BE PERFORMED BY RAILROAD EMPLOYEES.
7. GROUT PUMP TO BE MONITORED BY PRESSURE GAUGE. PRESSURE NOT TO EXCEED 100 P.S.I.

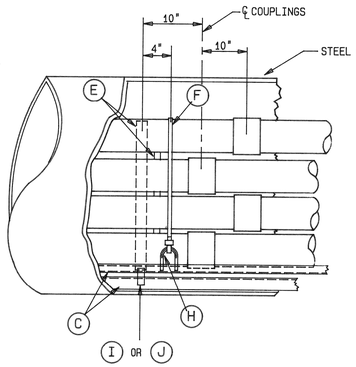

ELEVATION

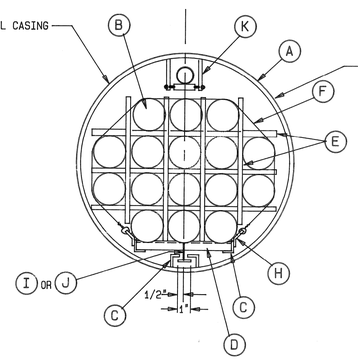

END VIEW

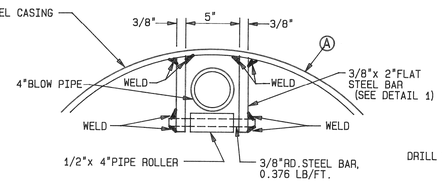

Ⓚ BLOW PIPE HANGER

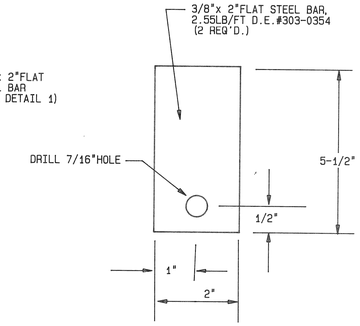

DETAIL"1"

BILL OF MATERIAL	
ITEM	DESCRIPTION
A	STEEL CASING PIPE (36"O.D. 0.562"WALL THICKNESS)
B	5" OR 4" PLASTIC CONDUIT
C	1-1/2"x 1-1/4"x 1/8"ANGLE STEEL 1.23LB/FT.FULL LENGTH OF CASING.
D	FOR 5" CONDUITS 2"x 1"x 3/16"CHANNEL STEEL 17-1/4"LONG (8'O.C.) 2.59LB/FT. FOR 4" CONDUITS 2"x 1"x 3/16"CHANNEL STEEL 14-1/4"LONG (8'O.C.) 2.59LB/FT.
E	VERTICAL & HORIZONTAL SPACERS, 2" WIDE STRIPS CUT FROM 1/2" BAKELITE PANEL BOARD OR OF SOME OTHER EQUIVALENT MATERIAL.
F	3/4" S.S. STRAPPING 0.025" THICKNESS.
G	1"x 1"x 1/8"ANGLE STEEL 0'-8"LONG, 0.80LB/FT.TO JOIN LENGTHS OF 1-1/2"x 1-1/2"x 1/8"STEEL ANGLES.
H	STRAPPING LOOP, FABRICATED FROM 3/8" Ø REINF.BARS.
I	STRUCTURAL TEE ST 3 JR. 2.20LB/FT. (30"& 36"CASING)
J	STRUCTURAL TEE ST 4 JR. 3.25LB/FT. (26"CASING)
K	BLOW PIPE HANGER (SEE DETAIL FOR MATERIALS)
L	3/8" Ø REINFORCING BARS

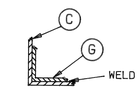

SECTION"C-C"

DETAIL FOR JOINING LENGTHS OF 1-1/2"x 1-1/2"ANGLE STEEL.

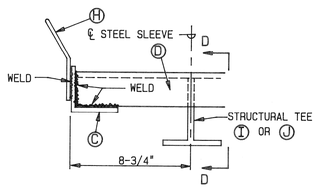

SECTION"B-B"

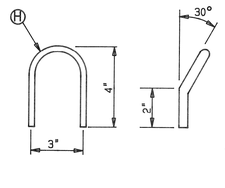

STRAPPING LOOP

FABRICATED FROM 3/8" Ø REINFORCING ROD 9-3/4"LG.

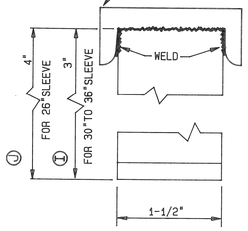

SECTION"D-D"

DETAIL OF TEE GUIDE

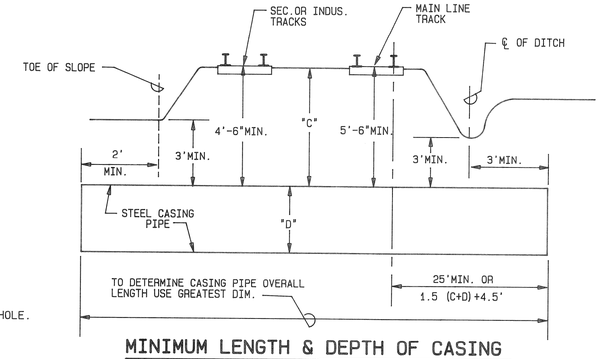

MINIMUM LENGTH & DEPTH OF CASING

NUMBER OF CONDUITS	CASING SIZE	CASING WALL THICKNESS	GROUT PER 10' OF CASING
6	26"	0.438	1.0 CU/YD
9	30"	0.469	1.25 CU/YD
12	36"	0.532	1.85 CU/YD
16	36"	0.532	1.6 CU/YD

TABLE OF MIN.WALL THICKNESS FOR STEEL CASING PIPE

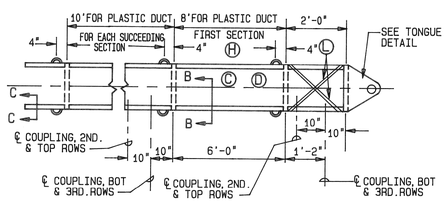

PLAN OF CONDUIT SLED

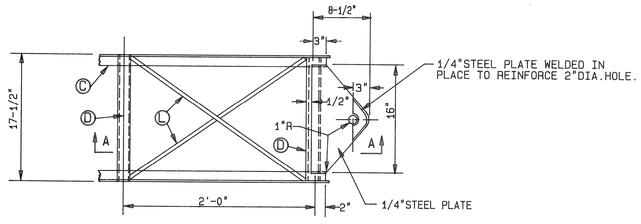

PULLING TONGUE DETAIL

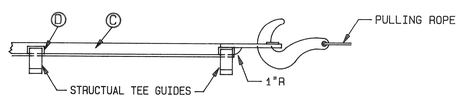

SECTION"A-A"

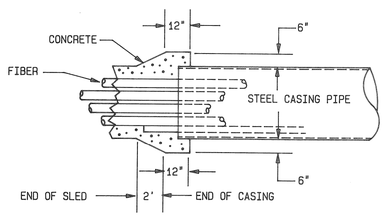

METHOD FOR SEALING CASING ENDS

NOTE:

DETAILS ON THIS SHEET ARE NOT TO SCALE.

REVISIONS	DATE	DESCRIPTION	CHKD. BY

JEFFERSON / CONNER INDUSTRIAL REVITALIZATION PROJECT
MACK AVE. LIGHTING

MISCELLANEOUS REINFORCED CONDUIT DETAILS

DRAWN	CEA
CHECKED	
APPROVED	SM
DATE	AUG. 87

PLAN PREPARED BY
CONSULTING ENGINEERING ASSOCIATES INC.
ENGINEERING CONSULTANTS
16580 WYOMING DETROIT, MICH. 48221

DRWG. NO. 14 OF 40 | FILE NO. CEA 1137

CHECKED BY

APPROVED BY

PUBLIC LIGHTING DEPARTMENT
CITY OF DETROIT

102A

FILE NO. 51-0607
SHEET NO. 91 OF 117
DATE AUG. 87

102A

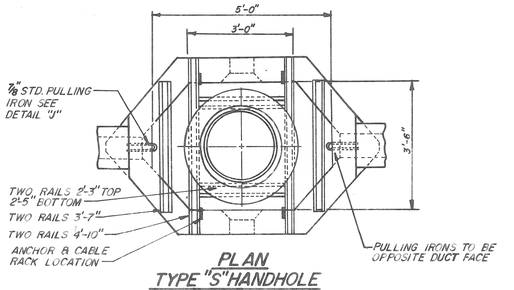

PLAN
TYPE "S" HANDHOLE
N.T.S.

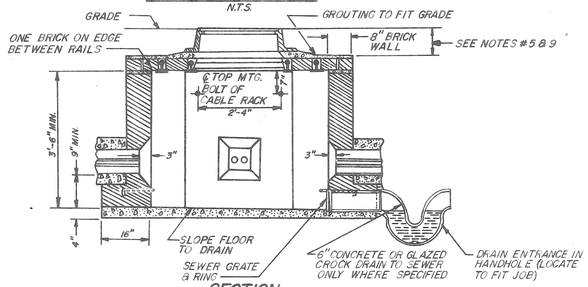

SECTION
TYPE "S" HANDHOLE
N.T.S.

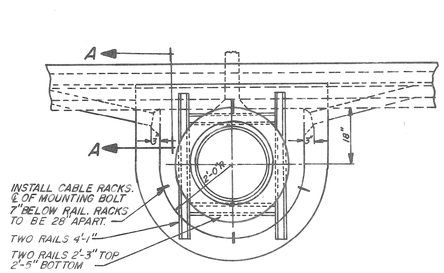

PLAN
TYPE "D" HANDHOLE
N.T.S.

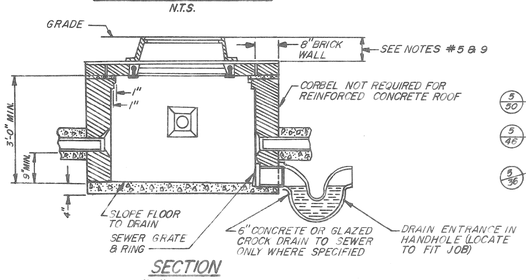

SECTION
TYPE "D" HANDHOLE
N.T.S.

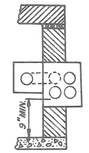

SECTION "A-A"

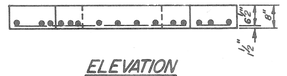

ELEVATION

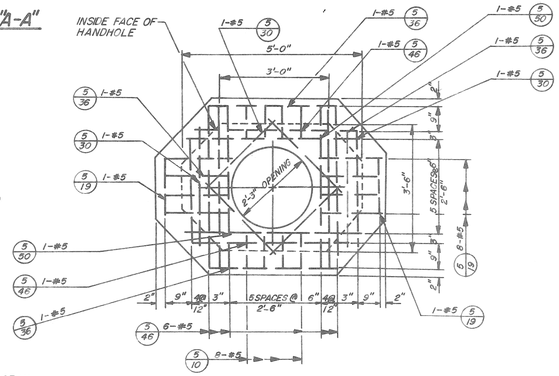

PLAN
ALTERNATE ROOF-TYPE "S" HANDHOLE
N.T.S.

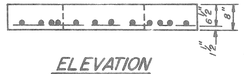

ELEVATION

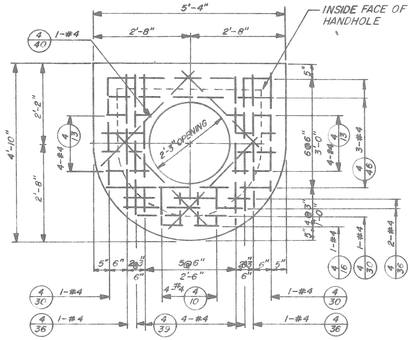

PLAN
ALTERNATE ROOF-TYPE "D" HANDHOLE
N.T.S.

TYPE "D" HANDHOLE TABLE FOR #4 BARS		
MARK	NO.	LENGTH
4-46	3	4'-6"
4-40	4	4'-0"
4-39	4	3'-9"
4-36	4	3'-6"
4-30	3	3'-0"
4-16	1	18"
4-13	8	15"
4-10	4	12"

TYPE "S" HANDHOLE TABLE FOR #5 BARS		
MARK	NO.	LENGTH
5-50	2	5'-0"
5-46	R	4'-6"
5-36	4	3'-6"
5-30	6	3'-0"
5-19	10	21"
5-10	8	12"

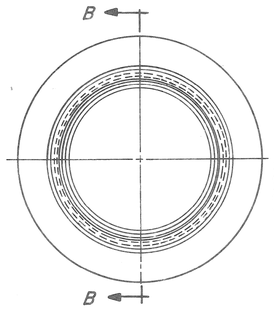

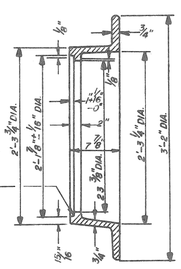

NOTE:
1. FRAMES MAY BE A.S.T.M. CLASS 30 GRAY IRON IF THE CONTRACTOR SO ELECTS.
2. ALL FILLETS ARE 1/2" RADIUS, & ALL ROUNDS ARE 1/4" RADIUS.

SECTION "B-B"

P.L.C. PATTERN NO.1A
A.S.T.M. CLASS 20 OR 30 GRAY IRON
APPROX. WT. 251 LBS.
HANDHOLE FRAME

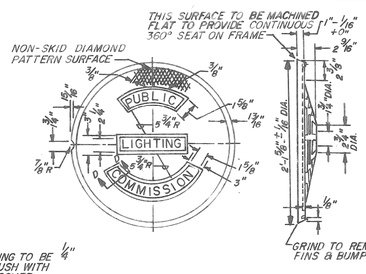

SECTION "E-E"

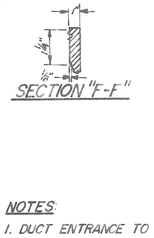

SECTION "F-F"

ALL LETTERING TO BE 1/4" HIGH AND FLUSH WITH SURFACE OF COVER

SECTION "D-D"

P.L.C. PATTERN NO.2A
A.S.T.M. CLASS 30 GRAY IRON
APPROX. WT. 145 LBS.
STREET TYPE COVER
TO BE USED IN STREETS & DRIVES

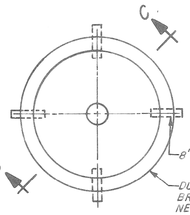

PLAN

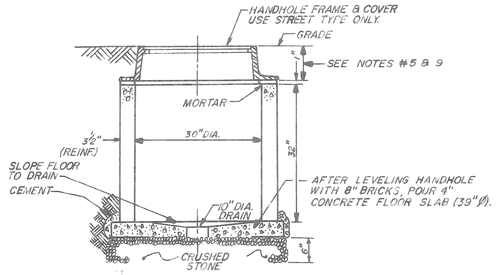

SECTION "C-C"
REINFORCED CONCRETE PIPE (CLASS III)
ROUND HANDHOLE

NOTES:
1. DUCT ENTRANCE TO BE BUILT AS REQUIRED.
2. ALL RAILS TO BE 60#/YD. OR HEAVIER.
3. CABLE PULLING IRONS TO BE GALVANIZED.
4. CABLE RACKS AND ARMS TO BE GALVANIZED.
5. IN PAVEMENT PROVIDE AT LEAST 3" BETWEEN ROOF AND BASE OF PAVEMENT. WHERE EXISTING GRADE IS HIGHER THAN PROP. FUTURE GRADE INSTALL BRICK RING OR GROUT (AS REQ'D.) UNDER FRAME TO ALLOW FOR FUTURE FRAME ADJUSTMENT.
6. BAR NUMBERS DENOTE THE SIZE OF BAR REQUIRED IN ACCORDANCE WITH CURRENT USAGE SPECIFIED BY THE CONCRETE REINFORCING STEEL INSTITUTE.
7. EXCAVATION LIMITS FOR PUBLIC LIGHTING DEPARTMENT HANDHOLES SHALL BE ON VERTICAL PLANES OF THE FOOTING OUTLINE.
8. INSTALL ANCHORS & CABLE-RACKS AS SHOWN.
9. WHERE HANDHOLES ARE LOCATED BACK OF CURBS ROOF MUST BE BUILT 18" BELOW CURB GRADE, TO PROVIDE FOR FUTURE WIDENING.

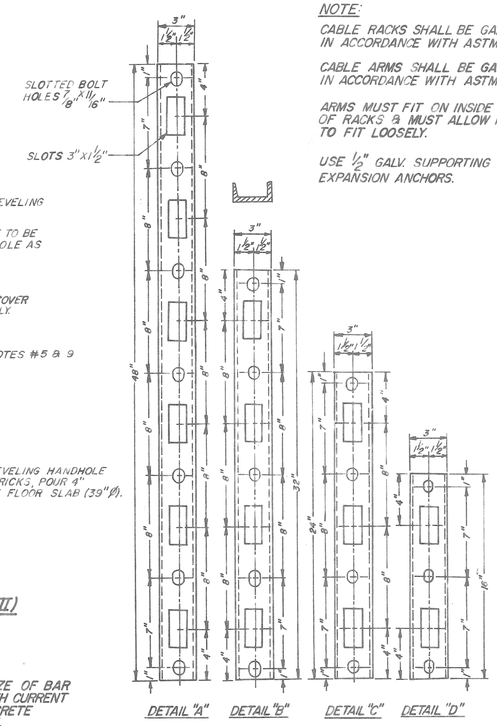

CABLE RACKS
3" STD. 4.1# CHANNEL
N.T.S.

NOTE:
CABLE RACKS SHALL BE GALV. AFTER FAB. IN ACCORDANCE WITH ASTM A-123.

CABLE ARMS SHALL BE GALV. AFTER FAB. IN ACCORDANCE WITH ASTM A-153 53.

ARMS MUST FIT ON INSIDE & OUTSIDE OF RACKS & MUST ALLOW INSULATOR TO FIT LOOSELY.

USE 1/2" GALV. SUPPORTING BOLTS AND EXPANSION ANCHORS.

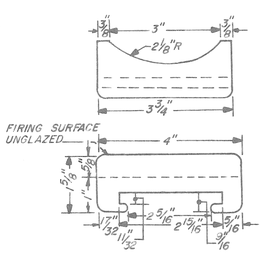

CABLE ARM INSULATORS
WHITE GLAZED PORCELAIN DRY PROCESS
N.T.S.

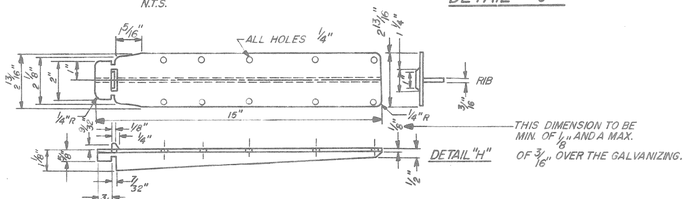

CABLE ARMS
MALLEABLE CAST IRON
N.T.S.

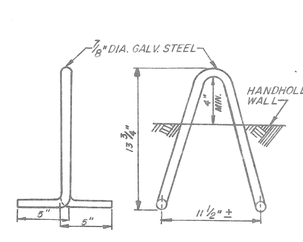

PULLING IRON
N.T.S.
DETAIL - "J"

CABLE RACKS, CABLE ARMS, AND CABLE ARM INSULATORS
N.T.S.

REVISIONS	DATE	DESCRIPTION	CHKD. BY

JEFFERSON/CONNER INDUSTRIAL REVITALIZATION PROJECT
MACK AVENUE LIGHTING
HANDHOLE DETAILS

DRAWN	CEA	PLAN PREPARED BY CONSULTING ENGINEERING ASSOCIATES INC. ENGINEERING CONSULTANTS 16580 WYOMING DETROIT, MICH. 48221	
CHECKED			CHECKED BY
APPROVED			APPROVED BY
DATE	AUG. 87	DRWG. NO. 15 OF 40	FILE NO. CEA 1137

PUBLIC LIGHTING DEPARTMENT
CITY OF DETROIT

FILE NO.	51-0606
SHEET NO.	92 OF 117
DATE	AUG. 87

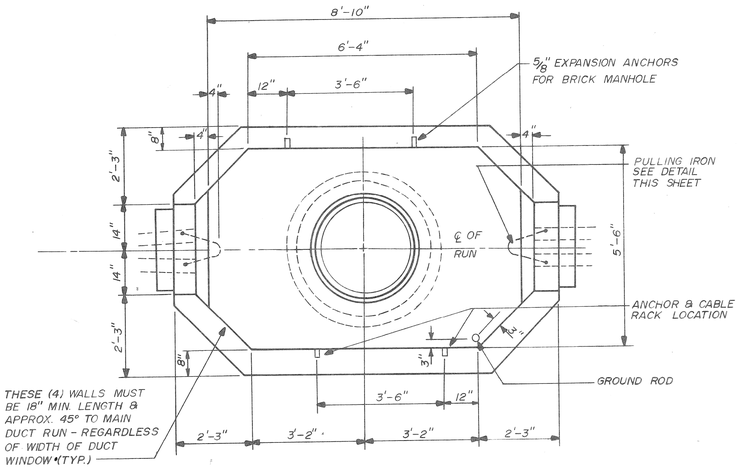

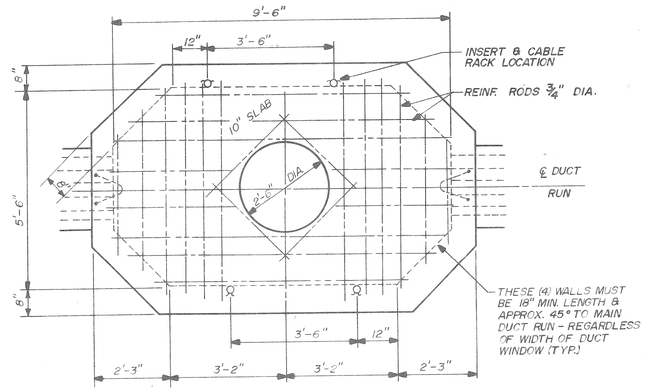

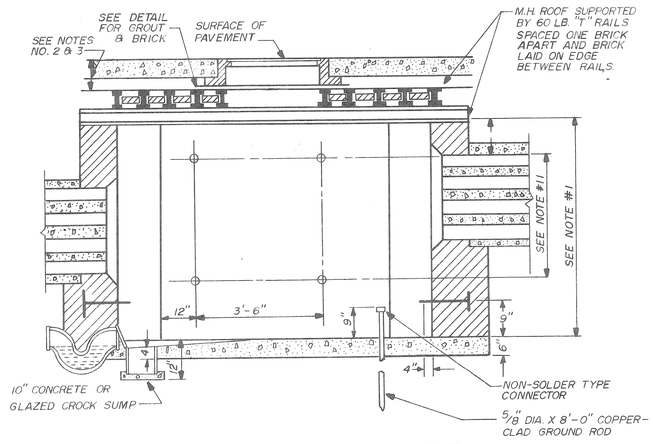

BRICK - TWO WAY MANHOLE
N.T.S.

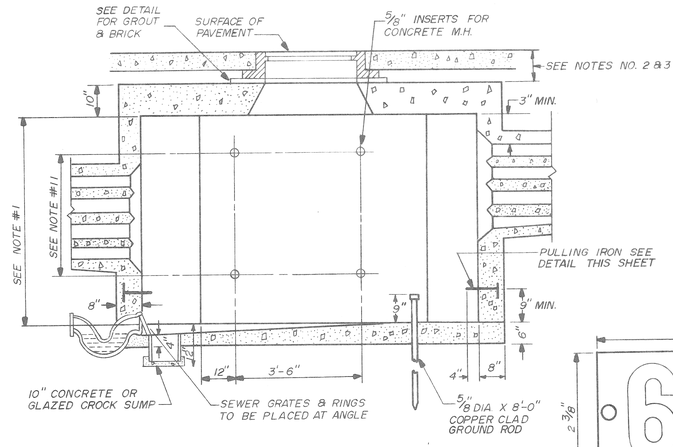

CONCRETE - TWO WAY MANHOLE
N.T.S.

3/4" DIA. REINFORCING STEEL RODS REQ'D. FOR 2-WAY M.H.

10 PIECES	3'-6" LONG
2 PIECES	5'-0" LONG
8 PIECES	6'-6" LONG
2 PIECES	8'-0" LONG
4 PIECES	10'-0" LONG

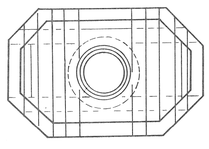

60 LB. "T" RAILS

2 PIECES	4'-6" LONG
2 PIECES	6'-0" LONG
6 PIECES	6'-10" LONG
2 PIECES	9'-3" LONG
2 PIECES	10'-8" LONG
TOTAL WEIGHT 2040 LB.	

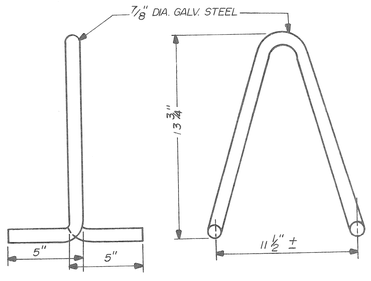

PULLING IRON
N.T.S.

NOTES:

1. THIS DIMENSION NORMALLY 6'-0". SEE SPECIFICATIONS FOR UNUSUAL CONDITIONS.
2. WHERE M.H.'S ARE LOCATED BACK OF CURBS, TOP OF M.H. ROOF MUST BE BUILT 26" BELOW CURB GRADE TO PROVIDE FOR FUTURE PAVEMENT.
3. IN EXISTING PAVEMENT, PROVIDE AT LEAST 8" BETWEEN TOP OF ROOF AND BASE OF PAVEMENT.
4. BOLTS, RACKS & PULLING IRONS TO BE HOT-DIP GALV.
5. ℄ OF RAILS UNDER M.H. FRAME FLANGE TO BE APPROX. 18" FROM ℄'S OF FRAMES.
6. M.H. NUMBER TO BE INSTALLED ON MANHOLE WALL IN CONSPICUOUS PLACE.
7. MOUNTING HEIGHT FOR LOWER BOLTS OF CABLE RACK SHALL BE THE AVERAGE HEIGHT OF THE BOTTOM OF THE LOWEST DUCTS IN MAIN CONDUITS. INSTALL RACKS ON ALL WALLS.
8. 8" THICK BRICK CHIMNEYS WHERE SPECIFIED SHALL BE INCIDENTAL TO APPLICABLE M.H. ITEM.
9. EXCAVATION LIMITS FOR PUBLIC LIGHTING DEPARTMENT MANHOLES SHALL BE ON VERTICAL PLANES ON THE FOOTING OUTLINE.
10. 1/2" PLASTER OUTSIDE WALLS OF BRICK MANHOLES.
11. SPACING OF INSERTS AS REQUIRED TO ACCOMMODATE CABLE RACK.

NOTE

CABLE RACKS SHALL BE GALV. AFTER FAB. IN ACCORDANCE WITH ASTM. A-123.

CABLE ARMS SHALL BE GALV. AFTER FAB IN ACCORDANCE WITH ASTM. A-153 53.

ARMS MUST FIT ON INSIDE & OUTSIDE OF RACKS & MUST ALLOW INSULATOR TO FIT LOOSELY.

USE 1/2" GALV. SUPPORTING BOLTS AND EXPANSION ANCHORS.

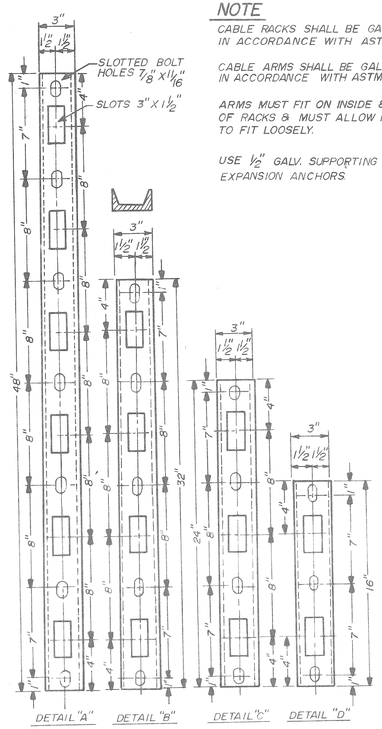

CABLE RACKS
3" STD. 4.1 # CHANNEL
N.T.S.

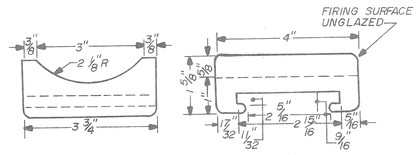

CABLE ARM INSULATORS
WHITE GLAZED PORCELAIN DRY PROCESS
N.T.S.

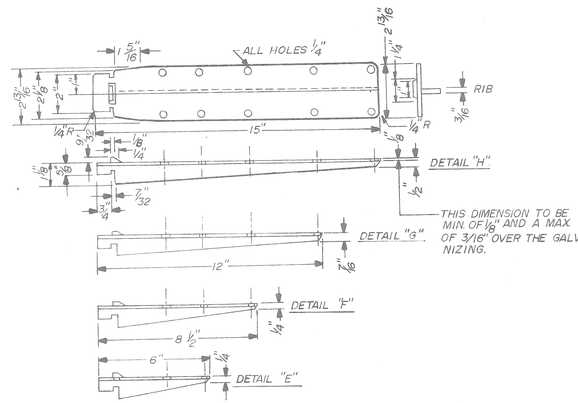

CABLE ARMS
MALLEABLE CAST IRON

CABLE RACKS, CABLE ARMS, AND CABLE ARM INSULATORS

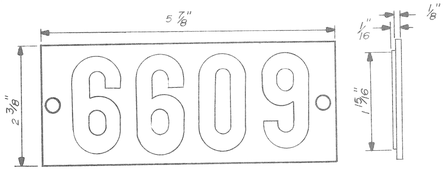

MANHOLE NUMBER DETAIL (LEAD)
N.T.S.

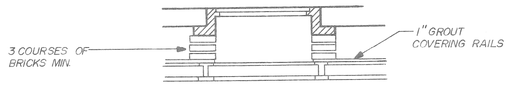

GROUT & BRICK DETAIL

REVISIONS	DATE	DESCRIPTION	CHKD. BY

JEFFERSON/CONNER INDUSTRIAL REVITALIZATION PROJECT
MACK AVENUE LIGHTING
TWO-WAY MANHOLE

DRAWN BY CEA
CHECKED BY
APPROVED BY
DATE AUG. 87

PLAN PREPARED BY
CONSULTING ENGINEERING ASSOCIATES INC.
ENGINEERING CONSULTANTS
16580 WYOMING DETROIT, MICH. 48221
DRAWING NO. 16 OF 40
FILE NO. CEA 1137
CHECKED BY
APPROVED BY

PUBLIC LIGHTING DEPARTMENT
CITY OF DETROIT

FILE NO. 51-0606
SHEET NO. 93 OF 117
DATE AUG. 87

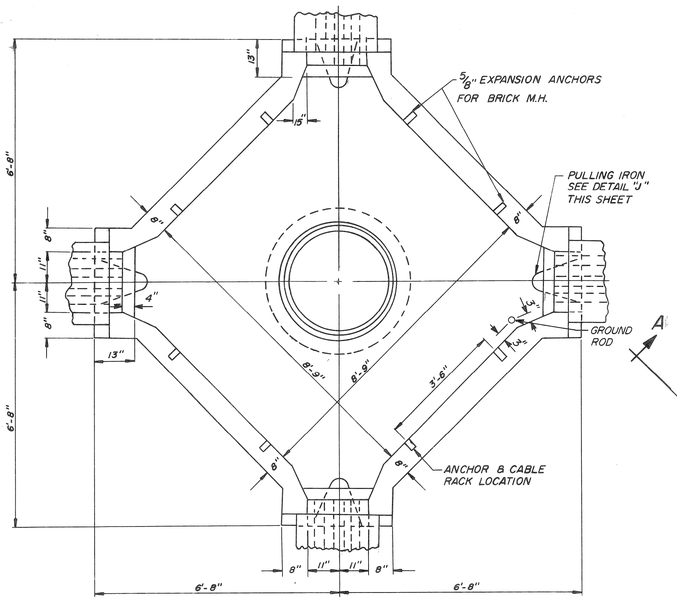

PLAN

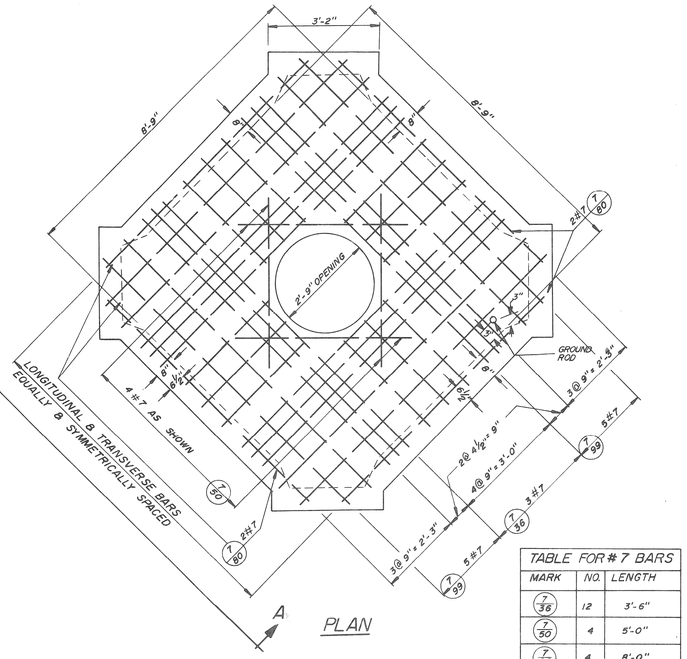

PLAN

TABLE FOR # 7 BARS		
MARK	NO.	LENGTH
7/36	12	3'-6"
7/50	4	5'-0"
7/80	4	8'-0"
7/99	20	9'-9"

NOTE:

CABLE RACKS SHALL BE GALV. AFTER FAB. IN ACCORDANCE WITH ASTM A-123.

CABLE ARMS SHALL BE GALV. AFTER IN ACCORDANCE WITH ASTM. A-153. 53.

ARMS MUST FIT ON INSIDE & OUTSIDE OF RACKS & MUST ALLOW INSULATOR TO FIT LOOSELY.

USE 1/2" GALV. SUPPORTING BOLTS AND EXPANSION ANCHORS.

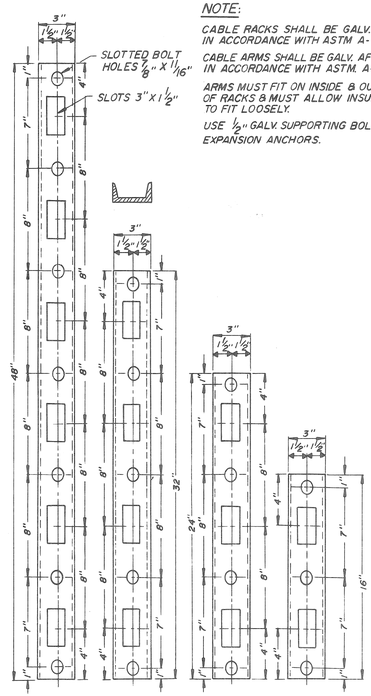

CABLE RACKS

3" STD. 4.1# CHANNEL

N.T.S.

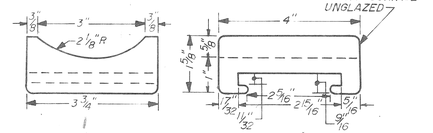

CABLE ARM INSULATORS

WHITE GLAZED PORCELAIN DRY PROCESS

N.T.S.

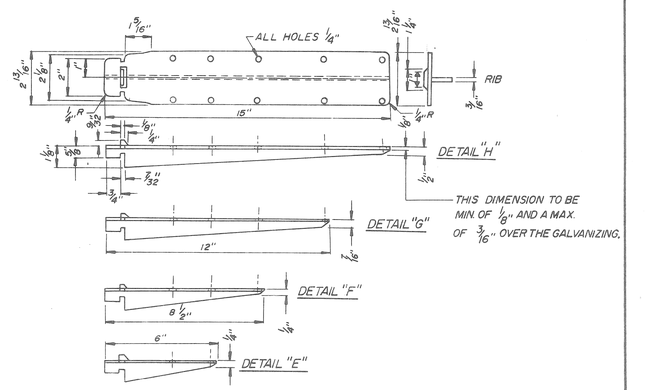

CABLE ARMS

MALLEABLE CAST IRON

N.T.S.

CABLE RACKS, CABLE ARMS, AND CABLE ARM INSULATORS

N.T.S.

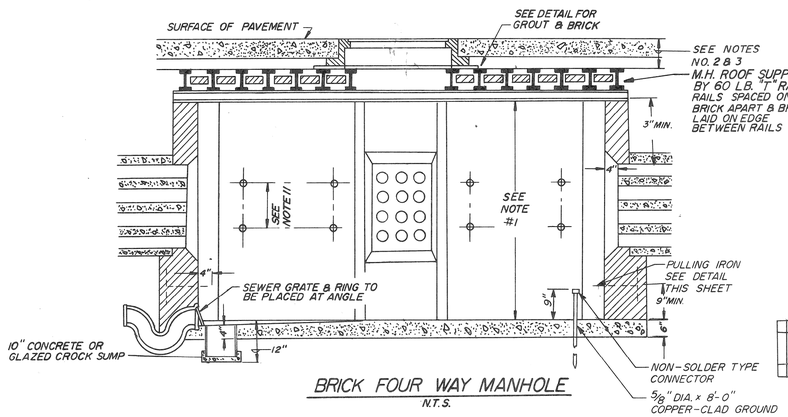

BRICK FOUR WAY MANHOLE

N.T.S.

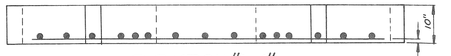

ELEVATION "A-A"

4-WAY MANHOLE ROOF

ALTERNATE CONCRETE

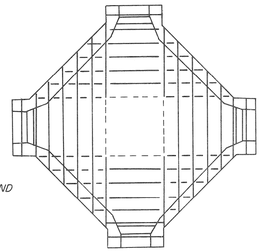

60 LB "T" RAILS	
4 PIECES	12'-6" LONG
4 PIECES	9'-6" LONG
4 PIECES	8'-0" LONG
4 PIECES	6'-6" LONG
4 PIECES	5'-0" LONG
4 PIECES	3'-6" LONG
4 PIECES	3'-0" LONG

"T" RAIL SPECIFICATIONS

60 LBS. PER Y.D. OR HEAVIER

N.T.S.

MANHOLE NUMBER DETAIL (LEAD)

N.T.S.

NOTES:

1. THIS DIMENSION NORMALLY 6'-0" SEE SPECIFICATIONS FOR UNUSUAL CONDITIONS.
2. WHERE M.H.'S ARE LOCATED BACK OF CURBS, TOP OF M.H. MUST BE BUILT 26" BELOW CURB GRADE TO PROVIDE FOR FUTURE PAVEMENT.
3. IN EXISTING PAVEMENT, PROVIDE AT LEAST 8" BETWEEN TOP OF ROOF AND BASE OF PAVEMENT.
4. BOLT, RACKS, & PULLING IRON TO BE HOT-DIP GALV.
5. ℄ OF RAILS UNDER M.H. FRAME FLANGE TO BE APPROX. 18" FROM ℄'S OF FRAME.
6. M.H. NUMBER TO BE INSTALLED ON MANHOLE WALL IN A CONSPICUOUS PLACE.
7. MOUNTING HEIGHT FOR LOWER BOLTS OF CABLE RACK SHALL BE THE AVERAGE HEIGHT OF THE BOTTOM OF LOWEST DUCTS IN MAIN CONDUITS, INSTALLED RACKS ON ALL WALLS.
8. 8" THICK BRICK CHIMNEYS WHERE SPECIFIED SHALL BE INCIDENTAL TO APPLICABLE M.H. ITEM.
9. EXCAVATION LIMITS FOR PUBLIC LIGHTING DEPARTMENT MANHOLES SHALL BE ON VERTICAL PLANES ON THE FOOTING OUTLINE.
10. 1/2" PLASTER OUTSIDE WALLS OF BRICK MANHOLES.
11. SPACING OF INSERTS AS REQUIRED TO ACCOMMODATE CABLE RACK.

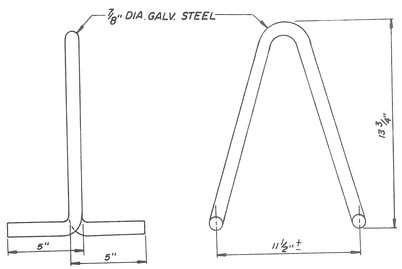

PULLING IRON (BRICK MH.'S).

N.T.S.

DETAIL "J"

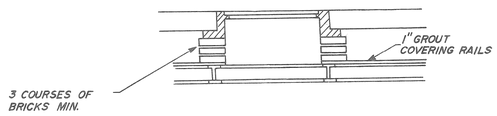

GROUT & BRICK DETAIL

DATE	DESCRIPTION	CHKD. BY

17

JEFFERSON/CONNER INDUSTRIAL REVITALIZATION PROJECT

MACK AVENUE LIGHTING

FOUR-WAY MANHOLE

DRAWN BY CEA.
CHECKED BY
APPROVED BY SJM
DATE AUG. 87

PLAN PREPARED BY
CONSULTING ENGINEERING ASSOCIATES INC.
ENGINEERING CONSULTANTS
16580 WYOMING DETROIT, MICH. 48221

DRWG. NO. 17 OF 40
FILE NO. CEA 1137

CHECKED BY
APPROVED BY

PUBLIC LIGHTING DEPARTMENT
CITY OF DETROIT

FILE NO. 51-0606
SHEET NO. 94 OF 117
DATE AUG. 87

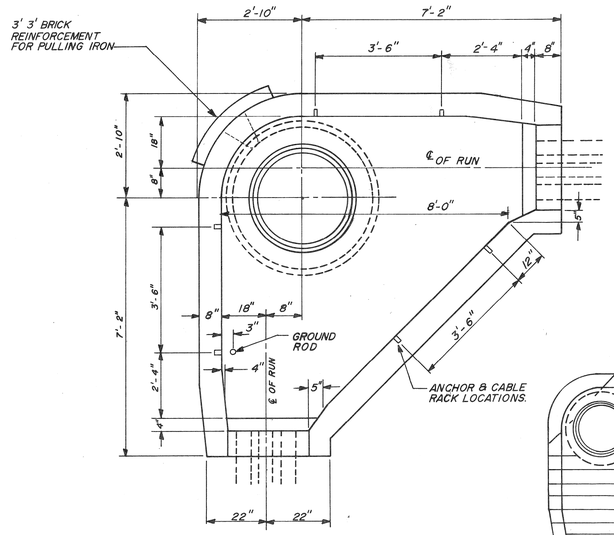

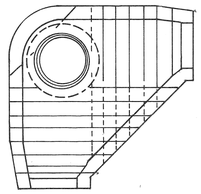

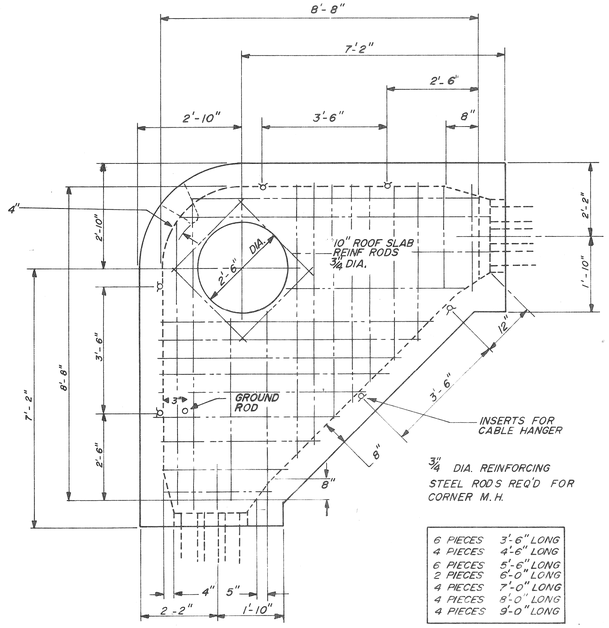

3/4" DIA. REINFORCING STEEL RODS REQ'D FOR CORNER M.H.

6 PIECES	3'-6" LONG
4 PIECES	4'-6" LONG
6 PIECES	5'-6" LONG
2 PIECES	6'-0" LONG
4 PIECES	7'-0" LONG
4 PIECES	8'-0" LONG
4 PIECES	9'-0" LONG

60 LB. "T." RAILS

2 PIECES	4'-6" LONG
1 PIECE	5'-0" LONG
2 PIECES	5'-3" LONG
2 PIECES	6'-3" LONG
2 PIECES	7'-0" LONG
2 PIECES	7'-9" LONG
2 PIECES	8'-6" LONG
2 PIECES	9'-3" LONG
TOTAL WEIGHT 2040 LB.	

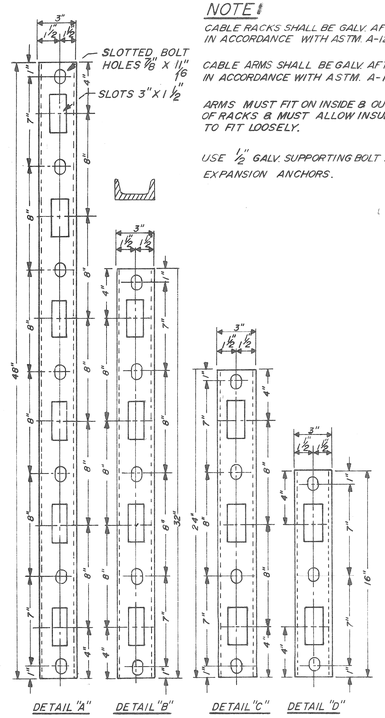
3"
1 1/2"
1 1/2"
SLOTTED BOLT HOLES 7/8" X 1 1/16"
SLOTS 3" X 1 1/2"
7"
8"
8"
8

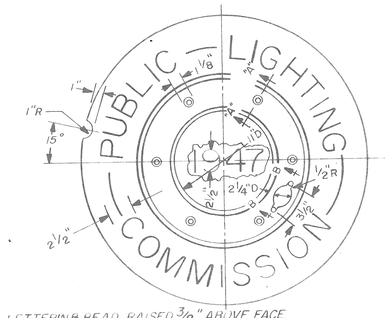

LETTERING & BEAD RAISED ⅜" ABOVE FACE.
YEAR ON COVER TO BE YEAR OF CASTING.
CONTRACTOR TO CHANGE PATTERN IF REQUIRED.

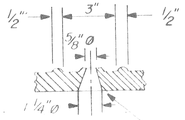

SECTION "A-A"

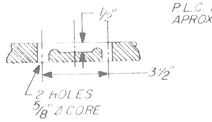

SECTION "B-B"

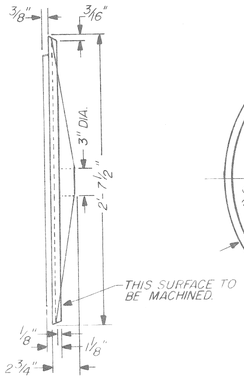

A.S.T.M. CLASS 30 GREY IRON
P.L.C. PATT. NO. 418
APROX. WT - 245 #

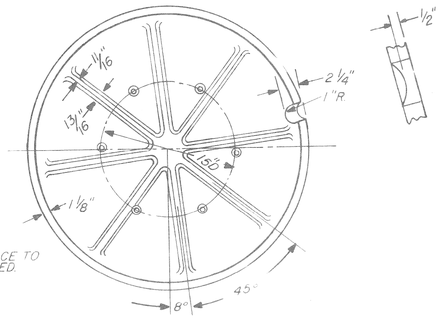

MANHOLE COVER
NTS

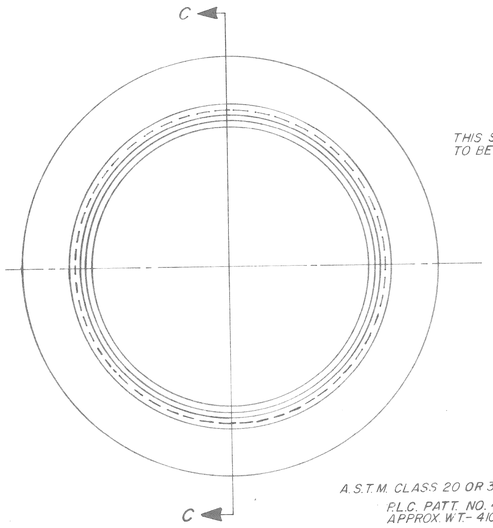

A.S.T.M. CLASS 20 OR 30 GREY IRON
P.L.C. PATT. NO. 417
APPROX. WT - 410#

MANHOLE FRAME
N.T.S.

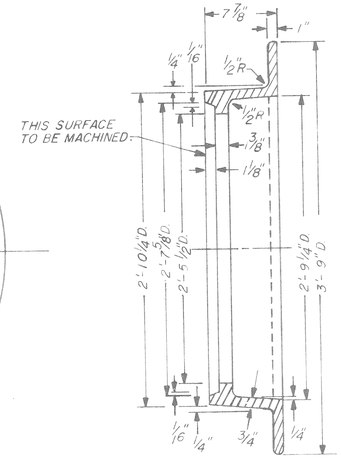

SECTION "C-C"

NOTE:
FRAMES MAY BE A.S.T.M. CLASS 30 GREY IRON IF THE CONTRACTOR SO ELECTS.

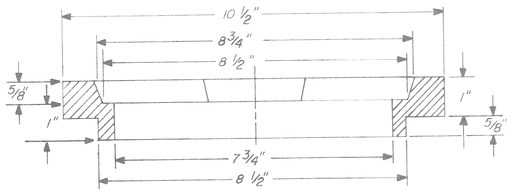

SECTION "D-D"

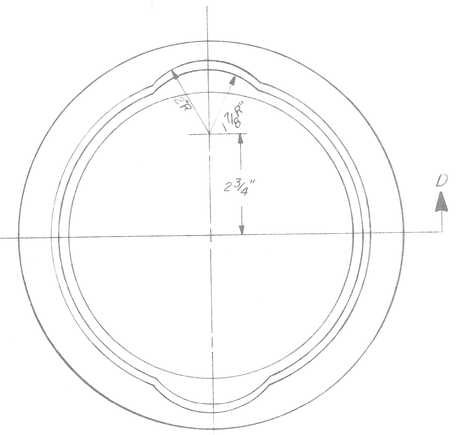

A.S.T.M. CLASS 20 OR 30 GREY IRON
P.L.C. PATT. NO. 318-A
APPROX. WT - 9 #

SEWER RING
N.T.S.

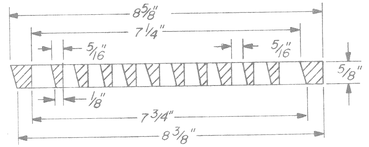

SECTION "E-E"

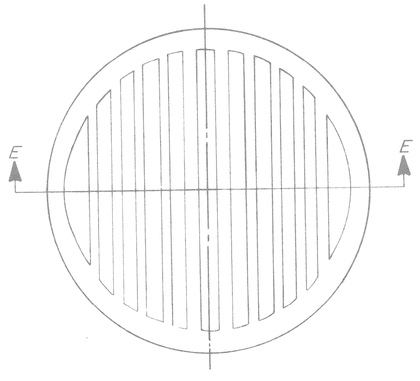

A.S.T.M. CLASS 20 OR 30 GREY IRON
P.L.C. PATT. NO. 318
APPROX. WT - 45#

SEWER GRATE
N.T.S.

108

REVISIONS	DATE	DESCRIPTION	CHKD. BY

JEFFERSON/CONNER INDUSTRIAL REVITALIZATION PROJECT
MACK AVENUE LIGHTING
MANHOLE FRAMES & COVERS — SEWER GRATE & RING DETAILS

DRAWN BY CEA
CHECKED BY
APPROVED BY GM
DATE AUG. 87

PLAN PREPARED BY
CONSULTING ENGINEERING ASSOCIATES INC.
ENGINEERING CONSULTANTS
16580 WYOMING DETROIT, MICH. 48221

DRWG. NO. 19 OF 40
FILE NO. CEA 1137

CHECKED BY
APPROVED BY

PUBLIC LIGHTING DEPARTMENT
CITY OF DETROIT

FILE NO. 51-0606
SHEET NO. 96 OF 117
DATE AUG. 87

K&E 17 0153 8-74 MC 2684-

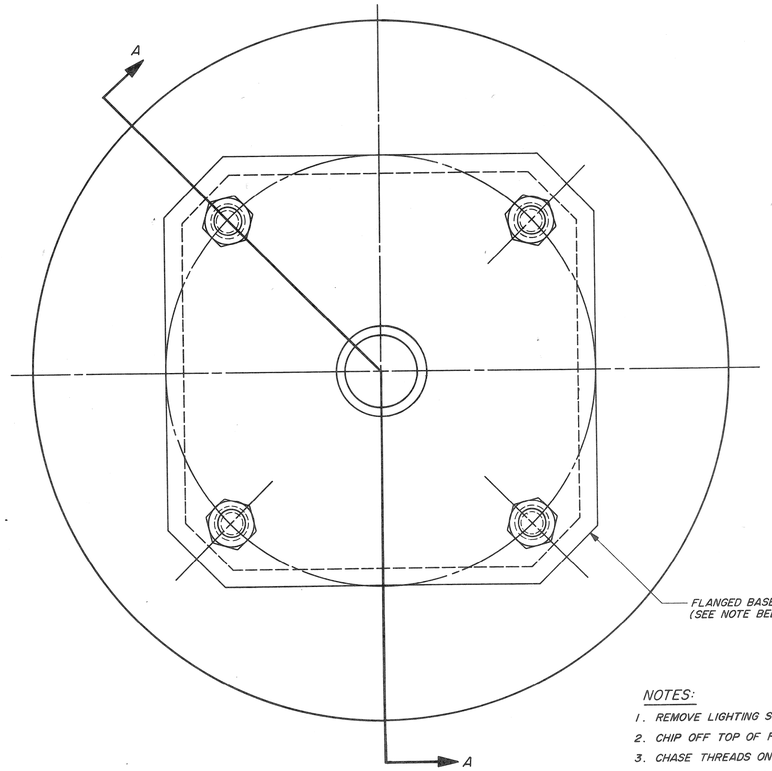

PLAN
FOUNDATION
N.T.S.

NOTE:

THE TOP OF FOUNDATION SHALL EXTEND 1" BEYOND THE CAST FLANGED BASE OF THE STREET LIGHTING STANDARD.

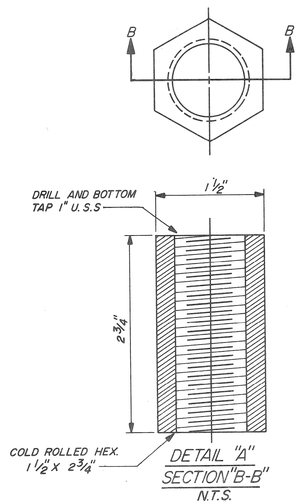

DETAIL "A"
SECTION "B-B"
N.T.S.

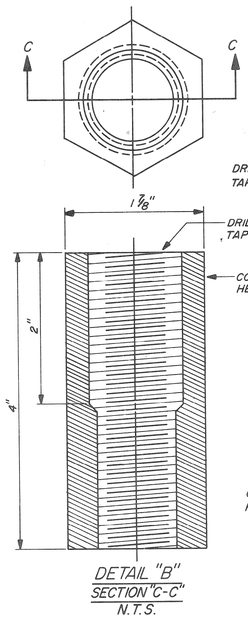

DETAIL "B"
SECTION "C-C"
N.T.S.

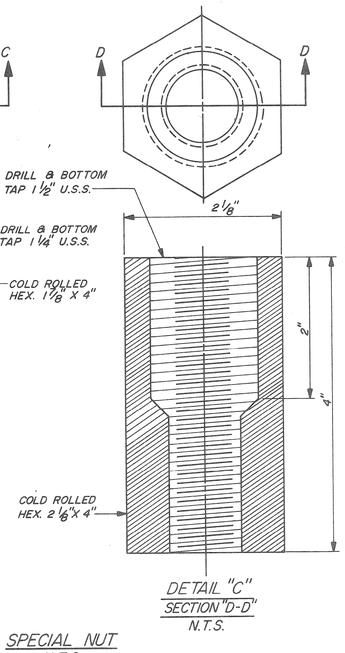

DETAIL "C"
SECTION "D-D"
N.T.S.

SPECIAL NUT
N.T.S.

NOTES:

1. REMOVE LIGHTING STANDARD.
2. CHIP OFF TOP OF FOUNDATION. (SEE DRWG.)
3. CHASE THREADS ON FOUNDATION BOLTS 1 3/8".
4. EXTEND CONDUIT (SEE DRWG.)
5. INSTALL SPECIAL NUTS (SHOWN IN DETAIL). THREADED STUDS AND BEARING NUTS.
6. COAT TOP OF FOUNDATION WITH A BONDING AGENT.
7. MOUNT THE FORM AND POUR THE CONCRETE.
8. COAT BOLTS AND NUTS WITH "NO-OX-10" GREASE.

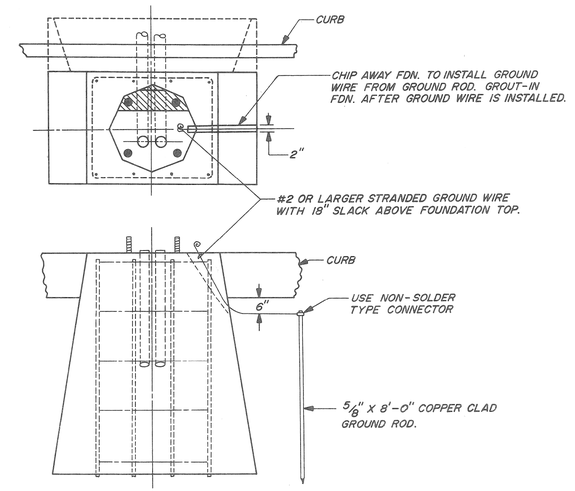

DETAIL "D"
GROUND ROD INSTALLATION FOR EXISTING FOUNDATION
N.T.S.

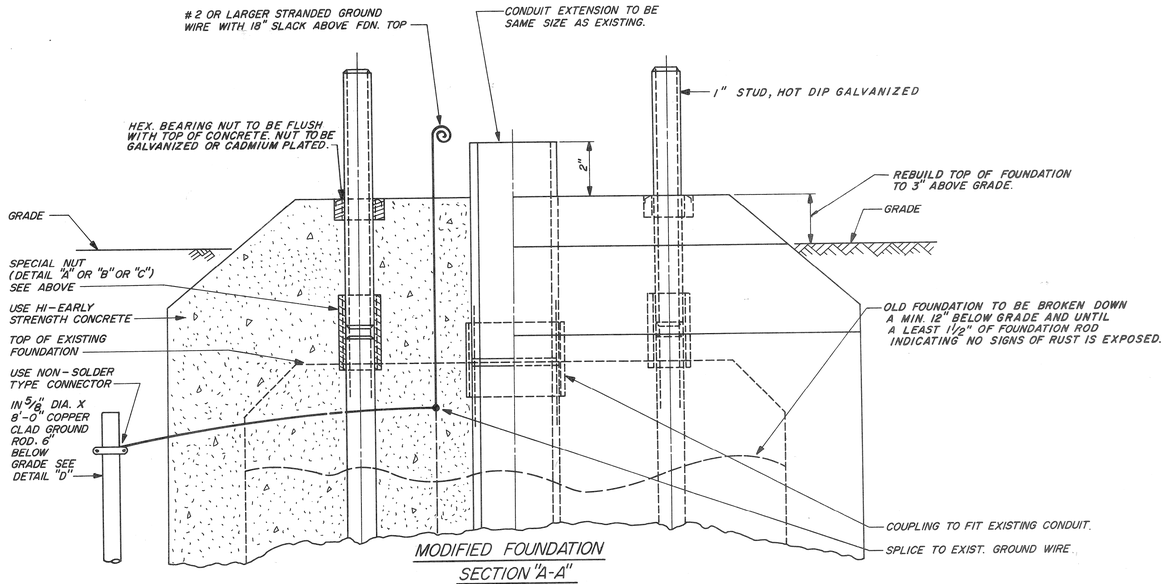

MODIFIED FOUNDATION
SECTION "A-A"
N.T.S.

110

DATE	DESCRIPTION	CHKD. BY
11-3-86	CHANGED FOUNDATION TOP.	

8

JEFFERSON-CONNER INDUSTRIAL REVITALIZATION PROJECT

MACK AVE. LIGHTING
FOUNDATION MODIFICATION
DETAILS

DRAWN BY CEA	PLAN PREPARED BY CONSULTING ENGINEERING ASSOCIATES INC. ENGINEERING CONSULTANTS		PUBLIC LIGHTING DEPARTMENT CITY OF DETROIT
CHECKED BY	16580 WYOMING DETROIT, MICH. 48221	CHECKED BY	FILE NO. 51-0606
APPROVED BY		APPROVED BY	SHEET NO. 97 OF 117
DATE AUG. 87	DRWG. NO. 20 OF 40 / FILE NO. CEA 1137		DATE AUG. 87

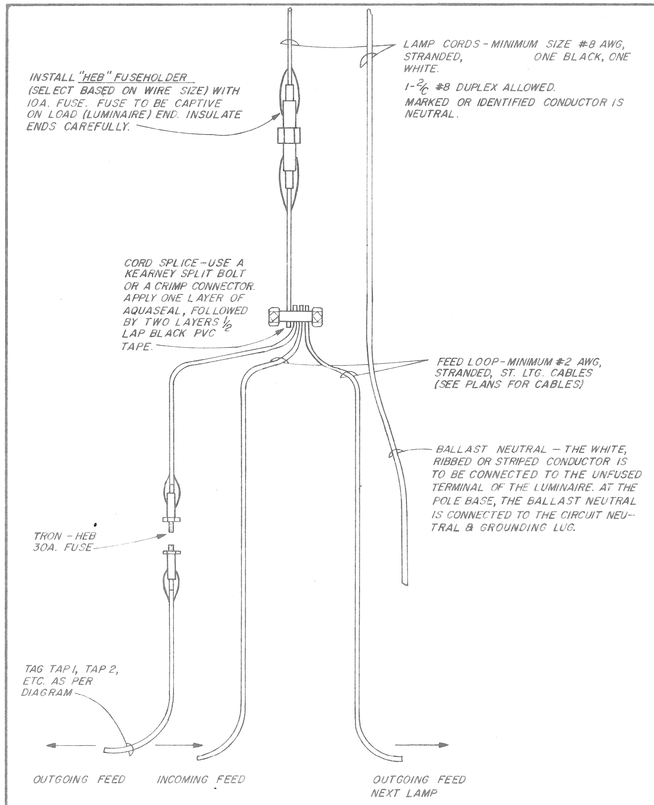

MULTIPLE STREET LIGHTING CONNECTION IN POLE BASE

N.T.S.

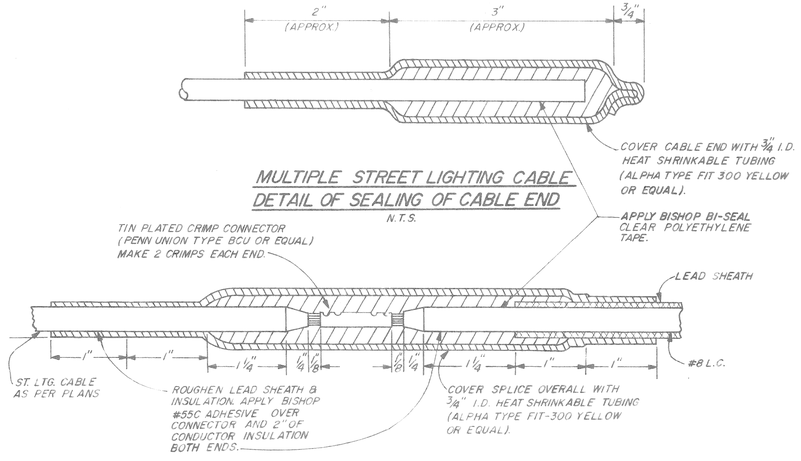

MULTIPLE STREET LIGHTING CABLE DETAIL OF SEALING OF CABLE END

N.T.S.

MULTIPLE STREET LIGHTING SPLICE DETAIL "A"

#8 L.C. TO #2 ST. LTG.

N.T.S.

SUBSTATION NAMES ON IDENTIFICATION TAGS SHALL BE SPELLED AS FOLLOWS

	MCRDY.
BI.	MTRSE.
BUTZL.	PAL. PK.
CNFLD.	PHILP.
CONNR.	PORTER.
CUSTER.	STNTN.
GRNFD.	STONE
HUDSN.	TRNTY.
J. CAMP.	
JOY RD.	TUHNK.
L.A. BEL.	
LTHRP.	WALTN.
LUDDN.	WARRN.
MAPLE.	WD. TER.

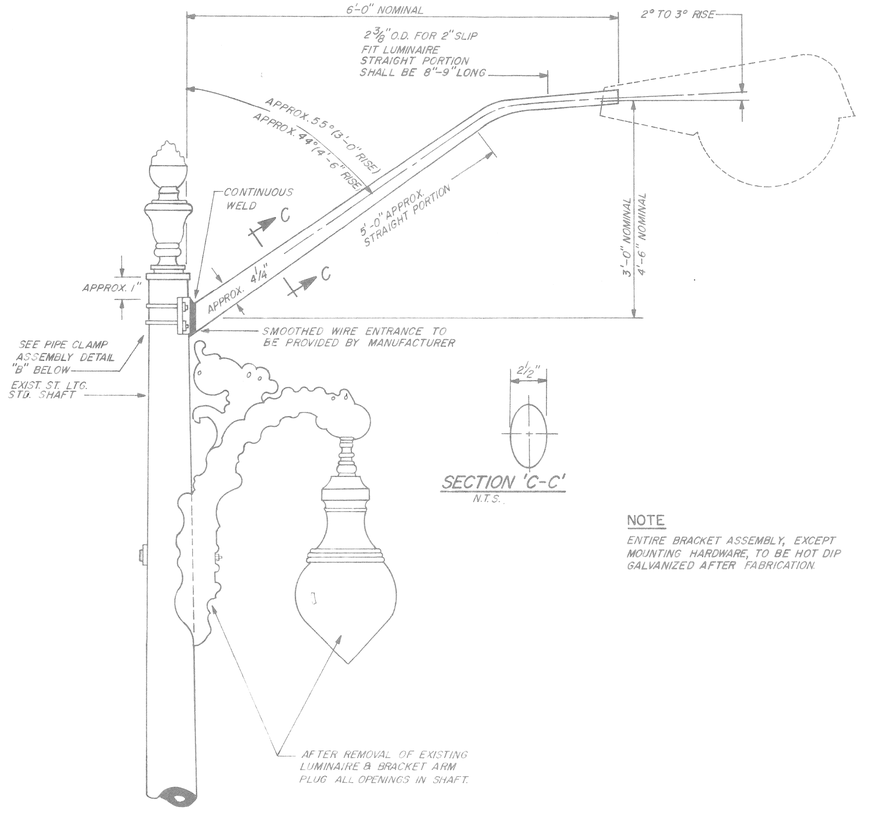

CLAMP ON BRACKET ARM ELEVATION

N.T.S.

SECTION 'C-C'

N.T.S.

NOTE

ENTIRE BRACKET ASSEMBLY, EXCEPT MOUNTING HARDWARE, TO BE HOT DIP GALVANIZED AFTER FABRICATION.

TYPE	POLE DIAMETER
A	3.6"-4.5"
B	6.1"-6.9"
C	7.5"-8.5"
D	

CLAMP SIZE TABLE

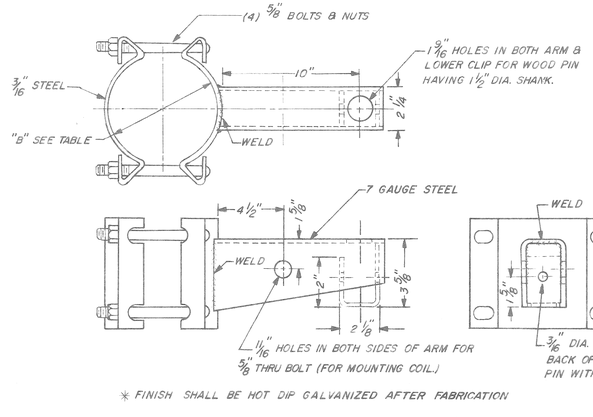

* FINISH SHALL BE HOT DIP GALVANIZED AFTER FABRICATION

CLAMP FEEDER ARM

N.T.S.

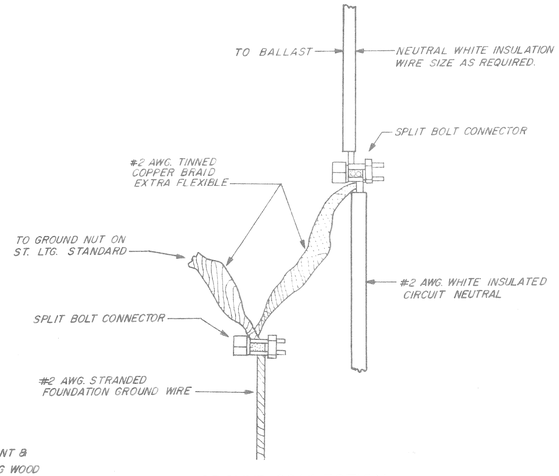

GROUND CONNECTION

N.T.S.

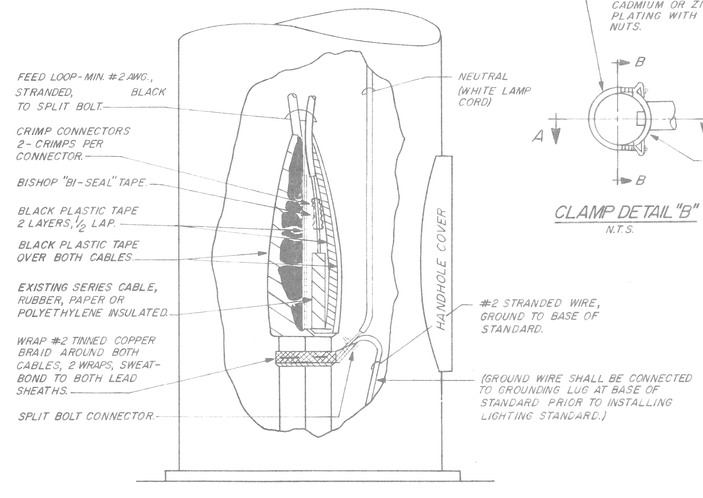

SERIES-TO-MULTIPLE LIGHTING CONVERSION POLE BASE CONNECTIONS

N.T.S.

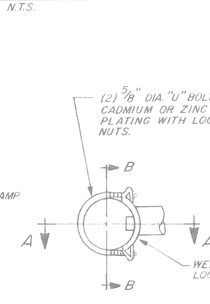

CLAMP DETAIL "B"

N.T.S.

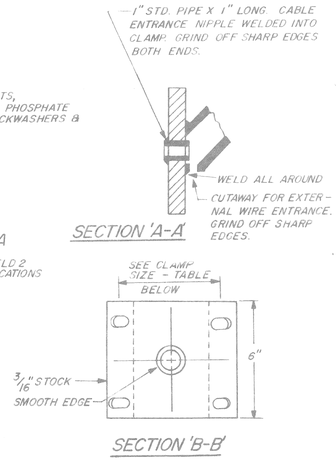

TYPE	POLE DIAMETER
A	3.6" - 4.5"
B	6.1" - 6.9"
C	7.5" - 8.5"

CLAMP SIZE TABLE

REVISIONS	DATE	DESCRIPTION	CHKD. BY

JEFFERSON/CONNER INDUSTRIAL REVITALIZATION PROJECT

MACK AVENUE LIGHTING

MULT. ST. LTG. CABLE CONNECTIONS, CLAMP-ON ARM & MISC. DETAILS

DRAWN CEA	PLAN PREPARED BY CONSULTING ENGINEERING ASSOCIATES INC. ENGINEERING CONSULTANTS 16580 WYOMING DETROIT, MICH. 48221		PUBLIC LIGHTING DEPARTMENT CITY OF DETROIT	FILE NO. 51-0606
CHECKED		CHECKED BY		SHEET NO. 98 OF 117
APPROVED		APPROVED BY		DATE AUG. 87
DATE AUG. 87	DRWG. NO. 21 OF 40	FILE NO. CEA 1137		

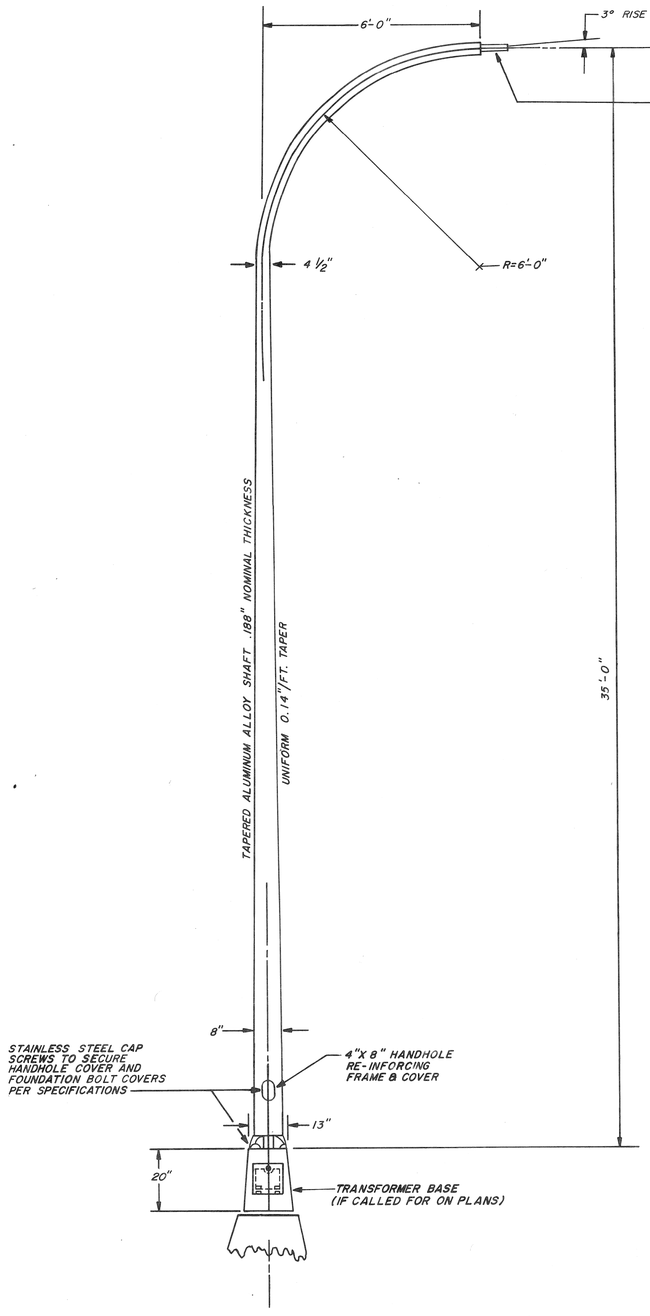

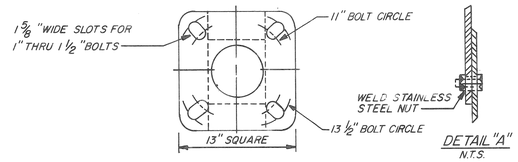

DETAIL "A"
N.T.S.

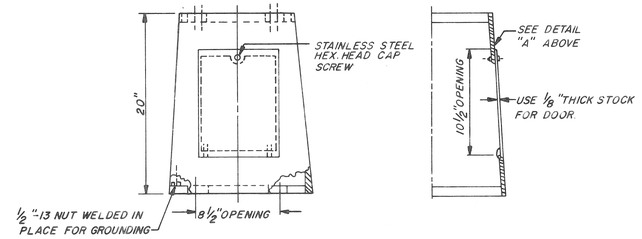

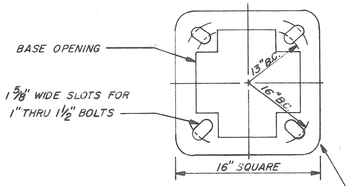

NOTES

MATERIALS

1. TOP, BOTTOM & SIDES TO BE GALVANIZED STEEL AS PER MANUFACTURER.
2. DOOR FASTENING SCREW TO BE ASTM SERIES 300 STAINLESS STEEL MIN. 1/4"-20 NC. HEX. HEAD CAP SCREW ONLY.
3. THE DOOR FASTENING METHOD SHALL USE ONLY ONE HEX. HEAD CAP SCREW, SERIES 300 STAINLESS STEEL. MULTIPLE SCREWS WILL NO LONGER BE ALLOWED TO INSURE PROPER FIELD INSTALLATION AND OPERATION.

P.L.D. UNIVERSAL GALVANIZED STEEL TRANSFORMER BASE
N.T.S.

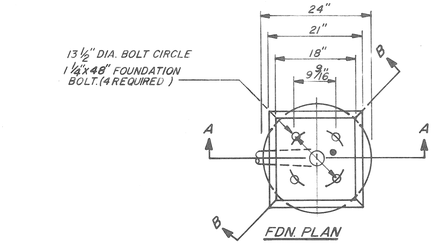

FDN. PLAN

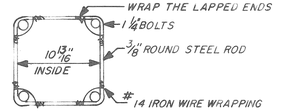

DETAIL-"C"
FOUNDATION BOLT TIE ROD

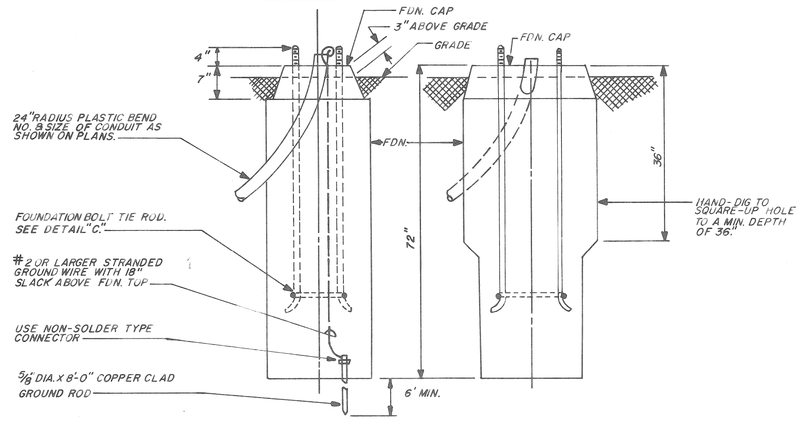

SECTION A-A SECTION B-B

ANCHOR BASE STD. FOUNDATION

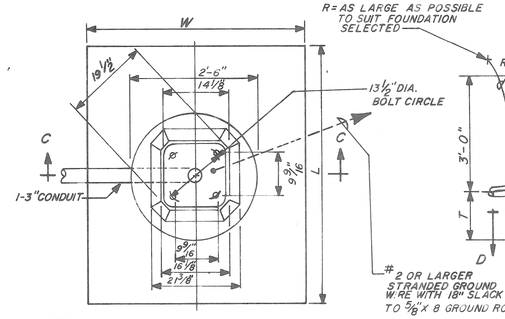

FDN. & CAP PLAN

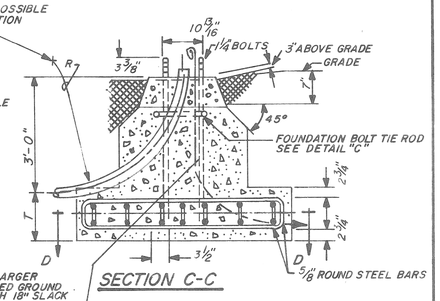

SECTION C-C

L	W	T
5'-0"	4'-3"	1'-0"
4'-6"	3'-6"	1'-6"

PLAN OF BASE PLATE

GENERAL SHAPE OF SHIM

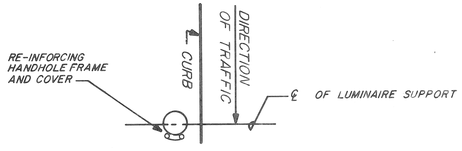

LOCATION OF HANDHOLE
(EXCEPT WHERE OTHERWISE SHOWN ON PLANS)

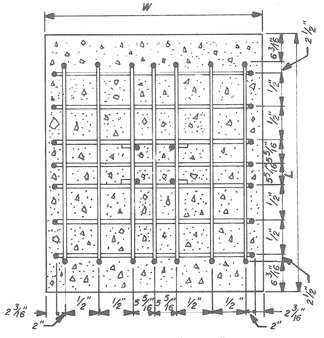

SECTION AT "D-D"

SPECIAL FOUNDATION
N.T.S.

THERE SHALL BE NO EXTRA PAYMENT FOR SPECIAL FDN.

(TO BE PAID FOR AS A NORMAL ST. LTG. STD. FDN. INSTALLATION)

116

REVISIONS	DATE	DESCRIPTION	CHKD. BY

JEFFERSON-CONNER INDUSTRIAL REVITALIZATION PROJECT

MACK AVE. LIGHTING

CODE 118-06 ALUMINUM ST. LTG. STD. DETAILS

DRAWN C.E.A.	PLAN PREPARED BY CONSULTING ENGINEERING ASSOCIATES INC. ENGINEERING CONSULTANTS 16580 WYOMING DETROIT, MICH. 48221		PUBLIC LIGHTING DEPARTMENT CITY OF DETROIT
CHECKED		CHECKED BY	FILE NO. 51-0606
APPROVED SM		APPROVED	SHEET NO. 99 OF 117
DATE AUG. 87	DRWG. NO. 22 OF 40 / FILE NO. CEA 1137		DATE AUG. 87

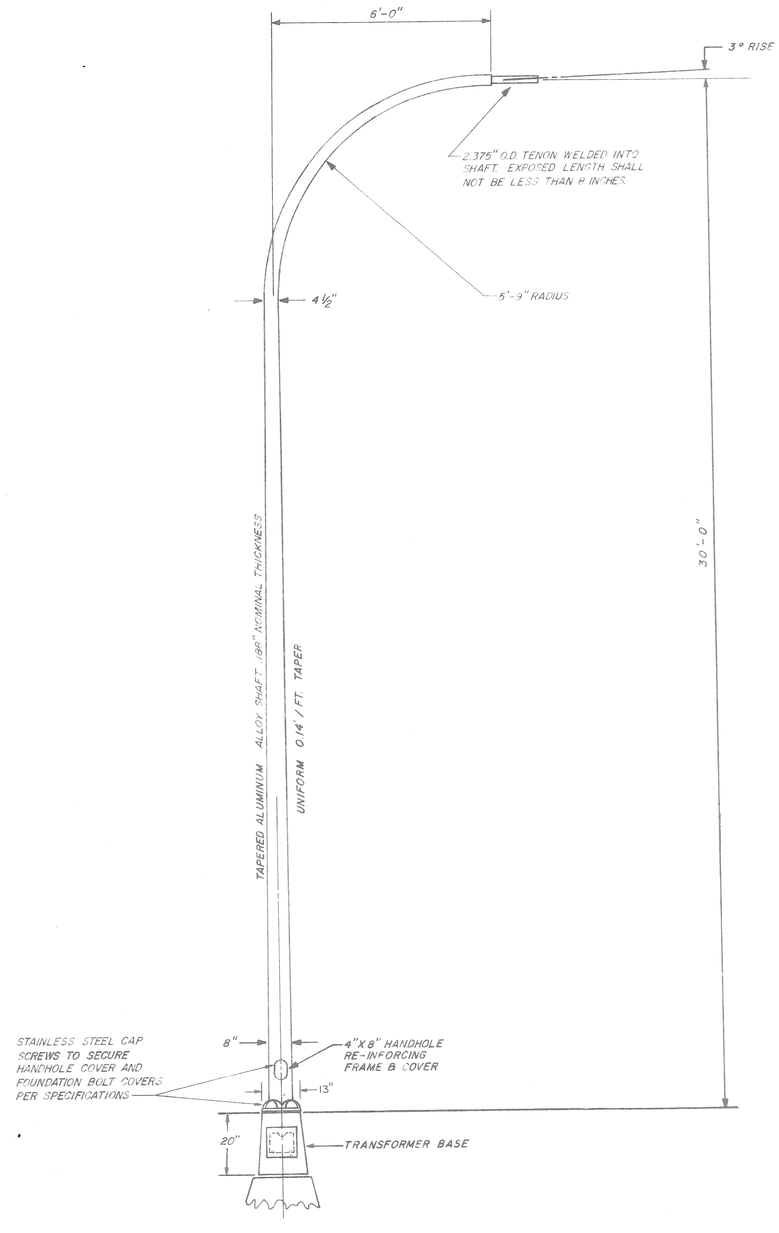

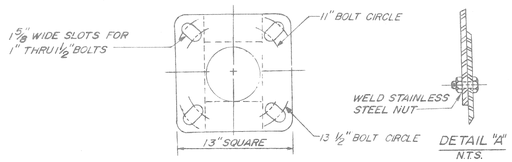

DETAIL "A"
N.T.S.

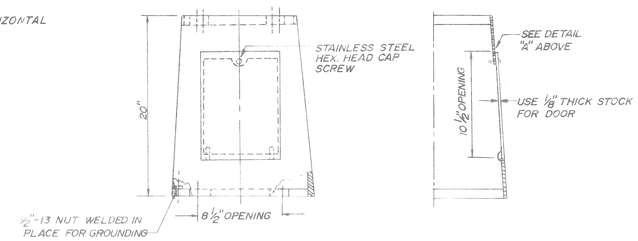

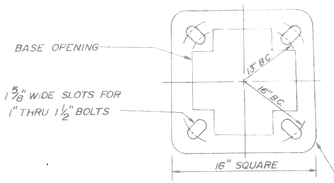

NOTES:
MATERIALS

1. TOP, BOTTOM & SIDES TO BE GALVANIZED STEEL AS PER MANUFACTURER.
2. DOOR FASTENING SCREW TO BE ASTM SERIES 300 STAINLESS STEEL MIN. ¼"-20 NC. HEX. HEAD CAP SCREW ONLY.
3. THE DOOR FASTENING METHOD SHALL USE ONLY ONE HEX. HEAD CAP SCREW, SERIES 300 STAINLESS STEEL. MULTIPLE SCREWS WILL NO LONGER BE ALLOWED TO INSURE PROPER FIELD INSTALLATION AND OPERATION.

P.L.D. UNIVERSAL GALVANIZED STEEL TRANSFORMER BASE
N.T.S.

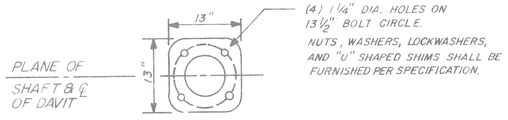

PLAN OF BASE PLATE

GENERAL SHAPE OF SHIM

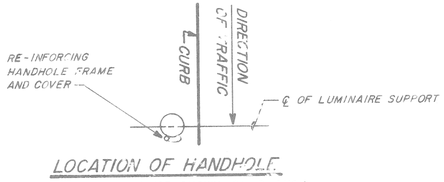

LOCATION OF HANDHOLE
(EXCEPT WHERE OTHERWISE SHOWN ON PLANS)

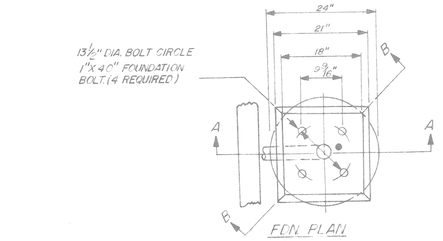

FDN. PLAN

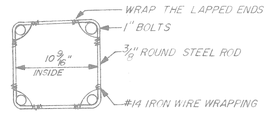

DETAIL-"C"
FOUNDATION BOLT TIE ROD

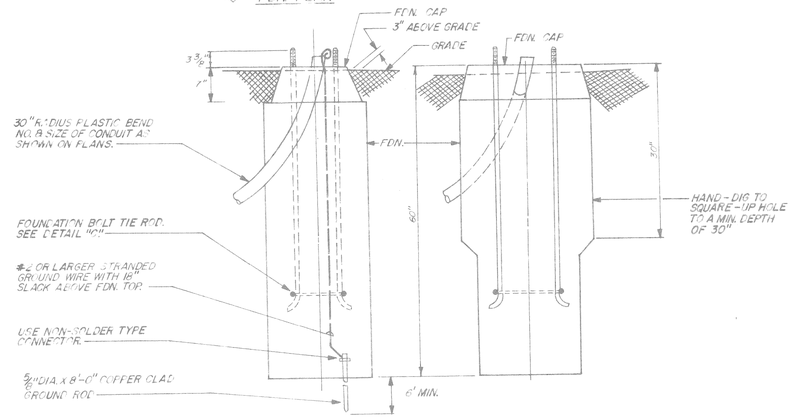

SECTION A-A SECTION B-B

ST. LTG. STD. FOUNDATION
N.T.S.

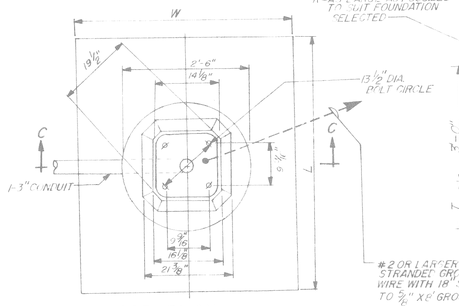

FDN. & CAP PLAN

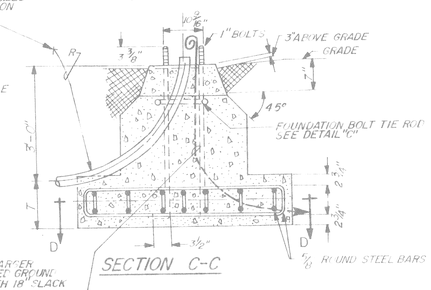

SECTION C-C

L	W	T
5'-0"	4'-3"	1'-0"
4'-6"	3'-6"	1'-6"

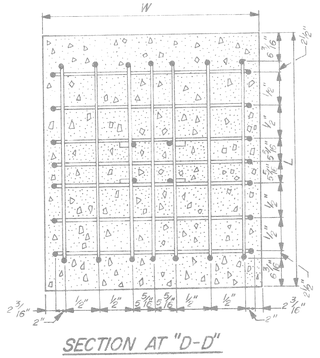

SPECIAL FOUNDATION
N.T.S.

THERE SHALL BE NO EXTRA PAYMENT FOR SPECIAL FDN.
(TO BE PAID FOR AS A NORMAL ST. LTG. STD. FDN. INSTALLATION)

SECTION AT "D-D"

121

REVISIONS DATE	DESCRIPTION	CHKD. BY

JEFFERSON/CONNER INDUSTRIAL REVITALIZATION PROJECT
MACK AVENUE LIGHTING
CODE 010-06 ALUMINUM ST. LTG. STD. DETAILS

DRAWN CEA	PLAN PREPARED BY CONSULTING ENGINEERING ASSOCIATES INC. ENGINEERING CONSULTANTS 16580 WYOMING DETROIT, MICH. 48221	CHECKED BY	PUBLIC LIGHTING DEPARTMENT CITY OF DETROIT
CHECKED			
APPROVED SM		APPROVED BY	
DATE AUG. 87	DRWG. NO. 23 OF 40 FILE NO. CEA 1137		

FILE NO. 51-0606
SHEET NO. 100 OF 117
DATE AUG. 87

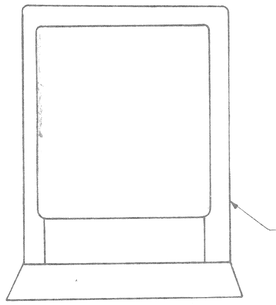

VENTED ALUMINUM CABINET WITH BASE MOUNTING SHALL BE 34"W. X 17"D. X 48"H. CABINET CONSTRUCTION SHALL BE IN ACCORDANCE WITH THE SPECIFICATION FOR TRAFFIC SIGNAL CONTROLLER CABINET CONSTRUCTION.

MULT. ST. LTG. CONTROL CABINET
N.T.S.

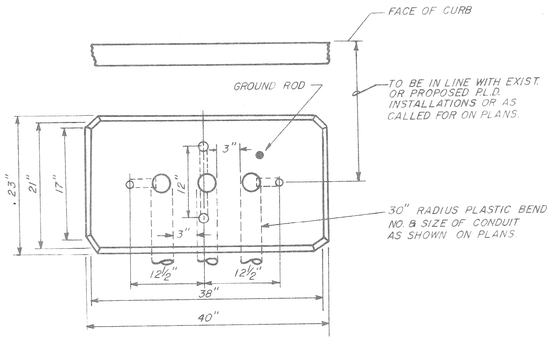

PLAN

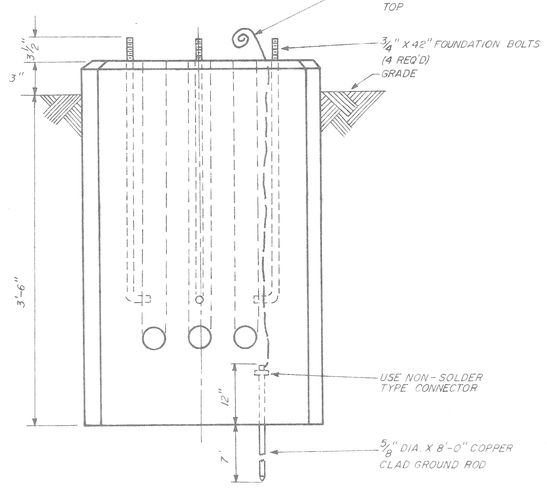

ELEVATION
FOUNDATION FOR MULT. ST. LTG. CONTROL CABINET
N.T.S.

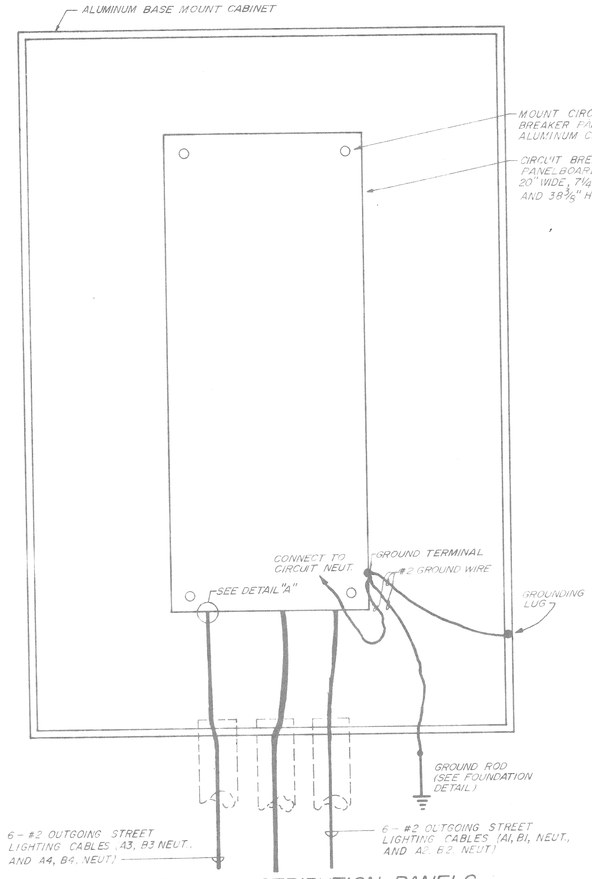

MULT ST. LTG. DISTRIBUTION PANELS
N.T.S.

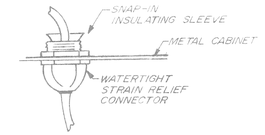

DETAIL "A"
TYPICAL - EACH CABLE

PRIOR TO FABRICATING THE CIRCUIT BREAKER PANEL BOARD AND BOX WITH ASSOCIATED LUGS, BREAKERS ETC., SUBMIT TO THE P.L.D. THE DETAILED SHOP DRAWING INDICATING THE TYPE OF ALUMINUM CABINET, INTERIOR MOUNTING CHANNEL, MOUNTING OF CIRCUIT BREAKER BOX, WIRING AND NECESSARY HARDWARE FOR A COMPLETE ASSEMBLY. THE P.L.D. MAY REQUIRE DEVIATIONS TO THE SUBMITTED SHOP DRAWING AND P.L.D. REQUESTED CHANGES SHALL BE DONE WITH NO ADDITIONAL COST TO THE CONTRACT.

NOTES:

LIGHTING PANEL BOARD SHALL BE CIRCUIT BREAKER TYPE. RATED 480 V.A.C. MINIMUM, 225 AMP MAIN LUGS, SINGLE PHASE, 3-WIRE, SOLID NEUTRAL, NEMA TYPE 3R WEATHERPROOF ENCLOSURE.

BRANCH CIRCUIT BREAKERS SHALL BE 50 AMP., TYPE NEF THERMAL - MAGNETIC BREAKERS, 1 POLE WITH MINIMUM INTERRUPTING CAPACITY OF 14,000 RMS SYMMETRICAL AMPERES AT 240 VOLTS.

THE CIRCUIT BREAKER BOX SHALL BE MINIMUM 20" WIDE, 7 ¼" DEEP AND 38⅜" HIGH. THE SIDE AND BOTTOM GUTTERS SHALL BE ADEQUATE TO ACCOMMODATE THE 3-#2/0 INCOMING CABLES AND 12-#2 OUTGOING CIRCUIT CABLES.

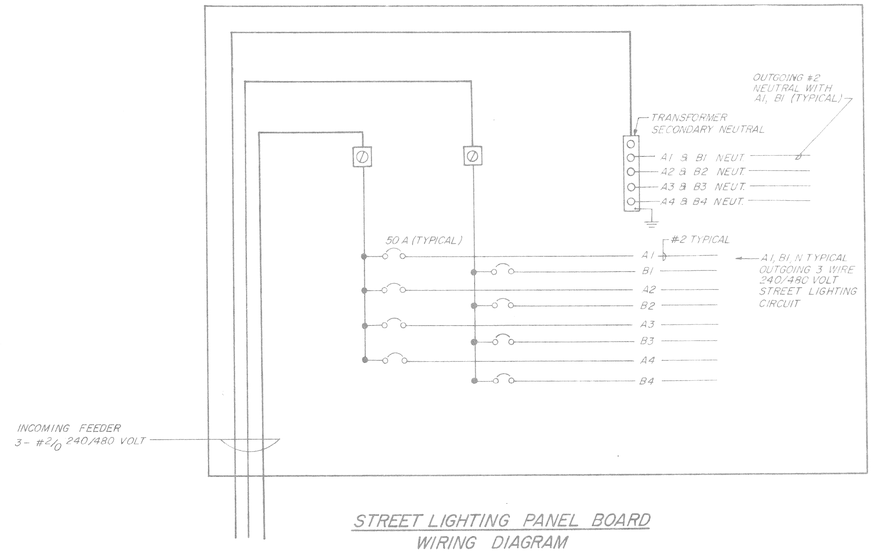

STREET LIGHTING PANEL BOARD
WIRING DIAGRAM

REVISIONS	DATE	DESCRIPTION	CHKD. BY

JEFFERSON/CONNER INDUSTRIAL REVITALIZATION PROJECT
MACK AVENUE LIGHTING
MULT. ST. LTG. CONTROL CABINET (240/480V.)

DRAWN CEA	PLAN PREPARED BY CONSULTING ENGINEERING ASSOCIATES INC. ENGINEERING CONSULTANTS 16580 WYOMING DETROIT, MICH. 48221		PUBLIC LIGHTING DEPARTMENT CITY OF DETROIT	FILE NO. 51-0606
CHECKED		CHECKED BY		SHEET NO. 101 OF 117
APPROVED	DRWG. NO. 24 OF 40	FILE NO. CEA 1137	APPROVED	DATE AUG. 87
DATE AUG. 87				

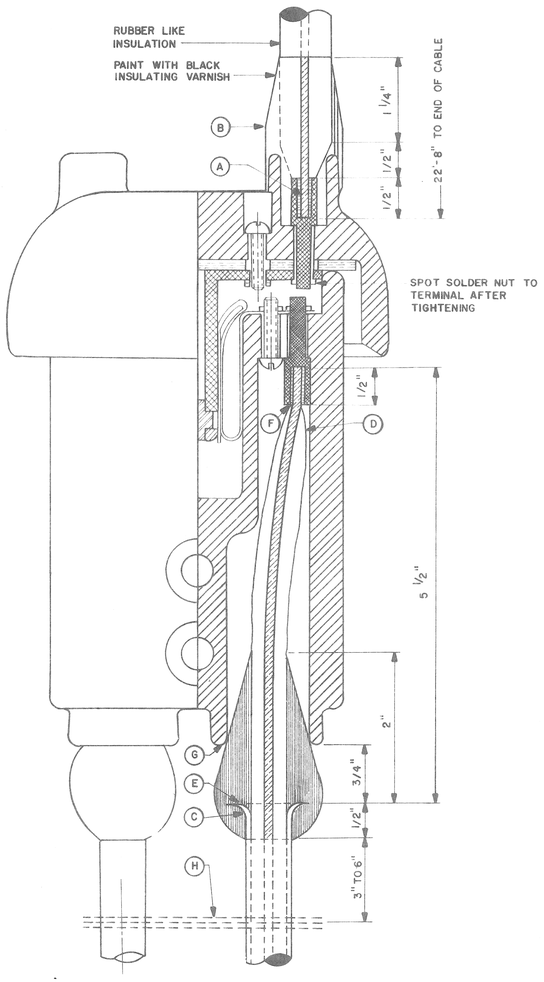

CONNECTION FOR SERIES CUTOUT
N.T.S.

A- SWEAT TERMINAL & PENCIL RUBBER INSULATION TO FIT SNUGLY IN PORCELAIN CAP OPENING SO THAT THE CONNECTOR NUT IS TIGHTENED, THE OPENING IS COMPLETELY & TIGHTLY FILLED.
B- BUILD UP WITH #1 TAPE AS SHOWN, & COVER WITH 2 LAYERS, HALF LAP, WITH #2 TAPE. PAINT WITH ONE COAT OF BLACK INSULATING VARNISH.
C- USE TUBE CUTTER TO SCORE LEAD SHEATH & CHIP OFF WITH CHIPPING IRON. DO NOT BREAK OFF BY BENDING.
D- CUT INSULATION & PENCIL SMOOTHLY.
E- BELL LEAD SHEATH. REMOVE TAPE COMPLETELY, INCLUDING AS MUCH AS CAN BE REMOVED INSIDE OF BELL. FILL SHEATH CAVITY WITH RUBBER CEMENT.
F- SWEAT CONDUCTOR INTO TERMINAL.
G- APPLY TAPE #1 OVER BELL AS SHOWN TO FORM A TIGHT FIT BETWEEN INSULATION AND PORCELAIN AT "G" WHEN NUT IS TIGHTENED. COVER TAPE #1 WITH 2 LAYERS OF TAPE #2 APPROX. 3/4" FROM END OF TAPE #1.
H- #18 SERVICE WIRE OR BRAID 4 WRAPS BETWEEN CABLES & SWEATED TO LEAD SHEATH FOR BOND TIE TO GROUND WIRE.

NOTES:
1. FOR PARKWAY CABLE, STRIP JUTE & STEEL TAPE DOWNWARD TO DUCT ENTRANCE.
2. THE CONTRACTOR SHALL SUBMIT TO THE ENGINEER FOR APPROVAL A LIST OF ALL SPLICING MATERIALS HE PROPOSES TO USE WITH SUPPORTING DATA THAT THE MATERIAL IS SUITABLE FOR THE APPLICATION AS SHOWN ON THE DRAWINGS.

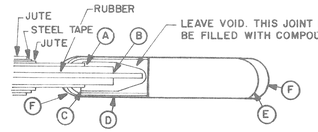

#8 LIGHTING CABLE DEAD END CAP

A- SCORE LEAD SHEATH WITH TUBE CUTTER & CHIP OFF WITH CHIPPING IRON. DO NOT BREAK OFF BY BENDING.
B- CUT INSULATION
C- OVERLAP WITH TAPE #2 APPROXIMATELY 1/4" FROM END OF LEAD OF LEAD SHEATH, AT LEAST 2 LAYERS OF TAPE AT THIS POINT.
D- 1 1/4" x 8" x 1/8" LEAD SLEEVE
E- SHAPE AND BEAT LEAD SLEEVE TO FORM A CLOSED END.
F- CADMIUM ALLOY WIPING METAL. DO NOT POUR METAL FOR WIPE. USE TORCH AND FINGER WIPE WITH MINIMUM OF HEAT.

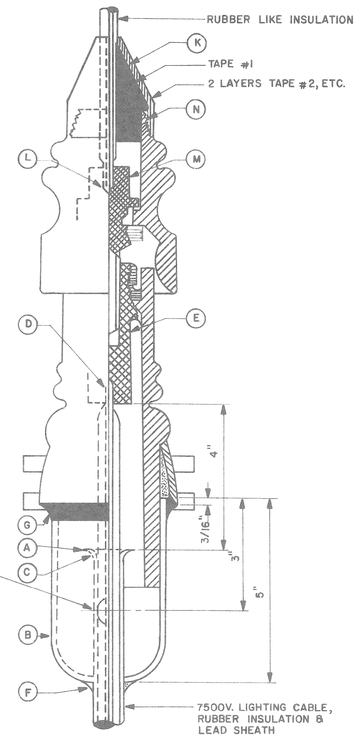

CONNECTIONS FOR I/C 7500V. POTHEAD
N.T.S.

A- USE TUBE CUTTER TO SCORE LEAD SHEATH AND CHIP OFF WITH CHIPPING IRON. DO NOT BREAK OFF BY BENDING 4" OF INSULATION TO REMAIN, NOT INCLUDING BARED CONDUCTOR.
B- FORM BOTTOM OF EMBOSSED SLEEVE & SLIP OVER CABLE, HOLE IN FRONT.
C- BELL LEAD SHEATH, REMOVE TAPE FROM INSULATION, INCLUDING AS MUCH AS POSSIBLE FROM WITHIN BELLED SHEATH.
D- SWEAT CONDUCTOR INTO TERMINAL & PENCIL INSULATION SMOOTHLY FOR 3/4".
E- MOUNT TERMINAL FIRMLY INTO PORCELAIN.
F- PUSH SLEEVE INTO CAST IRON COLLAR AND WIPE SMOOTHLY TO LEAD SHEATH.
G- INVERT & FILL JOINT BETWEEN IRON COLLAR AND SLEEVE WITH EPOXY RESIN.
H- LAY POTHEAD HORIZONTAL & FILL COMPLETELY WITH APPROVED COMPOUND.
I- INSERT LEAD PLUG INTO EMBOSSED HOLE, TAP FLUSH & FILL WITH LEAD.
J- TRAIN CABLE & MOUNT POTHEAD ON CROSS ARM.
K- SLIP THE CONE SHAPED RUBBER BUSHING ON THE RUBBER INSULATED CABLE RISER.
L- SWEAT CONDUCTOR INTO TERMINAL FIRMLY INTO THE POTHEAD CAP.
M- MOUNT THE TERMINAL FIRMLY INTO THE POTHEAD CAP.
N- BUILD UP WITH TAPE #1 AND CARRY 2 LAYERS OVER THE CAP TO POINT "N" AS SHOWN. COVER WITH 2 LAYERS TYPE #2 - HALF LAP. PAINT WITH BLACK INSULATION VARNISH.

MATERIAL TYPES

TAPE #1 - CORONA RESISTING HIGH VOLTAGE RUBBER TAPE ONLY.
TAPE #2 - BLACK PLASTIC ELECTRICAL TAPE.

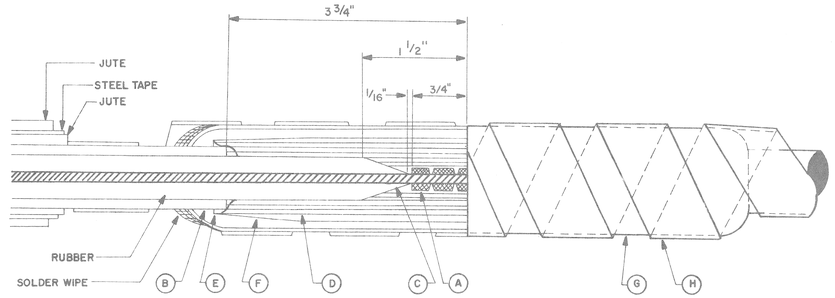

#8 LIGHTING CABLE JOINT
N.T.S.

A - 1 1/2" #8 TINNED COPPER SLEEVE, 2 CIRCUMFERENTIAL CRIMPS ON EACH END.
B - SCORE LEAD SHEATH WITH TUBE CUTTER & CHIP OFF WITH CHIPPING IRON. DO NOT BREAK OFF BY BENDING.
C - CUT INSULATION & PENCIL SMOOTHLY AS SHOWN, AFTER REMOVING TAPE.
D - APPLY TAPE #1 TO APPROXIMATELY 1" DIAMETER OVERALL.
E - OVERLAP WITH TAPE #1 APPROXIMATELY 1/4" FROM END OF LEAD OF LEAD SHEATH, AT LEAST 2 LAYERS OF TAPE AT THIS POINT.
F - 2 LAYERS OF TAPE #2 APPLIED HALF LAP.
G - 1 1/4" X 8" X 1/8" LEAD SLEEVE.
H - TWO LAYERS OF TAPE # 2 HALF LAP, ON ARMORED PARKWAY CABLE ONLY.

SUBSTATION NAMES ON IDENTIFICATION TAGS SHALL BE SPELLED AS FOLLOWS.

BI.	MCRDY.
BUT.ZL.	MTRSE.
CNFLD.	PAL.PK.
CONNR.	PHILP.
CUSTER.	PORTER.
GRNFD.	STNTN.
HUDSN.	STONE.
J.CAMP.	TRNTY.
JOY RD.	TURNR.
LA.BEL.	WALTN.
LTHRP.	WARRN.
LUDDN.	WD.TER.
MAPLE.	

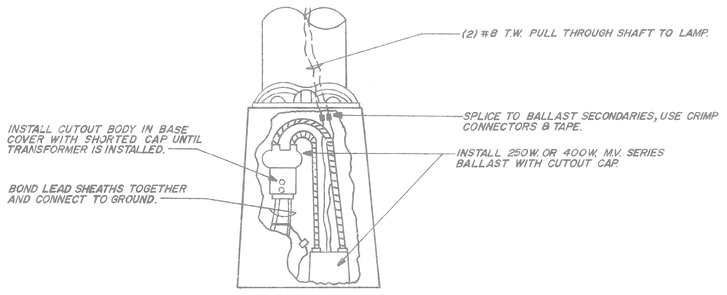

INCANDESCENT TO MERCURY CONVERSION
N.T.S.

201

DATE	DESCRIPTION	CHKD BY.

JEFFERSON/CONNER INDUSTRIAL REVITALIZATION PROJECT
MACK AVENUE LIGHTING
RUBBER INSULATED LEAD SHEATHED CABLE SPLICE & CONNECTIONS DETAILS

DRAWN BY CEA
CHECKED BY
APPROVED BY
DATE AUG. 87

PLAN PREPARED BY
CONSULTING ENGINEERING ASSOCIATES INC.
ENGINEERING CONSULTANTS
16580 WYOMING DETROIT, MICH. 48221

DRWG. NO. 25 OF 40
FILE NO. CEA 1137

CHECKED BY
APPROVED BY

PUBLIC LIGHTING DEPARTMENT
CITY OF DETROIT

FILE NO. 51-0606
SHEET NO. 102 OF 117
DATE AUG. 87

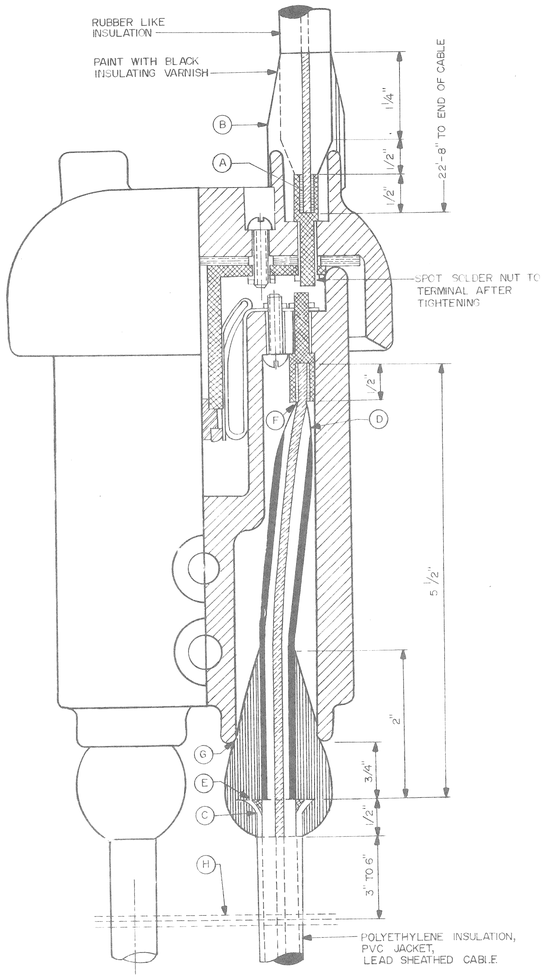

CONNECTION FOR SERIES CUTOUT
N.T.S.

A- SWEAT TERMINAL & PENCIL INSULATION TO FIT SNUGLY IN PORCELAIN OPENING SO THAT AS NUT IS DRAWN UP TIGHT THE OPENING IS COMPLETELY AND TIGHTLY FILLED.
B - BUILD UP WITH TAPE #3 AS SHOWN AND COVER WITH 2 LAYERS 1/2" HALF LAP, TAPE #2 PAINT AS NOTED.
C - USE TUBE CUTTER TO SCORE LEAD SHEATH AND CHIP OFF WITH CHIPPING IRON. DO NOT BREAK OFF BY BENDING.
D - CUT INSULATION AND PENCIL SMOOTHLY FOR CONNECTION.
E - BELL LEAD SHEATH AND FILL SHEATH CAVITY WITH APPROVED ADHESIVE.
F - SWEAT CONDUCTOR INTO TERMINAL.
G - APPLY TAPE #1 OVER BELL SUFFICIENTLY TO FORM A TIGHT FIT BETWEEN CABLE AND PORCELAIN. AT G COVER TAPE #1 WITH 2 LAYERS OF TAPE #2 TO ABOUT 3/4" FROM END OF TAPE #1.
H - #18 SERVICE WIRE OR BRAID, 4 WRAPS BETWEEN CABLES AND SWEATED TO LEAD SHEATH FOR BOND TIE TO GROUND WIRE.

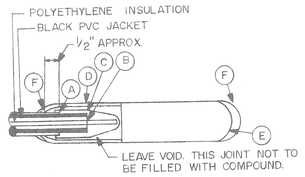

#8 LIGHTING CABLE DEAD END CAP
N.T.S.

A- SCORE LEAD SHEATH WITH TUBE CUTTER AND CHIP OFF WITH CHIPPING IRON. DO NOT BREAK OFF BY BENDING.
B - CUT INSULATION TO EXPOSE 1" OF BARE COPPER.
C - APPLY 3 LAYERS TAPE #2 OVER PVC JACKET, LEAD SHEATH, OVERLAP SHEATH WITH TAPE APPROX. 1/4" & COVER BARE COPPER.
D - LEAD SLEEVE 8" LONG 1/8" WALL 1 1/4" INSIDE DIAMETER.
E - SHAPE & BEAT LEAD SLEEVE TO FORM A CLOSED END.
F - CADMIUM ALLOY WIPING METAL, DO NOT POUR METAL FOR WIPE. USE TORCH & FINGER WIPE WITH MINIMUM OF HEAT.

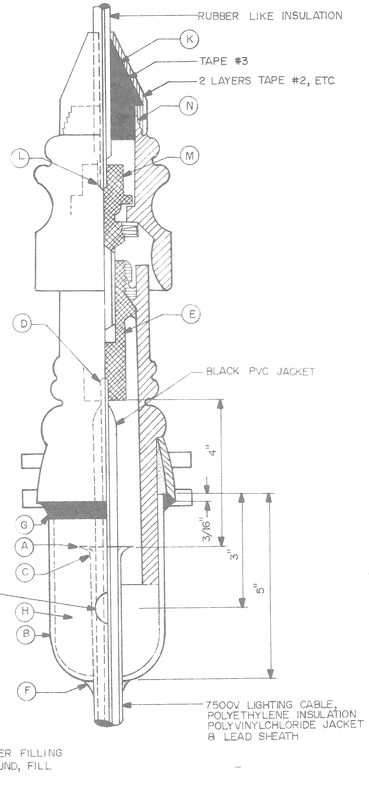

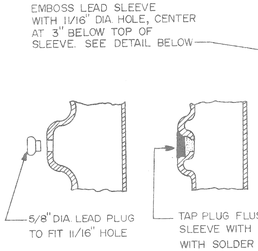

CONNECTIONS FOR I/C 7500V. POTHEAD
N.T.S.

A- USE TUBE CUTTER TO SCORE LEAD SHEATH AND CHIP OFF WITH CHIPPING IRON. DO NOT BREAK OFF BY BENDING. 4" OF INSULATION TO REMAIN, NOT INCLUDING BARED CONDUCTOR.
B- FORM BOTTOM OF EMBOSSED LEAD SLEEVE & SLIP OVER CABLE HOLE IN FRONT.
C - BELL LEAD SHEATH.
D - SWEAT CONDUCTOR INTO TERMINAL & PENCIL INSULATION SMOOTHLY FOR 3/4".
E - MOUNT TERMINAL FIRMLY INTO PORCELAIN HOUSING.
F - PUSH SLEEVE INTO CAST IRON COLLAR AND FINGER WIPE TO CABLE SHEATH WITH LOW TEMPERATURE CADMIUM ALLOY. USE MINIMUM OF HEAT. DO NOT POUR METAL.
G - INVERT & FILL JOINT BETWEEN IRON COLLAR AND LEAD SLEEVE WITH APPROVED EPOXY RESIN.
H - LAY POTHEAD HORIZONTAL & FILL WITH APPROVED COMPOUND. DO NOT HEAT COMPOUND MORE THAN NECESSARY FOR POURING.
I - INSERT 5/8" DIA. LEAD PLUG INTO SLEEVE HOLE, TAP FLUSH AND FILL IN WITH SOLDER.
J - TRAIN THE CABLE AND MOUNT THE POTHEAD ON CROSSARM.
K - SLIP THE CONE SHAPED RUBBER BUSHING ON THE RUBBER INSULATED CABLE RISER.
L - SWEAT CONDUCTOR INTO TERMINAL 'L' AND PENCIL INSULATION AS SHOWN.
M - MOUNT THE TERMINAL FIRMLY INTO THE POTHEAD CAP.
N - BUILD UP WITH TAPE #3 AND CARRY 2 LAYERS OVER THE END OF THE CAP TO POINT 'N' AS SHOWN. COVER WITH 2 LAYERS TAPE #2 HALF LAP. PAINT WITH APPROVED BLACK INSULATING VARNISH.

MATERIAL & SPECIAL PRECAUTIONS

1. TAPE #1: CLEAR POLYETHYLENE TAPE, 0.02" THICK X 3/4" WIDE.
   TAPE #3: APPROVED A.S.T.M. RUBBER TAPE.
   FILLING COMPOUND: APPROVED COMPOUND.
   TAPE #2: BLACK PVC PLASTIC ELECTRICAL TAPE.
   ADHESIVE: APPROVED ADHESIVE.
   WIPING METAL: APPROVED LOW TEMPERATURE CADMIUM ALLOY WIPING METAL.
2. USE SMALL HAND TORCH FOR WIPING JOINTS, AT MINIMUM TEMPERATURE.
3. WHEN IT IS NECESSARY TO SPLICE POLYETHYLENE INSULATED CABLE TO RUBBER CABLE, USE ABOVE MATERIALS.
4. APPLY ADHESIVE INSIDE BELLED SHEATH CAVITY ONLY. APPLY TAPE AFTER ADHESIVE HAS BECOME TACKY.

NOTE:
THE CONTRACTOR SHALL SUBMIT TO THE ENGINEER FOR APPROVAL A LIST OF ALL SPLICING MATERIALS HE PROPOSES TO USE WITH SUPPORTING DATA THAT THE MATERIAL IS SUITABLE FOR APPLICATION AS SHOWN ON THE DRAWINGS.

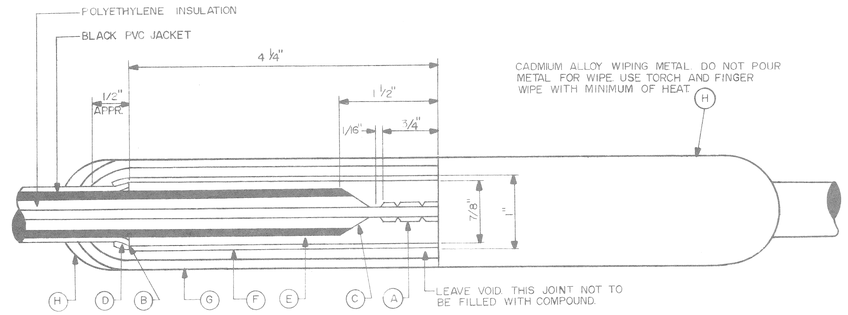

#8 LIGHTING CABLE JOINT
N.T.S.

A - 1 1/2" #8 TINNED COPPER SLEEVE, 2 CIRCUMFERENTIAL CRIMPS ON EACH END.
B - SCORE LEAD SHEATH WITH TUBE CUTTER AND CHIP OFF WITH CHIPPING IRON. DO NOT BREAK OFF BY BENDING.
C - CUT INSULATION AND PENCIL SMOOTHLY AS SHOWN.
D - BELL LEAD SHEATH TO DIAMETER SHOWN AND FILL SHEATH CAVITY WITH APPROVED ADHESIVE.
E - APPLY TAPE #1 OVER PVC JACKET AND BELLED SHEATH TO A DIA. OF 1". OVERLAP BELLED SHEATH WITH TAPE APPROX. 1/4".
F - 2 LAYERS OF TAPE #2 APPLIED HALF LAP.
G - LEAD SLEEVE 10" LONG, 1/8" WALL, 1 1/4" INSIDE DIAMETER.
H - SPECIAL LOW TEMPERATURE CADMIUM ALLOY WIPING METAL.

SUBSTATION NAMES ON IDENTIFICATION TAGS SHALL BE SPELLED AS FOLLOWS

BI.	MCRDY.
BUTZL.	MTRSE.
CNFLD.	PAL. PK.
CONNR.	PHILP.
CUSTER.	PORTER
GRNFLD.	STNTN.
HUDSN.	STONE
J. CAMP.	TRNTY.
JOY RD.	TURNR.
LA. BEL.	
LTHRP.	WALTN.
LUDDN.	WARRN.
MAPLE.	WD. TER.

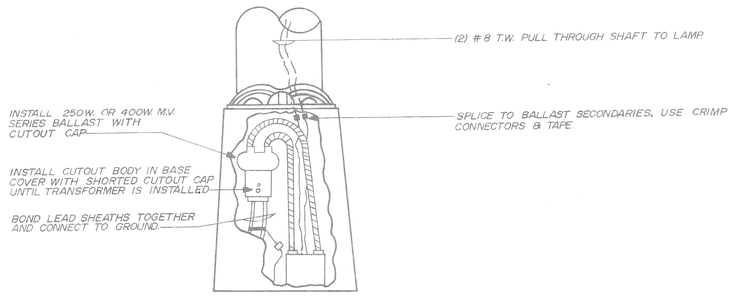

INCANDESCENT TO MERCURY CONVERSION
N.T.S.

202

REVISIONS	DATE	DESCRIPTION	CHKD. BY

JEFFERSON/CONNER INDUSTRIAL REVITALIZATION PROJECT
MACK AVENUE LIGHTING
POLYETHYLENE INSULATED, POLYVINYLCHLORIDE JACKETED, LEAD SHEATHED CABLE CONNECTION SPECIFICATIONS DETAILS

DRAWN CEA	PLAN PREPARED BY CONSULTING ENGINEERING ASSOCIATES INC. ENGINEERING CONSULTANTS 16580 WYOMING DETROIT, MICH. 48221	DRAWN BY	PUBLIC LIGHTING DEPARTMENT CITY OF DETROIT
CHECKED		CHECKED BY	
APPROVED SAV	DRWG. NO. 26 OF 40	APPROVED	FILE NO. 51-0606
DATE AUG. 87	FILE NO. CEA 1137	DATE	SHEET NO. 103 OF 117
			DATE AUG. 87

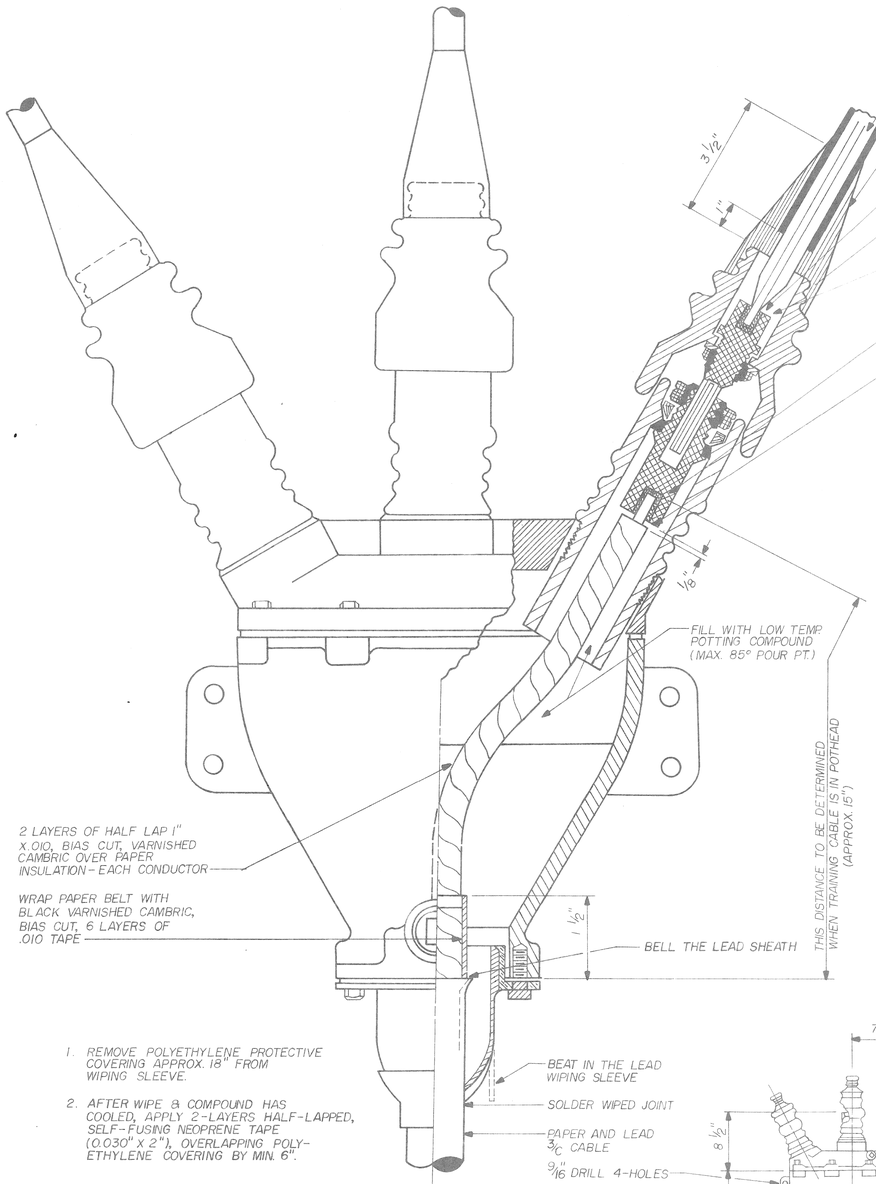

1. REMOVE POLYETHYLENE PROTECTIVE COVERING APPROX. 18" FROM WIPING SLEEVE.
2. AFTER WIPE & COMPOUND HAS COOLED, APPLY 2-LAYERS HALF-LAPPED, SELF-FUSING NEOPRENE TAPE (0.030" X 2"), OVERLAPPING POLY-ETHYLENE COVERING BY MIN. 6".

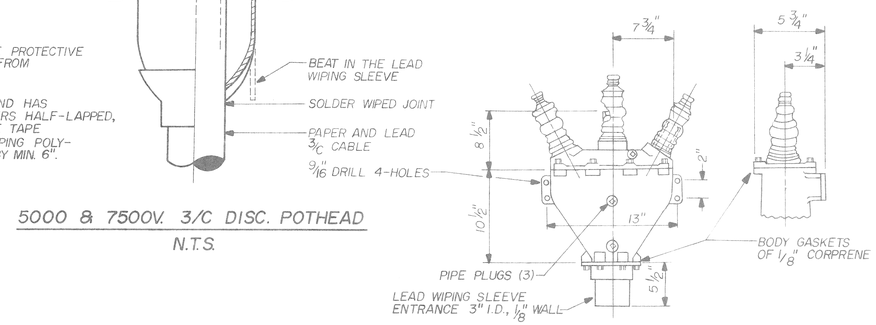

5000 & 7500V. 3/C DISC. POTHEAD

N.T.S.

FACTORY RUBBER INSULATION

FACTORY NEOPRENE JACKET

HALF LAP TWO LAYERS OF BLACK POLY-VINYL CHLORIDE ADHESIVE-BACKED ELECTRICAL TAPE PAINTED WITH BLACK INSULATING VARNISH.

SWEAT CONDUCTOR FULL DEPTH OF HOLE IN TERMINAL

CORONA RESISTANT, SELF-BONDING, HIGH VOLTAGE RUBBER TAPE FOR USE WITH RUBBER INSULATED CABLES.

FILL WITH A NON-HARDENING HIGH VOLTAGE POTHEAD & CABLE JOINT FILLING COMPOUND.

SWEAT CONDUCTOR FULL DEPTH OF HOLE IN TERMINAL

USE COTTON TAPE AND REMOVE AFTER SWEATING.

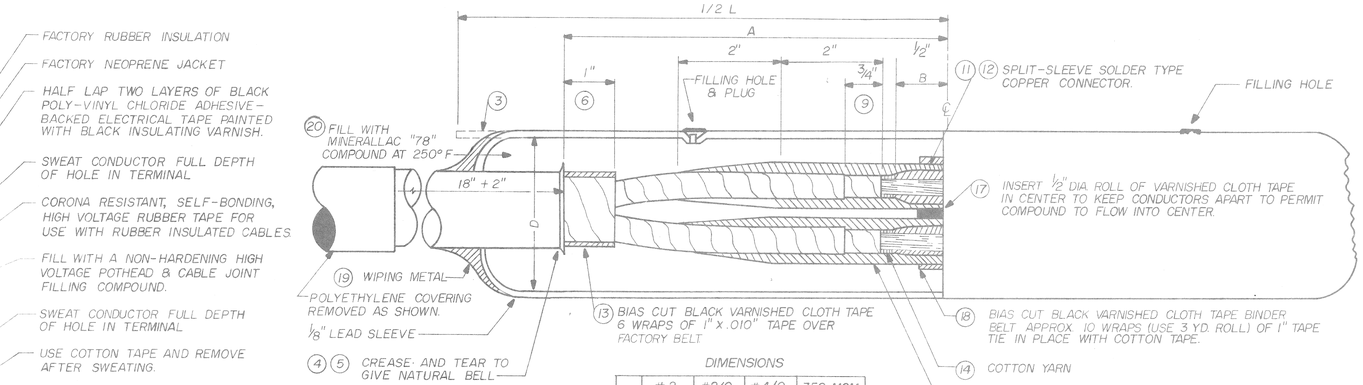

DIMENSIONS

	#2	#2/0	#4/0	350 MCM
A	7 1/2"	9 1/2"	9 1/2"	10 1/2"
B	1"	1"	1 1/4"	1 1/4"
D	3"	3 1/2"	3 1/2"	4"
L	18"	24"	24"	24"

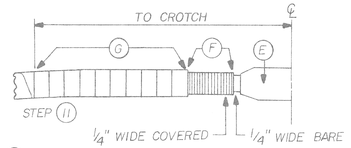

(E) CONNECTOR

(F) WRAP ASBESTOS ROVING OVER BARE CONDUCTOR AND FIRST STEP OF INSULATION.

(G) WRAP COTTON TAPE HALF-LAPPED OVER FACTORY PAPER INSULATION.

DETAIL "A"

STEP-11

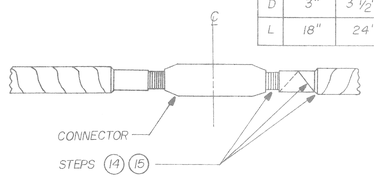

BOILED COTTON YARN IN STEP CORNERS, ONE TURN TO HOLD PAPER AND OVER CONDUCTOR TO LEVEL OF FIRST STEP.

DETAIL "B"

STEP-15

SUBSTATION NAMES ON IDENTIFICATION TAGS SHALL BE SPELLED AS FOLLOWS

BI.	MCRDY.
BUTZL.	MTRSE.
CNFLD.	PAL. PK.
CONNR.	PHILP.
CUSTER.	PORTER.
GRNFD.	STNTN.
HUDSN.	STONE.
J. CAMP.	TRNTY.
JOY. RD.	TURNR.
L.A. BEL.	
LTHRP.	WALTN.
LUDDN.	WARRN.
MAPLE.	W.D. TER.

INSTRUCTIONS FOR 3/C 5.0 & 7.0KV. P. & L. BELTED CABLE JOINTS

1. TRAIN CABLE. DO NOT BEND TO RADIUS LESS THAN THE FOLLOWING SPECIFIED MINIMUM: #2 AND #2/0-16", #4/0-17", 350 MCM-20."
2. ESTABLISH CENTERLINE OF JOINT. CUT CABLES THRU CENTERLINE.
3. CLEAN AND CANDLE OUTSIDE OF SLEEVE FOR 2" AT BELL ENDS. SLIDE SLEEVE OVER CABLE.
4. CREASE LEAD SHEATHS THE SPECIFIED DISTANCE FROM CABLE END (DIM. A) CLEAN AND PROTECT SURFACES OF SHEATH WITH STEARINE WHERE WIPES ARE TO BE MADE.
5. REMOVE SHEATH TO CREASE, TEAR SO AS TO GIVE THE SHEATH A NATURAL BELL.
6. REMOVE ALL BINDER TAPES TO 1" FROM END OF SHEATH.
7. REMOVE FILLERS FROM CROTCH, CUTTING WITH KNIFE DIRECTED AWAY FROM INSULATION.
8. TEST FILLER FOR MOISTURE (IN PARAFFIN AT 250°F)
9. STEP INSULATION BY USE OF GILLING TWINE. FOR THE SINGLE STEP REMOVE HALF OF FACTORY INSULATION THICKNESS.
10. REMOVE INSULATION FROM CONDUCTOR FOR THE CONNECTOR BY CUTTING SQUARE WITHOUT NICKING CONDUCTOR.
11. PUT CONNECTORS IN PLACE WITH SPLIT OPENINGS TURNED UPWARD. COVER BARE CONDUCTOR AND FIRST STEPS WITH ASBESTOS ROVING COVER PAPER INSULATION WITH HALF-LAPPED COTTON TAPE. SEE DETAIL "A"
12. SWEAT CONNECTORS IN PLACE. REMOVE ANY SHARP EDGES OF THE CONNECTOR OR SOLDER. REMOVE COTTON TAPE AND ASBESTOS ROVING BEING CAREFUL TO KEEP METAL PARTICLES OFF OF CONDUCTOR AND PAPER INSULATION.
13. APPLY 6 WRAPS OF 1" BLACK V.C. TAPE OVER THE FACTORY BELT ON EACH END OF SPLICE.
14. APPLY STRANDED COTTON YARN, BOILED IN PETROLATUM TO FILL IN BETWEEN INSULATION AND CONNECTOR TO LEVEL OF FIRST STEP.
15. ALSO APPLY BOILED COTTON YARN OVER STEPS TO HOLD PAPER TAPE IN PLACE WHILE APPLYING V.C. INSULATION. SEE DETAIL "B".
16. APPLY V.C. TAPE HALF-LAPPED TO EACH CONDUCTOR, BUILDING UP TO A THICKNESS OF 1/4" OVER THE CONNECTOR, TAPERING ENDS AS SHOWN AND HAND WIPING THIN COATING OF PETROLATUM BETWEEN LAYERS OF V.C. TAPE.
17. INSTALL 1/2" DIA. SPACER ROLL OF 1" BLACK V.C. TAPE IN CENTER OF CONDUCTOR
18. INSTALL BINDER BELT OF 1" BLACK V.C. TAPE APPROX. 10 LAYERS (USE 3 YD. ROLL) TIE IN PLACE WITH COTTON TAPE.
19. PULL UP AND CENTER SLEEVE. WIPE SLEEVE TO CABLE SHEATHS. DO NOT USE STEARINE FOR COOLING AT THIS STAGE.
20. FILL JOINT WITH COMPOUND AT 250°F. COOL FOR 45 MINUTES, REFILL, AND COOL FOR 15 MINUTES. REPEAT REFILLS TWICE IF NECESSARY.
21. WHILE JOINT IS COOLING, ATTACH BONDING CONNECTION, FIREPROOF CABLE AND ATTACH CABLE TAGS.
22. SEAL FILLING HOLES AND FINISH FIREPROOFING.
23. APPLY 2" WIDE TAPE NEOPRENE COVERING OVER SLEEVE.

NOTES:

1. SEE SPECIFICATIONS OR P.L.C., WHERE REQUIRED, FOR MATERIAL SPECIFICATIONS.
2. THE CONTRACTOR SHALL SUBMIT TO THE ENGINEER FOR APPROVAL A LIST OF ALL SPLICING MATERIALS HE PROPOSES TO USE WITH SUPPORTING DATA THAT MATERIAL IS SUITABLE FOR APPLICATION AS SHOWN ON THE DRAWINGS.

ASSEMBLED POTHEAD

NOTE:

DIMENSIONS APPLY TO BOTH 250A. & 500A. POTHEADS

POTHEADS FURNISHED SHALL INCLUDE ENTRANCE SLEEVE & CAPS.

DATE	DESCRIPTION	CHKD. BY

JEFFERSON/CONNER INDUSTRIAL REVITALIZATION PROJECT

MACK AVENUE LIGHTING

5000 V. & 7000V. BELTED P.& L. CABLE JOINT, AND 5000V. & 7000V. POTHEAD CABLE SPLICE. DETAILS.

DRAWN BY CEA	PLAN PREPARED BY: CONSULTING ENGINEERING ASSOCIATES INC. ENGINEERING CONSULTANTS 16580 WYOMING DETROIT, MICH. 48221		PUBLIC LIGHTING DEPARTMENT CITY OF DETROIT
CHECKED BY		CHECKED BY	
APPROVED BY		APPROVED BY	
DATE: AUG. 87	DRWG. NO.: 27 OF 40	FILE NO.: CEA 1137	FILE NO.: 51-0606
			SHEET NO.: 104 OF 117
			DATE: AUG. 87

BUTT WRAP METHOD "A"

FIG. 1. FIGURE 1.
FELTED ASBESTOS INITIAL WRAP BUTT WRAP.

FIG. 2. FIGURE 2.
SECOND WRAP FLAME RETARDANT ELASTOMER OFFSET BUTT WRAP

FIG. 3. FIGURE 3.
RANDOM WRAP OUTER LAYER WITH A PRESSURE SENSITIVE FIBERGLASS ADHESIVE TAPE TO PREVENT UNRAVELLING

HALF LAP METHOD "B"

FIG. 4. FIGURE 4.
ONE WRAP FLAME RETARDANT ELASTOMER 1/2 OVERLAPPED RANDOM WRAP WITH PRESSURE SENSITIVE FIBERGLASS ADHESIVE TAPE.

NOTE. ELASTOMER TAPE TO BE APPLIED WITH SMOOTH SIDE ON CABLE (ROUGH OR FABRIC SIDE OUT).

APPROXIMATE QUANTITIES REQUIRED PER MANHOLE

METHOD "A"
5 ROLLS 3"X15'-0" FELTED ASBESTOS TAPE
4 ROLLS 3"X 20'-0" ELASTOMER TAPE
1 ROLL FIBERGLASS TAPE

METHOD "B"
8 ROLLS 3"X 20'-0" ELASTOMER TAPE (FLAME RETARDANT)
1 ROLL FIBERGLASS TAPE

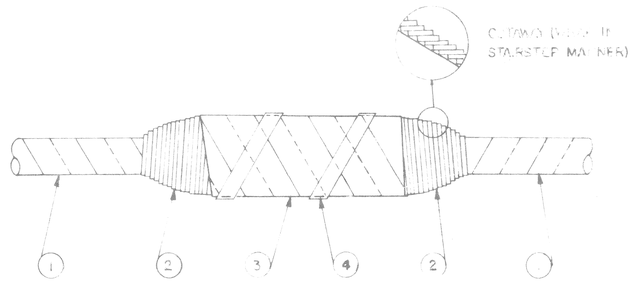

(1) WRAP CABLE WITH 3" WIDE TAPE METHOD "A" OR "B".

(2) WRAP WIDE WITH 1 1/2" WIDE ELASTOMER TAPE AS SHOWN, SPLIT 3" TAPE WITH SKINNING KNIFE FOR THIS STEP.

(3) WRAP SPLICE SLEEVE WITH 3" WIDE TAPE THE SAME AS IN #1 ABOVE.

(4) RANDOM WRAP FIBERGLASS TAPE TO HOLD IN PLACE.

NOTE: WRAP CABLE ON BOTH SIDES OF SPLICE FIRST. NEXT WRAP BOTH WIRES AND THEN COVER THE SPLICE SLEEVE.

24

JEFFERSON/CONNER INDUSTRIAL REVITALIZATION PROJECT
MACK AVENUE LIGHTING
P.L.C. DETAILS CABLE FIREPROOFING

DRAWN BY CEA
CHECKED BY
APPROVED BY
DATE AUG. 87

PLAN PREPARED BY
CONSULTING ENGINEERING ASSOCIATES INC.
ENGINEERING CONSULTANTS
6580 WYOMING DETROIT, MICH. 48221

DRWG NO 28 OF 40
FILE NO CEA 1137

PUBLIC LIGHTING DEPARTMENT
CITY OF DETROIT

51-0606
105 OF 117
AUG. 87

USE	VOLT RATING	ITEM NO.	CONDUCTOR	SYNTHETIC RUBBER	IMPREG-NATED PAPER	POLYETH-YLENE	POLYVINYL-CHLORIDE	SHIELD OVER INSULATED CONDUCTOR	TAPE OVER INSULATED CONDUCTOR/S	IMPREG-NATED PAPER BELT	JACKET	LEAD SHEATH	COVERING OVER LEAD	STEEL TAPE ARMOR	COVERING OVER STEEL TAPE	COVERING OVER CONDUCTOR
OVERHEAD LINE WIRE	——	1	#2 - #6 AWG. H.D., UNCOATED SOLID COPPER A.S.T.M. B1													0.047 INCH BLACK NEOPRENE
	——	2	#4/0 - #2/0 AWG. M.H.D., UNCOATED 7/STR. COPPER A.S.T.M. B2, B8													0.063 INCH BLACK NEOPRENE
	——	3	#6 AWG. H.D., UNCOATED SOLID COPPER A.S.T.M. B1													0.032 INCH BLACK POLYETHYLENE
	——	4	#2 AWG. H.D., UNCOATED SOLID COPPER A.S.T.M. B1													0.047 INCH BLACK POLYETHYLENE
	——	5	#4/0 - #2/0 AWG. M.H.D., UNCOATED 7/STR. COPPER A.S.T.M. B2, B8													0.063 INCH BLACK POLYETHYLENE
SPECIAL EVENT FEEDER,	2000 V.	6														
MULT. ST. LTG.	2000 V.	7														
TRAFFIC SIG. SECONDARY	2000 V.	8														

ALL MULTIPLE STREET LIGHTING, TRAFFIC SIGNAL, SECONDARY AND SPECIAL EVENT CABLES INSTALLED IN CONDUIT SHALL BE AS PER THE FOLLOWING:
CONDUCTORS: COATED, STRANDED COPPER CONDUCTOR PER ASTM B-8 AND B-189. INSULATION: MEETS OR EXCEEDS ALL REQUIREMENTS OF LATEST EDITION OF ICEA S-68-516, NEMA WC 8 FOR ETHYLENE PROPYLENE RUBBER INSULATION AND ASTM D 2802-78 AND UL STANDARD 44. JACKET: MEETS OR EXCEEDS ALL REQUIREMENTS OF LATEST EDITION OF ICEA S-68-516, NEMA WC 8 FOR HEAVY DUTY CHLOROSULFONATED-POLYETHYLENE. LISTED BY UNDERWRITER'S LABORATORIES, INC. AS TYPE RHH OR RHW.

NOTE: PRIOR TO PLACING ORDER FOR PURCHASE OF THIS CABLE, A SAMPLE LENGTH OF CABLE MUST FIRST BE SUBMITTED TO P.L.D. FOR THEIR APPROVAL.

COLOR CODED AS FOLLOWS:
RED - A CIRCUIT
BLACK - B CIRCUIT
WHITE - NEUTRAL

RECEPTACLE, BRACKET & LAMP POST WIRE	600 V.	9	#8 AWG. 1/C UNCOATED, SOFT 7/STR. COPPER A.S.T.M. B8				0.062 INCH 75°C, BLACK, OR WHITE AS REQ'D PIGMENTED NOT IMPRINTED									
2/C AERIAL SERVICE	600 V.	10	2/C #8 AWG. UNCOATED, SOFT 7/STR. COPPER A.S.T.M. B8				0.062 INCH 60°C, BLACK, FIGURE 8 CONSTRUCTION									
DISTRIBUTION CABLES	5000 V. BELTED	11	3/C 350 MCM SECTOR, SOFT UNCOATED COPPER AEIC		0.085 INCH PER CONDUCTOR OIL VISCOSITY 1,000 SUS AT 100°C					0.45 INCH OVERALL OIL VISCOSITY 1,000 SUS AT 100°C		0.095 INCH COPPER BEARING LEAD	0.090 INCH. HEAT & LIGHT STABILIZED BLACK HIGH MOLECULAR WEIGHT POLYETHYLENE OVER LEAD SHEATH			
	5000 V. BELTED	12	3/C #2/0 AWG. SECTOR, SOFT UNCOATED COPPER AEIC		0.05E INCH PER CONDUCTOR OIL VISCOSITY 1,000 SUS AT 100°C					0.045 INCH OVERALL OIL VISCOSITY 1,000 SUS AT 100°		0.085 INCH COPPER BEARING LEAD	0.080 INCH HEAT & LIGHT STABILIZED BLACK HIGH MOLECULAR WEIGHT POLYETHYLENE OVER LEAD SHEATH			
	5000 V. BELTED	13	3/C #2 AWG. ROUND, SOFT UNCOATED COPPER AEIC		0.085 INCH PER CONDUCTOR OIL VISCOSITY 1,000 SUS AT 100°C					0.045 INCH OVERALL OIL VISCOSITY 1,000 SUS AT 100°C		0.080 INCH COPPER BEARING LEAD	0.080 INCH HEAT & LIGHT STABILIZED BLACK HIGH MOLECULAR WEIGHT POLYETHYLENE OVER LEAD SHEATH			
	7000 V. BELTED	14	3/C 350 MCM SECTOR, SOFT UNCOATED COPPER AEIC		0.100 INCH PER CONDUCTOR OIL VISCOSITY 1,000 SUS AT 100°C					0.100 INCH OVERALL OIL VISCOSITY 1,000 SUS AT 100°C		0.095 INCH COPPER BEARING LEAD	0.090 INCH HEAT & LIGHT STABILIZED BLACK HIGH MOLECULAR WEIGHT POLYETHYLENE OVER LEAD SHEATH			
	7000 V. BELTED	15	3/C #2/0 AWG. SECTOR, SOFT UNCOATED COPPER AEIC		0.100 INCH PER CONDUCTOR OIL VISCOSITY 1,000 SUS AT 100°C					0.100 INCH OVERALL OIL VISCOSITY 1,000 SUS AT 100°C		0.085 INCH COPPER BEARING LEAD	0.090 INCH HEAT & LIGHT STABILIZED BLACK HIGH MOLECULAR WEIGHT POLYETHYLENE OVER LEAD SHEATH			
	7000 V. BELTED	16	3/C #4 AWG. ROUND, SOFT UNCOATED COPPER AEIC		0.100 INCH PER CONDUCTOR OIL VISCOSITY 1,000 SUS AT 100°C					0.100 INCH OVERALL OIL VISCOSITY 1,000 SUS AT 100°C		0.085 INCH COPPER BEARING LEAD	0.080 INCH HEAT & LIGHT STABILIZED BLACK HIGH MOLECULAR WEIGHT POLYETHYLENE OVER LEAD SHEATH			
SERIES ST. LTG. CABLE, IN DUCT	7500 V.	17	1/C #8 AWG. SOLID, SOFT UNCOATED COPPER ASTM B3			0.188 INCH HIGH MOLECULAR NATURAL OVER CONDUCTOR	0.047 INCH 60°C BLACK					0.063 INCH COMMERCIALLY PURE				
SERIES ST. LTG. CABLE DIRECT BURIAL	7500 V.	18	1/C #6 AWG. SOLID, SOFT UNCOATED COPPER ASTM B3			0.188 INCH HIGH MOLECULAR NATURAL OVER CONDUCTOR	0.047 INCH 60°C BLACK OVER INSULATED CONDUCTOR					0.063 INCH COMMERCIALLY PURE	0.047 INCH ASPHALTUM SATURATED JUTE OVER LEAD	TWO LAYERS 0.020 INCH GALV. STEEL TAPE	ASPHALTUM SATURATED JUTE OVER STEEL TAPE	
TRANSMISSION CABLES	24000 V. SHIELDED	19	3/C 500 MCM SECTOR, SOFT UNCOATED COPPER * AEIC		0.230 INCH PER CONDUCTOR OIL VISCOSITY 1,000 SUS AT 100°C			COPPER TAPE INTERCALATED WITH SEMI-CONDUCTING OR METALLIZED PAPER TAPE	**			0.110 INCH COPPER BEARING LEAD	0.110 INCH HEAT LIGHT STABILIZED BLACK HIGH MOLECULAR WEIGHT POLYETHYLENE OVER LEAD SHEATH			
	24000 V. SHIELDED	20	3/C 350 MCM SECTOR, SOFT UNCOATED COPPER * AEIC		0.230 INCH PER CONDUCTOR OIL VISCOSITY 1,000 SUS AT 100°C			COPPER TAPE INTERCALATED WITH SEMI-CONDUCTING OR METALLIZED PAPER TAPE	**			0.105 INCH COPPER BEARING LEAD	0.110 INCH HEAT LIGHT STABILIZED BLACK HIGH MOLECULAR WEIGHT POLYETHYLENE OVER LEAD SHEATH			
	24000 V. SHIELDED	21	3/C #2/0 AWG. SECTOR, SOFT UNCOATED COPPER * AEIC		0.245 INCH PER CONDUCTOR OIL VISCOSITY 1,000 SUS AT 100°C			COPPER TAPE INTERCALATED WITH SEMI-CONDUCTING OR METALLIZED PAPER TAPE	**			0.100 INCH COPPER BEARING LEAD	0.090 INCH HEAT LIGHT STABILIZED BLACK HIGH MOLECULAR WEIGHT POLYETHYLENE OVER LEAD SHEATH			
MULTI-CONDUCTOR SIGNAL CABLE, IN DUCT	——	22	#14 AWG. STRANDED, SOFT UNCOATED COPPER, NO. OF CONDUCTOR AS REQD. ASTM B3													
MULTI-CONDUCTOR SIGNAL CABLE, AERIAL (I.M.)	——	23	#14 AWG. STRANDED, SOFT UNCOATED COPPER NO. OF CONDUCTORS AS REQD. ASTM B3													
8/C SERIES ST. LTG. IN DUCT	7500 V.	24	8/C #8 AWG. SOLID, SOFT TINNED COPPER ASTM B33													
OVERHEAD FLEXIBLE TRAINER WIRE (UNSHIELDED)	——	25	1/C #2 AWG. & LARGER, SOFT CLASS G OR H STRANDING TINNED COPPER ASTM B173	SEMI-CONDUCTING COTTON TAPE OVER CONDUCTOR & 0.268 OZONE RESISTING BUTYL.							0.063 INCH GENERAL PURPOSE OR HEAVY DUTY BLACK NEOPRENE					

ACCORDING TO SPECIFICATIONS

SPECIAL CONSTRUCTION
0.063 INCH OF 30% HEAVEA RUBBER AND ONE LAYER OF LAPPED FILLED COTTON TAPE OVER EACH CONDUCTOR CENTRAL CONDUCTOR HAS ADDITIONAL 0.170 INCH VARNISHED CAMBRIC TAPE REMAINING 7 CONDUCTORS EACH HAVE ADDITIONAL 0.094 INCH VARNISHED CAMBRIC TAPE ONE OF FOUTSIDE CONDUCTORS WRAPPED WITH WHITE PAPER FOR IDENTIFICATION ALL CONDUCTORS CABLED WITH PARAFFINED JUTE (OUTSIDE FILLER). 0.094 INCH BELT OF OIL SATURATED PAPER OVERALL 0.115 INCH COPPER BEARING LEAD BENEATH OVERALL.

* CARBON BLACK PAPER TAPE OVER CONDUCTOR

** BINDER TAPE OVER SHIELDED INSULATED CONDUCTORS AND FILLERS TO BE COPPER OR BRONZE TAPE INTERCALATED WITH PAPER TAPE OR (2) METALLIZED PAPER TAPES

CONTINUED ON 207

SIZE S-4963

DATE	DESCRIPTION	CHKD. BY

JEFFERSON/CONNER INDUSTRIAL REVITALIZATION PROJECT
MACK AVENUE LIGHTING
CABLE & WIRE SPECIFICATIONS, DETAILS

DRAWN	CHECKED	APPROVED	DATE
CEA			AUG. 87

DRAWG. NO. 29 OF 40

CONSULTING ENGINEERING CONSULTANTS
PLAN PREPARED BY
ENGINEERING ASSOCIATES INC.
16590 WYOMING DETROIT, MICH. 48221
FILE NO. CEA 1137

DRAWN BY	CHECKED BY	APPROVED

PUBLIC LIGHTING DEPARTMENT
CITY OF DETROIT

FILE NO. 51-0606
SHEET NO. 106 OF 117
DATE AUG. 87

205

1. DISTRIBUTION AND TRANSMISSION CABLES

ALL TRANSMISSION CABLES, (24 KV., ITEMS 11-16 INCLUSIVE) ARE FOR CIRCUITS WITH GROUNDED NEUTRAL, AND SHALL CONFORM STRICTLY WITH THE LATEST REVISION OF THE A.E.I.C. "SPECIFICATION FOR IMPREGNATED PAPER INSULATED, LEAD COVERED SOLID TYPE CABLE", 8TH EDITION, DATED APRIL, 1954, AND CONSTRUCTION OPTIONS AS NOTED IN SHEET 1.

ALL DISTRIBUTION CABLES, (7.8.5 KV, ITEMS 13-21 INCLUSIVE) ARE FOR CIRCUITS WITH UNGROUNDED NEUTRAL AND SHALL ALSO CONFORM WITH THE ABOVE SPECIFICATION, WITH CONSTRUCTION OPTIONS AS NOTED IN TABLE 1.

2. OVERHEAD LINE WIRE

OVERHEAD LINE WIRE SHALL BE IN ACCORDANCE WITH LATEST REVISION OF ASA C8.34 (NEOPRENE COVERING) OR THE LATEST REVISION OF ASA C8.35 (POLYETHYLENE COVERING).

3. 8/C, #8AWG, STREET LIGHTING CABLE, 7500 V.

THIS IS A SPECIAL CONSTRUCTION AND SHALL BE MADE STRICTLY IN ACCORDANCE WITH THE DESCRIPTION IN TABLE 1.

4. OTHER RUBBER OR THERMOPLASTIC INSULATED CABLES, LEADED & NON-LEADED

WIRE SIZE, INSULATION TYPE AND NOMINAL THICKNESSES, OTHER CONSTRUCTION FEATURES SHALL BE AS SHOWN IN TABLE 1, AND APPLICABLE REFERENCE SPECIFICATIONS SHOWN BELOW:

INSULATIONS

THE MINIMUM INSULATION THICKNESS OF ANY OF THESE CABLES SHALL BE LESS THAN 90% OF THE NOMINAL THICKNESS SHOWN ON TABLE 1.

THE PHYSICAL AND AGING PROPERTIES OF THERMOPLASTIC AND RUBBER INSULATIONS SHALL BE AS FOLLOWS:

		POLYVINYL-CHLORIDE 60° C	POLYVINYL-CHLORIDE 75°	HIGH MOLECULAR WEIGHT NATURAL POLYETHYLENE	SYNTHETIC RUBBER 75°C HEAT & MOISTURE RESISTANT	OZONE RESISTING BUTYL RUBBER
ORIGINAL	TENSILE STRENGTH PSI	2300, MIN.	2300, MIN.	1400, MIN.	700, MIN.	600, MIN.
	ELONGATION AT RUPTURE, PERCENT	250, MIN.	250, MIN.	350, MIN.	300 MIN. AND 1/4" SET, MAX.	350, MIN. AND 1/8" SET MAX.
AIR OVEN TEST, TIME & TEMP AS NOTED	TENSILE STRENGTH % OF ORIGINAL	65, MIN. 168 HRS., 100 ±1°C	120, MAX. 80, MIN. 168 HRS., 120±1°C	75, MIN. 48 HRS., 130±1°C	——	60, MIN. 168 HRS., 100±1°C
	ELONGATION % OF ORIGINAL	* 65, MIN. 168 HRS., 100±1°C	** 75, MIN. 168 HRS., 120±1°C	75, MIN. 48 HRS., 100±1°C	——	60, MIN. 168 HRS., 100±1°C
OXYGEN PRESSURE TEST	TENSILE STRENGTH % OF ORIGINAL	——	——	——	50, MIN. 168 HRS., 80±1°C	——
	ELONGATION % OF ORIGINAL	——	——	——	50, MIN. 168 HRS., 80±1°C	——
AIR PRESSURE HEAT TEST	TENSILE STRENGTH % OF ORIGINAL	——	——	——	50, MIN. 20 HRS., 127±1°C	50, MIN. 40 HRS., 127±1°C
	ELONGATION % OF ORIGINAL	——	——	——	50, MIN. 20 HRS., 127±1°C	50, MIN. 40 HRS., 127±1°C
HEAT DISTORTION 121±1°C	% OF ORIGINAL	50, MAX.	25, MAX.	——	——	——
OIL IMMERSION 4 HRS., 70±1°C	TENSILE STRENGTH % OF ORIGINAL	* 85, MIN.	** 85, MIN.	——	——	——
	ELONGATION % OF ORIGINAL	* 85, MIN.	** 85, MIN.	——	——	——
HEAT SHOCK 121 ± 1°C	——	NO CRACKS	NO CRACKS	——	——	——
COLD BEND	——	NO CRACKS -30±1°C	NO CRACKS -30±1°C	NO CRACKS -55±1°C	——	——
INSULATION RESISTANCE CONSTANT AT 15.6°C	——	1,000 MIN.	2,000 MIN.	50,000 MIN.	4,000 MIN.	20,000 MIN.
FLAME RESISTING PROPERTIES	——	SECT. 6.5 IPCEA S-61-402	SECT. 6.5 IPCEA S-61-402	——	——	——
ACCELERATED WATER ABSORPTION REQUIREMENT	ELECTRICAL METHOD — DIELECTRIC CONSTANT, 1 DAY	10, MAX.	10, MAX.	——	5, MAX.	——
	ELECTRICAL METHOD — % CAPACITANCE INCREASE	1-14 DAYS -10, MAX. 7-14 DAYS -5, MAX.	1-14 DAYS -4.0, MAX. 7-14 DAYS -2.0, MAX.	——	1-14 DAYS 12.0, MAX. 7-14 DAYS 4.0, MAX.	1-14 DAYS 5.0, MAX. 7-14 DAYS 3.0, MAX.
	ELECTRICAL METHOD — TEMP.	50±1°C	75±1°C	——	75±1°C	75±1°C
	— OR — GRAVIMETRIC METHOD	20 MILLIGRAMS PER SQ. INCH MAX.	10 MILLIGRAMS PER SQ. INCH MAX.	——	20 MILLIGRAMS PER SQ. INCH, MAX.	15 MILLIGRAMS PER SQ. INCH, MAX.
TEST IN ACCORDANCE WITH LATEST REVISION OF		IPCEA S-61-402 (EXCEPTIONS ARE NOTED ABOVE)		IPCEA S-61-402	IPCEA S-19-81 (EXCEPTIONS ARE NOTED ABOVE)	IPCEA S-19-81

FOR #6 AWG AND LARGER, USING BUFFED DIE-CUT SPECIMENS, THE FOLLOWING VALUES SHALL APPLY:

* ELONGATION AFTER AIR OVEN TEST 45% MIN.

** ELONGATION AFTER AIR OVEN TEST 50% MIN.

* OR ** TENSILE STRENGTH AFTER OIL IMMERSION 80% MIN.

* OR ** ELONGATION AFTER OIL IMMERSION 60% MIN.

CONDUCTORS

ALL CONDUCTORS SHALL BE COPPER, COMPLYING WITH THE LATEST REVISIONS OF ASTM SPECIFICATIONS, AS FOLLOWS:

SOFT OR ANNEALED, BARE COPPER WIRE	ASTM B3
MEDIUM HARD DRAWN COPPER WIRE	ASTM B2
HARD DRAWN COPPER WIRE	ASTM B1
CONCENTRIC-LAY-STRANDED COPPER CONDUCTORS, HARD, MEDIUM HARD OR SOFT, COATED OR UNCOATED, AS REQUIRED.	ASTM B8
RUPE-LAY-STRANLED, SOFT, COPPER CONDUCTORS, COATED OR UNCOATED, AS REQUIRED	ASTM B173
SOFT, SOLID COPPER CONDUCTORS, TINNED	ASTM B33
SOFT, SOLID COPPER CONDUCTORS, LEAD OR LEAD ALLOY COATED	ASTM B189

JACKETS

THE MINIMUM JACKET THICKNESS SHALL NOT BE LESS THAN 85% OF THE NOMINAL THICKNESS SHOWN ON TABLE 1.

		NEOPRENE BLACK, HEAVY DUTY	NEOPRENE BLACK GENERAL PURPOSE	POLYVINYL-CHLORIDE, BLACK	HEAT & LIGHT STABILIZED BLACK POLYETHYLENE COVER'G OVER LEAD SHEATH
ORIGINAL	TENSILE STRENGTH PSI	1800, MIN.	1500, MIN.	1500, MIN.	1400, MIN.
	ELONGATION AT RUPTURE, %	300, MIN. & 3/8" MAX. SET	250, MIN. & 3/8" MAX. SET	100, MIN.	350, MIN.
AIR OVEN TEST TIME & TEMP AS NOTED	TENSILE STRENGTH % OF ORIGINAL	——	——	85, MIN. 120 HRS., 100±1°C	75, MIN.
	ELONGATION % OF ORIGINAL	——	——	60, MIN. 120 HRS., 100±1°C	75, MIN.
OXYGEN PRESSURE TEST 168 HRS. 80±1°C	TENSILE STRENGTH % OF ORIGINAL	50, MIN.	50, MIN.	——	——
	ELONGATION % OF ORIGINAL	50, MIN.	50, MIN.	——	——
AIR PRESSURE HEAT TEST 20 HRS. 127±1°C	TENSILE STRENGTH % OF ORIGINAL	50, MIN.	50, MIN.	——	——
	ELONGATION % OF ORIGINAL	50, MIN.	50, MIN.	——	——
OIL IMMERSION TEST, TIME & TEMP AS NOTED	TENSILE STRENGTH % OF ORIGINAL	60, MIN. 18 HRS. 121±1°C	60, MIN. 18 HRS. 121±1°C	60, MIN. 4 HRS. 70±1°C	——
	ELONGATION % OF ORIGINAL	60, MIN. 18 HRS. 121±1°C	60, MIN. 18 HRS. 121±1°C	60, MIN. 4 HRS. 70±1°C	——
HEAT DISTORTION, PERCENT OF UNAGED VALUE	——	——	——	50, MAX. 121±1°C	25, MAX. 90±1°C
HEAT SHOCK 121±1°C	——	——	——	NO CRACKS	——
COLD BEND TEST -35±1°C	——	——	——	NO CRACKS	NO CRACKS
ENVIRONMENTAL CRACKING	——	——	——	——	NO CRACKS
LIGHT ABSORPTIVITY	——	——	——	——	24,000, MIN.
TEST IN ACCORDANCE WITH LATEST REVISION OF		IPCEA S-19-81		IPCEA S-61-402	IPCEA INTERIM REVISION #1 PUB. S-54-401 SEPT. 1959

REVISIONS	DATE	DESCRIPTION	CHKD. BY

JEFFERSON/CONNER INDUSTRIAL REVITALIZATION PROJECT
MACK AVENUE LIGHTING
CABLE & WIRE SPECIFICATIONS
DETAILS

DRAWN CEA	PLAN PREPARED BY CONSULTING ENGINEERING ASSOCIATES, INC. ENGINEERING CONSULTANTS 16580 WYOMING DETROIT, MICH. 48221		PUBLIC LIGHTING DEPARTMENT CITY OF DETROIT
CHECKED		CHECKED BY	FILE NO. 51-0606
APPROVED SM			SHEET NO. 107 OF 117
DATE AUG. 87	DRWG. NO. 30 OF 40 FILE NO. CEA 1137	APPROVED BY	DATE AUG. 87

CERTIFIED TEST REPORTS

SHIPMENTS OF WIRE AND CABLE SHALL NOT BE CONSIDERED COMPLETE UNTIL CERTIFIED TEST REPORTS ARE RECEIVED AND APPROVED. TEST REPORTS FOR VARIOUS ITEMS OF WIRE AND CABLE SHOWN ON SHEET 1 SHALL CONTAIN THE FOLLOWING TEST RESULTS:

ITEMS 1-5 INCLUSIVE - OVERHEAD LINE WIRE

1. CONDUCTOR CONTINUITY, RESISISTANCE, TENSILE STRENGTH AND ELONGATION TESTS.
2. COVERING THICKNESS, PHYSICAL AND AGING TESTS.
3. WEIGHT OF FINISHED WIRE.

ALL TESTS IN ACCORDANCE WITH THE LATEST REVISION OF ASA 8.34 (NEOPRENE COVERING) OR ASA 8.35 (POLYETHYLENE COVERING).

ITEMS 6-10 INCLUSIVE

1. CONDUCTOR CONTINUITY, RESISTANCE, TENSILE STRENGTH, AND ELONGATION TESTS IN ACCORDANCE WITH THE LATEST REVISIONS OF ASTM B8, B33 OR B189.
2. THE PHYSICAL AND OTHER TESTS FOR THE SPECIFIED INSULATION SHOWN ON SHEET-2.
3. INSULATION THICKNESS MEASUREMENTS.
4. THE ALTERNATING-CURRENT VOLTAGE TEST IN ACCORDANCE WITH THE LATEST REVISION OF IPCEA S-61-402.
5. INSULATION RESISTANCE TEST. INSULATION RESISTANCE CONSTANT AS SHOWN ON SHEET-2.
6. (CABLE ITEM 8 ONLY) MINIMUM, MAXIMUM AND AVERAGE LEAD THICKNESS MEASUREMENTS SHALL ALSO BE INCLUDED.
7. (CABLE ITEM 10 ONLY) A RIP TEST SHALL ALSO BE INCLUDED AS FOLLOWS:

   A SIX-FOOT SAMPLE OF THE COMPLETED 2 CONDUCTOR WIRE WITH CLEANLY CUT ENDS SHALL BE SUBJECTED TO A TEMPERATURE OF -10°F FOR ONE HOUR. WHILE STILL COLD, THE TWO INSULATED CONDUCTORS SHALL BE SEPARATED AT ONE END FOR A DISTANCE OF APPROXIMATELY 3 INCHES AND THEN SHALL BE TORN APART WITH A STEADY PULL AT A RATE OF 33 INCHES IN ONE SECOND OR LESS. THERE SHALL BE NO DAMAGE TO THE INSULATION.

ITEMS 11-16 INCLUSIVE - DISTRIBUTION CABLES UNDER 10 KV. RATING

1. CONDUCTOR RESISTANCE.
2. SHEATH THICKNESS MEASUREMENTS.
3. HIGH VOLTAGE TEST.
4. MECHANICAL INTEGRITY TEST.
5. BENDING TEST.
6. SPARK TEST ON COVERING OVER LEAD SHEATH ON EACH LENGTH IF COVERING IS SPECIFIED.

ALL TESTS SHALL BE IN ACCORDANCE WITH THE LATEST REVISION OF "SOLID TYPE IMPREGNATED-PAPER-INSULATED LEAD-COVERED CABLE SPECIFICATIONS" PUBLISHED BY THE ASSOCIATION OF EDISON ILLUMINATING COMPANIES.

ITEMS 17-18 INCLUSIVE - SERIES STREET LIGHTING CABLE

1. CONDUCTOR RESISTANCE AND CONTINUITY, IN ACCORDANCE WITH THE LATEST REVISION OF ASTM B-3.
2. THE PHYSICAL AND OTHER TESTS FOR HIGH MOLECULAR WEIGHT POLYETHYLENE INSULATION AS SHOWN ON SHEET-2.
3. THE PHYSICAL AND OTHER TESTS FOR 60°C POLYVINYL-CHLORIDE INSULATION AS SHOWN ON SHEET-2.
4. THE FOLLOWING TESTS SHALL ALSO BE MADE AND REPORTED:

HIGH VOLTAGE TEST - AFTER NOT LESS THAN SIX (6) HOURS IMMERSION IN WATER AT 60° F. AND WHILE STILL IMMERSED, EACH REEL OF INSULATED CABLE WITHOUT LEAD, SHALL WITHSTAND A 60 CYCLE POTENTIAL OF 30,000 VOLTS FOR A PERIOD OF FIVE (5) MINUTES.

INSULATION RESISTANCE TEST - THE INSULATION RESISTANCE SHALL NOT BE LESS THAN 26,500 MEGOHMS PER THOUSAND FEET AT 60° F. THIS TEST SHALL BE CONDUCTED UPON COMPLETION OF THE HIGH VOLTAGE TEST.

SHORT-TIME DIELECTRIC STRENGTH TEST - A TEN (10) FT. SAMPLE OF THE FINISHED CABLE WITH ONLY THE LEAD REMOVED, AFTER TWELVE (12) HOURS SUBMERSION IN WATER AND WHILE STILL IMMERSED, SHALL WITHSTAND A VOLTAGE TEST OF 60,000 VOLTS 60 CYCLE A.C. FOR FIVE (5) MINUTES. ON COMPLETION OF THIS TEST, THE VOLTAGE WILL BE GRADUALLY RAISED IN ACCORDANCE WITH I.P.C.E.A. SPECIFICATIONS, UNTIL THE INSULATION IS PUNCTURED. THIS VOLTAGE SHALL BE RECORDED AND SHALL BE NOT LESS THAN 72,000 VOLTS.

EXTERNAL CORONA TEST - THIS TEST SHALL BE CONDUCTED ON ONE (1) SAMPLE PER 10,000 FT. OF COMPLETED CABLE EIGHTEEN (18) INCHES LONG WITH ONLY THE LEAD SHEATH REMOVED. AFTER WHICH IT SHALL BE WIPED WITH A CLEAN DRY CLOTH. THESE SAMPLES SHALL BE BENT AND MAINTAINED IN A "U-SHAPE" HAVING A BENDING DIAMETER EQUAL TO FIVE TIMES THE INSULATED CABLE DIAMETER. THE BENT SAMPLES SHALL THEN BE PLACED IN A VERTICAL POSITION ON A FLAT METALLIC GROUNDED PLATE AND 60 CYCLE A.C. VOLTAGE SHALL BE GRADUALLY APPLIED WITH A CORONA-LEVEL TEST APPARATUS OF THE FILTER-CIRCUIT TYPE, MAINTAINING SUFFICIENT AMPLIFICATION TO INDICATE THE EXISTENCE OF CORONA DISCHARGE. THIS VOLTAGE SHALL BE RAISED UNTIL CORONA IS INDICATED, AND SHALL NOT BE LESS THAN 8,200 VOLTS RMS.

THE VOLTAGE SHALL THEN BE RAISED TO 25,000 VOLTS AND MAINTAINED FOR SIX (6) HOURS WITHOUT FAILURE OF THE INSULATION. THE VOLTAGE SHALL THEN BE RAISED IN 10% STEPS AT TEN (10) MINUTE INTERVALS UNTIL FAILURE OF THE INSULATION OR FLASHOVER OCCURS.

THESE VOLTAGES SHALL BE RECORDED AND REPORTED.

INTERNAL-CORONAL-LEVEL-EACH LENGTH OF COMPLETED CABLE SHALL BE TESTED IN ACCORDANCE WITH SECTION 6.13 OF THE LATEST REVISION OF I.P.C.E.A. STANDARD S-61-402, EXCEPT THAT THE MINIMUM CORONA LEVEL SHALL BE 6,200 VOLTS.

ITEMS 19-21 INCLUSIVE - TRANSMISSION CABLES.

1. CONDUCTOR RESISTANCE.
2. SHEATH THICKNESS MEASUREMENT.
3. HIGH VOLTAGE TEST.
4. MECHANICAL INTEGRITY TEST.
5. BENDING TEST.
6. IONIZATION TEST.)
7. HIGH VOLTAGE-TIME TEST) ONE TEST PER ORDER OR THERE IS A QUANTITY LIMITATION OF
8. DIELECTRIC POWER TEST) 25,000 FT. ON THESE TESTS PER AEIC
9. POWER FACTOR TEST.
10. SPARK TEST ON COVERING OVER LEAD SHEATH ON EACH LENGTH.

ALL TESTS SHALL BE IN ACCORDANCE WITH THE LATEST REVISION OF "SOLID-TYPE IMPREGNATED-PAPER-INSULATED LEAD-COVERED CABLE SPECIFICATION," PUBLISHED BY THE ASSOCIATION OF EDISON ILLUMINATING COMPANIES.

ITEMS 22-23 INCLUSIVE - MULTI-CONDUCTOR TRAFFIC SIGNAL CABLE

1. INDIVIDUAL CONDUCTOR RESISTANCE IN ACCORDANCE WITH THE LATEST REVISION OF ASTM B3.
2. INSULATION THICKNESS MEASUREMENTS.
3. INSULATION PHYSICAL AND OTHER TESTS FOR 60°C. POLYVINYLCHLORIDE IS SHOWN ON SHEET-2.
4. ALTERNATING CURRENT VOLTAGE TEST.
5. INSULATION RESISTANCE TEST. INSULATION RESISTANCE CONSTANT AS SHOWN ON SHEET-2.
6. (CABLE ITEM 23 ONLY)
   a. POLYVINYLCHLORIDE JACKET PHYSICAL AND OTHER TESTS SHOWN ON SHEET-2.
   b. JACKET THICKNESS MEASUREMENTS.
7. (CABLE ITEM 22 ONLY), LEAD SHEATH THICKNESS MEASUREMENTS.

TESTS NO 4-7, INCLUSIVE, SHALL BE MADE IN ACCORDANCE WITH THE LATEST REVISION OF IPCEA S-61-402, EXCEPT THAT THE INSULATION RESISTANCE CONSTANT SHALL BE 1000 AT 15.6° C.

ITEM 24 - 8/C SERIES STREET LIGHTING CABLE

1. CONDUCTOR CONTINUITY AND RESISTANCE IN ACCORDANCE WITH THE LATEST REVISION OF ASTM B-33.
2. LEAD SHEATH THICKNESS MEASUREMENTS.
3. A HIGH VOLTAGE TEST CONSISTING OF 22,500 VOLTS, 60 CYCLES A.C. FOR A DURATION OF 5 MINUTES, BETWEEN CONDUCTORS AND FROM EACH CONDUCTOR TO THE LEAD SHEATH.

ITEM 25 - FLEXIBLE OVERHEAD TRAINER WIRE

1. CONDUCTOR RESISTANCE, TENSILE STRENGTH AND ELONGATION IN ACCORDANCE WITH THE LATEST REVISION OF ASTM B-173.
2. INSULATION PHYSICAL AND OTHER TESTS SHOWN ON SHEET-2.
3. ADDITIONAL INSULATION TESTS IN ACCORDANCE WITH THE LATEST REVISION OF IPCEA S-19-81 AS FOLLOWS:
   a. ALTERNATING-CURRENT VOLTAGE TEST.
   b. INSULATION RESISTANCE TEST.
   c. DIRECT-CURRENT VOLTAGE TEST.
   d. CORONA LEVEL TEST.
   e. SHORT-TIME DIELECTRIC STRENGTH TEST.
   f. COLD-BENDING AND LONG-TIME DIELECTRIC STRENGTH TEST.
   g. CAPACITY AND POWER FACTOR TEST.
   h. OZONE RESISTANCE TEST.
4. PHYSICAL AND OTHER TESTS ON THE NEOPRENE JACKET (GENERAL PURPOSE OR HEAVY DUTY), AS SHOWN ON SHEET-2.
5. JACKET THICKNESS MEASUREMENTS.

ITEM 26 - SUPERVISORY CONTROL CABLE (MULTI-CONDUCTOR)

1. CONDUCTOR RESISTANCE, TENSILE STRENGTH AND ELONGATION, IN ACCORDANCE WITH THE LATEST REVISION OF ASTM B-3.
2. INSULATION PHYSICAL FOR 60°C. PVC INSULATION AND OTHER TESTS SHOWN ON SHEET 2.
3. INSULATION RESISTANCE TESTS.
4. VOLTAGE TESTS PER IPCEA S 61-402.
5. INSULATION THICKNESS.
6. LEAD SHEATH THICKNESS.
7. THICKNESS OF COVERING OVER LEAD SHEATH.
8. SPARK TEST ON COVER OVER LEAD SHEATH ON EACH LENGTH.

ITEM 27 - INTEGRAL MESSENGER COMMUNICATIONS CABLE (MULTI-PAIR)

ITEM 28 - COMMUNICATIONS CABLE

ITEM 29 - COMMUNICATIONS CABLE - LEAD SHEATH

ITEM 30 - COMMUNICATIONS CABLE, LEAD SHEATH, DIRECT BURIAL

MULTI-PAIR COMMUNICATION CABLES (Maximum Mutual Capacitance = 90 nf per mile) (ALSO FOR TRAFFIC SIGNAL CHRONOPLAN.) AND SUPERVISORY

ITEM NO.	USE AND RATING	CONDUCTOR	INSULATION (b)	TAPE OVER INSULATED CONDUCTORS	INNER BELT	SHIELD OVER TAPE OR BELT	JACKET OR SHEATH	COVERING OVER SHEATH
27	AERIAL (a) 600 V.	#16 OR #19 AWG, SOLID, UNCOATED COPPER (ASTM B3) - NUMBER OF PAIRS AS REQUIRED	0.025-IN.(c) CLASS B POLYETHYLENE (ASTM D 1351)	12.5 PERCENT MINIMUM LAP POLYETHYLENE TEREPHTHALATE		CORRUGATED, LONGITUDINAL, ANNEALED, (c) 0.004-IN. COPPER	BLACK POLYETHYLENE (ASTM D 2308). THICKNESSES OVER CORE AND MESSENGER AND WEB DIMENSIONS IN ACCORDANCE WITH REA SPECIFICATION PE-38.	
28	IN DUCT 600 V.				BLACK POLY-ETHYLENE (ASTM D 2308) 0.010-IN. MIN. 0.030-IN. MAX. THICKNESS		BLACK POLYETHYLENE (ASTM D 2308) THICKNESS IN ACCORDANCE WITH PARAGRAPH 3.6.7, 3.7 AND TABLE IV OF FED. SPEC. J.C.111.	
29	IN DUCT 600 V.	#16 OR #19 AWG, SOLID, TINNED COPPER (ASTM B 33), NUMBER OF PAIRS AS REQUIRED	0.031 IN.(c) DIOCTYL PHTHALATE PLASTICIZED PVC (ASTM D 2219)				LEAD-ANTIMONY THICKNESS PER ITEM 26 EXCEPT 0.063-IN. MIN. THICKNESS (c)	
30	DIRECT BURIAL 600 V.						COMMERCIALLY PURE LEAD, THICKNESS PER ITEMS 22 & 23.	ASPHALTUM-SATURATED JUTE STEEL ARMOR PER ITEMS 17 & 18.

TEST REPORTS

SHIPMENTS OF WIRE AND CABLE SHALL NOT BE CONSIDERED COMPLETE UNTIL CERTIFIED TEST REPORTS ARE RECEIVED AND APPROVED. TEST REPORTS FOR THE VARIOUS ITEMS ABOVE SHALL SHOW COMPLIANCE WITH CITED SPECIFICATIONS, LISTING TEST RESULTS, AS WELL AS THE FOLLOWING TESTS:

1. CONDUCTOR RESISTANCE OF EACH LENGTH OF EACH CONDUCTOR IN OHMS PER 1000 Ft.

2. CERTIFICATION OF MUTUAL CAPACITANCE OF ALL CABLES AND OF NON-INJURIOUS EFFECT OF FLOODING COMPOUND ON ITEM 27.

(a) "FIGURE 8" CONSTRUCTION. MESSENGER SHALL BE 7 STRAND EHS GALVANIZED, CLASS A, ¼-IN. NOMINAL DIAM. (ASTM A 475) AND SHALL BE FULL FLOODED.
(b) COLOR CODED PER FEDERAL SPECIFICATION J-C-111.
(c) NOMINAL THICKNESS, INCHES.

DATE	DESCRIPTION	CHKD. BY

REVISIONS

JEFFERSON/CONNER INDUSTRIAL REVITALIZATION PROJECT
MACK AVENUE LIGHTING
CABLE & WIRE SPECIFICATIONS
DETAILS

DRAWN CEA	PLAN PREPARED BY CONSULTING ENGINEERING ASSOCIATES INC. ENGINEERING CONSULTANTS 16580 WYOMING DETROIT, MICH. 48221		PUBLIC LIGHTING DEPARTMENT CITY OF DETROIT
CHECKED		CHECKED BY	
APPROVED SM		APPROVED BY	
DATE AUG. 87	DRWG. NO. 31 OF 40 / FILE NO. CEA 1137		DATE AUG. 87

FILE NO. 51-0606
SHEET NO. 108 OF 117

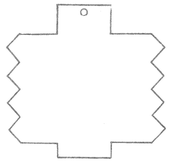

24,000 VOLT TRUNK LINE

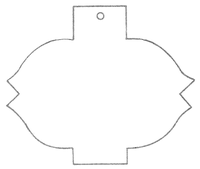

24,000 VOLT FEEDER

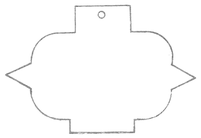

13200 VOLT FEEDER

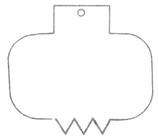

7200 VOLT FEEDER

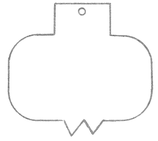

4800 & 5500 VOLT FEEDER

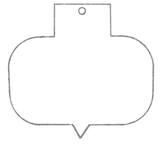

2400 VOLT FEEDER

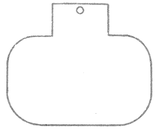

MISCELLANEOUS

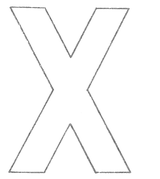

O.H. LINE PHASE TAG

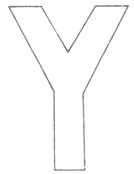

O.H. LINE PHASE TAG

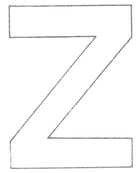

O.H. LINE PHASE TAG

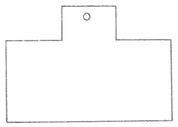

SUPERVISORY CONTROL

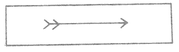

CIRCUIT DIRECTION

ST. LTG. COND. NO. (FROM 8/C CABLE)

ST. LTG. CIRC. NUMBER

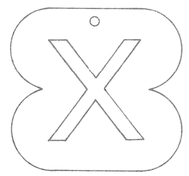

O.H. LINE OR POTHEAD PHASE TAG

O.H. LINE OR POTHEAD PHASE TAG

O.H. LINE OR POTHEAD PHASE TAG

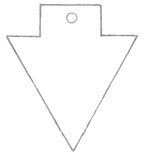

DEAD CABLE

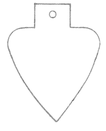

8 COND. CABLE

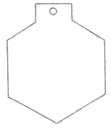

MULTIPLE LTG. CONTROL

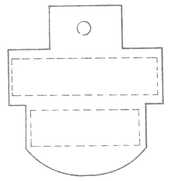

MULTIPLE STREET LIGHTING
ALL VOLTAGES

MULTIPLE INC. LTG.

TRAFFIC SIGNALS

SECONDARY POWER TO SAFETY
ISLANDS & TRAFFIC SIGNALS

TRAFFIC SIGNAL CHRONOLIZER

COMMUNICATION

SUBSTATION NAMES ON IDENTIFICATION TAGS SHALL BE SPELLED AS FOLLOWS

B.I.
BUTZL.
CNFLD.
CONNR
CUSTR
GRNFD.
HUDSN.
J. CAMP.
JOY RD.
LA BEL
LTHRP.
LUDDN.
MAPLE
MCRDY.
MTRSE
PAL. PK.
PHILP.
PORTR
RUSSL.
STNTN.
STONE
TRNTY.
TWNSD
TURNR.

WALTN.
WARRN.
WD. TER.

IDENTIFICATION TAGS
MATERIAL LEAD

NOTE:

LEAD CABLE IDENTIFICATION TAGS WILL BE FURNISHED TO CONTRACTOR BY P.L.D. CABLE TAG MARKINGS SUCH AS SUBSTATION OR CABLE MARKINGS WILL BE AS SHOWN ON PLANS OR WILL BE FURNISHED BY P.L.D.

208

DATE	DESCRIPTION	CHKD. BY

JEFFERSON/CONNER INDUSTRIAL REVITALIZATION PROJECT

MACK AVENUE LIGHTING

CABLE TAGS DETAILS

DRAWN CEA	PLAN PREPARED BY CONSULTING ENGINEERING ASSOCIATES INC. ENGINEERING CONSULTANTS 16580 WYOMING DETROIT, MICH., 48221		PUBLIC LIGHTING DEPARTMENT CITY OF DETROIT
CHECKED		CHECKED BY	
APPROVED			
DATE AUG. 87	DRWG. NO. 32 OF 40 / FILE NO. CEA 1137	APPROVED	DATE AUG. 87

FILE NO. 51-0606
SHEET NO. 109 OF 117

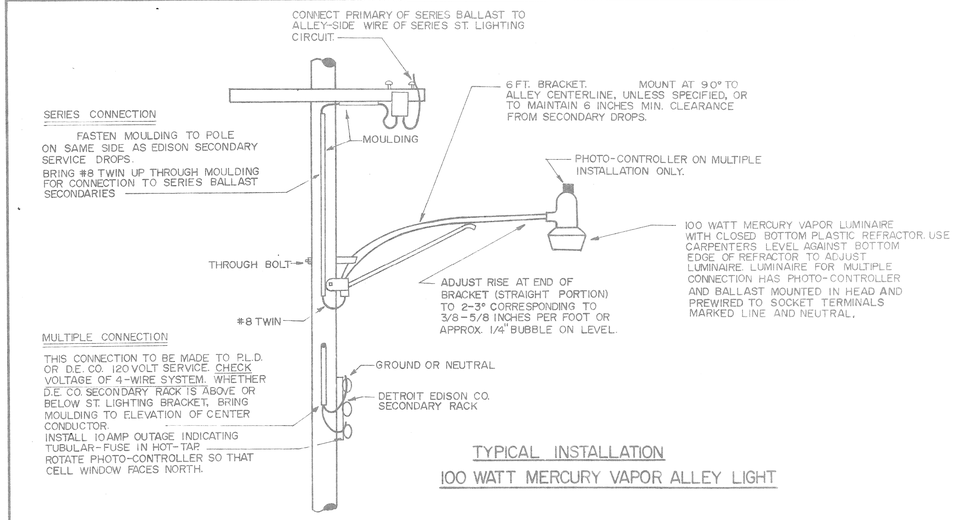

TYPICAL INSTALLATION
100 WATT MERCURY VAPOR ALLEY LIGHT

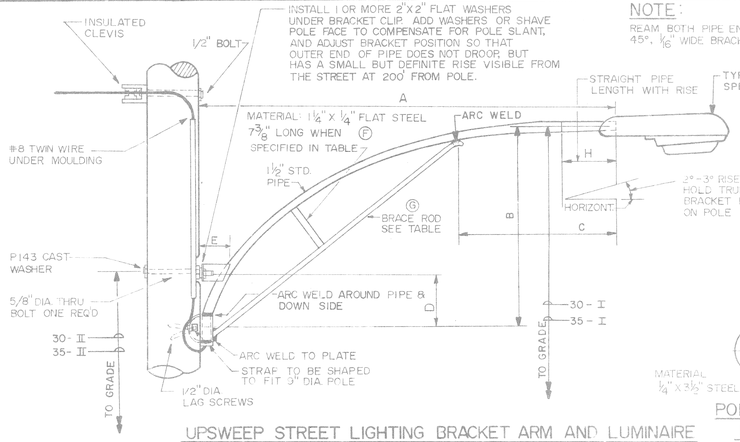

UPSWEEP STREET LIGHTING BRACKET ARM AND LUMINAIRE

NOTE:
REAM BOTH PIPE ENDS APPROX. 45°, 1/16" WIDE BRACKET T

ARM DIMENSION TABLE								
TYPE	A	B	C	D	E*	F	G	H
6 FT.	6'-0"	2'-8"	2'-5"	8 3/4"	5 1/2"	NO	1" SOLID	1'-2"
8 FT.	7'-8"	4'-0"	3'-0"	8 3/4"	4 1/2"	YES	1" SOLID	8"
10 FT.	10'-2"	2'-9"	3'-6"	8 7/8"	8"	NO	1" SOLID	2'-0"

*THIS DIMENSION IS APPROXIMATE

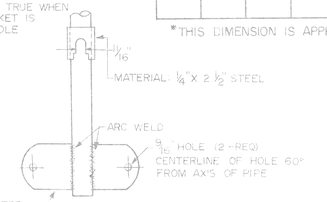

POLE STRAP DETAIL

ARM MOUNTING DIMENSION TABLE							
30 FT. LUM. MOUNTING HEIGHT				35 FT. LUM. MOUNTING HEIGHT			
	ARM LENGTH				ARM LENGTH		
	6 FT.	8 FT.	10 FT.		6 FT.	8 FT.	10 FT.
30 - I	30 FT.	30 FT.	30 FT.	35 - I	35 FT.	35 FT.	35 FT.
30 - II	—	26'-3"	28'-0"	35 - II	—	31'-3"	33'-0"

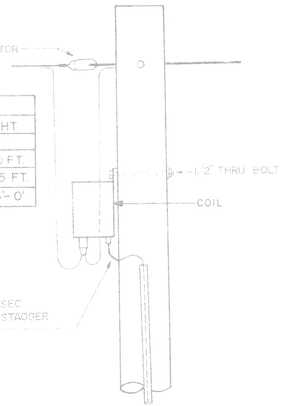

TYPICAL COIL INSTALLATION

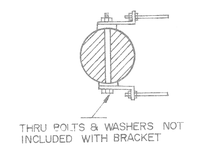

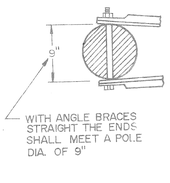

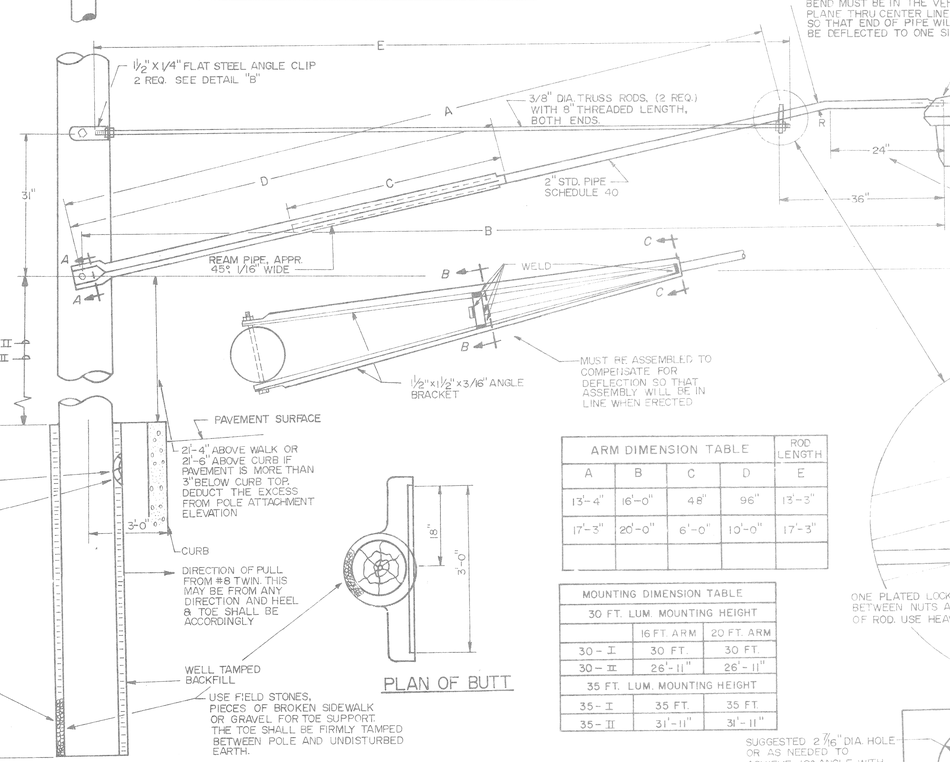

ELEVATION

PLAN OF BUTT

ARM DIMENSION TABLE					ROD LENGTH
A	B	C	D		E
13'-4"	16'-0"	48"	96"		13'-3"
17'-3"	20'-0"	6'-0"	10'-0"		17'-3"

MOUNTING DIMENSION TABLE		
30 FT. LUM. MOUNTING HEIGHT		
	16 FT. ARM	20 FT. ARM
30 - I	30 FT.	30 FT.
30 - II	26'-11"	26'-11"
35 FT. LUM. MOUNTING HEIGHT		
35 - I	35 FT.	35 FT.
35 - II	31'-11"	31'-11"

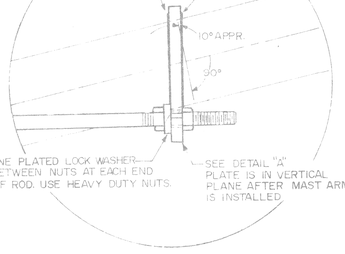

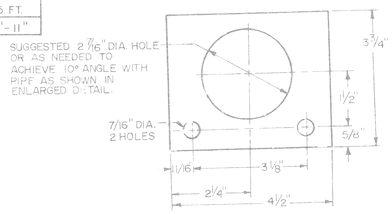

DETAIL "A"
STOCK 5/16" MILD STEEL

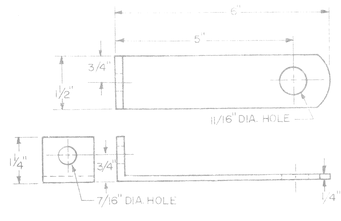

DETAIL "B"
2 REQ.

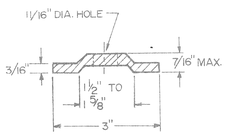

SECTION "A-A"

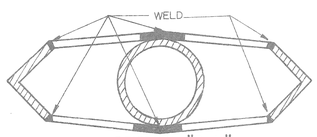

SECTION "B-B"

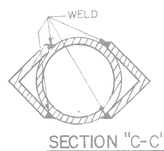

SECTION "C-C"

TYPICAL MARKING WOOD POLE TAGS

PLD 45' POLE SET IN 1960
STOCK 0.332" ALUMINUM MILL FINISH

USE 1/4" STEEL STAMP FOR LETTERING PIN.
SET MARKER 7'-0" ABOVE GRADE

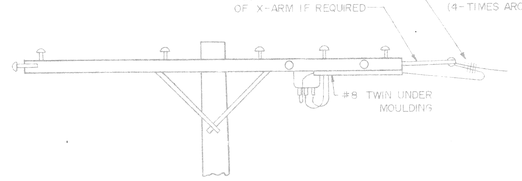

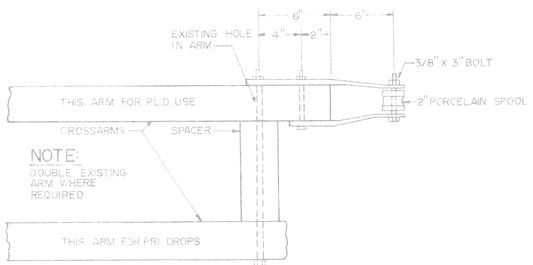

END OF ARM CONSTRUCTION FOR STREET LIGHTING AT TRANSFORMER OR CABLE POLES

ST. LTG. BRACKET ARM & LUMINAIRE

301

REVISIONS	DATE	DESCRIPTION	CHKD. BY

JEFFERSON/CONNER INDUSTRIAL REVITALIZATION PROJECT
MACK AVENUE LIGHTING
MISCELLANEOUS OVERHEAD DETAILS

DRAWN BY CEA
CHECKED BY
APPROVED BY SAM
DATE AUG 87

PLAN PREPARED BY
CONSULTING ENGINEERING ASSOCIATES INC.
ENGINEERING CONSULTANTS
16580 WYOMING DETROIT, MICH., 48221
DRWG. NO. 33 OF 40 FILE NO. CEA 1137

CHECKED BY
APPROVED BY

PUBLIC LIGHTING DEPARTMENT
CITY OF DETROIT

FILE NO. 51-0606
SHEET NO. 110 OF 117
DATE AUG 87

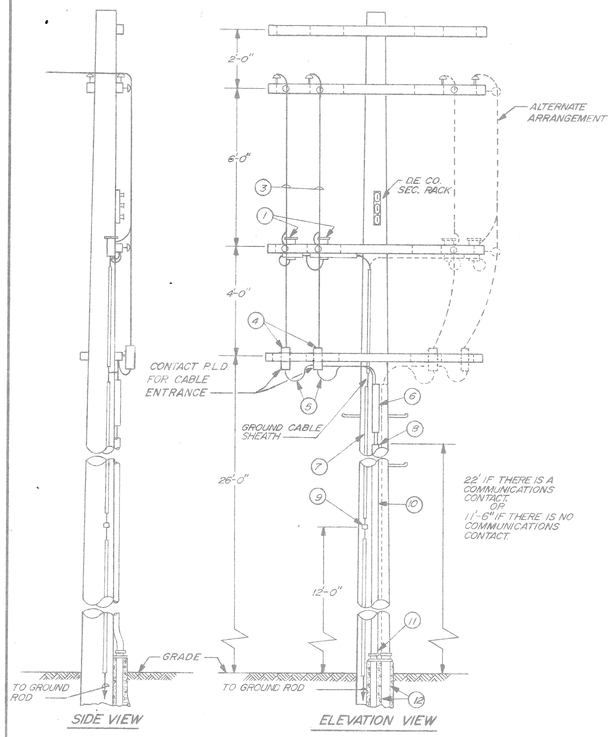

SERIES STREET LIGHTING CABLE POLE
N.T.S.

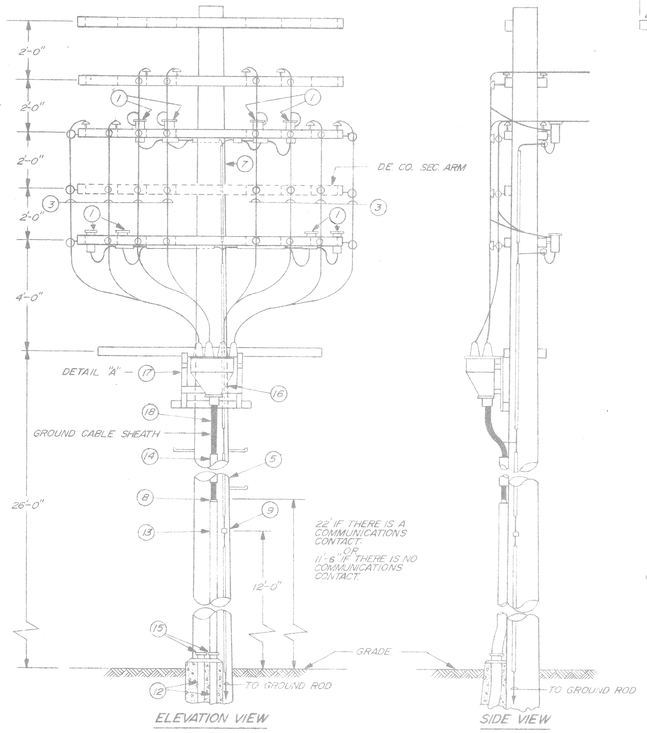

TYPICAL 8/C STREET LIGHTING CABLE POLE
N.T.S.

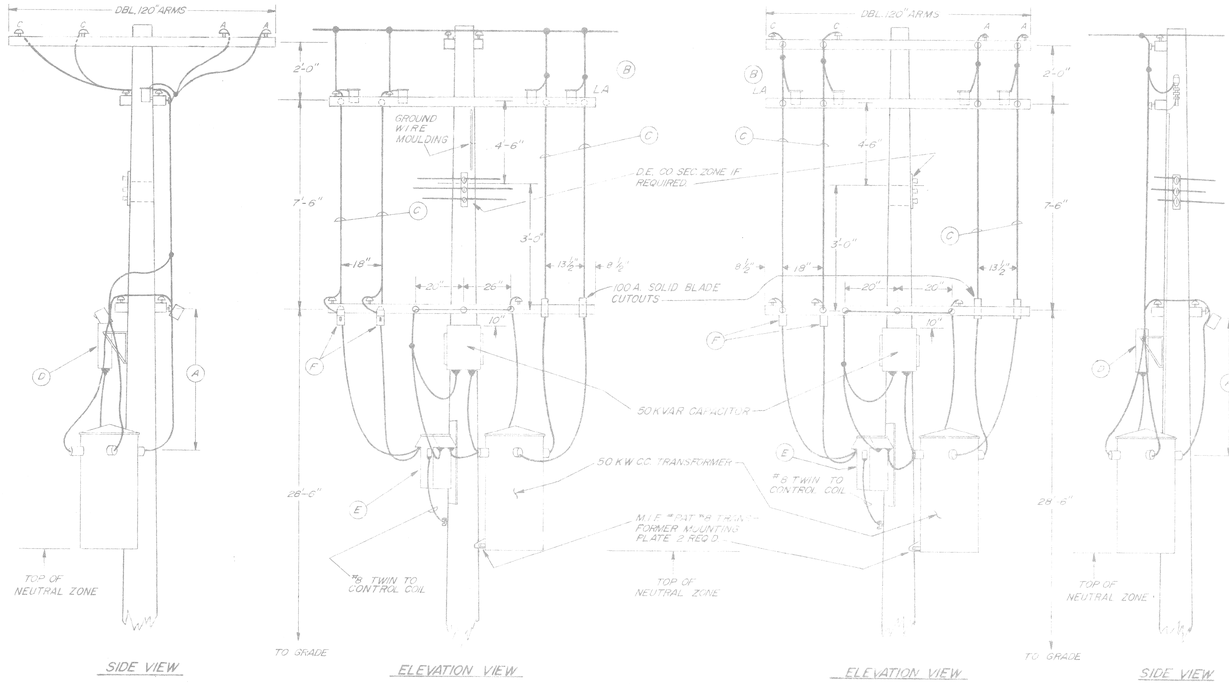

CONSTANT CURRENT ST. LTG. REGULATOR POLE
BUCK ARM INSTALLATION

CONSTANT CURRENT ST. LTG. REGULATOR POLE
LINE ARM INSTALLATION

	DETAIL ITEM
(1)	LIGHTNING ARRESTER
(2)	#6 OVERHEAD TRAINING WIRE (NEOPRENE COVERED WEATHERPROOF)
(3)	#8 OVERHEAD FLEXIBLE TRAINING WIRE
(4)	100A. SOLID BLADE CUTOUT
(5)	1/C # 8 L.C. CABLE
(6)	3" SPLIT-DUCT ABOVE G.I.P. TO 8" BELOW CROSSARM
(7)	# 2 GROUND WIRE UNDER MOULDING
(8)	LEAD WEATHERCAP & GALV. BUSHING
(9)	FOUR SCREW CONNECTOR
(10)	2 ½" G.I.P. RISER
(11)	2 ½" x 4" REDUCER ADAPTER
(12)	36" RADIUS PLASTIC BEND, NO. & SIZE OF CONDUIT AS SHOWN ON PLANS
(13)	3" G.I.P. RISER
(14)	4" SPLIT DUCT
(15)	3" x 4" REDUCER ADAPTER
(16)	8/C POTHEAD
(17)	8/C POTHEAD MOUNTING BRACKET (SEE DETAIL "A")
(18)	8/C L.C. CABLE

NOTES:

1. SEE P.L.D. DETAILS FOR GROUND ROD AND CONDUIT INSTALLATION.
2. INSTALL STEPS ON POLE FROM 8'-0" ABOVE GROUND TO 48" BELOW POTHEAD ARM.
3. INSTALL BRASS TAG ON EACH P.H. CAP & P.H. BODY. TAGS TO BE STAMPED WITH THE FOLLOW INFORMATION: STREET LIGHTING CIRCUIT NUMBER & "PLUS" TO INDICATE POSITIVE LEAD.
4. THE CONTRACTOR SHALL SUBMIT TO THE ENGINEER FOR APPROVAL A LIST OF ALL SPLICING MATERIALS HE PROPOSES TO USE WITH SUPPORTING DATA THAT THE MATERIAL IS SUITABLE FOR THE APPLICATION AS SHOWN ON THE DRAWINGS.

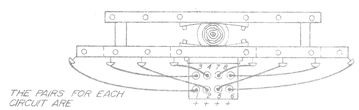

PLAN AT FIFTH GAIN INCLUDING 8/C POTHEAD
N.T.S.

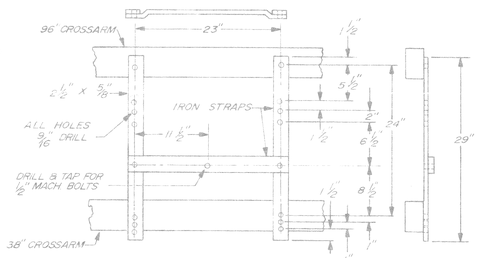

BRACKET FOR 8/C POLE TYPE POTHEAD
DETAIL "A" (17)

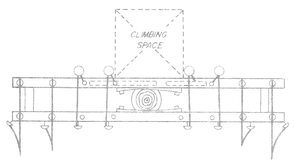

PLAN AT THIRD ARM
N.T.S.

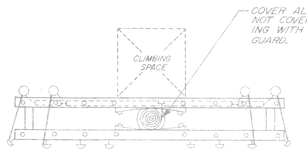

PLAN AT FIFTH ARM
N.T.S.

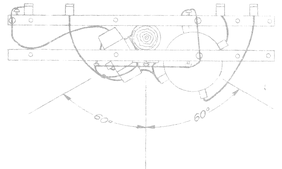

PLAN
N.T.S.

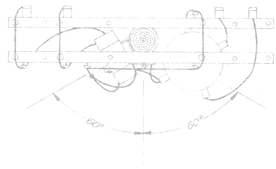

PLAN
N.T.S.

	DETAIL ITEM
A	TOP THRU BOLT, 5'-0" TO ARM (5'-6" FOR TOP PUSHED TRANSFORMER)
B	#8 OVERHEAD FLEXIBLE TRAINING WIRE
C	ALL TRAINERS #6 W.P. EXCEPT AS NOTED.
D	CAPACITOR CASE CONNECT TO PRI. L.A. GRD. WIRE.
E	SOUTH BEND OIL SWITCH 20 AMP. CONTROL.
F	100 AMP. ENCLOSED CUTOUTS, FUSE AS SPECIFIED.

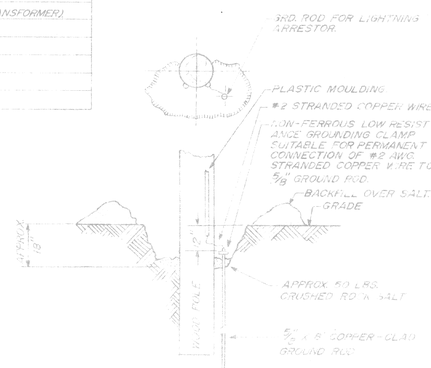

GROUND ROD INSTALLATION
N.T.S.

303

DATE	DESCRIPTION	CHK'D BY

JEFFERSON/CONNER INDUSTRIAL REVITALIZATION PROJECT

MACK AVENUE LIGHTING

SERIES STREET LTG CABLE POLE, 8/C ST LTG CABLE POLE & CONSTANT CURRENT ST LTG REGULATOR POLES

DRAWN CEA
CHECKED
SUPERVISOR

AUG 87

34 OF 40

CEA 1137

PLAN PREPARED BY CONSULTING ENGINEERING ASSOCIATES, INC. ENGINEERING CONSULTANTS 4990 WOODWARD AVENUE DETROIT, MICHIGAN 48201

APPROVED BY

PUBLIC LIGHTING DEPARTMENT

FILE NO. 51-0606

SHEET NO. 111 OF 117

AUG 87

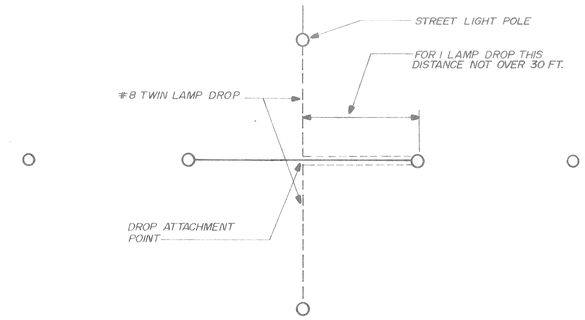

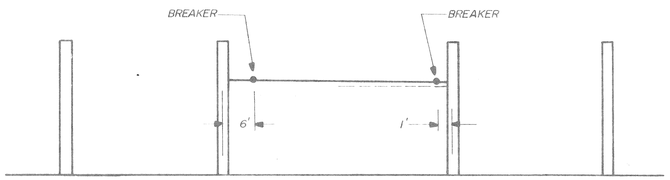

N.T.S.

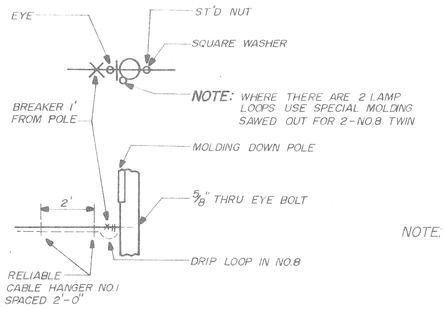

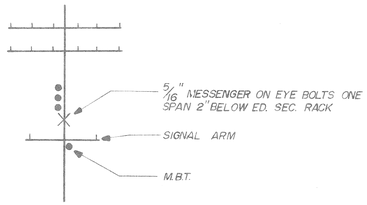

NOTE: INSTALL 3/8" MESSENGER SPAN FIRST WITH SAME SAG AS EDISON SEC. THEN INSTALL NO.8 TWIN DROPS. IN THE CASES WHERE THERE IS A SINGLE DROP AND THE ATTACHMENT POINT IS PULLED OUT AND UP READJUST SAG AT EYE BOLT.

(POLE DETAIL)

MESSENGER WIRE LAMP DROP SUPPORT: STANDARD INSTALLATION METHOD

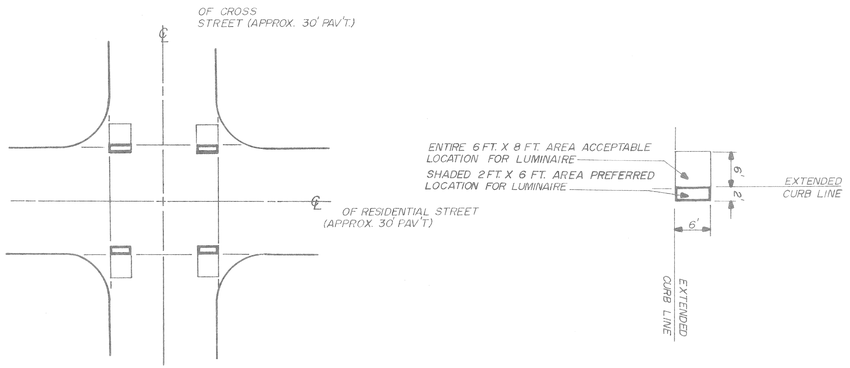

INSTALLATION OF RESIDENTIAL M.V. O.H. LUMINAIRE

N.T.S.

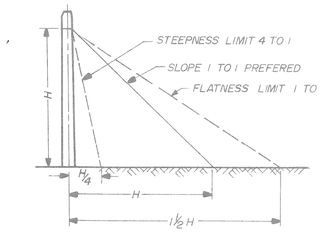

SLOPE LIMITS FOR ANCHOR GUYS

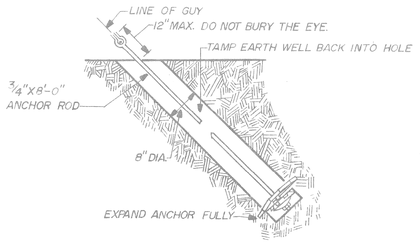

EXPANDING ANCHOR

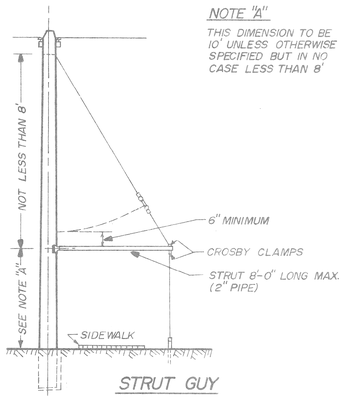

STRUT GUY

POLE HEIGHT	SETTING DEPTH
30'	6.0'
35'	6.0'
40'	6.0'
45'	6.5'
50'	7.0'
55'	7.5'
60'	8.0'

TYPICAL POLE SETTING DEPTH

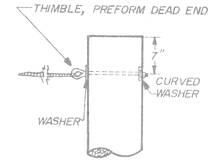

POLE GUY

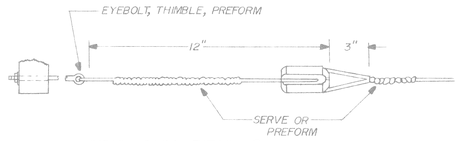

ARM GUY DETAILS

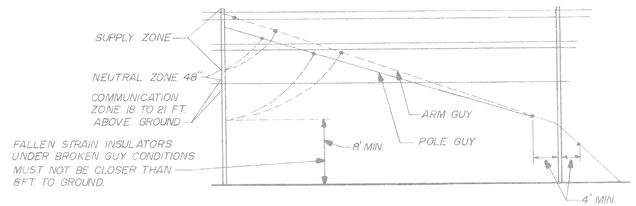

STRAIN INSULATOR POSITIONS IN GUY WIRES

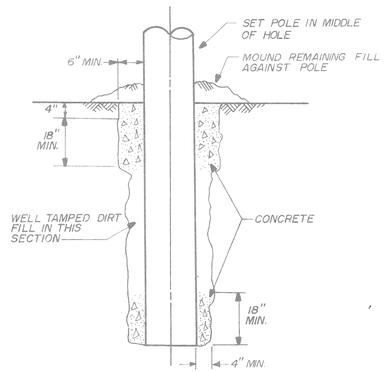

WOOD POLE IN CONCRETE

N.T.S.

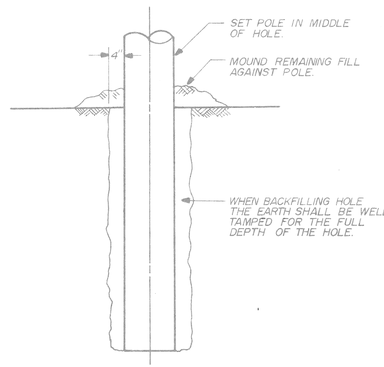

WOOD POLE INSTALLATION

N.T.S.

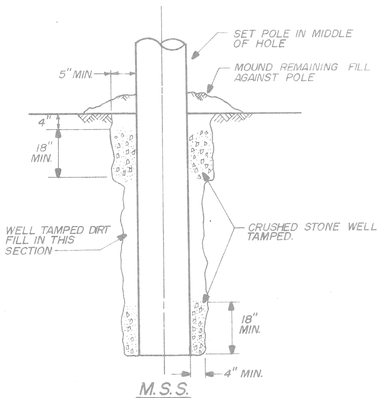

M.S.S.

SELF-SUPPORTING WOOD POLE IN CRUSHED STONE

305

REVISIONS	DATE	DESCRIPTION	CHKD. BY

JEFFERSON/CONNER INDUSTRIAL REVITALIZATION PROJECT

MACK AVENUE LIGHTING

MESSENGER WIRE INSTALLATION & MISC. DETAILS

DRAWN CEA	PLAN PREPARED BY CONSULTING ENGINEERING ASSOCIATES INC. ENGINEERING CONSULTANTS 16580 WYOMING DETROIT, MICH. 48221	DRAWN BY	PUBLIC LIGHTING DEPARTMENT CITY OF DETROIT
CHECKED		CHECKED BY	
APPROVED		APPROVED	
DATE AUG. 87	DRWG. NO. 35 OF 40 / FILE NO. CEA 1137		FILE NO. 51-0606 / SHEET NO. 112 OF 117 / DATE AUG. 87

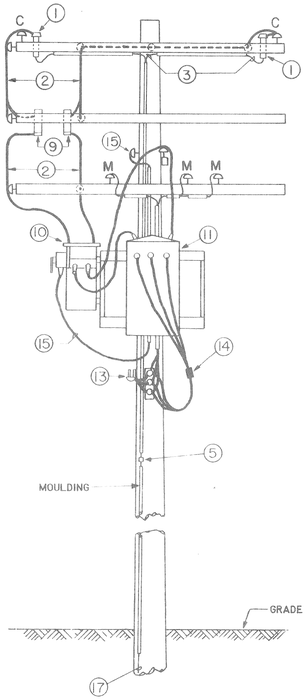

MULT. ST. LTG. TRANSFORMER POLE
DETAIL "A"
N.T.S.

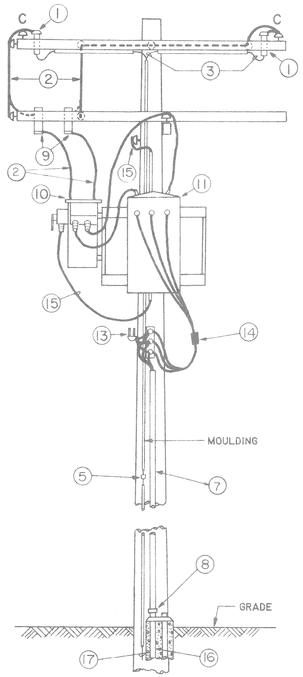

COMB. MULT. ST. LTG. TRANSFORMER POLE
& MULT ST. LTG. CABLE POLE
DETAIL "B"
N.T.S.

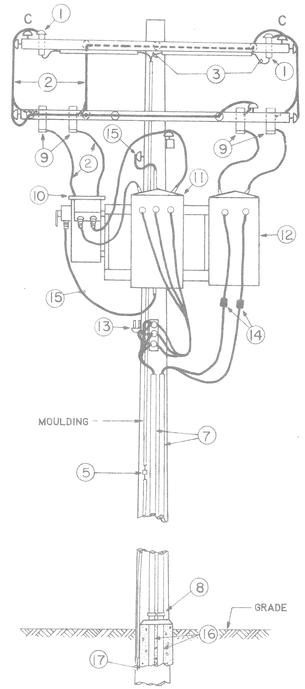

COMB. MULT. ST. LTG. TRANSFORMER POLE,
TRANSFORMER POLE, MULT. ST. LTG &
SECONDARY CABLE POLE
DETAIL "C"
N.T.S.

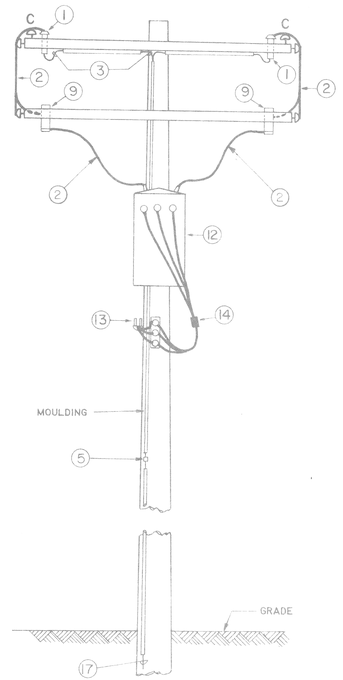

TRANSFORMER POLE
DETAIL "D"
N.T.S.

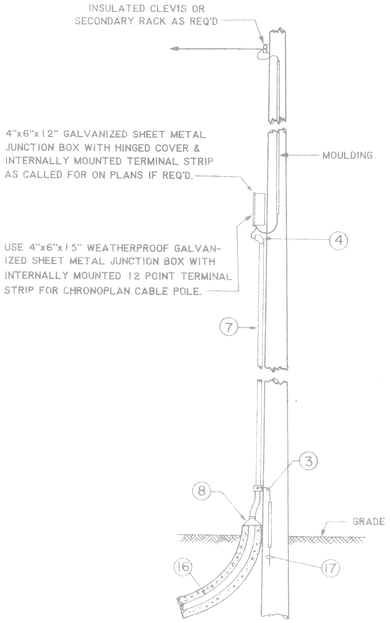

TYPICAL CHRONOPLAN, SECONDARY,
MULT. ST. LTG. & TRAFFIC SIGNAL
CABLE POLE
DETAIL "E"
N.T.S.

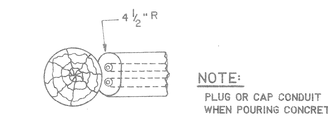

INSTALLATION OF CONDUIT
AT CABLE POLE
N.T.S.

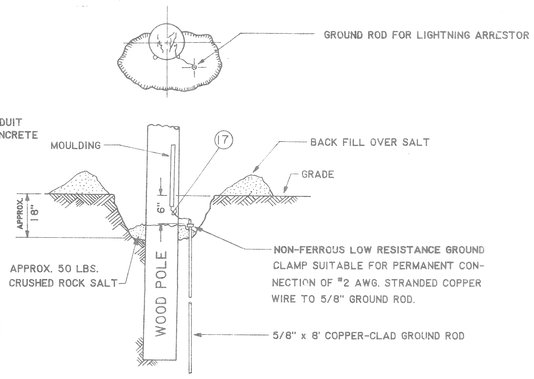

GROUND ROD INSTALLATION
N.T.S.

DETAIL ITEMS	
(1)	LIGHTNING ARRESTER
(2)	OVERHEAD TRAINING WIRE
(3)	#2 GROUND WIRE UNDER MOULDING
(4)	LEAD WEATHERCAP & GALVANIZED BUSHING
(5)	FOUR SCREW CONNECTOR
(6)	4" PLASTIC CONDUIT
(7)	3" G.I.P. RISER
(8)	3"x 4" REDUCER ADAPTOR
(9)	100A. ENCLOSED CUTOUT (FUSE AS SHOWN ON PLANS)
(10)	TRANSFOMER CONTROL SWITCH. 20A. CONTROL
(11)	MULT. ST. LTG. TRANSFORMER (SIZE & RATING AS SHOWN ON PLANS)
(12)	120/240V. SEC. TRANSFORMER (SIZE & RATING AS SHOWN ON PLANS)
(13)	SECONDARY LIGHTNING ARRESTER
(14)	C.T.S.I. IN-LINE FUSES (SIZE AS SHOWN ON PLANS)
(15)	#8 TWIN CONTROL (FROM CONTROL COIL AS SHOWN ON PLANS)
(16)	36" RADIUS PLASTIC BEND. NO. & SIZE OF CONDUIT AS SHOWN ON PLANS
(17)	#2 STRANDED COPPER WIRE TO GROUND ROD

REVISIONS	DATE	DESCRIPTION	CHKD. BY

JEFFERSON/CONNER INDUSTRIAL REVITALIZATION PROJECT
MACK AVENUE LIGHTING
TRANSFORMER POLE & CABLE POLE DETAILS

DRAWN: CEA	PLAN PREPARED BY: CONSULTING ENGINEERING ASSOCIATES INC. ENGINEERING CONSULTANTS		PUBLIC LIGHTING DEPARTMENT
CHECKED	16580 WYOMING DETROIT, MICH. 48221	CHECKED BY	CITY OF DETROIT
APPROVED SAH	DRWG. NO. 36 OF 40	APPROVED BY	
DATE: AUG. 87	FILE NO. CEA 1137		DATE: AUG. 87
			FILE NO: 51-0606
			SHEET NO. 113 OF 117

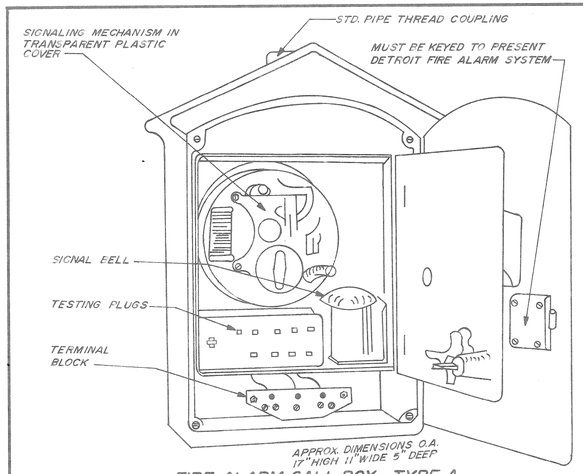

FIRE ALARM CALL BOX - TYPE A

DETROIT FIRE DEPT. SYSTEM

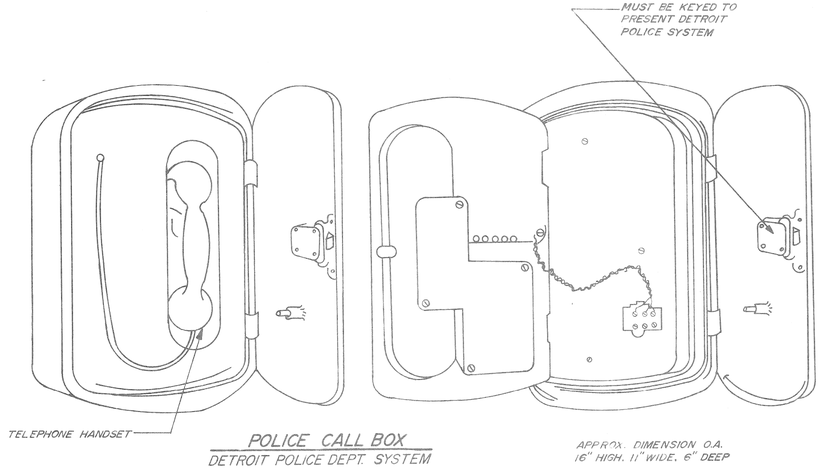

POLICE CALL BOX

DETROIT POLICE DEPT. SYSTEM

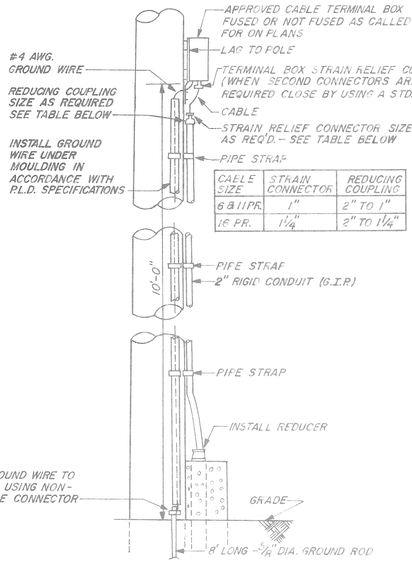

CABLE SIZE	STRAIN CONNECTOR	REDUCING COUPLING
6 & 11 PR.	1"	2" TO 1"
16 PR.	1¼"	2" TO 1¼"

COMM. DIV. CABLE POLE

N.T.S.

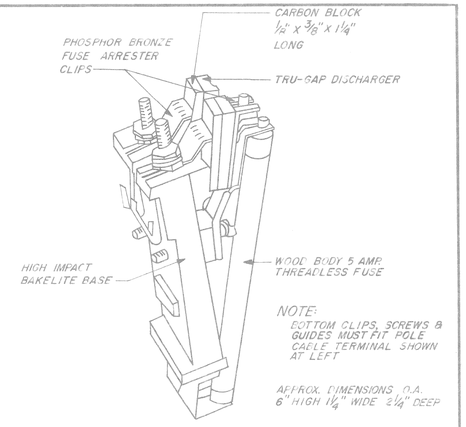

DUAL-GAP PROTECTOR MOUNT

N.T.S.

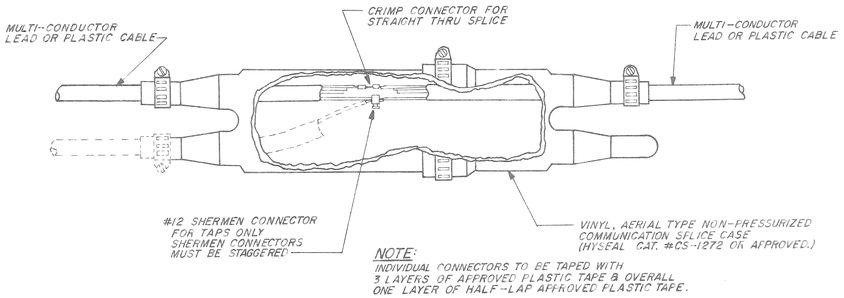

NOTE: INDIVIDUAL CONNECTORS TO BE TAPED WITH 3 LAYERS OF APPROVED PLASTIC TAPE & OVERALL ONE LAYER OF HALF-LAP APPROVED PLASTIC TAPE.

SPLICE DETAILS - COMMUNICATION & SUPERVISORY CABLES

N.T.S.

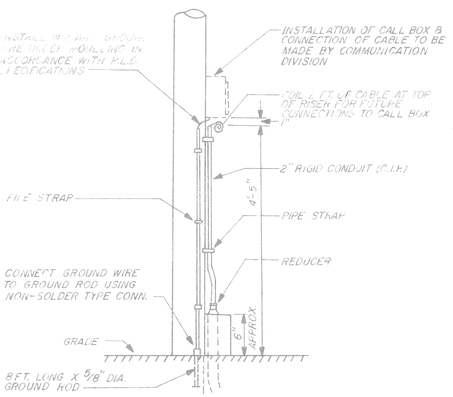

POLE CABLE TERMINAL

N.T.S.

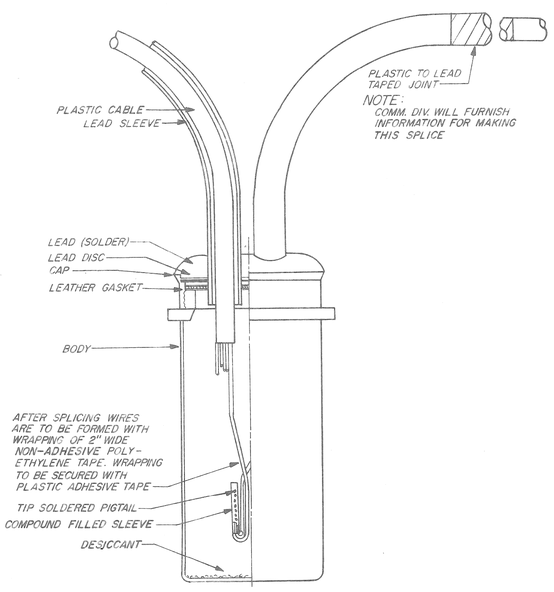

TESTHEAD DETAIL

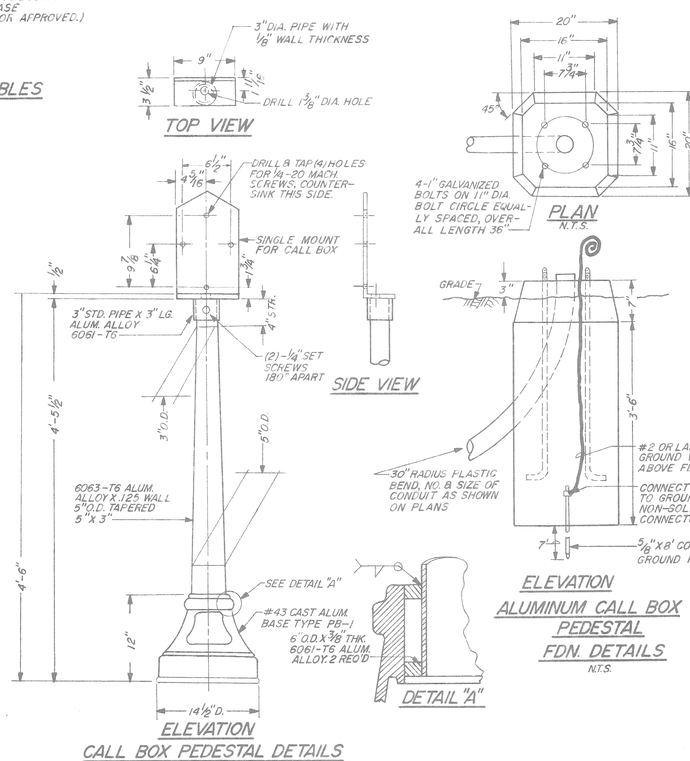

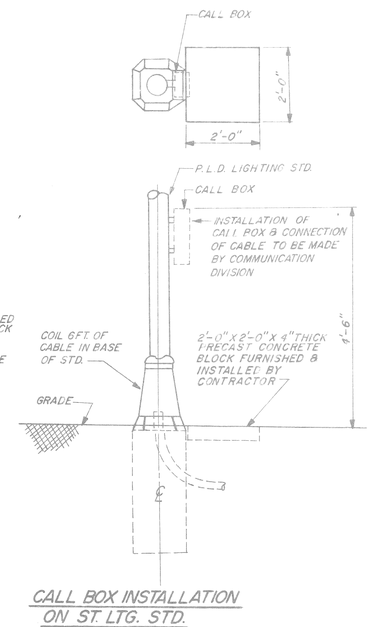

CALL BOX INSTALLATION ON WOOD POLE

N.T.S.

401

DATE	DESCRIPTION	CHKD. BY

REVISIONS

JEFFERSON/CONNER INDUSTRIAL REVITALIZATION PROJECT

MACK AVENUE LIGHTING

COMMUNICATION DETAILS

DRAWN	PLAN PREPARED BY CONSULTING ENGINEERING ASSOCIATES INC. ENGINEERING CONSULTANTS 16580 WYOMING DETROIT, MICH. 48221	CHECKED BY	PUBLIC LIGHTING DEPARTMENT CITY OF DETROIT
CHECKED			
APPROVED JM		APPROVED BY	
DATE AUG. 87	DRWG. NO. 37 OF 40 / FILE NO. CEA 1137		

FILE NO. 51-0606
SHEET NO. 114 OF 117
DATE AUG. '87

KOE 17 0153 3 73 MC 385-

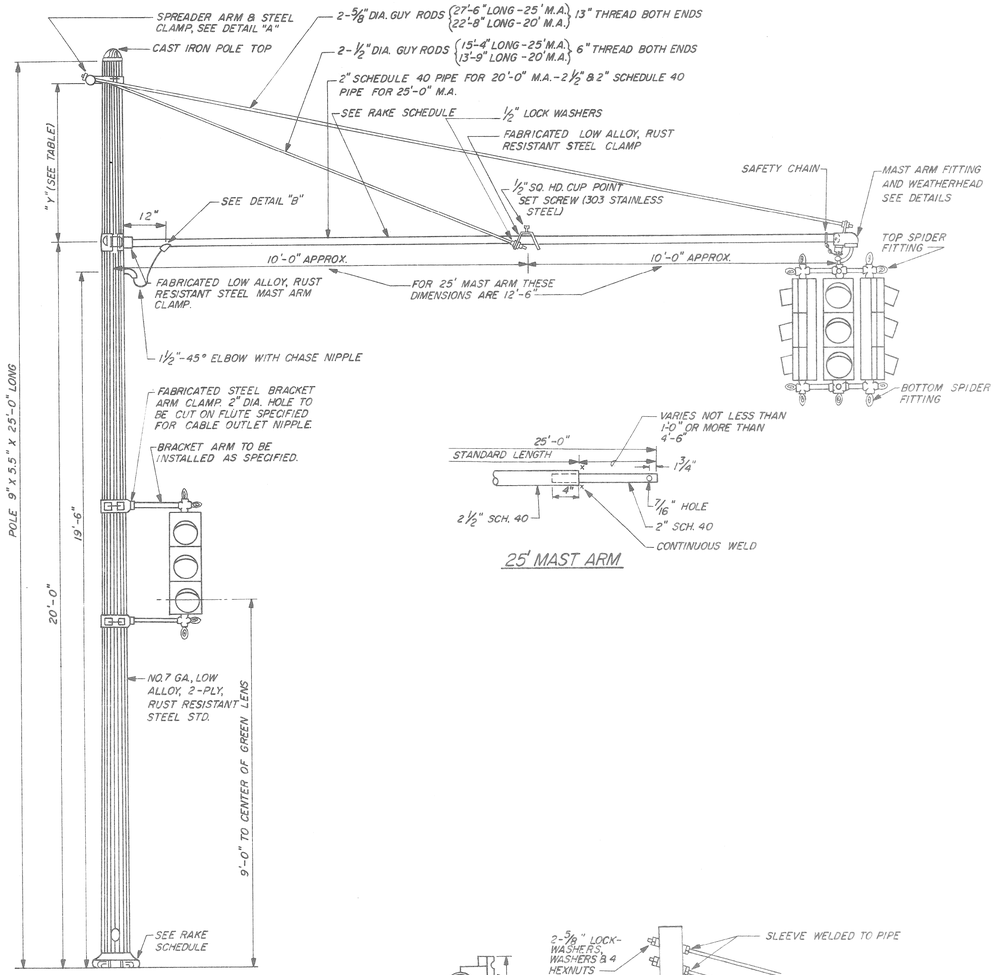

BACK-BRACE TYPE MAST ARM STD.
N.T.S.

25' MAST ARM

RAKE SCHEDULE				
	RAKE AT TOP OF POLE 180° FROM MAST ARM. USE STEEL U-SHAPED SHIMS			
25' M.A. / 20' M.A.	16 FLUTE M.A. STD.	8 FLUTE M.A. STD.	COMBINATION POLE	
4 WAY HD.	6" / 5"	3" / 2 1/2"	4" / 3 1/2"	
3 WAY HD.	4 1/2" / 3 1/2"	2" / 1 1/2"	3" / 2"	
2 WAY HD.	3" / 2"	1 1/2" / 1"	2" / 1 1/2"	
1 WAY HD.	1 1/2" / 1"	1" / 1"	1" / 1"	

NOTE: THE 25' M.A. SHALL BE INSTALLED WITH A RISE OF 1 1/2" IN ITS LENGTH & THE 20' M.A. SHALL RISE 1".

LIGHTING FIXTURES SHALL BE PLUMBED AFTER THE POLE IS RAKED & THE T.S. MAST ARM WHEN SIGNAL IS INSTALLED.

POLE SIZE	NUMBER OF FLUTES	DIMENSION "Y"
9" X 5.5" X 25'-0" MAST ARM STD.	8	4'-6"
10" X 6.5" X 25'-0" COMB. STD.	16	6'-4"
9" X 5" X 28'-6" COMB. STD.	8	5'-0"

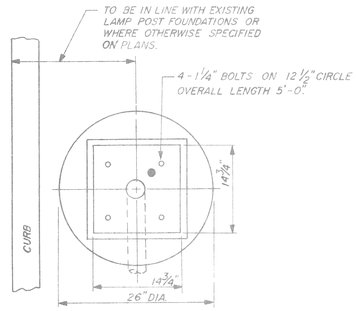

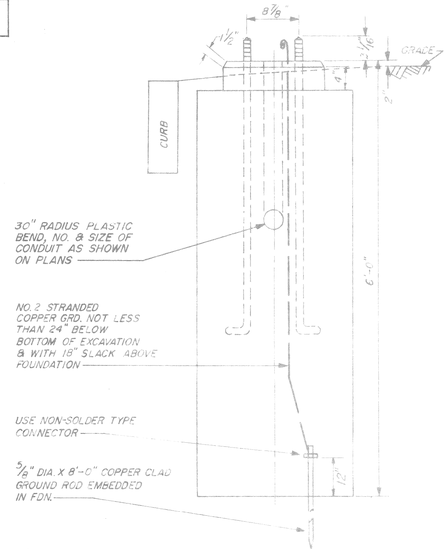

TRAFFIC SIGNAL MAST ARM STANDARD FOUNDATION 20 FT. & 25 FT. BACK-BRACE TYPE ONLY

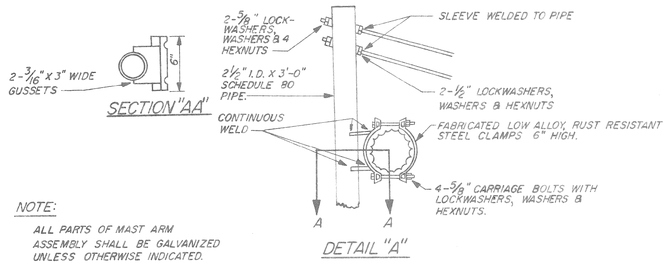

NOTE:
ALL PARTS OF MAST ARM ASSEMBLY SHALL BE GALVANIZED UNLESS OTHERWISE INDICATED.

DETAIL "A"

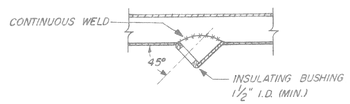

DETAIL "B"
25 FT. ARM ONLY

504

DATE	DESCRIPTION	CHKD. BY

53

JEFFERSON/CONNER INDUSTRIAL REVITALIZATION PROJECT

MACK AVENUE LIGHTING

T.S. BACK-BRACE TYPE MAST ARM ASSEMBLY DETAILS

DRAWN BY CEA
CHECKED BY
APPROVED BY SJH
DATE AUG. 87

PLAN PREPARED BY
CONSULTING ENGINEERING ASSOCIATES INC.
ENGINEERING CONSULTANTS
16580 WYOMING DETROIT, MICH. 48221

DRAWING NO. 38 OF 40
FILE NO. CEA 1137

CHECKED BY
APPROVED BY

PUBLIC LIGHTING DEPARTMENT
CITY OF DETROIT

FILE NO. 51-0606
SHEET NO. 115 OF 117
DATE AUG. '87

K&E 17 0153 9-74 MC 2684 •

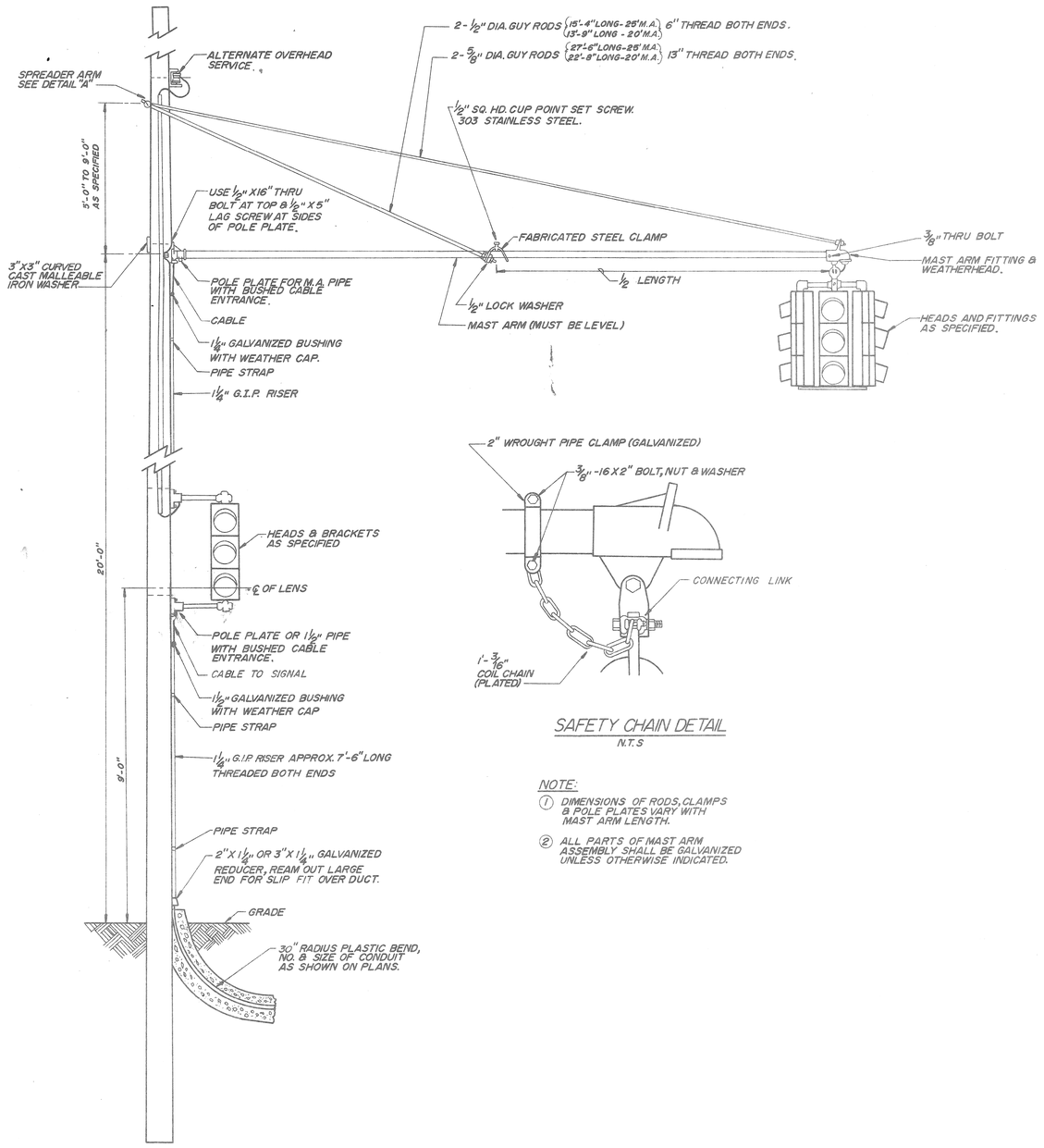

SAFETY CHAIN DETAIL
N.T.S

NOTE:
1. DIMENSIONS OF RODS, CLAMPS & POLE PLATES VARY WITH MAST ARM LENGTH.
2. ALL PARTS OF MAST ARM ASSEMBLY SHALL BE GALVANIZED UNLESS OTHERWISE INDICATED.

SECTION "Y-Y"
SHOWING GUY RODS ONLY

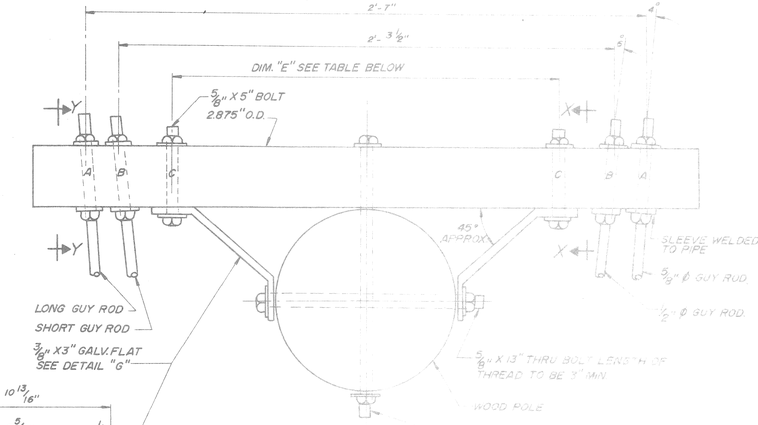

DETAIL "A"
N.T.S.

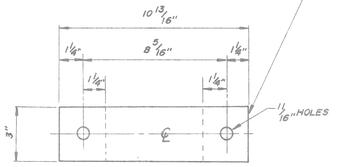

GALV FLAT
DETAIL "G"
N.T.S

WOOD POLE			
POLE SIZE	DIM. "E"	ANGLE "R"	DIM. "D"
35'	20"	29°	3/16"
40'	21"	21°	3/16"
45'	22"	7°	3/16"
50'	22 3/4"	7°	3/16"
STEEL TUBULAR POLE			
4"	15 1/2"	58°	1/16"
5"	16 9/16"	51°	1/16"
6"	17 5/8"	48°	1/16"

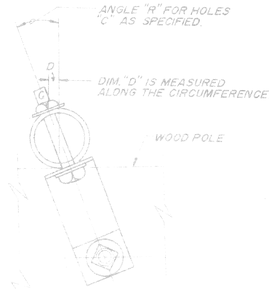

SECTION "X-X"

NOTE:
ALL PARTS TO BE GALVANIZED RED LEAD ALL HOLES & EDGES AFTER DRILLING & CUTTING.

DATE	DESCRIPTION	CHKD. BY

REVISIONS

54

JEFFERSON/CONNER INDUSTRIAL REVITALIZATION PROJECT

MACK AVENUE LIGHTING

T.S. BACK-BRACE TYPE MAST ARM ASSEMBLY ON WOOD POLE

DRAWN BY CEA
CHECKED BY
APPROVED BY
DATE AUG. 87

PLAN PREPARED BY
CONSULTING ENGINEERING ASSOCIATES INC.
ENGINEERING CONSULTANTS
16580 WYOMING DETROIT, MICH. 48221

DRWG. NO. 39 OF 40
FILE NO. CEA 1137

PUBLIC LIGHTING DEPARTMENT
CITY OF DETROIT

51-0006
116 OF 117
AUG. '87

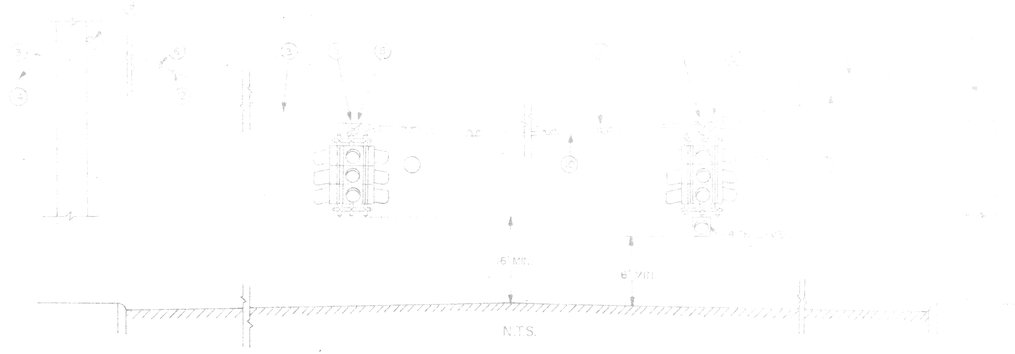

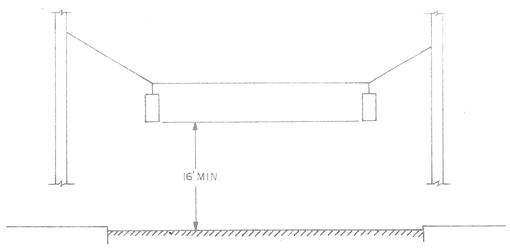

NO.	ITEM
1	TRAFFIC SIGNAL AS REQUIRED ON GENERAL PLAN
2	SPAN WIRE HANGER
3	3/8" GUY WIRE (USE SIEMENS-MARTIN AS PER SPEC.)
5	ARMOR ROD
6	STRAIN INSULATOR
8	3/4" EYEBOLT
9	SPLIT PLASTIC CONDUIT
10	#14 T.S. CABLE (AS SPECIFIED)
11	PREFORMED STEEL LASHING RODS
12	WIRE ROPE CLIPS OR PREFORMED DEAD ENDS
13	2/C-#8 CABLE FOR SERVICE (WHEN REQ'D)
14	3/8" GUY, GUARD AND ANCHOR

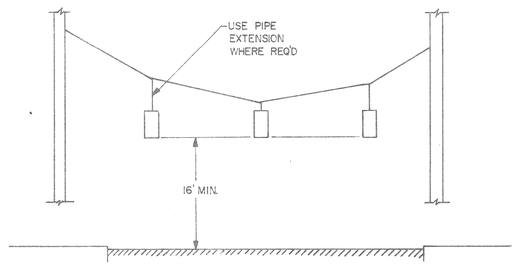

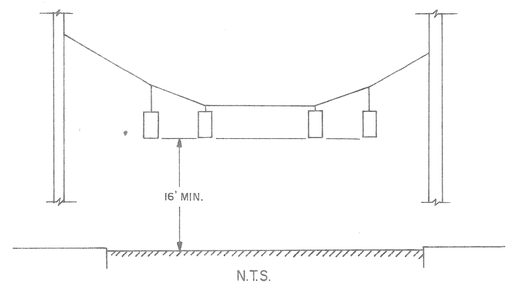

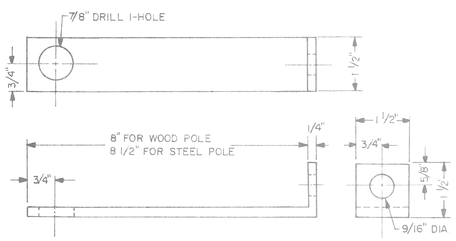

DETAIL "C"
CONTROLLER BRACKET MATERIAL FLAT STEEL
PRIME PAINT
N.T.S.

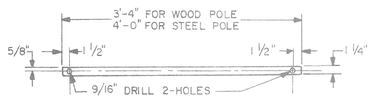

DETAIL "D"
CONTROLLER STRAP
MATERIAL 1/4" FLAT STEEL
PRIME PAINT
N.T.S.

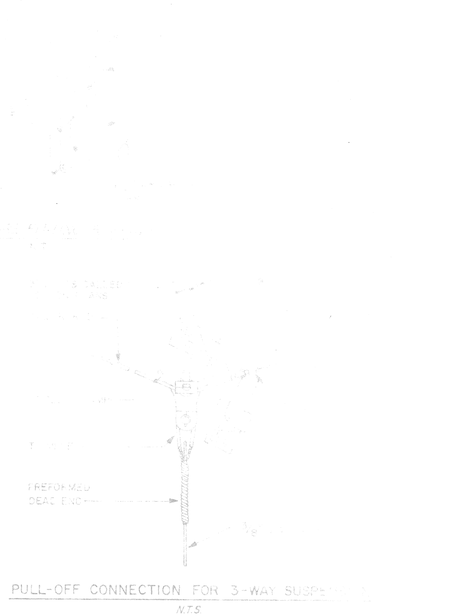

INSTALLATION OF TRAFFIC SIGNAL
CONTROLLER ON WOOD POLE
N.T.S.

REVISIONS	DATE	DESCRIPTION	CHKD. BY

55

JEFFERSON/CONNER INDUSTRIAL REVITALIZATION PROJECT

MACK AVENUE LIGHTING

WOOD POLE T.S. SPAN WIRE INSTALLATION DETAILS

DRAWN BY CE
CHECKED BY
APPROVED BY
DATE AUG.

...ISON MADISON
...NATIONAL, OF MICHIGAN
...tion with
...MMEN & BERGENDOFF

PLD

MACK AVENUE PLAN
FROM
STA. 11+09.42 TO STA. 22+00

SHEET 117 OF 117 SHEETS
JOB NO. 8627
SCALE: 1"=40'
DATE: SEPT. 3, 1987