K&E 17 0153 8-74 MC 2684

T-

# LEGEND

## UNDERGROUND PLAN

- EXISTING DIRECT BURIAL OR PARKWAY CABLE
- ABANDON DIRECT BURIAL OR PARKWAY CABLE
- INSTALL DIRECT BURIAL OR PARKWAY CABLE (NO. & SIZE AS INDICATED)
- 1-3" INSTALL DIRECT BURIAL CONDUIT (1-3" SHOWN)
- EXISTING SINGLE P.L.D. DUCT RUN
- 4-3" EXISTING P.L.D. DUCT RUN (4-3" SHOWN)
- 2-3" ABANDON EXISTING P.L.D. DUCT RUN (2-3" SHOWN)
- 4-4" BUILD ENCASED CONDUIT (4-4" SHOWN)
- 2-3" GALVANIZED STEEL CONDUIT, JACKING - BORING (2-3" SHOWN)
- EXISTING P.L.D. HANDHOLE
- M.H.1234 EXISTING P.L.D. MANHOLE
- BUILD ROUND HANDHOLE
- BUILD TYPE "D" HANDHOLE
- M.H.7890 BUILD NEW MANHOLE (2-WAY)
- M.H.1234 BUILD NEW MANHOLE (3-WAY)
- M.H.5678 BUILD NEW MANHOLE (CORNER)
- M.H.9012 BUILD NEW MANHOLE (4-WAY)
- BUILD TRAFFIC SIGNAL CONTROLLER FDN.
- BUILD T.S. MAST ARM STANDARD FDN.
- BUILD T.S. PEDESTAL FDN.
- INSTALL 30FT. STEEL STRAIN POLE ON NEW FDN.
- EXISTING FIRE OR POLICE CALL BOX
- INSTALL NEW FIRE OR POLICE CALL BOX (EXCEPT AS OTHERWISE INDICATED)
- INSTALL SALVAGED FIRE OR POLICE CALL BOX (EXCEPT AS OTHERWISE INDICATED)
- INSTALL MULT. ST. LTG. CONTROL CABINET ON NEW FDN.
- EXISTING U.G.-FED ST. LTG. UNIT
- EXISTING U.G.-FED ST. LTG. UNIT WITH DBL. ARM
- FUTURE U.G.-FED ST. LTG. UNIT
- REMOVE U.G.-FED ST. LTG. UNIT & FOUNDATION (EXCEPT AS OTHERWISE NOTED)
- INSTALL SALVAGED U.G.-FED ST. LTG. UNIT ON NEW FDN.
- "T" INDICATES TRAFFIC SIGNAL CONTACT ON ST. LTG. STD.

## OVERHEAD PLAN

- OE EXISTING WOOD POLE (D.E. CO. POLE SHOWN)
- ●C REMOVE WOOD POLE (P.L.D. POLE SHOWN)
- REPLACE WOOD POLE (HEIGHT & CLASS AS INDICATED)
- INSTALL 40FT. CLASS 4 WOOD POLE (EXCEPT WHERE OTHERWISE NOTED) (USE SALVAGED POLE WHERE INDICATED)
- EXISTING OVERHEAD ST. LTG. UNIT
- REMOVE OVERHEAD ST. LTG. UNIT
- INSTALL OVERHEAD ST. LTG. UNIT WITH 8FT. BRACKET ARM & LUMINAIRE AS PER PLANS. INSTALL SERIES COIL IF CALLED FOR. (USE SALVAGED UNIT WHERE NOTED)
- INSTALL NEW 100W. MERCURY VAPOR LUMINAIRE FOR ALLEY LTG. WITH NEW SERIES COIL & NEW 6FT. BRACKET ARM. (USE SALVAGED UNIT WHERE INDICATED)
- INDICATES 2-WAY — INSTALL NEW 250W. MERCURY VAPOR LUMINAIRE, TYPE I, (2-WAY OR 4-WAY AS SHOWN) FOR RESIDENTIAL LTG. WITH NEW SERIES COIL & NEW 10FT. BRACKET ARM. (EXCEPT WHERE OTHERWISE NOTED) (USE SALVAGED UNIT WHERE INDICATED)
- STA.-24 (2-#6) EXISTING OVERHEAD LINE (2-#6 OF STANTON-24 SHOWN)
- 3-#2 (STA-662) REMOVE OVERHEAD LINE (3-#2 OF STANTON-662 SHOWN)
- 2-#6 (STA.-24) INSTALL OVERHEAD LINE (2-#6 OF STANTON-24 SHOWN)
- 3-#6 (MULT.) INSTALL & LATER REMOVE OVERHEAD LINE (3-#6 MULT. SHOWN)
- 1/2" INSTALL GUY & ANCHOR (1/2" GUY SHOWN)
- REMOVE GUY & ANCHOR
- 1/2"P INSTALL POLE GUY (1/2" GUY SHOWN)
- 3/8"A INSTALL ARM GUY (3/8" GUY AS SHOWN)
- P OR A REMOVE GUY (TYPE AS INDICATED)
- IN. MATERIAL TO BE INSTALLED
- RM. MATERIAL TO BE REMOVED
- M.S.S. MAKE WOOD POLE SELF-SUPPORTING IN CRUSHED STONE
- XYZ PHASES OF P.L.D. DISTRIBUTION WIRES OR EQUIPMENT
- E D.E. CO. DISTRIBUTION WIRE
- es D.E. CO. SECONDARY WIRE
- C.P. CABLE POLE
- (C) INSTALL SUSPENSION INSULATOR
- EXISTING → C, PROPOSED → C — P.L.D. DISTRIBUTION WIRE
- EXISTING → CS, PROPOSED → CS — P.L.D. SECONDARY WIRE
- EXISTING → A, PROPOSED → A — P.L.D. SERIES ST. LTG. WIRE
- EXISTING → M, PROPOSED → M — P.L.D. MULTIPLE STREET LIGHTING WIRE

## GENERAL

- PROPERTY LINE
- EXISTING FACE OF CURB WHEN NEW STREET CONST.
- PROPOSED FACE OF CURB WHEN NEW STREET CONST. OR EXISTING FACE OF CURB WHEN NO STREET CONST.
- FUTURE PAVEMENT
- (S) — S — SEWER LINE, MANHOLE & CATCH BASIN
- (E) — E — DETROIT EDISON COMPANY U.G. LINE & MANHOLE
- (T) — T — MICH. BELL TEL. COMPANY U.G. LINE & MANHOLE
- (W) — W — WATERMAIN & GATEWELL
- (G) — G — MICH. CONSOLIDATED GAS CO. U.G. LINE & WELL
- (OTHER UTILITIES SHOWN SIMILAR)

## DIAGRAMS & CONDUIT ALLOCATION

(U.G.-FED STD. SYMBOLS SAME AS UNDERGROUND LEGEND OF THIS SHEET.)

- M.H. 1234 — PROPOSED MANHOLE
- M.H. 5678 — EXISTING MANHOLE
- H.H. — PROPOSED HANDHOLE
- H.H. — EXISTING HANDHOLE
- M.H. 1234 — PROPOSED MANHOLE IN SAME LOCATION AS EXIST. HOLE
- INSTALL U.G. CABLE OR O.H. WIRE AS NOTED
- EXISTING U.G. CABLE OR O.H. WIRE AS NOTED
- U.G. CABLE TO BE ABANDONED
- U.G. CABLE OR O.H. WIRE TO BE REMOVED AS NOTED
- (1) SECTION OF PROP. CONDUIT WITH PROP. CABLE
- (X) SECTION OF EXISTING CONDUIT WITH EXISTING CABLE
- (1/X) SECTION OF EXISTING CONDUIT WITH EXIST. AND PROP. CABLE
- 1-3" CONDUIT BROKEN OUT IN HANDHOLE
- 3-3" CONDUIT BY-PASSING HANDHOLE

4-3"

LEGEND

| | | |
|---|---|---|
| MULT. ST. LTG. CABLE | 1 | T.S. FEEDER CABLE |
| COMMUNICATION CABLE | 2 | T.S. CHRONOPLAN CABLE |
| PRI. DISTRIBUTION CABLE | 7 | T.S. CABLE |
| 24 KV. CABLE | 8 | SERIES ST. LTG. CABLE |
| | 6 | FUTURE CABLE |

12-3"

- DISCONNECT, INSULATE AND CAP CABLE END
- SPLICE STRAIGHT THRU
- SPLICES
- 1-#8 — INDICATES 7500V., 1-1/C #8 L.C. ST. LTG. CABLE
- 2#8 — INDICATES 7500V., 2-1/C #8 L.C. ST. LTG. CABLES
- 2/1 — INDICATES 2000V., 2-1/C #2/0 ST. LTG. CABLES & 1-#2/0 NEUTRAL
- 2/1 — INDICATES 2000V., 2-1/C #2 ST. LTG. CABLES & 1-#2 NEUTRAL (ALL UNLABELED CABLE GROUPS ON WIRING DIAGRAMS ARE SUCH)
- 1#2 — INDICATES 2000V., 1-1/C #2 ST. LTG. CABLE
- 1/1 — INDICATES 2000V., 1-1/C #2 ST. LTG. CABLE & 1-#2 NEUTRAL
- 3/1 — INDICATES 2000V., 3-1/C #2 ST. LTG. CABLES & 1-#2 NEUTRAL
- (3) — INDICATES GENERAL PLAN NO. OF AREA (APPLIES TO U.G. CABLE ITEMS ONLY)
- POR. 301 A1-1 — INDICATES NEW ST. LTG. STANDARD NUMBER
- POR. 24-26 — INDICATES OLD ST. LTG. STANDARD NUMBER

## TRAFFIC SIGNAL PLAN

- INSTALL 3-SECTION TRAFFIC SIGNAL (1-WAY SHOWN)
- INSTALL 3-SECTION TRAFFIC SIGNAL WITH SALVAGED HEADS (2-WAY SHOWN)
- REMOVE 3-SECTION TRAFFIC SIGNAL (3-WAY SHOWN)
- EXISTING 3-SECTION TRAFFIC SIGNAL (4-WAY SHOWN)
- INSTALL 2-SECTION PEDESTRIAN (WALK-DON'T WALK) TRAFFIC SIGNAL (2-WAY SHOWN)
- INSTALL 2-SECTION PEDESTRIAN (WALK-DON'T WALK) TRAFFIC SIGNAL WITH SALVAGED HEAD (1-WAY SHOWN)
- REMOVE 2-SECTION PEDESTRIAN (WALK-DON'T WALK) TRAFFIC SIGNAL (1-WAY SHOWN)
- EXISTING 2-SECTION PEDESTRIAN (WALK-DON'T WALK) TRAFFIC SIGNAL (1-WAY SHOWN)
- INSTALL JUNCTION BOX
- INSTALL SALVAGED JUNCTION BOX
- REMOVE JUNCTION BOX
- EXISTING JUNCTION BOX
- INSTALL OVERHEAD PLASTIC JACKETED CABLE
- EXISTING OVERHEAD PLASTIC JACKETED CABLE
- REMOVE OVERHEAD PLASTIC JACKETED CABLE
- INSTALL TRAFFIC SIGNAL CONTROLLER (NEW OR SALVAGED AS INDICATED) ON NEW FDN.
- INSTALL CANTILEVER TYPE TRAFFIC SIGNAL MAST ARM STANDARD & MAST ARM ON NEW FOUNDATION. (EXCEPT AS OTHERWISE INDICATED)
- INSTALL 8FT. TRAFFIC SIGNAL PEDESTAL ON NEW FOUNDATION (EXCEPT AS OTHERWISE INDICATED)
- INSTALL STEEL SHAFT POLE ON NEW FDN.
- EXISTING TRAFFIC SIGNAL CONTROLLER
- EXISTING MAST ARM STANDARD
- EXISTING PEDESTAL
- EXISTING STEEL SHAFT POLE
- BACK-OUT LAMPS & HOOD SIGNALS (INCIDENTAL TO INSTALLATION OF T.S. ON THIS CONTRACT).
- REMOVE HOOD & INSTALL LAMPS (INCIDENTAL TO INSTALLATION OF T.S. ON THIS CONTRACT).
- POCH — POLE CONTACT HEIGHT OF T.S. SPAN WIRE
- L.C.H. — LOW CONTACT HEIGHT OF SPAN WIRE T.S. TO SPAN WIRE
- (2) — INDICATES TYPE OF SIDEWALK RAMP TO BE CONSTRUCTED.

PLAN INDEX



| DRWG. NO | SUB-TITLE |
|---|---|
| 1 | LEGEND |
| 2 | GENERAL INFORMATION |
| 3 | GENERAL PLAN |
| 4 | TRAFFIC SIGNALS |
| 5 THRU 16 | DETAILS |
| 17 | QUANTITY SHEET |



| DATE | DESCRIPTION | CHKD. BY |
|---|---|---|
| | | |

KELLY RD. WIDENING
GRAYTON TO NORTH OF SEYMOUR
LEGEND M 2000 (171)

SHEET ____ OF ____ SHEETS
JOB NO.
ASSIGNMENT NO.
DATE

CITY OF DETROIT
CITY ENGINEERING DEPARTMENT

DRAWN CEA
CHECKED
APPROVED
DATE 11-1983

PLAN PREPARED BY
CONSULTING ENGINEERING ASSOCIATES INC.
ENGINEERING CONSULTANTS
16580 WYOMING DETROIT, MICH. 48221

DRWG. NO. 1 OF 17
FILE NO. CEA 1085

CHECKED BY
APPROVED BY

PUBLIC LIGHTING COMMISSION
CITY OF DETROIT

FILE NO. 48-0323
SHEET NO. 9 OF 25
DATE 11-1983

K&E 17 0153 8-74 MC 2684



# GENERAL INFORMATION SHEET

1. CALL MISS DIG (647-7344) 48 HRS. PRIOR TO ANY EXCAVATION FOR THE LOCATIONS OF UNDERGROUND UTILITIES.
2. CONTRACTOR TO NOTIFY MICH. CONS. GAS CO. AT WO-5-8000 IF PROTECTIVE COATED GAS MAIN IS EXPOSED OR DAMAGED.
3. A MINIMUM CLEARANCE OF 3'-6" HORIZONTAL & 1' VERTICAL MUST BE MAINTAINED BETWEEN PROPOSED P.L.D. FACILITIES & EXISTING WATER FACILITIES.
4. CONTRACTOR SHALL NOTIFY SYSTEM OPERATING DIVISION OF THE P.L.D 48 HRS. IN ADVANCE OF ANY WORK ON UNDERGROUND OR OVERHEAD TRANSMISSION, DISTRIBUTION, & ST. LTG. CIRCUITS. PHONE 224-0500
5. ALL EXISTING STREET LIGHTING, TRAFFIC SIGNAL, PRIMARY, TRANSMISSION ETC. CIRCUITS SHALL ALWAYS BE MAINTAINED IN AN OPERATIONAL CONDITION (EXCEPT WHERE OTHERWISE NOTED).
6. EXISTING O.H. & T.S. FACILITIES ARE NOT NECESSARILY SHOWN ON PLANS.
7. ALL OVERHEAD WIRES & UNDERGROUND CABLES SHALL CONSIST OF COPPER CONDUCTORS AS PER THE SPECIFICATIONS.
8. WHERE INSTALLATION OF NEW MANHOLES OVER EXISTING CONDUITS (TO ACCOMMODATE NEW & EXIST. CONDUITS) IS CALLED FOR ON PLANS, CONTRACTOR SHALL CAREFULLY & SO AS NOT TO DAMAGE EXIST. CABLES, REMOVE THE EXIST. CONDUITS & ENCASEMENT WITHIN MANHOLES. EXIST. CABLES SHALL BE EXTENDED & PROPERLY TRAINED, RACKED & SUPPORTED.
9. NEW CONDUITS BROKEN INTO EXISTING MANHOLES OR HANDHOLES SHALL NOT INTERFERE WITH RACKING AND/OR TRAINING OF CABLES. EXERCISE CAUTION INSTALLING NEW CABLES INTO EXIST. HOLES.
10. ALL CONDUITS NOT TERMINATING IN STRUCTURES SUCH AS MANHOLES, HANDHOLES OR FOUNDATIONS SHALL EXTEND 2FT. BEYOND PAVEMENT LIMIT (EXCEPT AS OTHERWISE INDICATED). ALL UNOCCUPIED CONDUITS SHALL BE PLUGGED.
11. WHERE ABANDONING OF U.G. CABLES IS CALLED FOR ON PLANS OR DIAGRAMS, CONTRACTOR SHALL CUT & REMOVE CABLES WITHIN MANHOLES & HANDHOLES.
12. UNDERGROUND CABLE QUANTITIES ARE ITEMIZED ON GENERAL PLANS. ALL CABLES SHALL BE TAGGED IN ALL MANHOLES & HANDHOLES. THIS INCLUDES EXIST. CABLES THAT ARE CONVERTED TO MULTIPLE, RECONNECTED TO OTHER CIRCUITS OR RENDERED DEAD.
13. ALL LUMINAIRES SHALL BE PROVIDED WITH 240V. INTERNAL BALLASTS (EXCEPT AS OTHERWISE NOTED).
14. THE CANDLEPOWER DISTRIBUTION FOR ALL MERCURY & SODIUM VAPOR ST. LTG. LUMINAIRES SHALL BE SEMI-CUTOFF, MEDIUM DISTRIBUTION OF TYPE AS INDICATED ON THE PLANS.
15. ALL NEW, SALVAGED & CONVERTED ST. LTG. STD'S. SHALL BE PAINTED.
16. ALL NEW & SALVAGED ST. LTG. STD'S. INSTALLED ON THIS CONTRACT & EXIST. ST. LTG. STD'S. CONVERTED OR RE-CONNECTED TO OTHER CIRCUITS SHALL BE STENCILLED OR RE-STENCILLED AS SHOWN ON PLANS. (STENCILLING & RESTENCILLING OF ST. LTG. STD'S. IS INCIDENTAL TO ST. LTG. STD.)
17. ALL TREE TRIMMING REQUIRED TO CLEAR NEW OR SALVAGED ST. LTG. & TRAFFIC SIGNAL STD'S. & O.H. LINES SHALL BE INCIDENTAL TO THE PAY-ITEM & NO EXTRA PAYMENT SHALL BE MADE.
18. WHERE TRIMMING OF TREES ON CITY PROPERTY IS CALLED FOR ON PLANS THE CONTRACTOR SHALL OBTAIN A PERMIT FROM THE RECREATION DEPT. OF THE CITY OF DETROIT AND SHALL HAVE SUCH WORK DONE BY A LICENSED TREE SERVICE CONTRACTOR. CALL MR. CRAIG GRANT AT 931-3950.
19. WHERE U.G. UTILITIES INTERFERE WITH THE INSTALLATION OF A NEW FOUNDATION, INSTALL THE SPECIAL FOUNDATION OF PARTICULAR DIMENSIONS AS INDICATED ON THE DETAIL DRWG. TO SUIT THE FIELD CONDITION. THERE WILL BE NO EXTRA PAYMENT FOR THE SPECIAL FOUNDATION. IT WILL BE PAID FOR AS A NORMAL FOUNDATION.
20. ALL NEW U.G.-FED ST. LTG. UNITS SHALL BE INSTALLED 2'-6" BACK OF CURB UNLESS OTHERWISE INDICATED ON PLANS.
21. BAND INSULATED CLEVIS TO ST. LTG. STD. SHAFT. BRING U.G. CABLES THRU TOP OF SHAFT WITH WEATHERCAP TO FIT SHAFT OPENING. STORE SHAFT CAP IN BASE OF STANDARD. CONNECTION OF O.H. WIRES TO U.G. CABLES SHALL BE MADE OUTSIDE OF SHAFT (INCIDENTAL TO INSTALLATION OF O.H. WIRES).
22. BAND SEC. RACK TO ST. LTG. STD. SHAFT. BRING U.G. CABLES THRU TOP OF SHAFT WITH WEATHERCAP TO FIT SHAFT OPENING. STORE SHAFT CAP IN BASE OF STD. CONNECTION OF O.H WIRES TO U.G. CABLES SHALL BE MADE OUTSIDE OF SHAFT (INCIDENTAL TO INSTALLATION OF O.H. WIRES).
23. REMOVE WEATHERCAP & INSULATED CLEVIS OR SEC. RACK FROM ST. LTG. STD. SHAFT. MOUNT SHAFT CAP ON ST. LTG. STD. (INCIDENTAL TO REMOVAL OF O.H. WIRES).
24. FOR LOCATIONS OF P.L.D. INSTALLATIONS ON STRUCTURES SUCH AS CONDUITS, HANDHOLES, CONDUIT SLEEVES, GALVANIZED STEEL CONDUITS & ST. LTG. STD. ANCHOR BOLTS SEE STRUCTURE PLANS.
25. INSTALLATION OF ARMS FOR EQUIPMENT, CUTOUTS, POTHEADS, TRANSFORMERS, ETC. ARE NOT SHOWN ON NEW CABLE AND TRANSFORMER POLES. THEY SHALL BE INSTALLED AS PER THE DETAIL DRWG. REQUIREMENT AND SHALL BE INCIDENTAL TO THE FITTING-UP OF THE CABLE AND/OR TRANSFORMER POLE.
26. ALL TRANSFORMER POLES AND CABLE POLES SHALL BE FITTED UP WITH 120" ARMS (EXCEPT WHERE OTHERWISE NOTED).
27. ALL NEW ANCHOR GUYS SHALL BE INSTALLED ON A 1:1 RATIO OR AS NEARLY AS POSSIBLE (EXCEPT WHERE OTHERWISE NOTED. STRUT GUYS ARE EXCEPTED.
28. ALL POTHEADS ON PRIMARY DISTRIBUTION CABLE POLES SHALL BE FLAT DIVERGENT DISCONNECTING TYPE.
29. INSTALL WOOD POLES SO AS NOT TO INTERFERE WITH TRAFFIC OR FUTURE CONSTRUCTION STAGES.
30. CROSSARMS SHALL BE REMOVED AFTER ALL CONTACTS ARE REMOVED (INCIDENTAL TO REMOVAL OF OVERHEAD LINES).
31. WHERE REMOVAL OF LUMINAIRES IS CALLED FOR ON PLANS THE ASSOCIATED O.H. SERIES COIL SHALL BE REMOVED BY THE CONTRACTOR (REMOVE O.H. COIL IS INCIDENTAL TO REMOVE LUMINAIRE).
32. WHERE A P.L.D. WOOD POLE WITH OTHER UTILITY CONTACTS IS TO BE REMOVED THE P.L.D. INSPECTOR WILL INDICATE IF THE POLE IS IN FACT TO BE REMOVED.
33. ALL SALVAGED WOOD POLES SHALL BE POLES PREVIOUSLY INSTALLED NEW ON THIS CONTRACT.
34. ALL TRAFFIC STREET SIGNS SUCH AS "NO PARKING", "NO STANDING" ETC. SHALL BE TRANSFERED FROM OLD ST. LTG. STD. TO NEW ST. LTG. STD. AT SAME LOCATION OR ON NEW STD. IN CLOSE PROXIMITY BY DEPT. OF TRANSPORTATION. (OR WOOD POLES)
35. PROPOSED T.S. SHALL BE PUT INTO OPERATION AT TIME OF REMOVAL OF EXISTING T.S. FACILITIES. CONTRACTOR SHALL NOTIFY THE P.L.D. INSPECTOR IF HE IS UNABLE TO MAINTAIN T.S. IN OPERABLE CONDITION AT ALL TIMES.
36. ALL TRAFFIC SIGNALS SHALL BE MOUNTED WITH NEW STANDARD TRAFFIC SIGNAL BRACKET & FITTINGS.
37. ALL TRAFFIC SIGNAL ITEMS AS CALLED FOR ON PLANS SHALL INCLUDE AS INCIDENTAL TO THE TRAFFIC SIGNAL ALL CABLES FROM THE CONTROLLER TO THE TRAFFIC SIGNALS & FOUNDATIONS AS INDICATED.
38. CONTRACTOR SHALL DELIVER WHERE REQUIRED TO THE PUBLIC LIGHTING DEPARTMENT THE T.S. CONTROLLER FOR TIMING. CONTRACTOR SHALL PICK-UP CONTROLLER FROM THE PUBLIC LIGHTING DEPARTMENT WHEN READY FOR INSTALLATION.
39. ALL SALVAGED TRAFFIC SIGNALS SHALL BE TRAFFIC SIGNALS PREVIOUSLY INSTALLED NEW ON THIS CONTRACT (EXCEPT AS OTHERWISE INDICATED).
40. FOR TRAFFIC SIGNAL SPAN WIRES USE ½" SIEMANS-MARTIN GRADE AS SPECIFICATION.
41. ALL TRAFFIC SIGNAL LAMPS SHALL BE PURCHASED FROM THE PUBLIC LIGHTING DEPARTMENT.
42. SEAL-END OF CABLE WHERE COILING UP OF CABLE IS CALLED FOR (CONTRACTOR SHALL RECEIVE PAYMENT FOR COILED-UP CABLES)
43. D.S.R. STREETCAR RAILS AND FOUNDATIONS (TRACKS) ARE SHOWN ON THE PLANS IN ACCORDANCE WITH THE BEST AVAILABLE INFORMATION. EXACT LOCATIONS WITHIN THE STREETS & INTERSECTIONS ARE NOT KNOWN. SOME RAILS MAY HAVE BEEN REMOVED.
44. SIDEWALK RAMPS OF THE TYPE & LOCATION AS SHOWN ON THE PLANS OR AS DIRECTED BY THE ENGINEER SHALL BE CONSTRUCTED.
45. "CONDUIT REPAIR - UNDER PAVEMENT" AND "CONDUIT REPAIR UNDER SIDEWALK OR DIRT" SHALL INCLUDE LOCATING EXISTING P.L.D. CONDUIT BREAKDOWN OR RUPTURE AT A POINT LOCATED IN THE EXISTING CONDUIT INSTALLATION WHETHER A SINGLE CONDUIT OR MULTIPLE OF TWO OR MORE. THE WORK SHALL INCLUDE EXCAVATION AT THE POINT OF BREAKDOWN, CHIPPING & BREAKING AWAY THE CONCRETE ENCASEMENT, INSTALLING A CONDUIT SLEEVE TO REPLACE THE CUTAWAY OR REMOVED SECTION OF DEFECTIVE CONDUIT, GROUTING THE CONCRETE ENCASEMENT TO ITS ORIGINAL THICKNESS THEN BACKFILLING THE EARTH AND REPAIRING THE SIDEWALK OR PAVEMENT. EXERCISE CARE NOT TO DAMAGE EXISTING ENERGIZED CABLES. NOTE: NONE OF THIS WORK SHALL BE UNDERTAKEN UNTIL FIRST CONTACTING THE PROJECT ENGINEER.
46. INSTALL 600V, 1-6 PR. #16 T.M. SHIELDED CABLE FOR CHRONOPLAN 1'-0" BELOW D.E. CO. SECONDARY (EXCEPT WHERE OTHERWISE NOTED).
47. PAVEMENT, SIDEWALK, & CURB REMOVAL AND REPLACEMENT SHALL BE DONE ACCORDING TO CITY OF DETROIT SPECIFICATION.
48. T.S. JUNCTION BOX SHALL BE MOUNTED 2FT. (MAX) FROM SPAN WIRE T.S. NEAREST TO T.S. FEED SOURCE.
49. CONTRACTOR TO NOTIFY D.E.CO., MR. J. TYSON AT 237-9564 IF PROTECTIVE COATING OF ANY D.E.CO. HIGHVOLTAGE UNDERGROUND LINE IS EXPOSED OR DAMAGED.

| DATE | DESCRIPTION | APR. BY |
|---|---|---|
| | | |

KELLY RD. WIDENING
GRAYTON TO NORTH OF SEYMOUR
GENERAL INFORMATION & AREA MAP M 2000 (171)

SHEET ____ OF ____ SHEETS
JOB NO.
ASSIGNMENT NO.
DATE

CITY OF DETROIT
CITY ENGINEERING DEPARTMENT

DRAWN CEA
CHECKED
APPROVED
DATE 11-1983

PLAN PREPARED BY
CONSULTING ENGINEERING ASSOCIATES INC.
ENGINEERING CONSULTANTS
16580 WYOMING DETROIT, MICH. 48221
DRWG. NO. 2 OF 17
FILE NO. CEA 1085

DRAWN BY
CHECKED BY
APPROVED BY

PUBLIC LIGHTING COMMISSION
CITY OF DETROIT

FILE NO. 48-0323
SHEET NO. 10 OF 25
DATE 11-1983

IMAGE MEDIA® 72336

T-

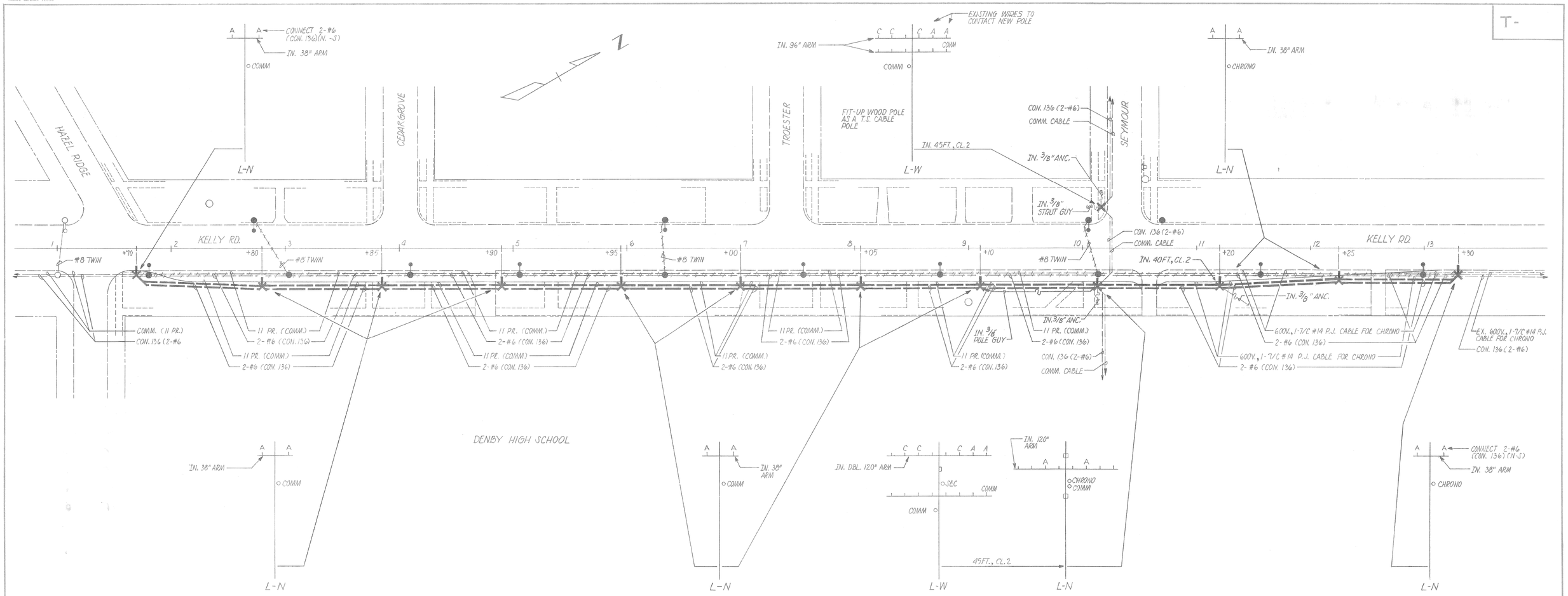


PLAN
SCALE: 1" = 40'

NOTE:

1. ALL WOOD POLES SHALL BE SET 4'-0" BACK OF CURB. (EXCEPT WHERE OTHERWISE INDICATED).

| LIST OF MATERIAL | |
|---|---|
| ITEM | QUANTITIES |
| REMOVE WOOD POLE | 14 EACH |
| REMOVE O.H. ST. LTG. UNIT | 10 EACH |
| REMOVE #8 TWIN | 150 LIN. FT. |
| REMOVE 11 PR. (COMM.) | 840 LIN. FT. |
| REMOVE 600V., 1-7/C #14 P.J. CABLE FOR CHRONOPLAN | 320 LIN. FT. |
| REMOVE 2-#6 O.H. LINE | 1195 LIN. FT. |
| 40 FT., CLASS 4 WOOD POLE | 10 EACH |
| 45 FT., CLASS 2 WOOD POLE | 2 EACH |
| 400W. MERCURY VAPOR O.H. ST. LTG. UNIT WITH SERIES COIL | 12 EACH |
| 11 PR. (COMM.) | 850 EACH |
| 600V., 1-7/C #14 P.J. CABLE FOR CHRONOPLAN | 330 EACH |
| 2-#6 O.H. LINE | 1165 EACH |
| FIT-UP WOOD POLE AS A T.S. CABLE POLE | 1 EACH |
| 40 FT., CLASS 2 WOOD POLE | 1 EACH |
| | |
| | |

| DATE | DESCRIPTION | CHKD. BY |
|---|---|---|
| | | |

REVISIONS

KELLY RD. WIDENING
GRAYTON TO NORTH OF SEYMOUR

SHEET ____ OF ____ SHEETS
JOB NO.
ASSIGNMENT NO.
DATE

CITY OF DETROIT
CITY ENGINEERING DEPARTMENT

DRAWN C.E.A.
CHECKED
APPROVED
DATE 11-1983

PLAN PREPARED BY
CONSULTING ENGINEERING ASSOCIATES INC.
ENGINEERING CONSULTANTS
16580 WYOMING DETROIT, MICH. 48221

DRWG. NO. 3 OF 17
FILE NO. CEA 1085

DRAWN BY
CHECKED BY
APPROVED BY

PUBLIC LIGHTING COMMISSION
CITY OF DETROIT

FILE NO. 48-0323
SHEET NO. 11 OF 25
DATE 11-1983

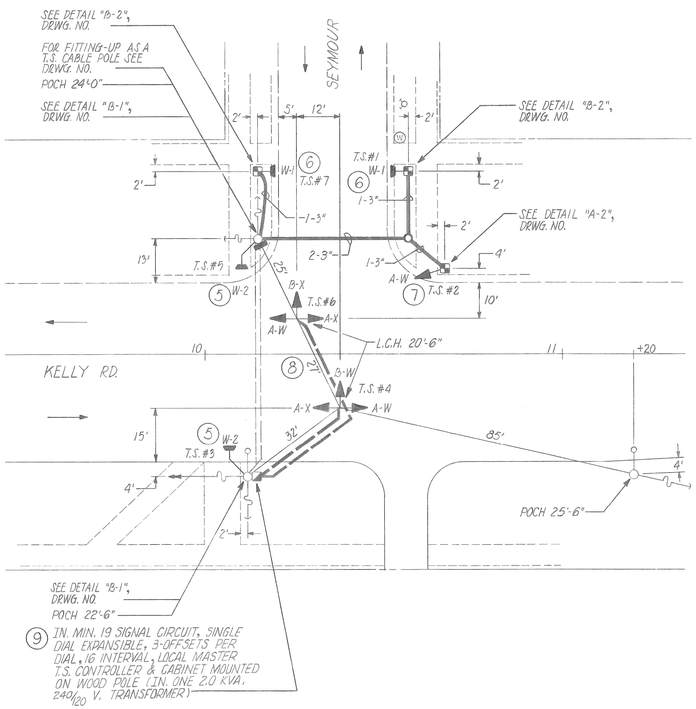


PLAN
SCALE: 1" = 20'

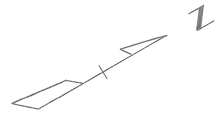


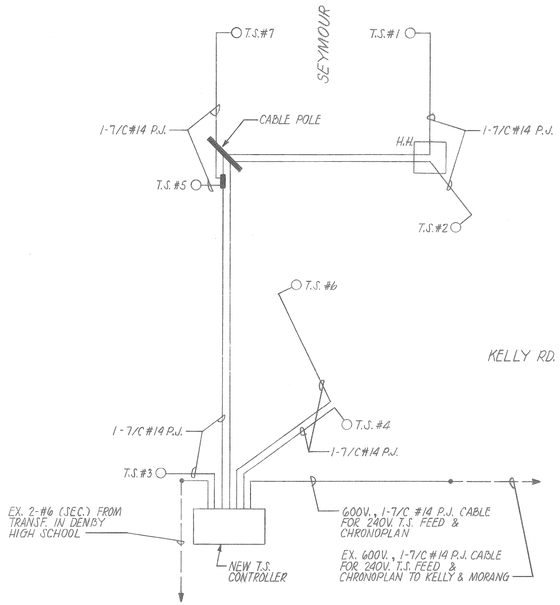


WIRING DIAGRAM

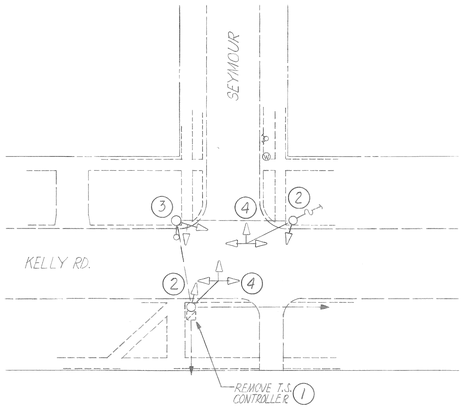


T.S. REMOVAL
SCALE: 1" = 40'

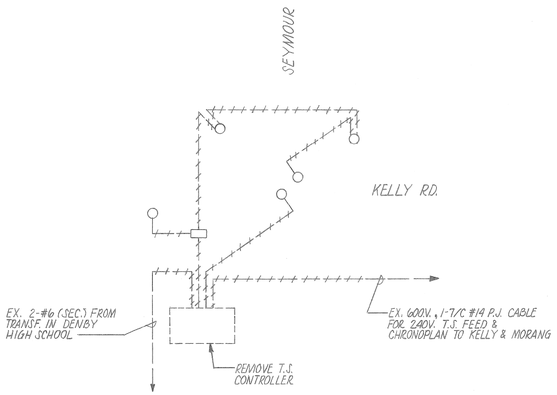


REMOVAL WIRING DIAGRAM

| LIST OF MATERIAL | | |
|---|---|---|
| NO | ITEM | QUANTITIES |
| 1 | REMOVE T.S. CONTROLLER & CABINET | 1 EACH |
| 2 | REMOVE 1-WAY BRACKET ARM T.S. | 2 EACH |
| 3 | REMOVE 2-WAY BRACKET ARM T.S. | 1 EACH |
| 4 | REMOVE 3-WAY MAST ARM T.S. & MAST ARM | 2 EACH |
| 5 | 1-WAY PEDESTRIAN BRACKET ARM T.S. | 2 EACH |
| 6 | 1-WAY PEDESTRIAN T.S. ON 8FT. PEDESTAL ON NEW FDN. | 2 EACH |
| 7 | 1-WAY T.S. ON 8FT. PEDESTAL ON NEW FDN. | 1 EACH |
| 8 | TWO 3-WAY SPAN WIRE T.S. ON NEW SPAN WIRE | 1 EACH |
| 9 | T.S. CONTROLLER & CABINET MOUNTED ON WOOD POLE | 1 EACH |
| | 1-3" ENCASED CONDUIT | 52 LIN. FT. |
| | ROUND HANDHOLE | 1 EACH |
| | 2-3" ENCASED CONDUIT | 40 LIN.FT. |

| REVISIONS | DATE | DESCRIPTION | CHKD. BY |
|---|---|---|---|
| | | | |

KELLY RD. WIDENING
GRAYTON TO NORTH OF SEYMOUR

SHEET ____ OF ____ SHEETS
JOB NO.
ASSIGNMENT NO.
DATE

CITY OF DETROIT
CITY ENGINEERING DEPARTMENT

DRAWN C.E.A.
CHECKED
APPROVED
DATE 11 - 1983

PLAN PREPARED BY
CONSULTING ENGINEERING ASSOCIATES INC.
ENGINEERING CONSULTANTS
16580 WYOMING DETROIT, MICH. 48221

DRWG. NO. 4 OF 17
FILE NO. CEA 1085

DRAWN BY
CHECKED BY
APPROVED BY

PUBLIC LIGHTING COMMISSION
CITY OF DETROIT

FILE NO. 48-0323
SHEET NO. 12 OF 25
DATE 11-1983

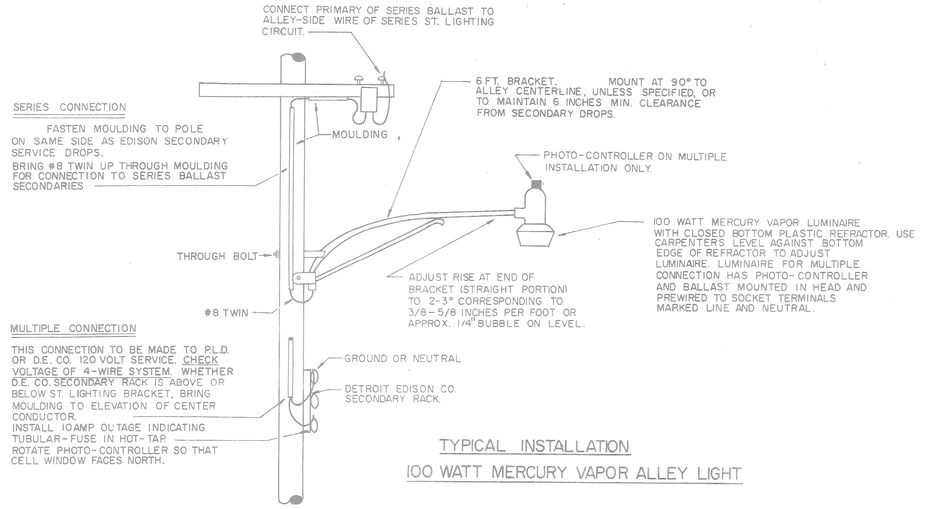


TYPICAL INSTALLATION
100 WATT MERCURY VAPOR ALLEY LIGHT

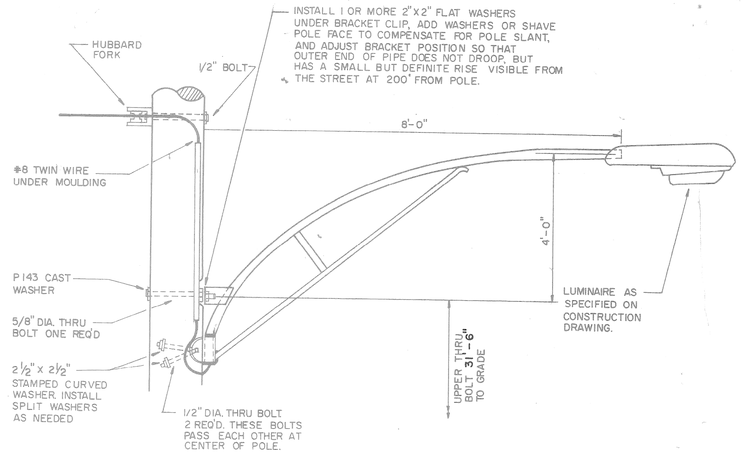


8' UPSWEEP STREET LIGHTING BRACKET ARM AND LUMINAIRE
FOR MAIN STREET LIGHTING

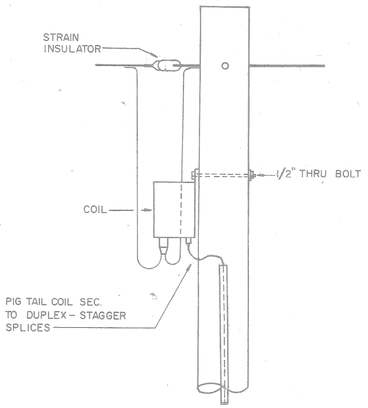


TYPICAL COIL INSTALLATION

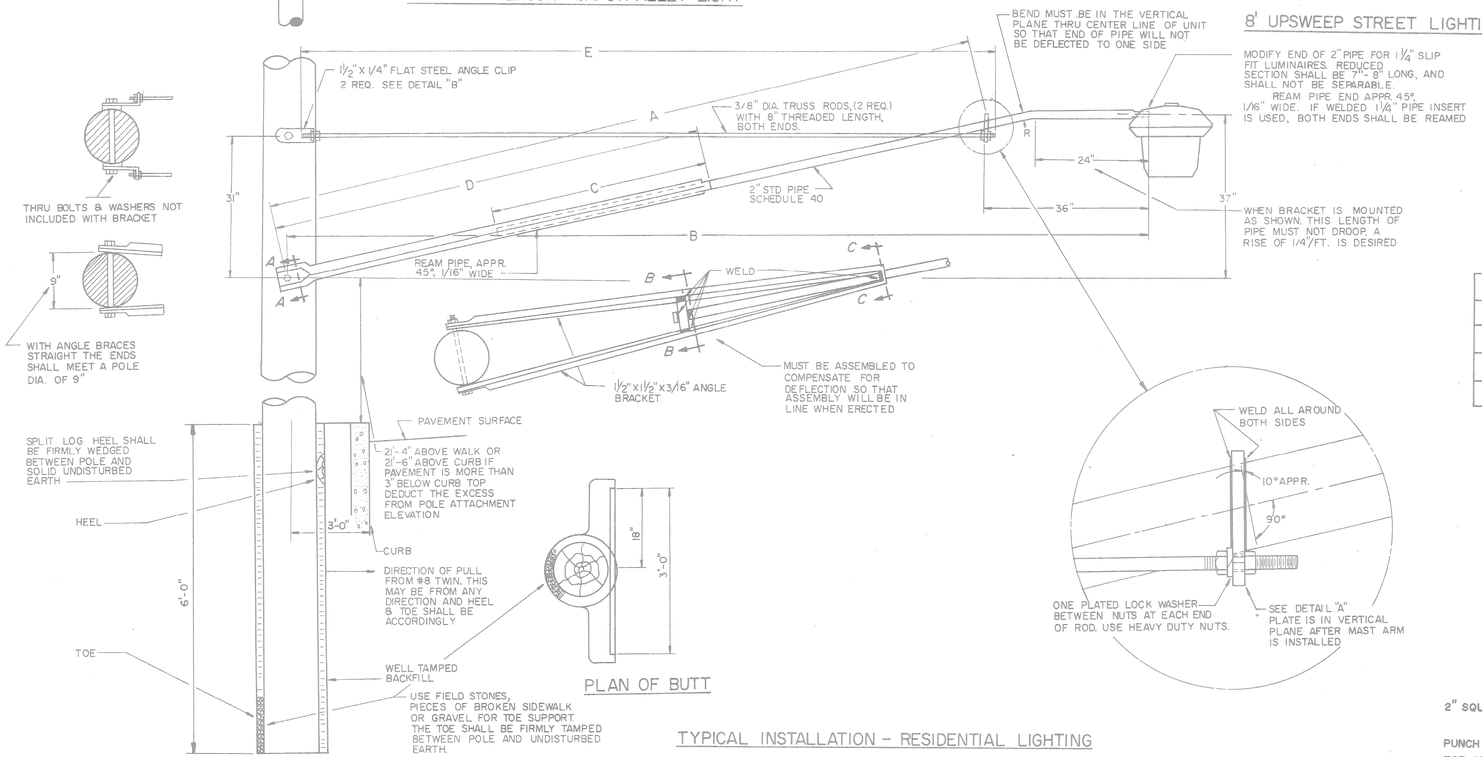


PLAN OF BUTT

TYPICAL INSTALLATION - RESIDENTIAL LIGHTING
BRACKET ARM AND LUMINAIRE

| DIMENSIONS | | | | ROD LENGTH |
|---|---|---|---|---|
| A | B | C | D | E |
| 13'-4" | 16'-0" | 4'8" | 9'6" | 13'-3" |
| 17'-3" | 20'-0" | 6'-0" | 10'-0" | 17'-3" |
| | | | | |

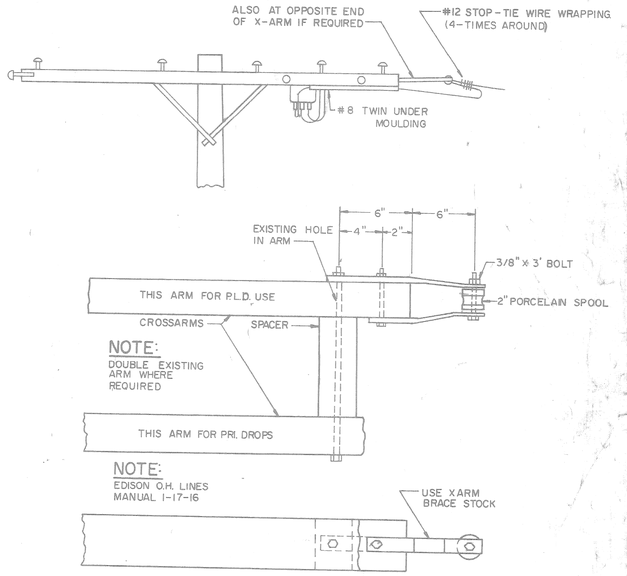


END OF ARM CONSTRUCTION FOR STREET LIGHTING
AT TRANSFORMER OR CABLE POLES

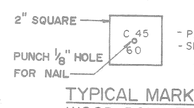


TYPICAL MARKING
WOOD POLE TAGS

USE 1/4" STEEL STAMP FOR LETTERING PIN SET MARKER 7'-0" ABOVE GRADE

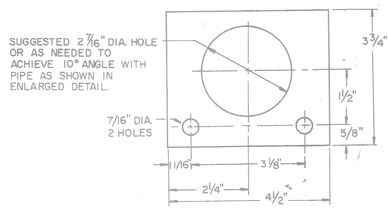


DETAIL "A"
STOCK 5/16" MILD STEEL

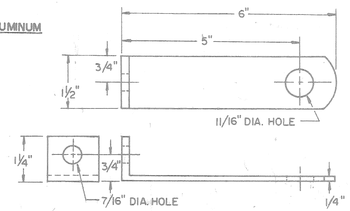


DETAIL "B"
2 REQ.

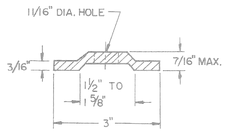


SECTION "A-A"

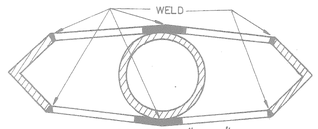


SECTION "B-B"

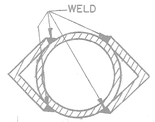


SECTION "C-C"

| DATE | DESCRIPTION | CHKD. BY |
|---|---|---|
| | | |

41

KELLY RD. WIDENING
GRAYTON TO NORTH OF SEYMOUR
MISCELLANEOUS OVERHEAD DETAILS
M2000(171)

SHEET ____ OF ____ SHEETS
JOB NO.
ASSIGNMENT NO.
DATE

CITY OF DETROIT
CITY ENGINEERING DEPARTMENT

DRAWN BY CEA
CHECKED BY
APPROVED BY
DATE 11-1983

PLAN PREPARED BY
CONSULTING ENGINEERING ASSOCIATES INC.
ENGINEERING CONSULTANTS
16580 WYOMING DETROIT, MICH. 48221

DRWG. NO. 5 OF 17
FILE NO. CEA 1085

CHECKED BY
APPROVED BY

PUBLIC LIGHTING COMMISSION
CITY OF DETROIT

FILE NO. 48-0323
SHEET NO. 13 OF 25
DATE 11-1983

301

T-

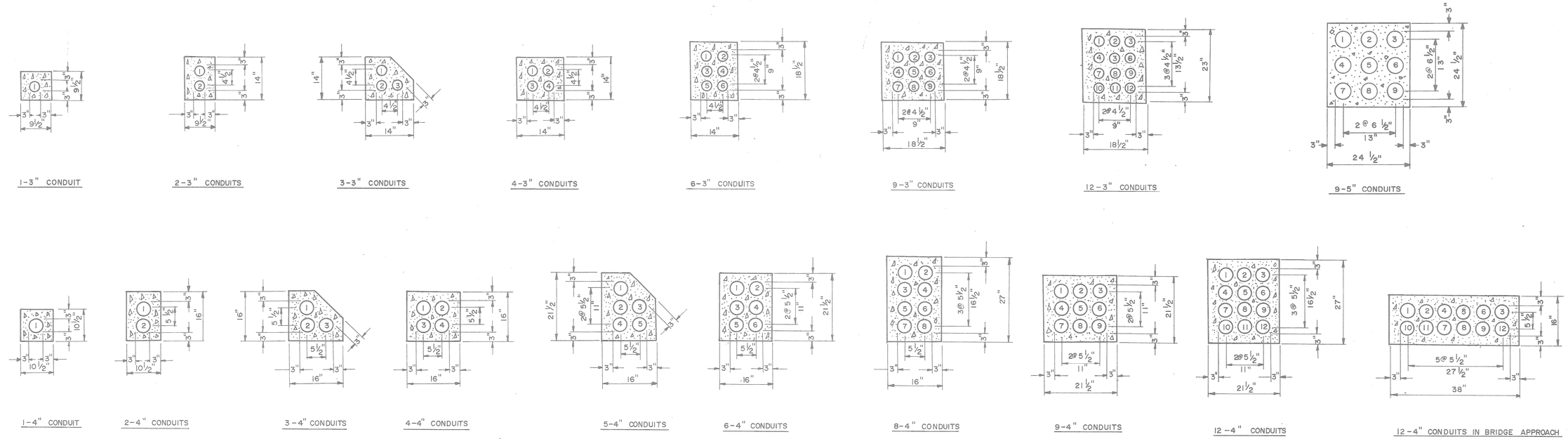


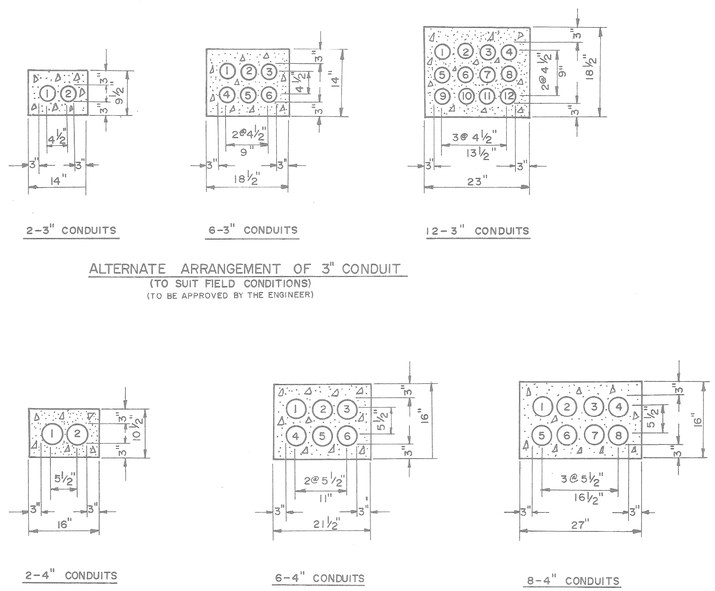


# CONCRETE ENCASED CONDUIT SECTIONS

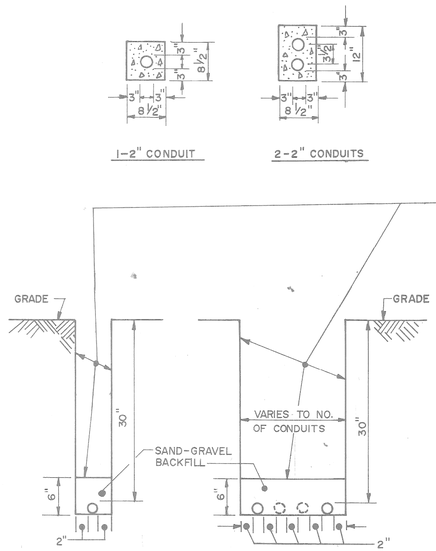


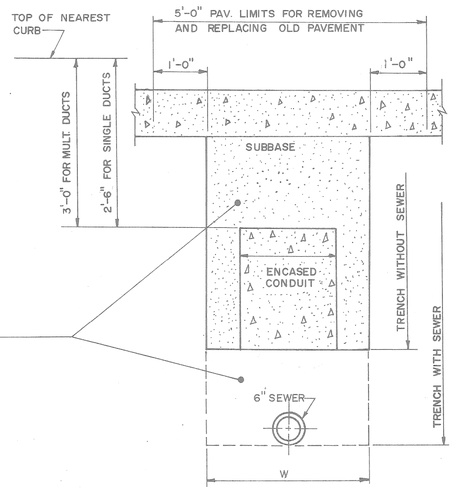


NOTE:
PREFERRED TRENCH WIDTH "W" NOT WIDER THAN CONDUIT ENCASEMENT WIDTH "D"

101

| DATE | DESCRIPTION | CHKD. BY |
|---|---|---|
| | | |

KELLY RD. WIDENING
GRAYTON TO NORTH OF SEYMOUR
MISC. ENCASED CONDUIT SECTIONS
DETAILS M2000(171)

SHEET ____ OF ____ SHEETS
JOB NO.
ASSIGNMENT NO.
DATE

CITY OF DETROIT
CITY ENGINEERING DEPARTMENT

DRAWN CEA
CHECKED
APPROVED
DATE 11-1983

PLAN PREPARED BY
CONSULTING ENGINEERING ASSOCIATES INC.
ENGINEERING CONSULTANTS
16580 WYOMING DETROIT, MICH., 48221

DRWG. NO. 6 OF 17
FILE NO. CEA 1085

DRAWN BY
CHECKED BY
APPROVED BY

PUBLIC LIGHTING COMMISSION
CITY OF DETROIT

FILE NO. 48-0323
SHEET NO. 14 OF 25
DATE 11-1983

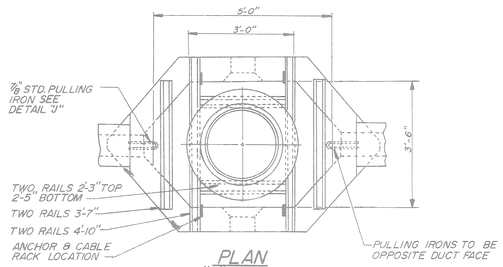


PLAN
TYPE "S" HANDHOLE
N.T.S.

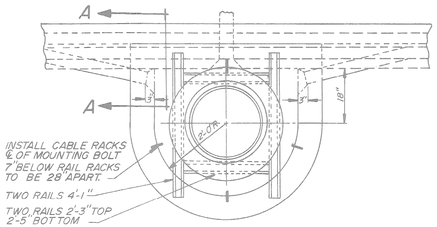


PLAN
TYPE "D" HANDHOLE
N.T.S.

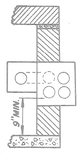


SECTION "A-A"

ELEVATION

ELEVATION

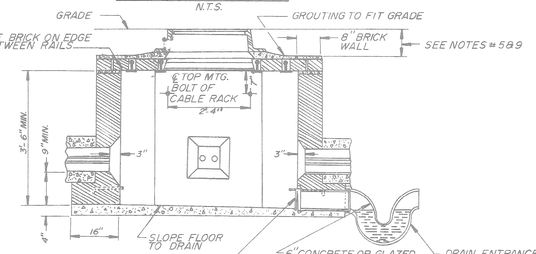


SECTION
TYPE "S" HANDHOLE
N.T.S.

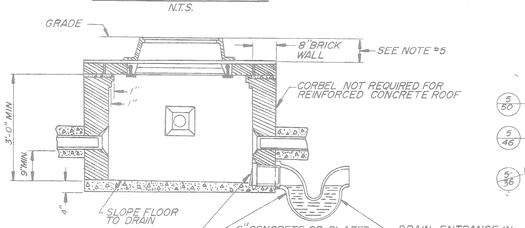


SECTION
TYPE "D" HANDHOLE
N.T.S.

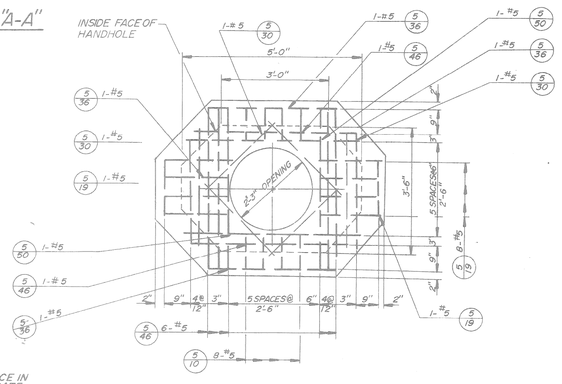


PLAN
ALTERNATE ROOF-TYPE "S" HANDHOLE
N.T.S.

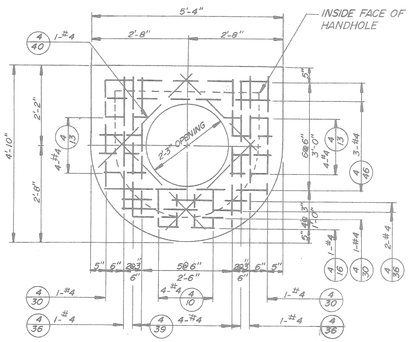


PLAN
ALTERNATE ROOF-TYPE "D" HANDHOLE
N.T.S.

| TYPE "D" HANDHOLE TABLE FOR #4 BARS | | |
|---|---|---|
| MARK | NO. | LENGTH |
| 4-46 | 3 | 4'-6 |
| 4-40 | 4 | 4'-0" |
| 4-39 | 4 | 3'-9" |
| 4-36 | 4 | 3'-6" |
| 4-30 | 3 | 3'-0" |
| 4-16 | 1 | 18" |
| 4-13 | 8 | 15" |
| 4-10 | 4 | 12" |

| TYPE "S" HANDHOLE TABLE FOR #5 BARS | | |
|---|---|---|
| MARK | NO. | LENGTH |
| 5-50 | 2 | 5'-0" |
| 5-46 | 8 | 4'-6" |
| 5-36 | 4 | 3'-6 |
| 5-30 | 6 | 3'-0" |
| 5-19 | 10 | 21" |
| 5-10 | 8 | 12" |

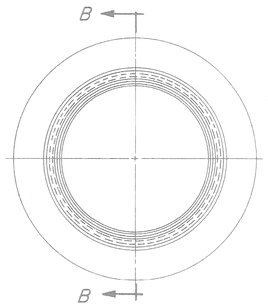


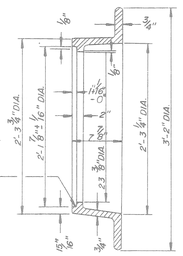


SECTION "B-B"

NOTE:
1. FRAMES MAY BE A.S.T.M. CLASS 30 GRAY IRON IF THE CONTRACTOR SO ELECTS.
2. ALL FILLETS ARE 1/2" RADIUS, & ALL ROUNDS ARE 1/4" RADIUS

P.L.C. PATTERN NO. 1A
A.S.T.M. CLASS 20 OR 30 GRAY IRON
APPROX. WT. 251 LBS.
HANDHOLE FRAME

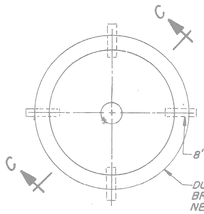


PLAN

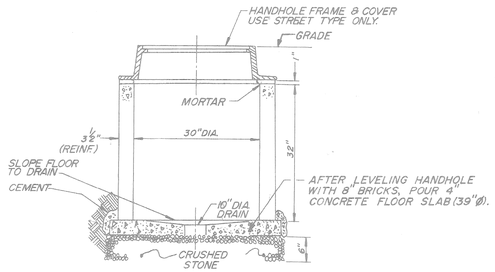


SECTION "C-C"
REINFORCED CONCRETE PIPE (CLASS III)
ROUND HANDHOLE

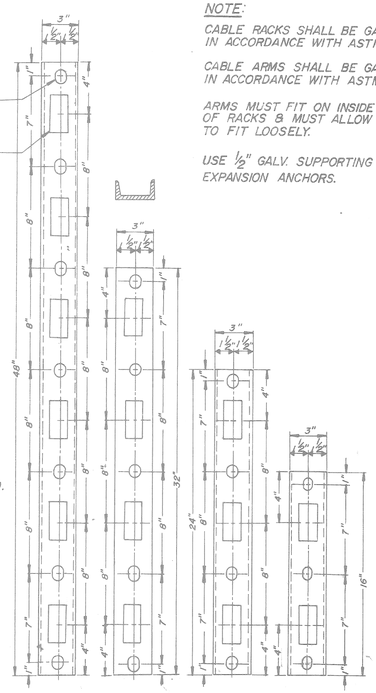


CABLE RACKS
3" STD. 4 lb CHANNEL
N.T.S.

NOTE:
CABLE RACKS SHALL BE GALV. AFTER FAB. IN ACCORDANCE WITH ASTM A-123.

CABLE ARMS SHALL BE GALV. AFTER FAB. IN ACCORDANCE WITH ASTM A-153 53.

ARMS MUST FIT ON INSIDE & OUTSIDE OF RACKS & MUST ALLOW INSULATOR TO FIT LOOSELY.

USE 1/2" GALV. SUPPORTING BOLTS AND EXPANSION ANCHORS.

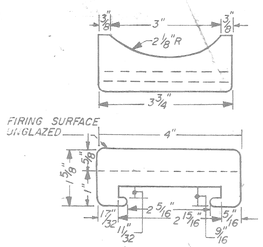


CABLE ARM INSULATORS
WHITE GLAZED PORCELAIN DRY PROCESS
N.T.S.

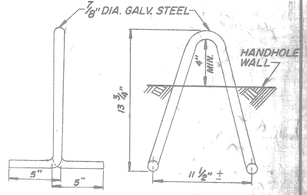


PULLING IRON
N.T.S.
DETAIL - "J"

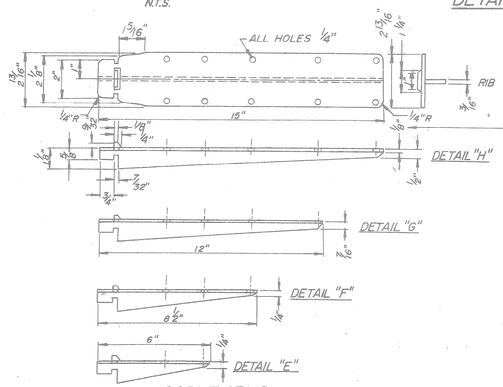


CABLE ARMS
MALLEABLE CAST IRON
N.T.S.

CABLE RACKS, CABLE ARMS, AND CABLE ARM INSULATORS
N.T.S.

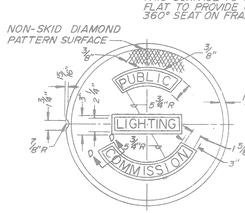


SECTION "D-D"

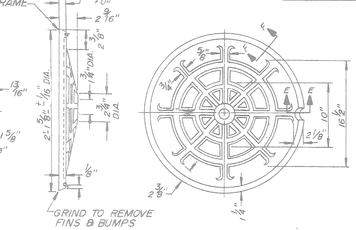


P.L.C. PATTERN NO. 2A
A.S.T.M. CLASS 30 GRAY IRON
APPROX. WT. 145 LBS.
STREET TYPE COVER
TO BE USED IN STREETS & DRIVES

SECTION "E-E"

SECTION "F-F"

NOTES:
1. DUCT ENTRANCE TO BE BUILT AS REQUIRED.
2. ALL RAILS TO BE 60#/YD. OR HEAVIER.
3. CABLE PULLING IRONS TO BE GALVANIZED.
4. CABLE RACKS AND ARMS TO BE GALVANIZED.
5. IN PAVEMENT PROVIDE AT LEAST 3" BETWEEN ROOF AND BASE OF PAVEMENT. WHERE EXISTING GRADE IS HIGHER THAN PROP. FUTURE GRADE INSTALL BRICK RING OR GROUT (AS REQ'D.) UNDER FRAME TO ALLOW FOR FUTURE FRAME ADJUSTMENT.
6. BAR NUMBERS DENOTE THE SIZE OF BAR REQUIRED IN ACCORDANCE WITH CURRENT USAGE SPECIFIED BY THE CONCRETE REINFORCING STEEL INSTITUTE.
7. EXCAVATION LIMITS FOR PUBLIC LIGHTING DEPARTMENT HANDHOLES SHALL BE ON VERTICAL PLANES OF THE FOOTING OUTLINE.
8. INSTALL ANCHORS & CABLE-RACKS AS SHOWN.
9. WHERE HANDHOLES ARE LOCATED BACK OF CURBS ROOF MUST BE BUILT 18" BELOW CURB GRADE, TO PROVIDE FOR FUTURE WIDENING.

| DATE | DESCRIPTION | CHKD. BY |
|---|---|---|
| | | |

14

KELLY RD. WIDENING
GRAYTON TO NORTH OF SEYMOUR
HANDHOLE DETAILS M2000(171)

SHEET ____ OF ____ SHEETS
JOB NO.
ASSIGNMENT NO.
DATE

CITY OF DETROIT
CITY ENGINEERING DEPARTMENT

DRAWN BY CEA
CHECKED BY
APPROVED BY
DATE 11-1983

PLAN PREPARED BY
CONSULTING ENGINEERING ASSOCIATES INC.
ENGINEERING CONSULTANTS
16590 WYOMING DETROIT, MICH. 48221
DRWG NO. 7 OF 17
FILE NO. CEA-PL1085

CHECKED BY
APPROVED BY

PUBLIC LIGHTING COMMISSION
CITY OF DETROIT

FILE NO. 48-0323
SHEET NO. 15 OF 25
DATE 11-1983

103

| USE | VOLT RATING | ITEM NO. | CONDUCTOR | SYNTHETIC RUBBER | IMPREG-NATED PAPER | POLYETH-YLENE | POLYVINYL-CHLORIDE | SHIELD OVER INSULATED CONDUCTOR | TAPE OVER INSULATED CONDUCTOR/S | IMPREG-NATED PAPER BELT | JACKET | LEAD SHEATH | COVERING OVER LEAD | STEEL TAPE ARMOR | COVERING OVER STEEL TAPE | COVERING OVER CONDUCTOR |
|---|---|---|---|---|---|---|---|---|---|---|---|---|---|---|---|---|
| OVERHEAD LINE WIRE | — | 1 | #2-#6 AWG. H.D. UNCOATED SOLID COPPER A.S.T.M. B1 | | | | | | | | | | | | | 0.047 INCH BLACK NEOPRENE |
| | — | 2 | #4/0-#2/0AWG. M.H.D., UNCOATED 7/STR. COPPER A.S.T.M. B2, B8 | | | | | | | | | | | | | 0.063 INCH BLACK NEOPRENE |
| | — | 3 | #6 AWG, HD., UNCOATED SOLID COPPER A.S.T.M. B1 | | | | | | | | | | | | | 0.032 INCH BLACK POLYETHYLENE |
| | — | 4 | #2 AWG, H.D. UNCOATED SOLID COPPER A.S.T.M. B1 | | | | | | | | | | | | | 0.047 INCH BLACK POLYETHYLENE |
| | — | 5 | #4/0-#2/0AWG, M.H.D., UNCOATED 7/STR, COPPER A.S.T.M. B2, B8 | | | | | | | | | | | | | 0.063 INCH BLACK POLYETHYLENE |
| SPECIAL EVENT FEEDER, | 2000 V. | 6 | | ALL MULTIPLE STREET LIGHTING, TRAFFIC SIGNAL SECONDARY AND SPECIAL EVENT CABLES INSTALLED IN CONDUIT SHALL BE AS PER THE FOLLOWING: CONDUCTORS: COATED, STRANDED COPPER CONDUCTOR PER ASTM B-8 AND B-189. INSULATION: MEETS OR EXCEEDS ALL REQUIREMENTS OF INTERIM STANDARD #1 TO IPCEA S-68-516 NEMA WC 8 (MARCH 1971) FOR ETHYLENE PROPYLENE RUBBER INSULATION AND ASTM D 2802-70 AND UL STANDARD 44. JACKET: EXCEEDS ALL REQUIREMENTS OF IPCEA S-19-81, (5TH EDITION) SECTION 4.13.8a FOR HEAVY DUTY CHLOROSULFONATED-POLYETHYLENE. LISTED BY UNDERWRITER'S LABORATORIES, INC. AS TYPE RHH OR RHW. NOTE: PRIOR TO PLACING ORDER FOR PURCHASE OF THIS CABLE, A SAMPLE LENGTH OF CABLE MUST FIRST BE SUBMITTED TO P.L.D. FOR THEIR APPROVAL OF INSULATION AND JACKET CHARACTERISTICS. | | | | | | | | | | | | | |
| MULT. ST. LTG. | 2000 V. | 7 | | | | | | | | | | | | | | |
| TRAFFIC SIG. SECONDARY | 2000 V. | 8 | | | | | | | | | | | | | | |
| RECEPTACLE, BRACKET & LAMP POST WIRE | 600 V. | 9 | #8 AWG, 1/C UNCOATED, SOFT 7/STR COPPER A.S.T.M. B8 | | | | 0.062 INCH 75°C, BLACK, OR WHITE AS REQ'D PIGMENTED NOT IMPRINTED | | | | | | | | | |
| 2/C AERIAL SERVICE | 600 V. | 10 | 2/C #8 AWG, UNCOATED, SOFT 7/STR. COPPER A.S.T.M. B8 | | | | 0.062 INCH 60°C, BLACK, FIGURE 8 CONSTRUCTION | | | | | | | | | |
| DISTRIBUTION CABLES | 5000 V. BELTED | 11 | 3/C 350MCM SECTOR, SOFT UNCOATED COPPER AEIC | | 0.085 INCH PER CONDUCTOR OIL VISCOSITY 1,000 SUS AT 100°C | | | | | 0.045 INCH OVERALL OIL VISCOSITY 1,000 SUS AT 100°C | | 0.095 INCH COPPER BEARING LEAD | 0.090 INCH. HEAT & LIGHT STABILIZED BLACK HIGH MOLECULAR WEIGHT POLYETHYLENE OVER LEAD SHEATH | | | |
| | 5000 V. BELTED | 12 | 3/C #2/0 AWG SECTOR SOFT UNCOATED COPPER AEIC | | 0.085 INCH PER CONDUCTOR OIL VISCOSITY 1,000 SUS AT 100°C | | | | | 0.045 INCH OVERALL OIL VISCOSITY 1,000 SUS AT 100°C | | 0.085 INCH COPPER BEARING LEAD | 0.080 INCH. HEAT & LIGHT STABILIZED BLACK HIGH MOLECULAR WEIGHT POLYETHYLENE OVER LEAD SHEATH | | | |
| | 5000 V. BELTED | 13 | 3/C #2 AWG, ROUND, SOFT UNCOATED COPPER AEIC | | 0.085 INCH PER CONDUCTOR OIL VISCOSITY 1,000 SUS AT 100°C | | | | | 0.045 INCH OVERALL OIL VISCOSITY 1,000 SUS AT 100°C | | 0.080 INCH COPPER BEARING LEAD | 0.080 INCH. HEAT & LIGHT STABILIZED BLACK HIGH MOLECULAR WEIGHT POLYETHYLENE OVER LEAD SHEATH | | | |
| | 7000 V. BELTED | 14 | 3/C 350MCM SECTOR, SOFT UNCOATED COPPER AEIC | | 0.100 INCH PER CONDUCTOR OIL VISCOSITY 1,000 SUS AT 100°C | | | | | 0.100 INCH OVERALL OIL VISCOSITY 1,000 SUS AT 100°C | | 0.095 INCH COPPER BEARING LEAD | 0.090 INCH. HEAT & LIGHT STABILIZED BLACK HIGH MOLECULAR WEIGHT POLYETHYLENE OVER LEAD SHEATH | | | |
| | 7000 V. BELTED | 15 | 3/C #2/0 AWG SECTOR, SOFT UNCOATED COPPER AEIC | | 0.100 INCH PER CONDUCTOR OIL VISCOSITY 1,000 SUS AT 100°C | | | | | 0.100 INCH OVERALL OIL VISCOSITY 1,000 SUS AT 100°C | | 0.085 INCH COPPER BEARING LEAD | 0.090 INCH. HEAT & LIGHT STABILIZED BLACK HIGH MOLECULAR WEIGHT POLYETHYLENE OVER LEAD SHEATH | | | |
| | 7000 V. BELTED | 16 | 3/C #2 AWG ROUND, SOFT UNCOATED COPPER AEIC | | 0.100 INCH PER CONDUCTOR OIL VISCOSITY 1,000 SUS AT 100°C | | | | | 0.100 INCH OVERALL OIL VISCOSITY 1,000 SUS AT 100°C | | 0.085 INCH COPPER BEARING LEAD | 0.080 INCH HEAT & LIGHT STABILIZED BLACK HIGH MOLECULAR WEIGHT POLYETHYLENE OVER LEAD SHEATH | | | |
| SERIES ST. LTG. CABLE, IN DUCT | 7500 V. | 17 | 1/C #8 AWG, SOLID, SOFT UNCOATED COPPER ASTM B3 | | | 0.188 INCH HIGH MOLECULAR NATURAL OVER CONDUCTOR | 0.047 INCH 60°C BLACK | | | | | 0.063 INCH COMMERCIALLY PURE | | | | |
| SERIES ST. LTG. CABLE DIRECT BURIAL | 7500 V. | 18 | 1/C #8 AWG, SOLID, SOFT UNCOATED COPPER ASTM B3 | | | 0.188 INCH HIGH MOLECULAR NATURAL OVER CONDUCTOR | 0.047 INCH 60°C, BLACK OVER INSULATED CONDUCTOR | | | | | 0.063 INCH COMMERCIALLY PURE | 0.047 INCH ASPHALTUM SATURATED JUTE OVER LEAD | TWO LAYERS 0.020 INCH GALV. STEEL TAPE | ASPHALTUM SATURATED JUTE OVER STEEL TAPE | |
| TRANSMISSION CABLES | 24000 V. SHIELDED | 19 | 3/C 500MCM SECTOR, SOFT, UNCOATED COPPER* AEIC | | 0.230 INCH PER CONDUCTOR OIL VISCOSITY 1,000 SUS AT 100°C | | | COPPER TAPE INTERCALATED WITH SEMI-CONDUCTING OR METALLIZED PAPER TAPE | ** | | | 0.110 INCH COPPER BEARING LEAD | 0.110 INCH HEAT LIGHT STABILIZED BLACK HIGH MOLECULAR WEIGHT POLYETHYLENE OVER LEAD SHEATH | | | |
| | 24000 V. SHIELDED | 20 | 3/C 350 MCM SECTOR SOFT, UNCOATED COPPER * AEIC | | 0.230 INCH PER CONDUCTOR OIL VISCOSITY 1,000 SUS AT 100°C | | | COPPER TAPE INTERCALATED WITH SEMI-CONDUCTING OR METALLIZED PAPER TAPE | ** | | | 0.105 INCH COPPER BEARING LEAD | 0.110 INCH HEAT LIGHT STABILIZED BLACK HIGH MOLECULAR WEIGHT POLYETHYLENE OVER LEAD SHEATH | | | |
| | 24000 V. SHIELDED | 21 | 3/C #2/0AWG, SECTOR, SOFT, UNCOATED COPPER * AEIC | | 0.245 INCH PER CONDUCTOR OIL VISCOSITY 1,000 SUS AT 100°C | | | COPPER TAPE INTERCALATED WITH SEMI-CONDUCTING OR METALLIZED PAPER TAPE | ** | | | 0.100 INCH COPPER BEARING LEAD | 0.090 INCH HEAT LIGHT STABILIZED BLACK HIGH MOLECULAR WEIGHT POLYETHYLENE OVER LEAD SHEATH | | | |
| MULTI-CONDUCTOR SIGNAL CABLE, IN DUCT | — | 22 | #14 AWG, SOLID, SOFT UNCOATED COPPER, NO. OF CONDUCTOR AS REQ'D. ASTM B3 | ACCORDING TO SPECIFICATIONS | | | | | | | | | | | | |
| MULTI-CONDUCTOR SIGNAL CABLE, AERIAL | — | 23 | #14 AWG, SOLID, SOFT, UNCOATED COPPER NO. OF CONDUCTORS AS REQ'D. ASTM B3 | | | | | | | | | | | | | |
| 8/C SERIES ST. LTG., IN DUCT | 7500 V. | 24 | 8/C #8 AWG, SOLID, SOFT, TINNED COPPER ASTM B 33 | SPECIAL CONSTRUCTION 0.063 INCH OF 30 % HEAVE RUBBER AND ONE LAYER OF LAPPED FILLED COTTON TAPE OVER EACH CONDUCTOR CENTRAL CONDUCTOR HAS ADDITIONAL 0.170 INCH VARNISHED CAMBRIC TAPE REMAINING 7 CONDUCTORS EACH HAVE ADDITIONAL 0.094 INCH VARNISHED CAMBRIC TAPE ONE OF 7 OUTSIDE CONDUCTORS WRAPPED WITH WHITE PAPER FOR IDENTIFICATION ALL CONDUCTORS CABLED WITH PARAFFINED JUTE (OUTSIDE FILLER). 0.094 INCH BELT OF OIL SATURATED PAPER OVERALL 0.115 INCH COPPER BEARING LEAD BENEATH OVERALL. | | | | | | | | | | | | |
| OVERHEAD FLEXIBLE TRAINER WIRE (UNSHIELDED) | — | 25 | 1/C #2 AWG, & LARGER, SOFT, CLASS G OR H STRANDING TINNED COPPER ASTM B173 | SEMI-CONDUCTING COTTON TAPE OVER CONDUCTOR & 0.268 OZONE RESISTING BUTYL | | | | | | | 0.063 INCH GENERAL PURPOSE OR HEAVY DUTY BLACK NEOPRENE | | | | | |

COLOR CODED AS FOLLOWS:

RED – A CIRCUIT
BLACK – B CIRCUIT
WHITE – NEUTRAL

* CARBON BLACK PAPER TAPE OVER CONDUCTOR

** BINDER TAPE OVER SHIELDED INSULATED CONDUCTORS AND FILLERS TO BE COPPER OR BRONZE TAPE INTERCALATED WITH PAPER TAPE OR (2) METALLIZED PAPER TAPES

| DATE | DESCRIPTION | CHKD BY |
|---|---|---|
| | | |

25

KELLY RD. WIDENING
GRAYTON TO NORTH OF SEYMOUR
CABLE & WIRE SPECIFICATIONS, DETAILS M2000(171)

SHEET ____ OF ____ SHEETS
JOB NO.
ASSIGNMENT NO.
DATE

CITY OF DETROIT
CITY ENGINEERING DEPARTMENT

DRAWN BY C.E.A.
CHECKED BY
APPROVED BY
DATE 11-1983

PLAN PREPARED BY
CONSULTING ENGINEERING ASSOCIATES INC.
ENGINEERING CONSULTANTS
16580 WYOMING DETROIT, MICH. 48221

DRWG. NO. 8 OF 17
FILE NO. CEA 1085

DRAWN BY
CHECKED BY
APPROVED BY

PUBLIC LIGHTING COMMISSION
CITY OF DETROIT

FILE NO. 48-0323
SHEET NO. 16 OF 25
DATE 11-1983

205

T-

EGE 17 0183 3 73 MC 365-

## 1. DISTRIBUTION AND TRANSMISSION CABLES

ALL TRANSMISSION CABLES, (24 K.V., ITEMS 11-16 INCLUSIVE) ARE FOR CIRCUITS WITH GROUNDED NEUTRAL, AND SHALL CONFORM STRICTLY WITH THE LATEST REVISION OF THE A.E.I.C. "SPECIFICATION FOR IMPREGNATED PAPER INSULATED, LEAD COVERED SOLID TYPE CABLE", 9TH EDITION, DATED APRIL, 1954, AND CONSTRUCTION OPTIONS AS NOTED IN SHEET 1.

ALL DISTRIBUTION CABLES, (7.85 KV, ITEMS 19-21 INCLUSIVE) ARE FOR CIRCUITS WITH UNGROUNDED NEUTRAL AND SHALL ALSO CONFORM WITH THE ABOVE SPECIFICATION, WITH CONSTRUCTION OPTIONS AS NOTED IN TABLE 1.

## 2. OVERHEAD LINE WIRE

OVERHEAD LINE WIRE SHALL BE IN ACCORDANCE WITH LATEST REVISION OF ASA C8.34 (NEOPRENE COVERING) OR THE LATEST REVISION OF ASA C8.35 (POLYETHYLENE COVERING).

## 3. 8/C, #8 AWG, STREET LIGHTING CABLE, 7500 V.

THIS IS A SPECIAL CONSTRUCTION AND SHALL BE MADE STRICTLY IN ACCORDANCE WITH THE DESCRIPTION IN TABLE 1.

## 4. OTHER RUBBER OR THERMOPLASTIC INSULATED CABLES, LEADED & NON-LEADED

WIRE SIZE, INSULATION TYPE AND NOMINAL THICKNESSES, OTHER CONSTRUCTION FEATURES SHALL BE AS SHOWN IN TABLE 1, AND APPLICABLE REFERENCE SPECIFICATIONS SHOWN BELOW:

## INSULATIONS

THE MINIMUM INSULATION THICKNESS OF ANY OF THESE CABLES SHALL BE LESS THAN 90% OF THE NOMINAL THICKNESS SHOWN ON TABLE 1.

THE PHYSICAL AND AGING PROPERTIES OF THERMOPLASTIC AND RUBBER INSULATIONS SHALL BE AS FOLLOWS:

| | POLYVINYL-CHLORIDE 60°C | POLYVINYL-CHLORIDE 75° | HIGH MOLECULAR WEIGHT NATURAL POLYETHYLENE | SYNTHETIC RUBBER 75°C HEAT & MOISTURE RESISTANT | OZONE RESISTING BUTYL RUBBER |
|---|---|---|---|---|---|
| ORIGINAL — TENSILE STRENGTH PSI | 2300, MIN. | 2300, MIN. | 1400, MIN. | 700, MIN. | 600, MIN. |
| ORIGINAL — ELONGATION AT RUPTURE, PERCENT | 250, MIN. | 250, MIN. | 350, MIN. | 300, MIN. AND 1/2" SET, MAX. | 350, MIN. AND 1/2" SET MAX. |
| AIR OVEN TEST, TIME & TEMP. AS NOTED — TENSILE STRENGTH % OF ORIGINAL | 65, MIN. 168 HRS., 100±1°C | 120, MAX. 80, MIN. 168 HRS., 120±1°C | 75, MIN. 48 HRS., 100±1°C | — | 60, MIN. 168 HRS., 100±1°C |
| AIR OVEN TEST, TIME & TEMP. AS NOTED — ELONGATION % OF ORIGINAL | * 65, MIN. 168 HRS., 100±1°C | ** 75, MIN. 168 HRS., 120±1°C | 75, MIN. 48 HRS., 100±1°C | — | 60, MIN. 168 HRS., 100±1°C |
| OXYGEN PRESSURE TEST — TENSILE STRENGTH % OF ORIGINAL | — | — | — | 50, MIN. 168 HRS., 80±1°C | — |
| OXYGEN PRESSURE TEST — ELONGATION % OF ORIGINAL | — | — | — | 50, MIN. 168 HRS., 80±1°C | — |
| AIR PRESSURE HEAT TEST — TENSILE STRENGTH % OF ORIGINAL | — | — | — | 50, MIN. 20 HRS., 127±1°C | 50, MIN. 40 HRS., 127±1°C |
| AIR PRESSURE HEAT TEST — ELONGATION % OF ORIGINAL | — | — | — | 50, MIN. 20 HRS., 127±1°C | 50, MIN. 40 HRS., 127±1°C |
| HEAT DISTORTION 121±1°C | % OF ORIGINAL 50, MAX. | 25, MAX. | — | — | — |
| OIL IMMERSION 4 HRS., 70±1°C — TENSILE STRENGTH % OF ORIGINAL | # 85, MIN. | ## 85, MIN. | — | — | — |
| OIL IMMERSION 4 HRS., 70±1°C — ELONGATION, % OF ORIGINAL | # 85, MIN. | ## 85, MIN. | — | — | — |
| HEAT SHOCK 121±1°C | — | NO CRACKS | NO CRACKS | — | — |
| COLD BEND | — | NO CRACKS -30±1°C | NO CRACKS -30±1°C | NO CRACKS -55±1°C | — |
| INSULATION RESISTANCE CONSTANT AT 15.6°C | — | 1,000 MIN. | 2,000 MIN. | 50,000 MIN. | 4,000 MIN. | 20,000 MIN. |
| FLAME RESISTING PROPERTIES | — | SECT. 6.5 IPCEA S-61-402 | SECT. 6.5 IPCEA S-61-402 | — | — | — |
| ACCELERATED WATER ABSORPTION REQUIREMENT — ELECTRICAL METHOD — DIELECTRIC CONSTANT, 1 DAY | 10, MAX. | 10, MAX. | — | 5, MAX. | — |
| ACCELERATED WATER ABSORPTION REQUIREMENT — ELECTRICAL METHOD — % CAPACITANCE INCREASE | 1-14 DAYS-10, MAX. 7-14 DAYS-5, MAX. | 1-14 DAYS-4.0 MAX. 7-14 DAYS-2.0 MAX. | — | 1-14 DAYS 10.0 MAX. 7-14 DAYS 4.0, MAX. | 1-14 DAYS 5.0, MAX. 7-14 DAYS 3.0, MAX. |
| ACCELERATED WATER ABSORPTION REQUIREMENT — ELECTRICAL METHOD — TEMP. | 50±1°C | 75±1°C | — | 75±1°C | 75±1°C |
| ACCELERATED WATER ABSORPTION REQUIREMENT — OR GRAVIMETRIC METHOD | 20 MILLIGRAMS PER SQ. INCH MAX. | 10 MILLIGRAM PER SQ. INCH MAX. | — | 20 MILLIGRAMS PER SQ. INCH, MAX. | 15 MILLIGRAMS PER SQ. INCH, MAX. |
| TEST IN ACCORANCE WITH LATEST REVISION OF | IPCEA S-61-402 (EXCEPTIONS ARE NOTED ABOVE) | | IPCEA S-61-402 | IPCEA S-19-81 (EXCEPTIONS ARE NOTED ABOVE) | IPCEA S-19-81 |

FOR #6 AWG AND LARGER, USING BUFFED DIE-CUT SPECIMENS, THE FOLLOWING VALUES SHALL APPLY:

* ELONGATION AFTER AIR OVEN TEST 45% MIN.

** ELONGATION AFTER AIR OVEN TEST 50% MIN.

# OR #* TENSILE STRENGTH AFTER OIL IMMERSION 80% MIN.

# OR #* ELONGATION AFTER OIL IMMERSION 60% MIN.

## CONDUCTORS

ALL CONDUCTORS SHALL BE COPPER, COMPLYING WITH THE LATEST REVISIONS OF ASTM SPECIFICATIONS, AS FOLLOWS:

| | |
|---|---|
| SOFT OR ANNEALED, BARE COPPER WIRE | ASTM B3 |
| MEDIUM HARD DRAWN COPPER WIRE | ASTM B2 |
| HARD DRAWN COPPER WIRE | ASTM B1 |
| CONCENTRIC-LAY-STRANDED COPPER CONDUCTORS, HARD, MEDIUM HARD OR SOFT, COATED OR UNCOATED, AS REQUIRED. | ASTM B8 |
| ROPE-LAY-STRANDED, SOFT, COPPER CONDUCTORS, COATED OR UNCOATED, AS REQUIRED | ASTM B173 |
| SOFT, SOLID COPPER CONDUCTORS, TINNED | ASTM B33 |
| SOFT, SOLID COPPER CONDUCTORS. LEAD OR LEAD ALLOY COATED | ASTM B189 |

## JACKETS

THE MINIMUM JACKET THICKNESS SHALL NOT BE LESS THAN 80% OF THE NOMINAL THICKNESS SHOWN ON TABLE 1.

| | NEOPRENE BLACK, HEAVY DUTY | NEOPRENE BLACK GENERAL PURPOSE | POLYVINL-CHLORIDE, BLACK | HEAT & LIGHT STABILIZED BLACK POLYETHYLENE COVER'G OVER LEAD SHEATH |
|---|---|---|---|---|
| ORIGINAL — TENSILE STRENGTH PSI | 1800, MIN. | 1500, MIN. | 1500, MIN. | 1400, MIN. |
| ORIGINAL — ELONGATION AT RUPTURE, % | 300, MIN. & 3/8" MAX. SET | 250, MIN. & 3/8" MAX. SET | 100, MIN. | 350, MIN. |
| AIR OVEN TEST TIME & TEMP. AS NOTED — TENSILE STRENGTH, % OF ORIGINAL | — | — | 85, MIN. 120 HRS., 100±1°C | 75, MIN. |
| AIR OVEN TEST TIME & TEMP. AS NOTED — ELONGATION % OF ORIGINAL | — | — | 60, MIN. 120 HRS., 100±1°C | 75, MIN. |
| OXYGEN PRESSURE TEST 168 HRS. 80±1°C — TENSILE STRENGTH % OF ORIGINAL | 50, MIN. | 50, MIN. | — | — |
| OXYGEN PRESSURE TEST 168 HRS. 80±1°C — ELONGATION % OF ORIGINAL | 50, MIN. | 50, MIN. | — | — |
| AIR PRESSURE HEAT TEST 20 HRS. 127±1°C — TENSILE STRENGTH, % OF ORIGINAL | 50, MIN. | 50, MIN. | — | — |
| AIR PRESSURE HEAT TEST 20 HRS. 127±1°C — ELONGATION, % OF ORIGINAL | 50, MIN. | 50, MIN. | — | — |
| OIL IMMERSION TEST, TIME & TEMP. AS NOTED — TENSILE STRENGTH, % OF ORIGINAL | 60, MIN. 18 HRS. 121±1°C | 60 MIN. 18 HRS. 121±1°C | 60 MIN. 4 HRS. 70±1°C | — |
| OIL IMMERSION TEST, TIME & TEMP. AS NOTED — ELONGATION % OF ORIGINAL | 60, MIN. 18 HRS. 121±1°C | 60 MIN 18 HRS. 121±1°C | 60 MIN. 4 HRS. 70±1°C | — |
| HEAT DISTORTION, PERCENT OF UNAGED VALUE | — | — | 50, MAX. 121°±1°C | 25, MAX. 90±1°C |
| HEAT SHOCK 121±1°C | — | — | NO CRACKS | — |
| COLD BEND. TEST -35±1°C | — | — | NO CRACKS | NO CRACKS |
| ENVIRONMENTAL CRACKING | — | — | — | NO CRACKS |
| LIGHT ABSORPTIVITY | — | — | — | 24,000, MIN. |
| TEST IN ACCORDANCE WITH LATEST REVISION OF | IPCEA S-19-81 | | IPCA S-61-402 | IPCEA INTERIM REVISION #1 PUB. S-54-401 SEPT. 1959 |

206

| DATE | DESCRIPTION | CHKD. BY |
|---|---|---|
| | | |

26

KELLY RD. WIDENING
GRAYTON TO NORTH OF SEYMOUR
CABLE & WIRE SPECIFICATIONS
DETAILS

M2000 (171)

SHEET ____ OF ____ SHEETS
JOB NO.
ASSIGNMENT NO.
DATE

CITY OF DETROIT
CITY ENGINEERING DEPARTMENT

DRAWN BY CEA
CHECKED BY
APPROVED BY
DATE 11-1983

PLAN PREPARED BY
CONSULTING ENGINEERING ASSOCIATES INC.
ENGINEERING CONSULTANTS
16580 WYOMING DETROIT, MICH 48221

DRAWING NO. 9 OF 17
FILE NO. CEA 1085

CHECKED BY
APPROVED BY

PUBLIC LIGHTING COMMISSION
CITY OF DETROIT

FILE NO. 48-0323
SHEET NO. 17 OF 25
DATE 11-1983

## CERTIFIED TEST REPORTS

SHIPMENTS OF WIRE AND CABLE SHALL NOT BE CONSIDERED COMPLETE UNTIL CERTIFIED TEST REPORTS ARE RECEIVED AND APPROVED. TEST REPORTS FOR THE VARIOUS ITEMS OF WIRE AND CABLE SHOWN ON SHEET 1 SHALL CONTAIN THE FOLLOWING TEST RESULTS:

ITEMS 1 - 5 INCLUSIVE – OVERHEAD LINE WIRE

1. CONDUCTOR CONTINUITY. RESISTANCE, TENSILE STRENGTH AND ELONGATION TESTS.
2. COVERING THICKNESS, PHYSICAL AND AGING TESTS.
3. WEIGHT OF FINISHED WIRE.

ALL TESTS IN ACCORDANCE WITH THE LATEST REVISION OF ASA 8.34 (NEOPRENE COVERING) OR ASA 8.35 (POLYETHYLENE COVERING.)

ITEMS 6 - 10 INCLUSIVE

1. CONDUCTOR CONTINUITY, RESISTANCE, TENSILE STRENGTH, AND ELONGATION TESTS IN ACCORDANCE WITH THE LATEST REVISIONS OF ASTM B8, B 33 OR B 189.
2. THE PHYSICAL AND OTHER TESTS FOR THE SPECIFIED INSULATION SHOWN ON SHEET-2.
3. INSULATION THICKNESS MEASUREMENTS.
4. THE ALTERNATING-CURRENT VOLTAGE TEST IN ACCORDANCE WITH THE LATEST REVISION OF IPCEA S-61-402.
5. INSULATION RESISTANCE TEST. INSULATION RESISTANCE CONSTANT AS SHOWN ON SHEET-2.
6. (CABLE ITEM 8 ONLY) MINIMUM, MAXIMUM AND AVERAGE LEAD THICKNESS MEASUREMENTS. SHALL ALSO BE INCLUDED.
7. (CABLE ITEM 10 ONLY) A RIP TEST SHALL ALSO BE INCLUDED AS FOLLOWS:

   A SIX-FOOT SAMPLE OF THE COMPLETED 2 CONDUCTOR WIRE WITH CLEANLY CUT ENDS SHALL BE SUBJECTED TO A TEMPERATURE OF -10°F. FOR ONE HOUR. WHILE STILL COLD, THE TWO INSULATED CONDUCTORS SHALL BE SEPARATED AT ONE END FOR A DISTANCE OF APPROXIMATELY 3 INCHES AND THEN SHALL BE TORN APART WITH A STEADY PULL AT A RATE OF 33 INCHES IN ONE SECOND OR LESS. THERE SHALL BE NO DAMAGE TO THE INSULATION.

ITEMS 11 - 16 INCLUSIVE - DISTRIBUTION CABLES UNDER 10 KV RATING

1. CONDUCTOR RESISTANCE.
2. SHEATH THICKNESS MEASUREMENTS.
3. HIGH VOLTAGE TEST.
4. MECHANICAL INTEGRITY TEST.
5. BENDING TEST.
6. SPARK TEST ON COVERING OVER LEAD SHEATH ON EACH LENGTH IF COVERING IS SPECIFIED.

ALL TESTS SHALL BE IN ACCORDANCE WITH THE LATEST REVISION OF "SOLID TYPE IMPREGNATED-PAPER-INSULATED LEAD COVERED CABLE SPECIFICATIONS", PUBLISHED BY THE ASSOCIATION OF EDISON ILLUMINATING COMPANIES.

ITEMS 17 - 18 INCLUSIVE - SERIES STREET LIGHTING CABLE

1. CONDUCTOR RESISTANCE AND CONTINUITY, IN ACCORDANCE WITH THE LATEST REVISION OF ASTM B-3.
2. THE PHYSICAL AND OTHER TESTS FOR HIGH MOLECULAR WEIGHT POLYETHYLENE INSULATION AS SHOWN ON SHEET-2.
3. THE PHYSICAL AND OTHER TESTS FOR 60°C. POLYVINYL-CHLORIDE INSULATION AS SHOWN ON SHEET-2.
4. THE FOLLOWING TESTS SHALL ALSO BE MADE AND REPORTED:

HIGH VOLTAGE TEST - AFTER NOT LESS THAN SIX (6) HOURS IMMERSION IN WATER AT 60°F, AND WHILE STILL IMMERSED, EACH REEL OF INSULATED CABLE WITHOUT LEAD, SHALL WITHSTAND A 60 CYCLE POTENTIAL OF 30,000 VOLTS FOR A PERIOD OF FIVE (5) MINUTES.

INSULATION RESISTANCE TEST – THE INSULATION RESISTANCE SHALL NOT BE LESS THAN 26,500 MEGOHMS PER THOUSAND FEET AT 60°F. THIS TEST SHALL BE CONDUCTED UPON COMPLETION OF THE HIGH VOLTAGE TEST.

SHORT-TIME DIELECTRIC STRENGTH TEST - A TEN (10) FT. SAMPLE OF THE FINISHED CABLE WITH ONLY THE LEAD-REMOVED, AFTER TWELVE (12) HOURS SUBMERSION IN WATER AND WHILE STILL IMMERSED, SHALL WITHSTAND A VOLTAGE TEST OF 60,000 VOLTS 60 CYCLE A.C. FOR FIVE (5) MINUTES. ON COMPLETION OF THIS TEST, THE VOLTAGE WILL BE GRADUALLY RAISED IN ACCORDANCE WITH I.P.C.E.A. SPECIFICATIONS, UNTIL THE INSULATION IS PUNCTURED. THIS VOLTAGE SHALL BE RECORDED AND SHALL BE NOT LESS THAN 72,000 VOLTS.

EXTERNAL CORONA TEST - THIS TEST SHALL BE CONDUCTED ON ONE (1) SAMPLE PER 10,000 Ft. OF COMPLETED CABLE EIGHTEEN (18) INCHES LONG WITH ONLY THE LEAD SHEATH REMOVED, AFTER WHICH IT SHALL BE WIPED WITH A CLEAN DRY CLOTH. THESE SAMPLES SHALL BE BENT AND MAINTAINED IN A "U-SHAPE" HAVING A BENDING DIAMETER EQUAL TO FIVE TIMES THE INSULATED CABLE DIAMETER. THE BENT SAMPLES SHALL THEN BE PLACED IN A VERTICAL POSITION ON A FLAT METALLIC GROUNDED PLATE AND 60 CYCLE AC. VOLTAGE SHALL BE GRADUALLY APPLIED WITH A CORONA-LEVEL TEST APPARATUS OF THE FILTER-CIRCUIT TYPE, MAINTAINING SUFFICIENT AMPLIFICATION TO INDICATE THE EXISTENCE OF CORONA DISCHARGE. THIS VOLTAGE SHALL BE RAISED UNTIL CORONA IS INDICATED, AND SHALL NOT BE LESS THAN 8,200 VOLTS RMS.

THE VOLTAGE SHALL THAN BE RAISED TO 25,000 VOLTS AND MAINTAINED FOR SIX (6) HOURS WITHOUT FAILURE OF THE INSULATION. THE VOLTAGE SHALL THEN BE RAISED IN 10% STEPS AT TEN (10) MINUTE INTERVALS UNTIL FAILURE OF THE INSULATION OR FLASHOVER OCCURS.

THESE VOLTAGES SHALL BE RECORDED AND REPORTED.

INTERNAL-CORONA LEVEL-EACH LENGTH OF COMPLETED CABLE SHALL BE TESTED IN ACCORDANCE WITH SECTION 6.13 OF THE LATEST REVISION OF I.P.C.E.A. STANDARD S-61-402, EXCEPT THAT THE MINIMUM CORONA LEVEL SHALL BE 8,200 VOLTS.

ITEMS 19 - 21 INCLUSIVE - TRANSMISSION CABLES.

1. CONDUCTOR RESISTANCE.
2. SHEATH THICKNESS MEASUREMENT.
3. HIGH VOLTAGE TEST.
4. MECHANICAL INTEGRITY TEST.
5. BENDING TEST.
6. IONIZATION TEST
7. HIGH VOLTAGE - TIME TEST
8. DIELECTRIC POWER TEST
9. POWER FACTOR TEST
10. SPARK TEST ON COVERING OVER LEAD SHEATH ON EACH LENGTH.

ONE TEST PER ORDER OR THERE IS A QUANTITY LIMITATION OF 25,000 FT. ON THESE TESTS PER AEIC

ALL TESTS SHALL BE IN ACCORDANCE WITH THE LATEST REVISION OF "SOLID-TYPE IMPREGNATED-PAPER-INSULATED LEAD-COVERED CABLE SPECIFICATION," PUBLISHED BY THE ASSOCIATION OF EDISON ILLUMINATING COMPANIES.

ITEMS 22 - 23 INCLUSIVE - MULTI-CONDUCTOR TRAFFIC SIGNAL CABLE

1. INDIVIDUAL CONDUCTOR RESISTANCE IN ACCORDANCE WITH THE LATEST REVISION OF ASTM B3.
2. INSULATION THICKNESS MEASUREMENTS.
3. INSULATION PHYSICAL AND OTHER TESTS FOR 60°C. POLYVINYLCHLORIDE AS SHOWN ON SHEET-2.
4. ALTERNATING CURRENT VOLTAGE TEST.
5. INSULATION RESISTANCE TEST. INSULATION RESISTANCE CONSTANT IS SHOWN ON SHEET-2.
6. (CABLE ITEM 23 ONLY)
   a. POLYVINYL CHLORIDE JACKET PHYSICAL AND OTHER TESTS SHOWN ON SHEET-2.
   b. JACKET THICKNESS MEASUREMENTS.
7. (CABLE ITEM 22 ONLY), LEAD SHEATH THICKNESS MEASUREMENTS.

TESTS NO. 4-7 INCLUSIVE, SHALL BE MADE IN ACCORDANCE WITH THE LATEST REVISION OF IPCEA S-61-402, EXCEPT THAT THE INSULATION RESISTANCE CONSTANT SHALL BE 1000 AT 15.6°C.

ITEM 24 - 8/C SERIES STREET LIGHTING CABLE

1. CONDUCTOR CONTINUITY AND RESISTANCE IN ACCORDANCE WITH THE LATEST REVISION OF ASTM B-33.
2. LEAD SHEATH THICKNESS MEASUREMENTS.
3. A HIGH VOLTAGE TEST CONSISTING OF 22,500 VOLTS, 60 CYCLES AC, FOR A DURATION OF 5 MINUTES, BETWEEN CONDUCTORS AND FROM EACH CONDUCTOR TO THE LEAD SHEATH.

ITEM 25 - FLEXIBLE OVERHEAD TRAINER WIRE

1. CONDUCTOR RESISTANCE, TENSILE STRENGTH AND ELONGATION IN ACCORDANCE WITH THE LATEST REVISION OF ASTM B-173.
2. INSULATION PHYSICAL AND OTHER TESTS SHOWN ON SHEET-2.
3. ADDITIONAL INSULATION TESTS IN ACCORDANCE WITH THE LATEST REVISION OF IPCEA S-19-81 AS FOLLOWS:
   a. ALTERNATING-CURRENT VOLTAGE TEST.
   b. INSULATION RESISTANCE TEST.
   c. DIRECT-CURRENT VOLTAGE TEST.
   d. CORONA LEVEL TEST.
   e. SHORT-TIME DIELECTRIC STRENGTH TEST.
   f. COLD-BENDING AND LONG-TIME DIELECTRIC STRENGTH TEST.
   g. CAPACITY AND POWER FACTOR TEST.
   h. OZONE RESISTANCE TEST.
4. PHYSICAL AND OTHER TESTS ON THE NEOPRENE JACKET (GENERAL PURPOSE OR HEAVY DUTY), AS SHOWN ON SHEET-2.
5. JACKET THICKNESS MEASUREMENTS.

ITEM 26 - SUPERVISORY CONTROL CABLE (MULTI-CONDUCTOR)

1. CONDUCTOR RESISTANCE, TENSILE STRENGTH AND ELONGATION, IN ACCORDANCE WITH THE LATEST REVISION OF ASTM B-3.
2. INSULATION PHYSICAL FOR 60°C. PVC INSULATION AND OTHER TESTS SHOWN ON SHEET 2.
3. INSULATION RESISTANCE TESTS.
4. VOLTAGE TESTS PER IPCEAS-61-402.
5. INSULATION THICKNESS.
6. LEAD SHEATH THICKNESS.
7. THICKNESS OF COVERING OVER LEAD SHEATH.
8. SPARK TEST ON COVER OVER LEAD SHEATH ON EACH LENGTH.

MULTI-PAIR COMMUNICATION CABLES (Maximum Mutual Capacitance = 90 nf per mile) (ALSO FOR TRAFFIC SIGNAL CHRONOPLAN.) AND SUPERVISORY

| ITEM NO. | USE AND RATING | CONDUCTOR | INSULATION (b) | TAPE OVER INSULATED CONDUCTORS | INNER BELT | SHIELD OVER TAPE OR BELT | JACKET OR SHEATH | COVERING OVER SHEATH |
|---|---|---|---|---|---|---|---|---|
| 27 | AERIAL (a) 600 V. | 16# OR #19 AWG, SOLID, UNCOATED COPPER (ASTM B 3), NUMBER OF PAIRS AS REQUIRED | 0.025-IN. (c) CLASS B POLYETHYLENE (ASTM D 1351) | 12.5 PERCENT MINIMUM LAP, POLYETHYLENE TEREPHTHALATE | | CORRUGATED, LONGITUDINAL, ANNEALED, 0.004-IN. (c) COPPER | BLACK POLYETHYLENE (AS TM D 2308). THICKNESSES OVER CORE AND MESSENGER AND WEB DIMENSIONS IN ACCORDANCE WITH REA SPECIFICATION PE-38. | |
| 28 | IN DUCT 600 V. | | | | BLACK POLY-ETHYLENE (ASTM D 2308) 0.010-IN. MIN. 0.030-IN. MAX. THICKNESS | | BLACK POLYETHYLENE (ASTM D 2308) THICKNESS IN ACCORDANCE WITH PARAGRAPH 3.6.7.3.7 AND TABLE IV OF FED. SPEC. J.C.111. | |
| 29 | IN DUCT 600V. | | 0.031 IN. (c) DIOCTYL PHTHALATE PLASTICIZED PVC (ASTM D 2219) | | | | LEAD-ANTIMONY THICKNESS PER ITEM 26 EXCEPT 0.063-IN. MIN. THICKNESS (c) | |
| 30 | DIRECT BURIAL 600 V. | #16 OR #19 AWG, SOLID, TINNED COPPER (ASTM B 33), NUMBER OF PAIRS AS REQUIRED | | | | | COMMERCIALLY PURE LEAD, THICKNESS PER ITEMS 22 & 23. | ASPHALTUM-SATURATED JUTE STEEL ARMOR PER ITEMS 17 & 18. |

## TEST REPORTS

SHIPMENTS OF WIRE AND CABLE SHALL NOT BE CONSIDERED COMPLETE UNTIL CERTIFIED TEST REPORTS ARE RECEIVED AND APPROVED. TEST REPORTS FOR THE VARIOUS ITEMS ABOVE SHALL SHOW COMPLIANCE WITH CITED SPECIFICATIONS, LISTING TEST RESULTS, AS WELL AS THE FOLLOWING TESTS:

1. CONDUCTOR RESISTANCE OF EACH LENGTH OF EACH CONDUCTOR IN OHMS PER 1000 Ft.

2. CERTIFICATION OF MUTUAL CAPACITANCE OF ALL CABLES AND OF NON-INJURIOUS EFFECT OF FLOODING COMPOUND ON ITEM 27.

(a) "FIGURE 8" CONSTRUCTION. MESSENGER SHALL BE 7 STRAND EHS GALVANIZED, CLASS A, 1/4-IN. NOMINAL DIAM. (ASTM A 475) AND SHALL BE FULL FLOODED.

(b) COLOR CODED PER FEDERAL SPECIFICATION J-C-111.

(c) NOMINAL THICKNESS, INCHES.



| DATE | DESCRIPTION | CHKD. BY |
|---|---|---|
| | | |

REVISIONS

KELLY RD. WIDENING
GRAYTON TO NORTH OF SEYMOUR
CABLE & WIRE SPECIFICATIONS
DETAILS . M2000(171)

SHEET ____ OF ____ SHEETS
JOB NO.
ASSIGNMENT NO.
DATE

CITY OF DETROIT
CITY ENGINEERING DEPARTMENT

DRAWN BY C.E.A.
CHECKED BY
APPROVED BY
DATE 11-1983

PLAN PREPARED BY
CONSULTING ENGINEERING ASSOCIATES INC.
ENGINEERING CONSULTANTS
16580 WYOMING DETROIT, MICH. 48221

DRAWING NO. 10 OF 17
FILE NO. CEA 1085

DRAWN BY
CHECKED BY
APPROVED BY

PUBLIC LIGHTING COMMISSION
CITY OF DETROIT

FILE NO. 48-0323
SHEET NO. 18 OF 25
DATE 11-1983

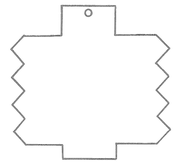

24,000 VOLT TRUNK LINE

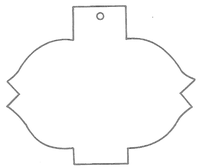

24,000 VOLT FEEDER

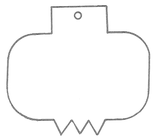

7200 VOLT FEEDER

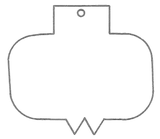

4800 VOLT & 5500 VOLT FEEDER

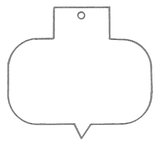

2400 VOLT FEEDER

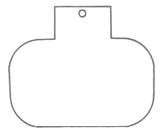

MISCELLANEOUS

IDENTIFICATION TAGS
*MATERIAL LEAD*
*SCALE 3/4" = 1"*

O. H. LINE PHASE TAG

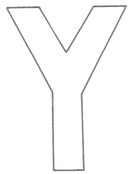

O. H. LINE PHASE TAG

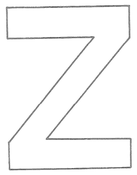

O. H. LINE PHASE TAG

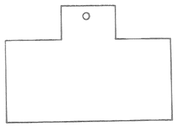

SUPERVISORY CONTROL

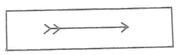

CIRCUIT DIRECTION

ST. LTG. COND. NO. (FROM 8/C CABLE)

ST. LTG. CIRC. NUMBER

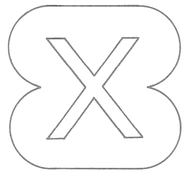

O. H. LINE OR POTHEAD PHASE TAG

O. H. LINE OR POTHEAD PHASE TAG

O. H. LINE OR POTHEAD PHASE TAG

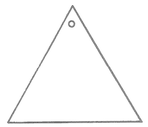

DEAD CABLE

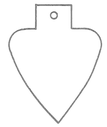

8 COND. CABLE

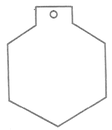

MULTIPLE LTG. CONTROL

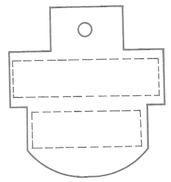

MULTIPLE STREET LIGHTING

MULTIPLE INC. LTG.

TRAFFIC SIGNALS

SECONDARY POWER SAFETY
ISLANDS & TRAFFIC SIGNALS

TRAFFIC SIGNAL CHRONOLIZER

## NOTE:

LEAD CABLE IDENTIFICATION TAGS WILL BE FURNISHED TO CONTRACTOR BY P.L.D. CABLE TAG MARKINGS SUCH AS SUBSTATION OR CABLE MARKINGS WILL BE AS SHOWN ON PLANS OR WILL BE FURNISHED BY P.L.D.

208

| DATE | DESCRIPTION | CHKD. BY |
|---|---|---|
| | | |

REVISIONS

*KELLY RD. WIDENING*
*GRAYTON TO NORTH OF SEYMOUR*
*CABLE TAGS DETAILS* *M 2000(171)*

SHEET ____ OF ____ SHEETS
JOB NO.
ASSIGNMENT NO.
DATE

CITY OF DETROIT
CITY ENGINEERING DEPARTMENT

DRAWN C.E.A.
CHECKED
APPROVED
DATE 11 - 1983

PLAN PREPARED BY
CONSULTING ENGINEERING ASSOCIATES INC.
ENGINEERING CONSULTANTS
16580 WYOMING DETROIT, MICH., 48221

DRWG. NO. 11 OF 17
FILE NO. CEA 1085

DRAWN BY
CHECKED BY
APPROVED

PUBLIC LIGHTING DEPARTMENT
CITY OF DETROIT

FILE NO. 48-0323
SHEET NO. 19 OF 25
DATE 11 - 1983

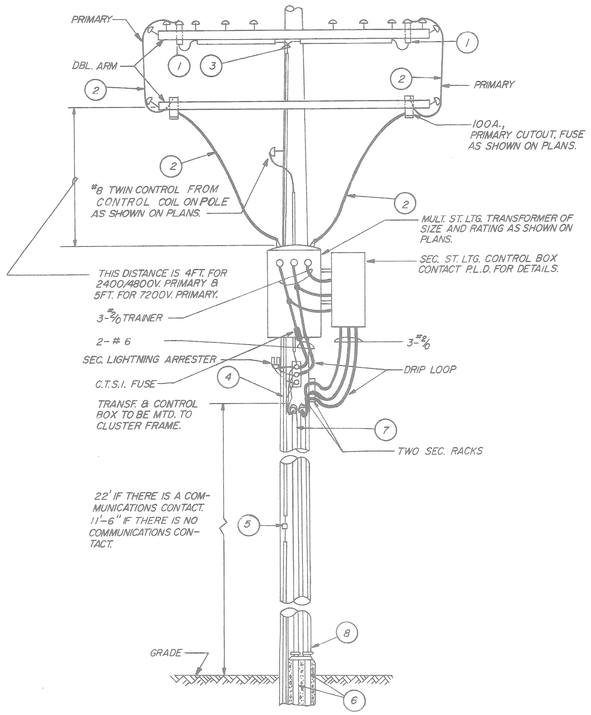


COMB TRANSF. POLE & ST. LTG. & SEC. CABLE POLE
DETAIL "A"
N.T.S.

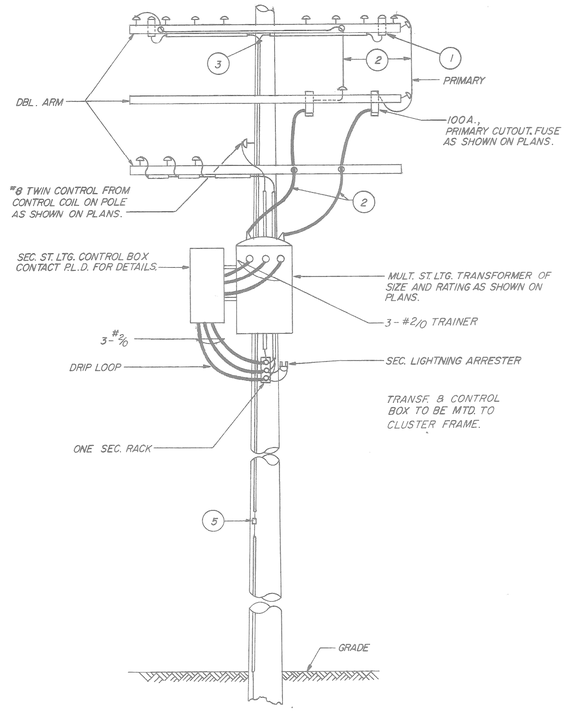


MULT. ST. LTG. TRANSFORMER POLE
DETAIL "B"
N.T.S.

NOTE:
FOR ALL CABLE POLES INSTALL 2-5/8"x 8'-0 GROUND RODS AS SHOWN-ON GROUND ROD INSTALLATION AND CONNECT GROUND RODS WITH #2 COPPER WIRE TO IRON PIPE RISER WITH SUITABLE GROUND CLAMP.

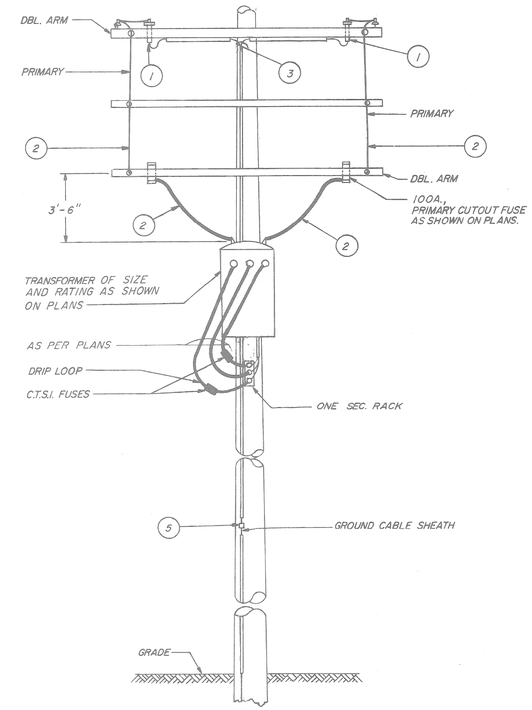


TRANSFORMER POLE DETAIL
DETAIL "C"
N.T.S.

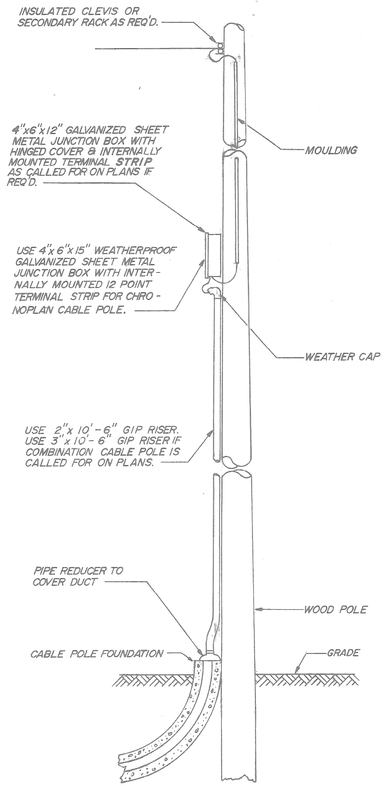


TYPICAL CHRONOPLAN, SECONDARY, MULT. ST. LTG. & TRAFFIC SIGNAL CABLE DETAIL
DETAIL "D"
N.T.S.

| DETAIL ITEMS | |
|---|---|
| 1 | LIGHTNING ARRESTER-SIZE AND TYPE AS REQUIRED |
| 2 | #6 OVERHEAD TRAINING WIRE, (NEOPRENE COVERED, WEATHERPROOF) |
| 3 | #2 GROUND WIRE UNDER MOULDING |
| 4 | WEATHERHEAD |
| 5 | FOUR SCREW CONNECTOR |
| 6 | 36" RADIUS PLASTIC BEND, NO. & SIZE OF CONDUIT AS SHOWN ON PLANS. |
| 7 | 3" G.I.P. RISER |
| 8 | 3"x 4" REDUCER ADAPTER |

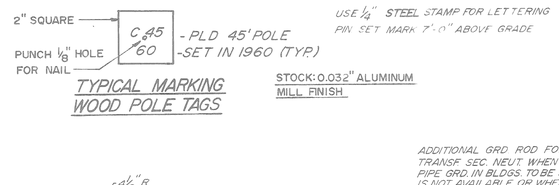


TYPICAL MARKING WOOD POLE TAGS

STOCK: 0.032" ALUMINUM MILL FINISH

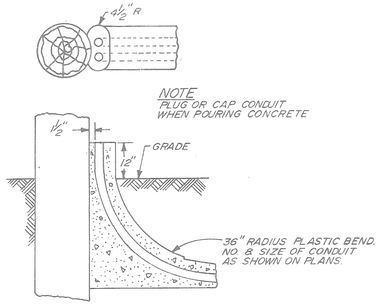


INSTALLATION OF CONDUIT AT CABLE POLE

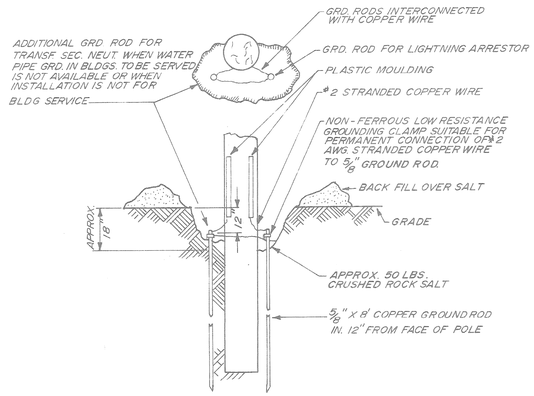


GROUND ROD INSTALLATION

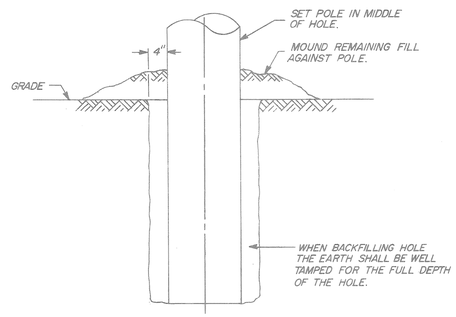


WOOD POLE INSTALLATION
N.T.S.

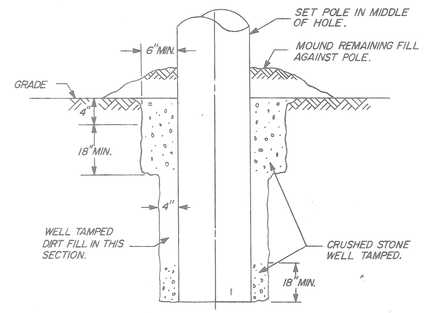


M.S.S.
SELF-SUPPORTING WOOD POLE IN CRUSHED STONE
N.T.S.

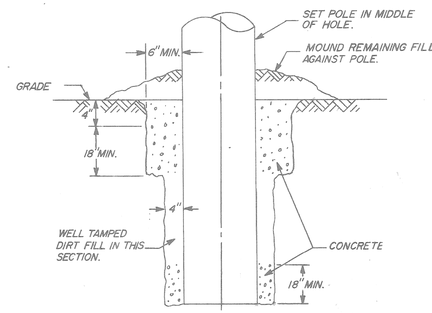


WOOD POLE IN CONCRETE
N.T.S.

302

| DATE | DESCRIPTION | CHKD. BY |
|---|---|---|
| | | |

REVISIONS

KELLY RD. WIDENING
GRAYTON TO NORTH OF SEYMOUR
240/480V.
TRANSFORMER POLES & MISC. CABLE POLE DETAILS

M2000(171)

SHEET ____ OF ____ SHEETS
JOB NO.
ASSIGNMENT NO.
DATE

CITY OF DETROIT
CITY ENGINEERING DEPARTMENT

DRAWN C.E.A.
CHECKED
APPROVED
DATE 11-1983

PLAN PREPARED BY
CONSULTING ENGINEERING ASSOCIATES INC.
ENGINEERING CONSULTANTS
16580 WYOMING DETROIT, MICH. 48221

DRWG NO. 12 OF 17
FILE NO. CEA 1085

CHECKED BY
APPROVED BY

PUBLIC LIGHTING COMMISSION
CITY OF DETROIT

FILE NO. 48-0323
SHEET NO. 20 OF 25
DATE 11-1983

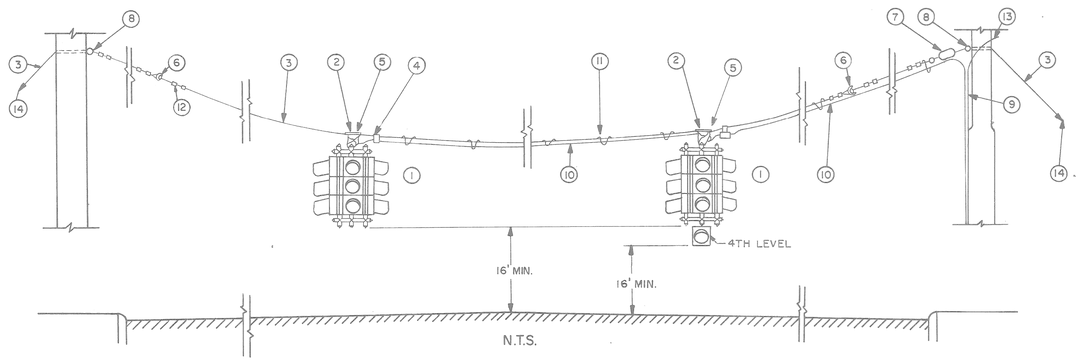


N.T.S.

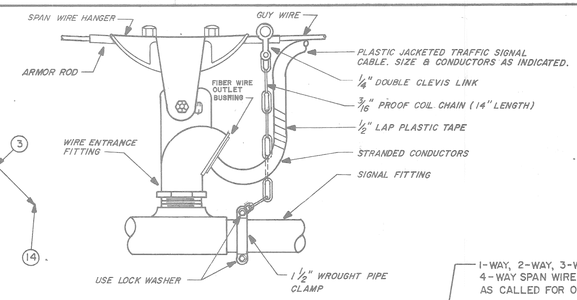


SPAN WIRE FITTING & WEATHER CAP

N.T.S.

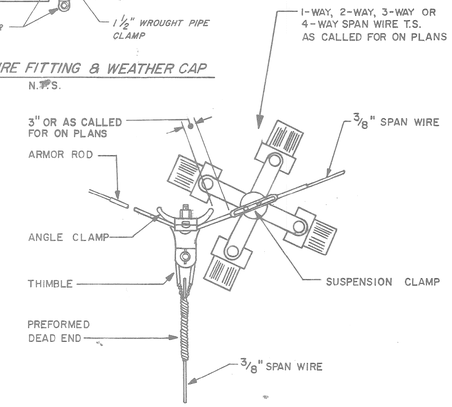


PULL-OFF CONNECTION FOR 3-WAY SUSPENSION

N.T.S.

MATERIALS FOR JUNCTION BOX

- (A) BOX – #14 B&S ALUMINUM
- (B) LID – #14 B&S ALUMINUM
- (C) PIANO HINGE
- (D) TERMINAL MOUNTING STRAPS – #10 B&S ALUMINUM
- (E) MOUNTING LUGS – #8 B&S ALUMINUM
- (F) 1/4" BOLT & NUT
- (G) 1/8" SHEET METAL SCREW

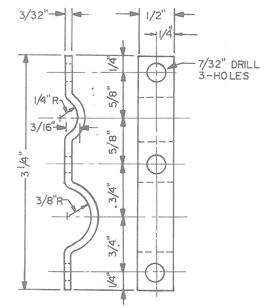


DETAIL "B"
T.S. CABLE HANGER
MATERIAL – FLAT STEEL
ONE COAT RED LEAD
N.T.S.

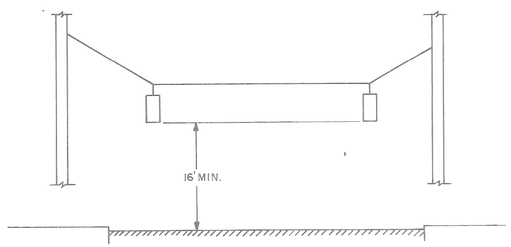


N.T.S.

| NO. | ITEM |
|---|---|
| 1 | TRAFFIC SIGNAL AS REQUIRED ON GENERAL PLAN |
| 2 | SPAN WIRE HANGER |
| 3 | 3/8" GUY WIRE (USE SIEMENS-MARTIN AS PER SPEC.) |
| 4 | CABLE HANGER DETAIL "B" |
| 5 | ARMOR ROD |
| 6 | STRAIN INSULATOR |
| 7 | 3/4" X 18" TURNBUCKLE |
| 8 | 3/4" EYEBOLT |
| 9 | SPLIT PLASTIC CONDUIT |
| 10 | #14 T.S. CABLE (AS SPECIFIED) |
| 11 | PREFORMED STEEL LASHING RODS OR CABLE HANGERS |
| 12 | WIRE ROPE CLIPS OR PREFORMED DEAD ENDS |
| 13 | 2/C-#8 CABLE FOR SERVICE (WHEN REQ'D) |
| 14 | 3/8" GUY, GUARD AND ANCHOR |
| | |

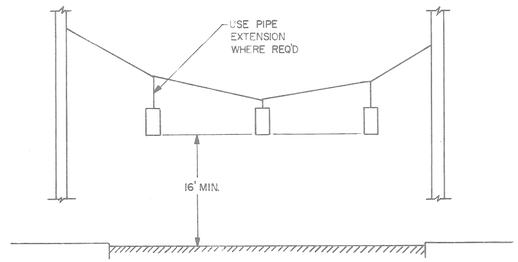


N.T.S.

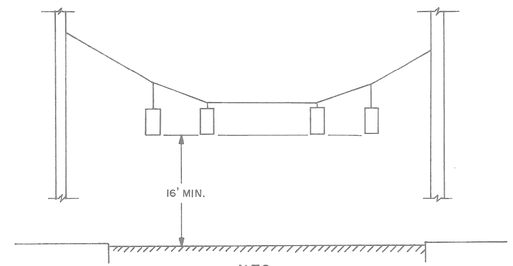


N.T.S.

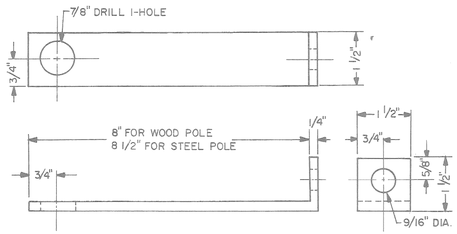


DETAIL "C"
CONTROLLER BRACKET MATERIAL FLAT STEEL
ONE COAT RED LEAD
N.T.S.

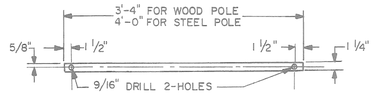


DETAIL "D"
CONTROLLER STRAP
MATERIAL 1/4" FLAT STEEL
ONE COAT RED LEAD
N.T.S.

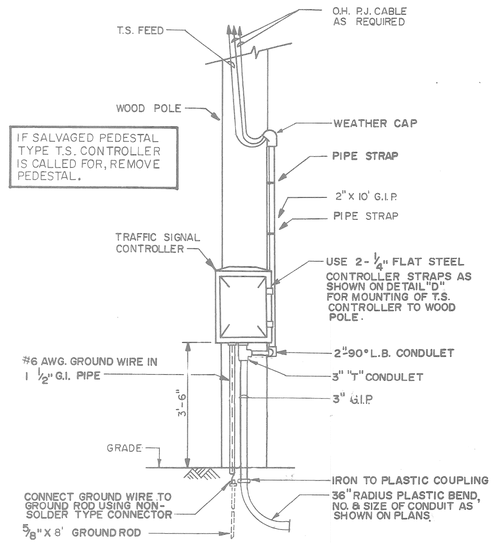


IF SALVAGED PEDESTAL TYPE T.S. CONTROLLER IS CALLED FOR, REMOVE PEDESTAL.

INSTALLATION OF TRAFFIC SIGNAL CONTROLLER ON WOOD POLE

N.T.S.

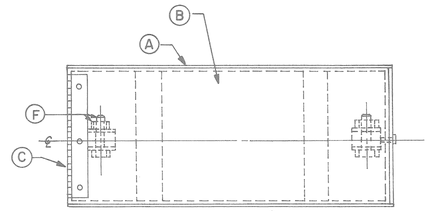


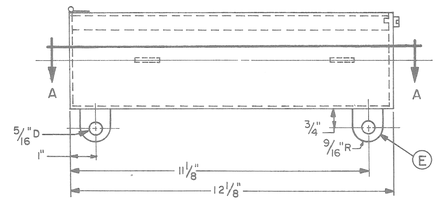


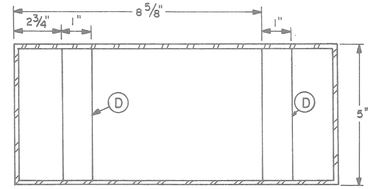


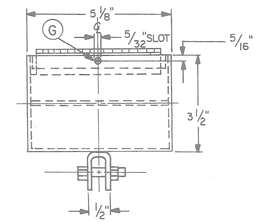


NOTE: BOX TO BE OF WEATHER TIGHT CONSTRUCTION

ALUMINUM JUNCTION BOX FOR SPANWIRE MOUNTING

N.T.S.

506

| DATE | DESCRIPTION | CHKD. BY |
|---|---|---|
| | | |

55

KELLY RD. WIDENING
GRAYTON TO NORTH OF SEYMOUR
WOOD POLE T.S. SPAN WIRE INSTALLATION DETAILS
M2000(171)

SHEET ____ OF ____ SHEETS
JOB NO.
ASSIGNMENT NO.
DATE

CITY OF DETROIT
CITY ENGINEERING DEPARTMENT

DRAWN BY CEA
CHECKED BY
APPROVED BY
DATE 11-1983

PLAN PREPARED BY
CONSULTING ENGINEERING ASSOCIATES INC.
ENGINEERING CONSULTANTS
16580 WYOMING DETROIT, MICH. 48221

DRWG NO. 13 OF 17
FILE NO. CEA 1085

CHECKED BY
APPROVED BY

PUBLIC LIGHTING COMMISSION
CITY OF DETROIT

FILE NO. 48-0323
SHEET NO. 21 OF 25
DATE 11-1983

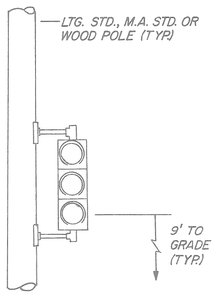


DETAIL "A-1"

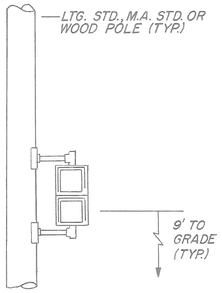


DETAIL "B-1"

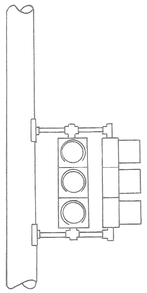

DETAIL "C-1"

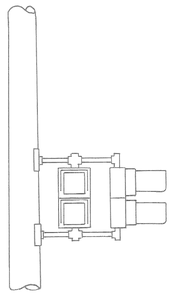

DETAIL "D-1"

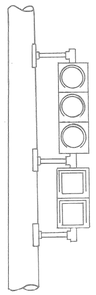

DETAIL "E-1"

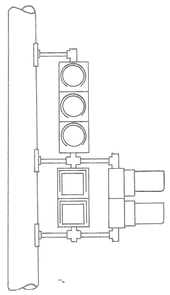

DETAIL "F-1"

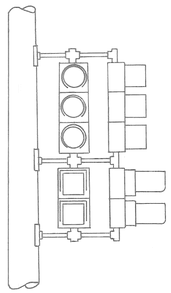

DETAIL "G-1"

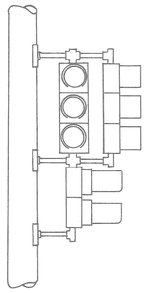

DETAIL "H-1"

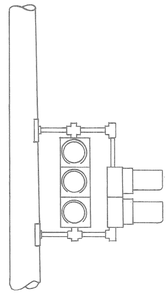

DETAIL "J-1"

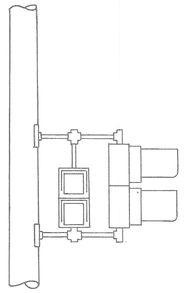

DETAIL "K-1"

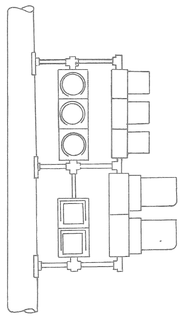

DETAIL "L-1"

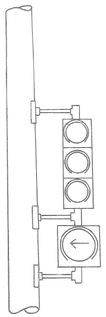

DETAIL "M-1"

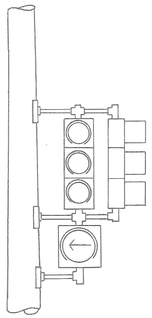

DETAIL "N-1"

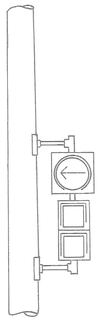

DETAIL "P-1"

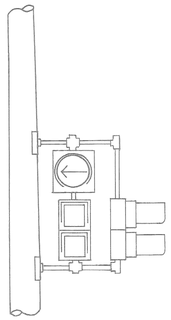

DETAIL "Q-1"

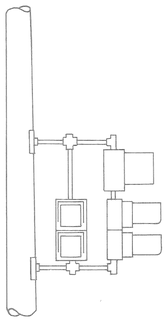

DETAIL "R-1"

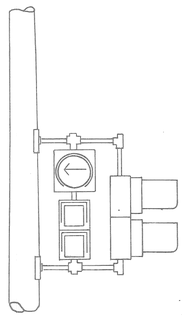

DETAIL "S-1"

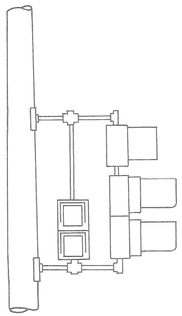

DETAIL "T-1"

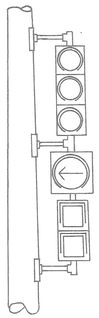

DETAIL "U-1"

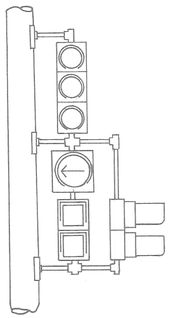

DETAIL "V-1"

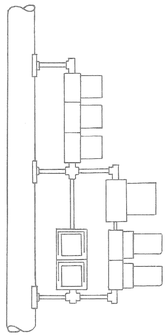

DETAIL "W-1"

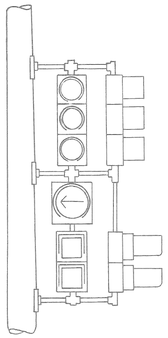

DETAIL "X-1"

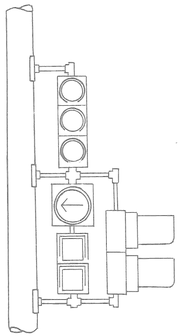

DETAIL "Y-1"

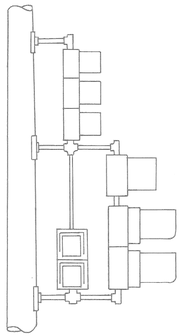

DETAIL "Z-1"

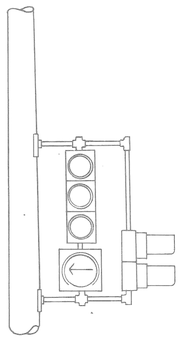

DETAIL "A-A-1"

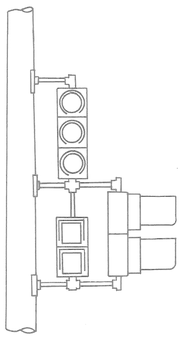

DETAIL "B-B-1"

**NOTE:**

THE RELATIVE POSITION OF 2-WAY T.S. & PEDESTRIAN BRACKET ARM SIGNALS WITHIN THE BRACKET ASSEMBLY SHALL BE REVERSED (I.E. THE SIGNAL NEAREST THE POLE GOES TO THE OUTSIDE OF THE BRACKET ASSEMBLY & THE OUTSIDE SIGNAL GOES INBOARD OR NEAREST TO POLE) ACCORDING TO THE PLAN VIEW TO PROVIDE CLEAR VEHICULAR AND PEDESTRIAN VIEWING.

**NOTE:**

PIPE ASSEMBLY SHALL BE OF SUCH LENGTH AND HEIGHT AS TO ACCOMMODATE TRAFFIC SIGNALS AND PEDESTRIAN SIGNALS FOR PROPER MAINTENANCE AND CLEAR VEHICULAR AND PEDESTRIAN VIEWING.



| DATE | DESCRIPTION | CHKD. BY |
|---|---|---|
| | | |

REVISIONS

58

KELLY RD. WIDENING
GRAYTON TO NORTH OF SEYMOUR
M 2000 (171)
T.S. BRACKET ARM ASSEMBLY DETAILS

SHEET ____ OF ____ SHEETS
JOB NO.
ASSIGNMENT NO.
DATE

CITY OF DETROIT
CITY ENGINEERING DEPARTMENT

DRAWN C.E.A.
CHECKED
APPROVED
DATE 11 - 1983

PLAN PREPARED BY:
CONSULTING ENGINEERING ASSOCIATES INC.
ENGINEERING CONSULTANTS
16580 WYOMING DETROIT, MICH., 48221

DRWG. NO. 14 OF 17
FILE NO. CEA 1085

CHECKED BY
APPROVED BY

PUBLIC LIGHTING COMMISSION
CITY OF DETROIT

FILE NO. 48-0323
SHEET NO. 22 OF 25
DATE 11 - 1983

DETAIL "A-2"

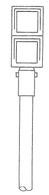

DETAIL "B-2"

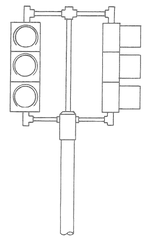

DETAIL "C-2"

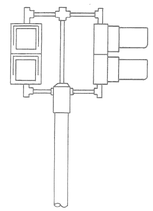

DETAIL "D-2"

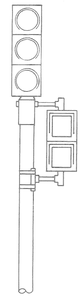

DETAIL "E-2"

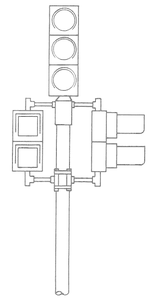

DETAIL "F-2"

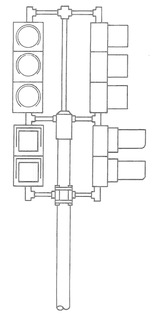

DETAIL "G-2"

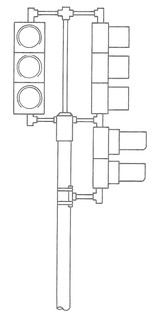

DETAIL "H-2"

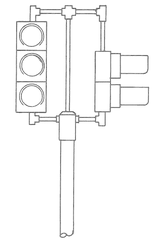

DETAIL "J-2"

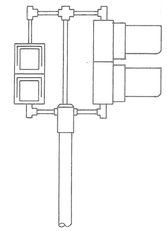

DETAIL "K-2"

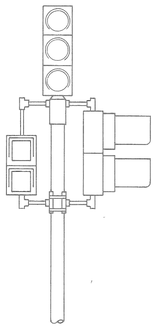

DETAIL "L-2"

DETAIL "M-2"

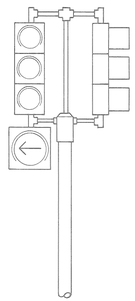

DETAIL "N-2"

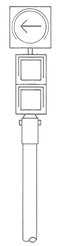

DETAIL "P-2"

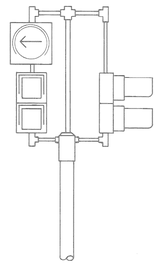

DETAIL "Q-2"

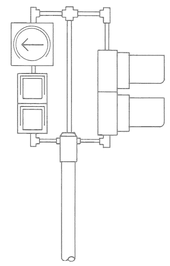

DETAIL "R-2"

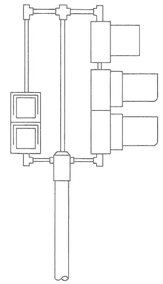

DETAIL "S-2"

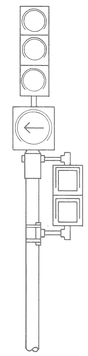

DETAIL "T-2"

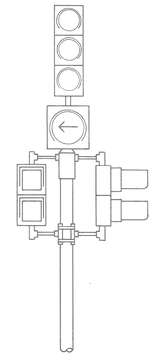

DETAIL "U-2"

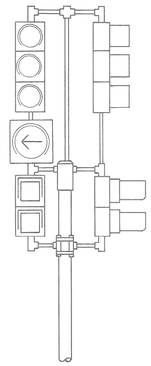

DETAIL "V-2"

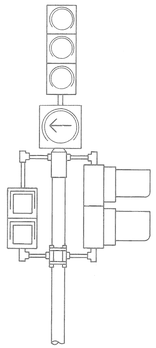

DETAIL "W-2"

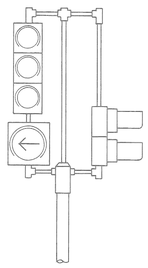

DETAIL "X-2"

NOTE:

PIPE ASSEMBLY SHALL BE OF SUCH LENGTH AND HEIGHT AS TO ACCOMMODATE TRAFFIC SIGNALS AND PEDESTRIAN SIGNALS FOR PROPER MAINTENANCE AND CLEAR VEHICULAR AND PEDESTRIAN VIEWING.



| DATE | DESCRIPTION | CHKD BY |
|---|---|---|
| | | |

REVISIONS

59

KELLY RD. WIDENING
GRAYTON TO NORTH OF SEYMOUR
T.S. PEDESTAL ASSEMBLY DETAILS

M2000(171)

SHEET ____ OF ____ SHEETS
JOB NO.
ASSIGNMENT NO.
DATE

CITY OF DETROIT
CITY ENGINEERING DEPARTMENT

DRAWN BY C.E.A.
CHECKED BY
APPROVED BY
DATE 11-1983

PLAN PREPARED BY
CONSULTING ENGINEERING ASSOCIATES INC.
ENGINEERING CONSULTANTS
16580 WYOMING DETROIT, MICH. 48221

DRAWING NO. 15 OF 17
FILE NO. CEA 1085

CHECKED BY
APPROVED BY

PUBLIC LIGHTING COMMISSION
CITY OF DETROIT

FILE NO. 48-0323
SHEET NO. 23 OF 25
DATE 11-1983

T-

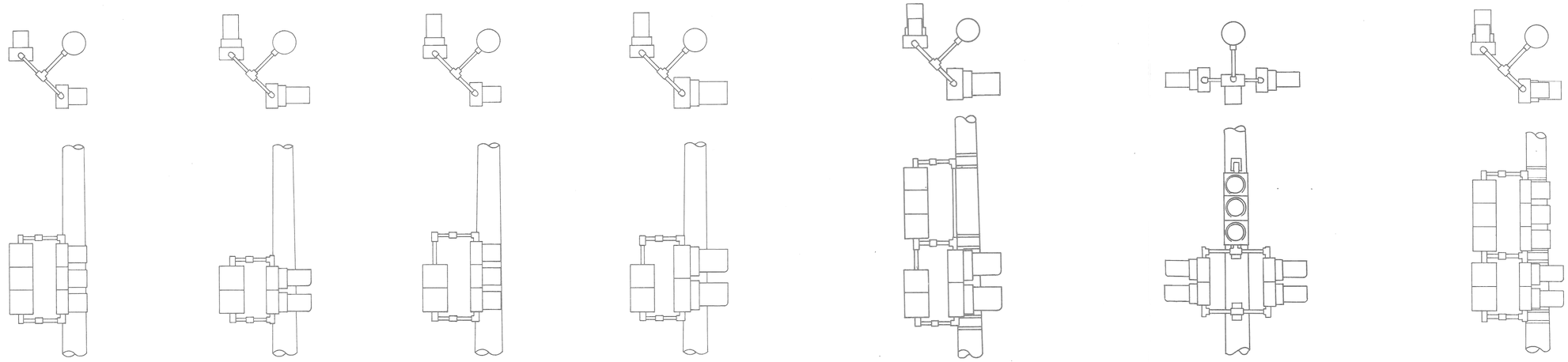

DETAIL "A-3" DETAIL "B-3" DETAIL "C-3" DETAIL "D-3" DETAIL "E-3" DETAIL "F-3" DETAIL "G-3"

NOTE:

PIPE ASSEMBLY SHALL BE OF SUCH LENGTH AND HEIGHT AS TO ACCOMMODATE TRAFFIC SIGNALS AND PEDESTRIAN SIGNALS FOR PROPER MAINTENANCE AND CLEAR VEHICULAR AND PEDESTRIAN VIEWING.

510

| DATE | DESCRIPTION | CHKD. BY |
|---|---|---|
| | | |

60

KELLY RD. WIDENING
GRAYTON TO NORTH OF SEYMOUR

T.S. BRACKET ARM ASSEMBLY DETAILS

M2000(171)

SHEET ____ OF ____ SHEETS
JOB NO.
ASSIGNMENT NO.
DATE

CITY OF DETROIT

CITY ENGINEERING DEPARTMENT

DRAWN C.E.A.
CHECKED
APPROVED
DATE 11 - 1983

PLAN PREPARED BY
CONSULTING ENGINEERING ASSOCIATES INC.
ENGINEERING CONSULTANTS
16580 WYOMING DETROIT, MICH., 48221

DRWG. NO. 16 OF 17
FILE NO. CEA 1085

CHECKED BY
APPROVED BY

PUBLIC LIGHTING COMMISSION
CITY OF DETROIT

FILE NO. 48-0323
SHEET NO. 24 OF 25
DATE 11-1983

| BID-ITEM | UNIT | AS PER PLANS DRWG. NO. 3 | 4 | TOTAL | AS CONSTRUCTED DRWG. NO. 3 | 4 | TOTAL |
|---|---|---|---|---|---|---|---|
| 1-3" ENCASED CONDUIT | LIN. FT. | -- | 52 | 52 | | | |
| 2-3" ENCASED CONDUIT | LIN. FT. | -- | 40 | 40 | | | |
| ROUND HANDHOLE | EACH | -- | 1 | 1 | | | |
| REMOVE WOOD POLE | EACH | 14 | -- | 14 | | | |
| REMOVE O.H. ST. LTG. UNIT | EACH | 10 | -- | 10 | | | |
| REMOVE #8 TWIN | LIN. FT. | 150 | -- | 150 | | | |
| REMOVE 11 PR. (COMM.) | LIN. FT. | 840 | -- | 840 | | | |
| REMOVE 600V., 1-7/C #14 P.J. CABLE FOR CHRONOPLAN | LIN. FT. | 320 | -- | 320 | | | |
| REMOVE 2-#6 O.H. LINE | LIN. FT. | 1155 | -- | 1155 | | | |
| 40 FT., CLASS 4 WOOD POLE | EACH | 10 | -- | 10 | | | |
| 40 FT., CLASS 2 WOOD POLE | EACH | 1 | -- | 1 | | | |
| 45 FT., CLASS 2 WOOD POLE | EACH | 2 | -- | 2 | | | |
| 400 W. MERCURY VAPOR O.H. ST. LTG. UNIT WITH SERIES COIL | EACH | 12 | -- | 12 | | | |
| 11 PR. (COMM.) | LIN. FT. | 850 | -- | 850 | | | |
| 600V., 1-7/C #14 P.J. CABLE FOR CHRONOPLAN | LIN. FT. | 330 | -- | 330 | | | |
| 2-#6 O.H. LINE | LIN. FT. | 1165 | -- | 1165 | | | |
| FIT-UP WOOD POLE AS A T.S. CABLE POLE | EACH | 1 | -- | 1 | | | |
| REMOVE T.S. CONTROLLER & CABINET | EACH | -- | 1 | 1 | | | |
| REMOVE 1-WAY BRACKET ARM T.S. | EACH | -- | 2 | 2 | | | |
| REMOVE 2-WAY BRACKET ARM T.S. | EACH | -- | 1 | 1 | | | |
| REMOVE 3-WAY MAST ARM T.S. & MAST ARM | EACH | -- | 2 | 2 | | | |
| 1-WAY PEDESTRIAN BRACKET ARM T.S. | EACH | -- | 2 | 2 | | | |
| 1-WAY PEDESTRIAN T.S. ON 8 FT. PEDESTAL ON NEW FDN. | EACH | -- | 2 | 2 | | | |
| 1-WAY T.S. ON 8 FT. PEDESTAL ON NEW FDN. | EACH | -- | 1 | 1 | | | |
| TWO 3-WAY SPAN WIRE T.S. ON NEW SPAN WIRE | EACH | -- | 1 | 1 | | | |
| T.S. CONTROLLER & CABINET MOUNTED ON WOOD POLE | EACH | -- | 1 | 1 | | | |

| DATE | DESCRIPTION | CHKD. BY |
|---|---|---|
| | | |

*KELLY RD. WIDENING*
*GRAYTON TO NORTH OF SEYMOUR*
*QUANTITY SHEET M2000(171)*

CITY OF DETROIT
CITY ENGINEERING DEPARTMENT

DRAWN CEA
CHECKED
APPROVED
DATE 11 - 1983

PLAN PREPARED BY:
CONSULTING ENGINEERING ASSOCIATES INC.
ENGINEERING CONSULTANTS
16580 WYOMING DETROIT, MICH., 48221

DRWG. NO. 17 OF 17
FILE NO. CEA 1085

CHECKED BY
APPROVED BY

PUBLIC LIGHTING COMMISSION
CITY OF DETROIT

FILE NO. 48-0323
SHEET NO. 25 OF 25
DATE 11 - 1983