ROUTE	STATE PROJECT	FEDERAL NO.	SHEET NO.	TOTAL SHEETS
	82251	I-75-1(43)53	1	

THE IMPROVEMENTS COVERED BY THESE PLANS SHALL BE DONE IN ACCORDANCE WITH THE MICHIGAN STATE HIGHWAY DEPARTMENT CURRENT STANDARD SPECIFICATIONS AND SUPPLEMENTAL SPECIFICATIONS.

PROJECT NO. BI 82251F C16 & C27 UN

MICHIGAN

STATE HIGHWAY DEPARTMENT

JOHN C. MACKIE

STATE HIGHWAY COMMISSIONER

PLANS OF PROPOSED

MICHIGAN PROJECT I-75-1(43)-53
CONTROL SECTION BI 82251F C16 & C27 UN
THE WALTER P. CHRYSLER EXPRESSWAY

WAYNE COUNTY
CITY OF DETROIT

INDEX OF SHEETS

ROADWAYS AND MISCELLANEOUS

1	TITLE SHEET
2-10	TYPICAL CROSS SECTIONS
11	NOTES AND SPECIAL PROVISIONS
12	SURFACING PLAN
13-14	MAINTAINING TRAFFIC AND CONSTRUCTION SEQUENCE
15-16	REMOVAL ITEMS
17-18	GRADING PLAN
19-25	DETAILS OF EXPRESSWAY ALIGNMENT
26-30	PLAN AND PROFILE - EXPRESSWAY
31	PLAN AND PROFILE - TURNING ROADWAY
32-33	PLAN AND PROFILE - RAMPS
34-40	DETAILED GRADES
41-42	GENERAL UTILITY DRAWING
43-52	SPECIAL DETAILS

ALTERATIONS TO CITY SEWERS

53-56	HASTINGS SEWER RELOCATION

FIRE PROTECTION SYSTEM

57-59	PLAN AND DETAILS

ALTERATIONS TO PUBLIC LIGHTING

60-62	PLAN OF EXPRESSWAY LIGHTING
63-65	TEMPORARY DETOUR LIGHTING
66	WIRING DIAGRAM
67	DETOUR FLASHER SIGNALS
68-80	P.L.C. STANDARDS AND SPECIAL DETAILS
81-85	QUANTITY SHEETS

TRAFFIC SIGNS

401-402	CONSTRUCTION SEQUENCE FOR TRAFFIC SIGNS
403	PLAN OF TRAFFIC SIGNS
404	QUANTITY SHEET
405	DETAILS OF SPECIAL OVERHEAD TRUSS
406-435	TRAFFIC SIGN STANDARDS AND SPECIAL DETAILS

FOR INDEX OF PLANS OF S24, S25, S27, S29, AND S30 OF 82251F SEE SHEET NO. 102

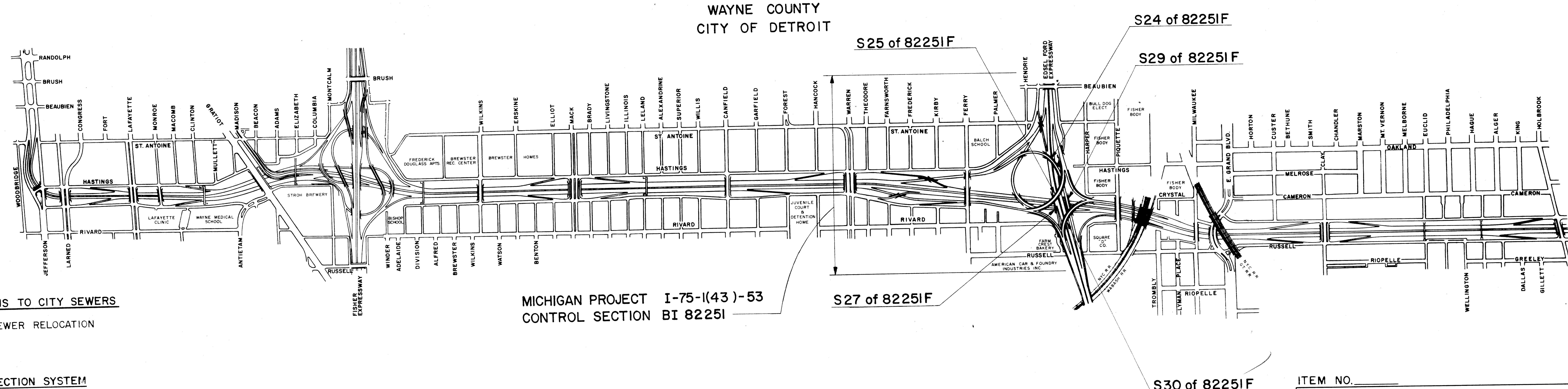

ITEM NO.

CONTRACT FOR G & DS PAVING & UTILITY ALTERATIONS

DIVISION APPROVAL

CHECKED ______ ENGINEER OF DESIGN-CONSULTANTS ______ DATE
RECOMMENDED FOR APPROVAL ______ TRAFFIC ENGINEER ______ DATE
RECOMMENDED FOR APPROVAL ______ ENGINEER OF BRIDGE AND ROAD DESIGN ______ DATE

OFFICES OF DESIGN AND CONSTRUCTION

APPROVED ______ CONSTRUCTION ENGINEER ______ DATE
APPROVED ______ CHIEF DESIGN ENGINEER ______ DATE

STATE HIGHWAY DEPARTMENT APPROVAL

APPROVED JOHN C. MACKIE, STATE HIGHWAY COMMISSIONER
BY ______ DIRECTOR OF ENGINEERING-CHIEF ENGINEER ______ DATE

PLANS PREPARED BY
CITY OF DETROIT
DEPARTMENT OF PUBLIC WORKS

DEPARTMENT OF COMMERCE
BUREAU OF PUBLIC ROADS
APPROVED [redacted]
DIVISION ENGINEER ______ DATE

PLANS PREPARED BY
CITY OF DETROIT
DEPARTMENT OF PUBLIC WORKS
CITY ENGINEERS OFFICE
BUREAU OF HIGHWAYS AND EXPRESSWAYS

APPROVED ______ ENGINEER OF EXPRESSWAYS
APPROVED ______ ASSISTANT CITY ENGINEER-HIGHWAYS AND EXPRESSWAYS
APPROVED ______ CITY ENGINEER
APPROVED ______ COMMISSIONER OF PUBLIC WORKS AND EXPRESSWAY COORDINATOR

82251F C16	PROJECT NO.	FEDERAL PROJECT	SHEET NO.
	82251	I-75-1(43)53	1

TYPICAL CROSS-SECTIONS

EDSEL FORD EXPRESSWAY

B.P.R. DIV. NO.	STATE	PROJ. NO.	FISCAL YEAR	SHEET NO.	TOTAL SHEETS
4	MICH.	I-75-1(43)53			
ROUTE	STATE PROJECT	COUNTY	City	SHEET NO.	TOTAL SHEETS
	82251	Wayne	Detroit	3	

B.P.R. DIV. NO.	STATE	PROJ. NO.	FISCAL YEAR	SHEET NO.	TOTAL SHEETS
4	MICH.				
ROUTE	STATE PROJECT	COUNTY		SHEET NO.	TOTAL SHEETS

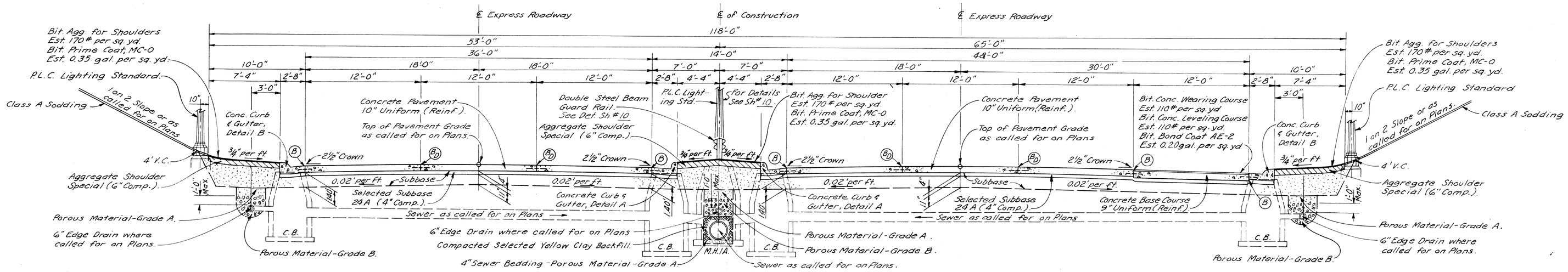

TYPICAL CROSS SECTION OF EXPRESSWAY SHOWING PAVEMENT, SUBBASE AND UNDERDRAINAGE

SCALE: 1" = 6'

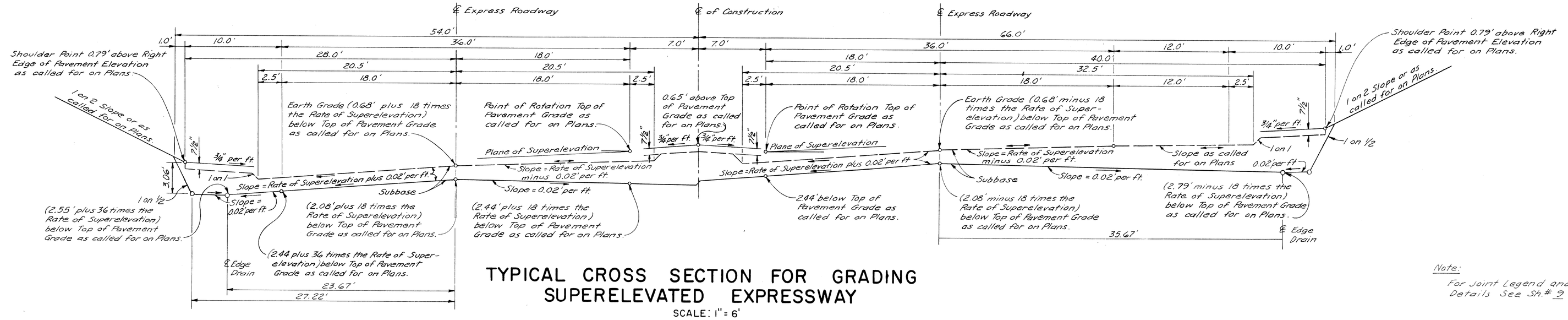

TYPICAL CROSS SECTION FOR GRADING SUPERELEVATED EXPRESSWAY

SCALE: 1" = 6'

Note:
For Joint Legend and Curb Details See Sh. # 9 & 10.

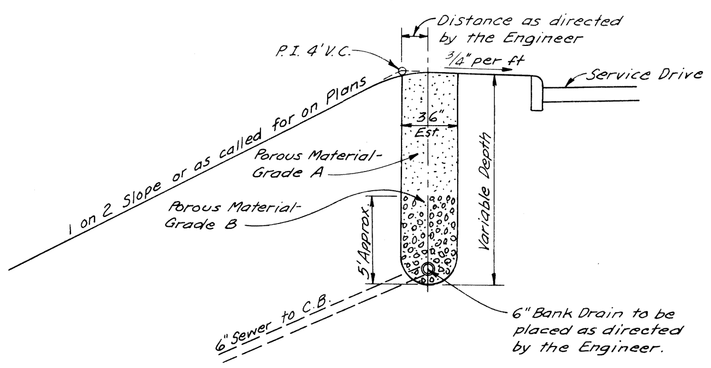

SKETCH SHOWING BANK DRAIN USED WHERE DIRECTED BY THE ENGINEER

SCALE: 1" = 6'

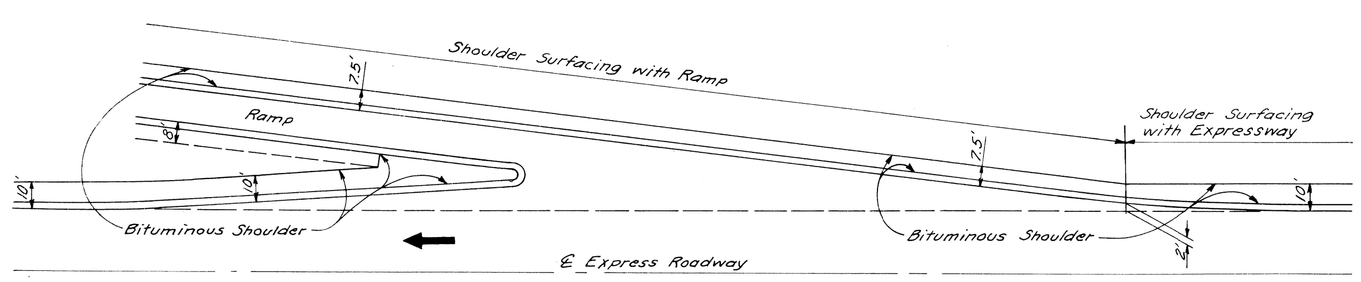

SKETCH SHOWING THE PLACEMENT OF BITUMINOUS SHOULDER AT RAMPS

SCALE: 1" = 40'

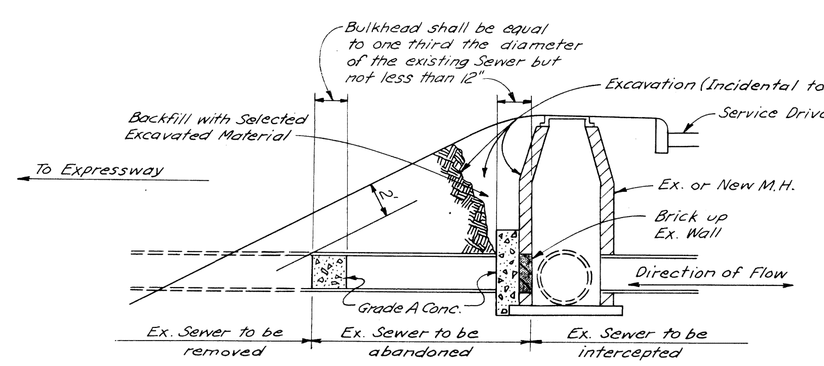

SKETCH SHOWING METHOD FOR BULKHEADING SEVERED SEWERS

SCALE: 1" = 6'

EDSEL FORD ROADWAYS

FILE NO. USE NO. 1250 STENCIL	82251 F C16	STATE PROJECT	FEDERAL PROJECT	SHEET NO.
		82251	I-75-1(43)53	3

B.P.R. DIV. NO.	STATE	PROJ. NO.	FISCAL YEAR	SHEET NO.	TOTAL SHEETS
4	MICH.	I-75-1(43)53			
ROUTE	STATE PROJECT	COUNTY	City	SHEET NO.	TOTAL SHEETS
	82251	Wayne	Detroit	4	

B.P.R. DIV. NO.	STATE	PROJ. NO.	FISCAL YEAR	SHEET NO.	TOTAL SHEETS
4	MICH.				
ROUTE	STATE PROJECT	COUNTY		SHEET NO.	TOTAL SHEETS

TYPICAL CROSS-SECTIONS

EDSEL FORD EXPRESSWAY

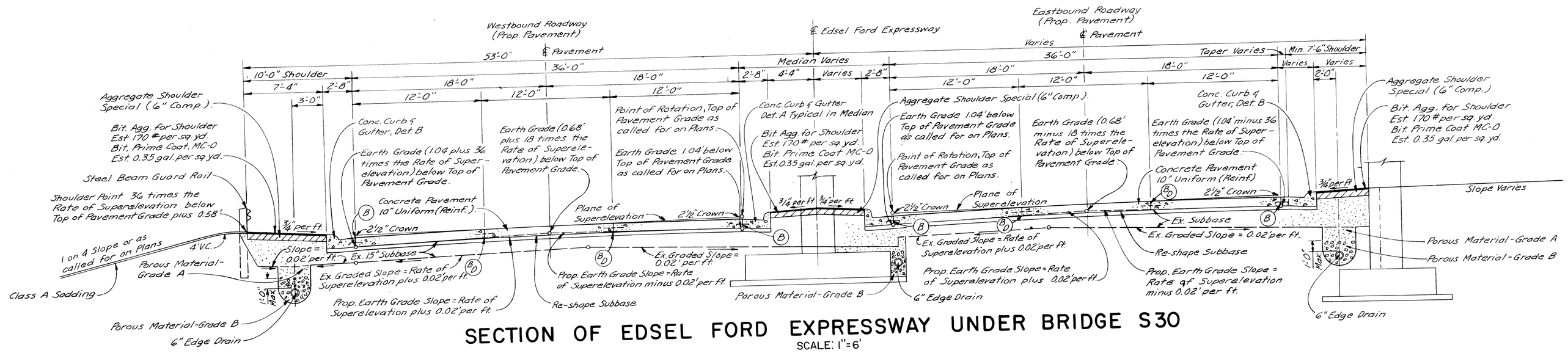

SECTION OF EDSEL FORD EXPRESSWAY UNDER BRIDGE S30

SCALE: 1"=6'

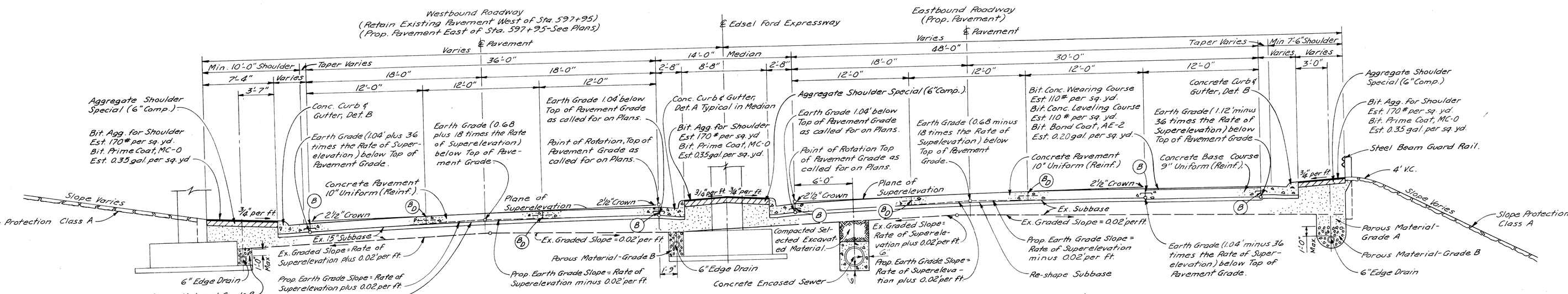

SECTION OF EDSEL FORD EXPRESSWAY UNDER BRIDGE S25

SCALE: 1"=6'

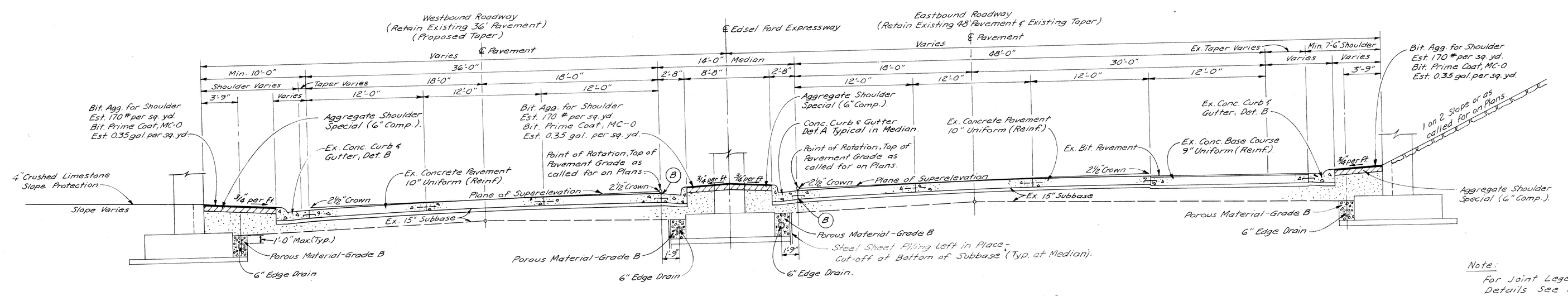

SECTION OF EDSEL FORD EXPRESSWAY UNDER BRIDGE S24

SCALE: 1"=6'

Note:
For Joint Legend and Curb Details See Sh# 9 & 10

EDSEL FORD EXPRESSWAY
SECTIONS UNDER BRIDGES

FILE NO. USE NO. 350 STENCIL	STATE PROJECT	FEDERAL PROJECT	SHEET NO.
82251 F C16	82251	I-75-1(43)53	4

TYPICAL CROSS-SECTIONS

EDSEL FORD EXPRESSWAY

B.P.R. DIV. NO.	STATE	PROJ. NO.	FISCAL YEAR	SHEET NO.	TOTAL SHEETS
4	MICH.	I-75-1(43)153			
ROUTE	STATE PROJECT	COUNTY	City	SHEET NO.	TOTAL SHEETS
	82251	Wayne	Detroit	2	
B.P.R. DIV. NO.	STATE	PROJ. NO.	FISCAL YEAR	SHEET NO.	TOTAL SHEETS
4	MICH.				
ROUTE	STATE PROJECT	COUNTY		SHEET NO.	TOTAL SHEETS

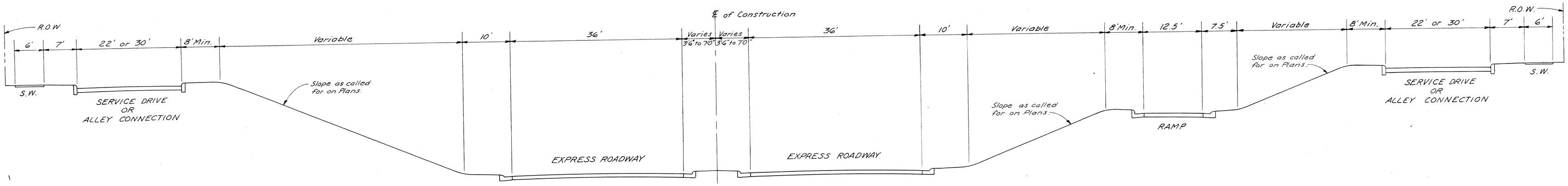

GENERAL TYPICAL CROSS SECTION

SCALE: 1" = 10'

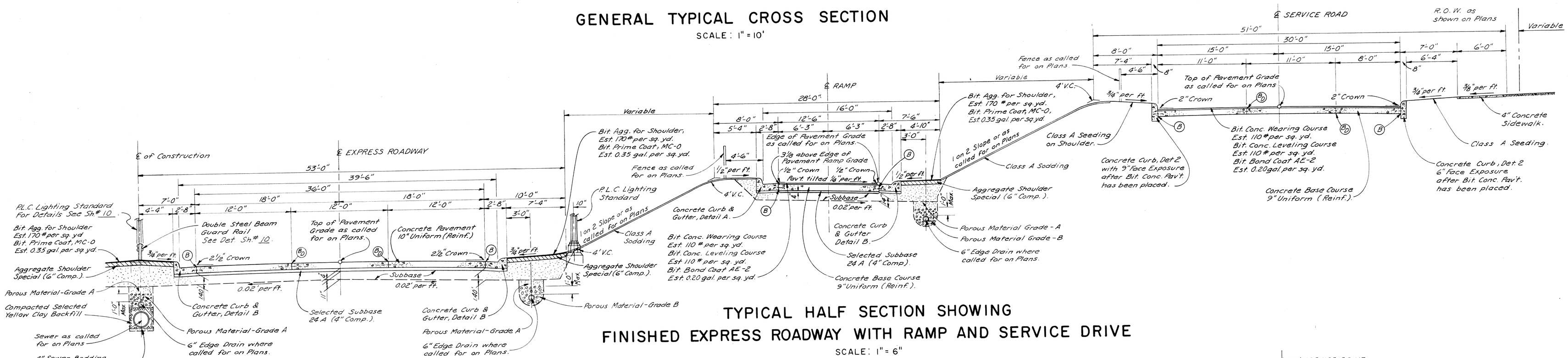

TYPICAL HALF SECTION SHOWING FINISHED EXPRESS ROADWAY WITH RAMP AND SERVICE DRIVE

SCALE: 1" = 6"

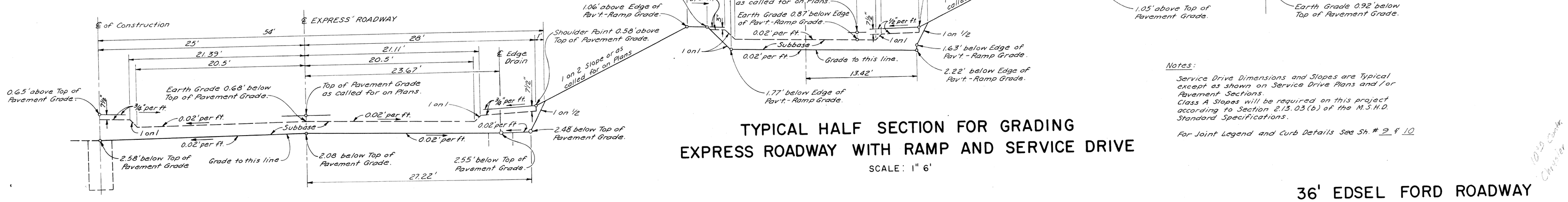

TYPICAL HALF SECTION FOR GRADING EXPRESS ROADWAY WITH RAMP AND SERVICE DRIVE

SCALE: 1" 6'

Notes:

Service Drive Dimensions and Slopes are Typical except as shown on Service Drive Plans and / or Pavement Sections.
Class A Slopes will be required on this project according to Section 2.13.03 (b) of the M.S.H.D. Standard Specifications.

For Joint Legend and Curb Details See Sh. # 9 & 10

10-23 Corr. Corridor

36' EDSEL FORD ROADWAY

FILE NO. MICRO-FILMED STENCIL	STATE PROJECT	FEDERAL PROJECT	SHEET NO.
82251 F C16	82251	I-75-1(43)153	2

TYPICAL CROSS-SECTIONS

WALTER P. CHRYSLER EXPRESSWAY

B. P. R. DIV. NO.	STATE	PROJ. NO.	FISCAL YEAR	SHEET NO.	TOTAL SHEETS
4	MICH.	I-75-1(49)53			
ROUTE	STATE PROJECT	COUNTY	City	SHEET NO.	TOTAL SHEETS
	82251	Wayne	Detroit	5	

B. P. R. DIV. NO.	STATE	PROJ. NO.	FISCAL YEAR	SHEET NO.	TOTAL SHEETS
4	MICH.				
P.JUTE	STATE PROJECT	COUNTY		SHEET NO.	TOTAL SHEETS

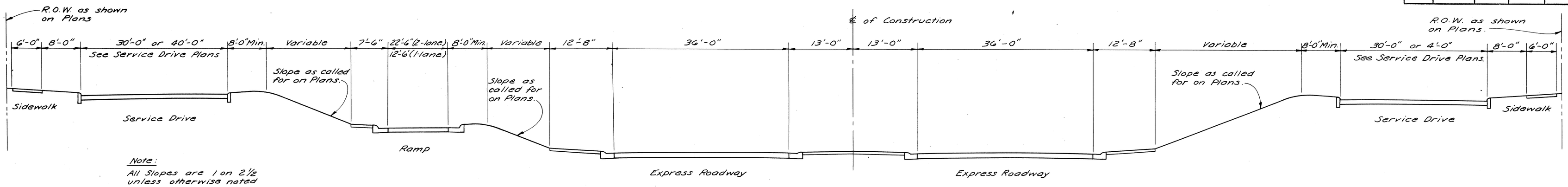

Note:
All Slopes are 1 on 2½ unless otherwise noted on Plans.

GENERAL TYPICAL CROSS SECTION

SCALE: 1" = 10'

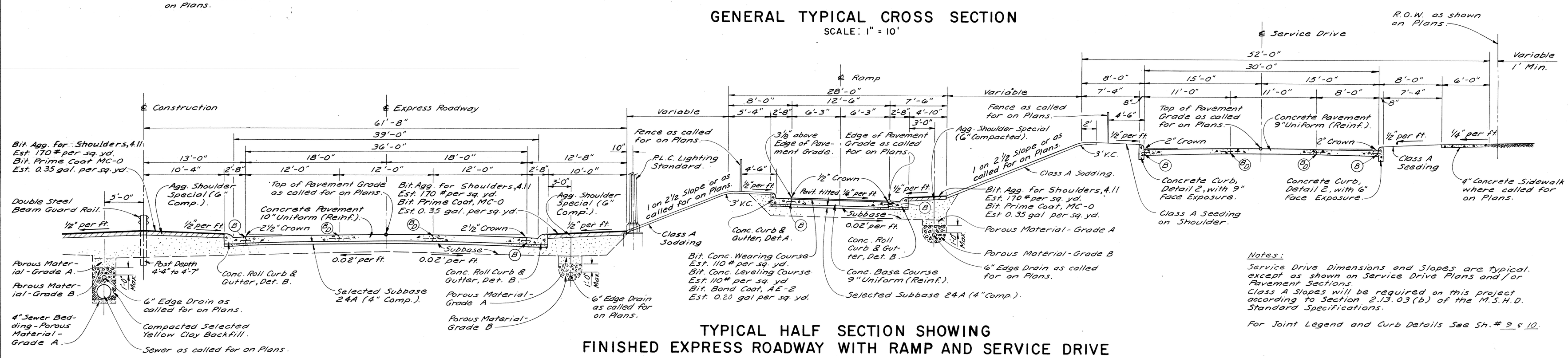

Notes:
Service Drive Dimensions and Slopes are typical. except as shown on Service Drive Plans and / or Pavement Sections.
Class A Slopes will be required on this project according to Section 2.13.03(b) of the M.S.H.D. Standard Specifications.

For Joint Legend and Curb Details See Sh. # 9 & 10

TYPICAL HALF SECTION SHOWING FINISHED EXPRESS ROADWAY WITH RAMP AND SERVICE DRIVE

SCALE: 1" = 6'

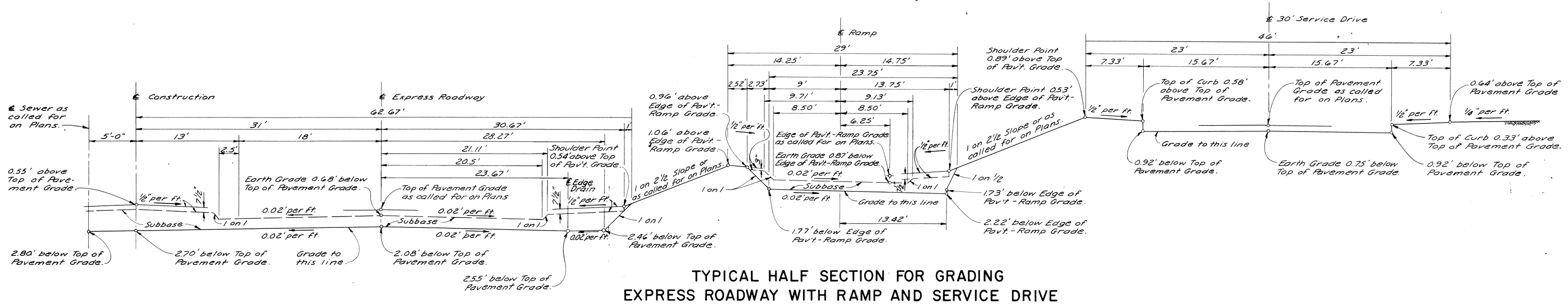

TYPICAL HALF SECTION FOR GRADING EXPRESS ROADWAY WITH RAMP AND SERVICE DRIVE

SCALE: 1" = 6'

36' WALTER P. CHRYSLER ROADWAYS

FILE NO. USE NO. 350 STENCIL	82251 F C 16	STATE PROJECT	FEDERAL PROJECT	SHEET NO.
		82251	I-75-1(49)53	5

TYPICAL CROSS-SECTIONS
WALTER P. CHRYSLER EXPRESSWAY

B.P.R. DIV. NO.	STATE	PROJ. NO.	FISCAL YEAR	SHEET NO.	TOTAL SHEETS
4	MICH.	I-75-1(43)153			
ROUTE	STATE PROJECT	COUNTY	City	SHEET NO.	TOTAL SHEETS
	82251	Wayne	Detroit	6	

B.P.R. DIV. NO.	STATE	PROJ. NO.	FISCAL YEAR	SHEET NO.	TOTAL SHEETS
4	MICH.				
ROUTE	STATE PROJECT	COUNTY		SHEET NO.	TOTAL SHEETS

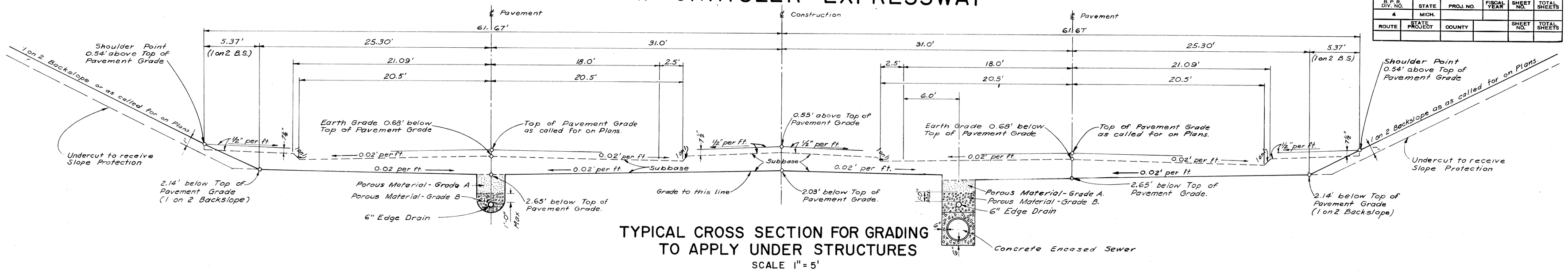

TYPICAL CROSS SECTION FOR GRADING TO APPLY UNDER STRUCTURES
SCALE 1" = 5'

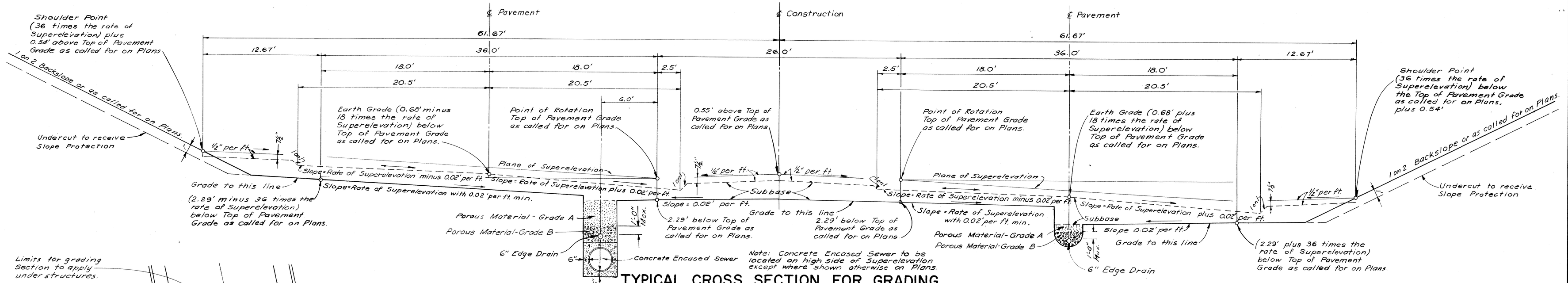

TYPICAL CROSS SECTION FOR GRADING TO APPLY UNDER STRUCTURES ON SUPERELEVATED CURVES
SCALE 1" = 5'

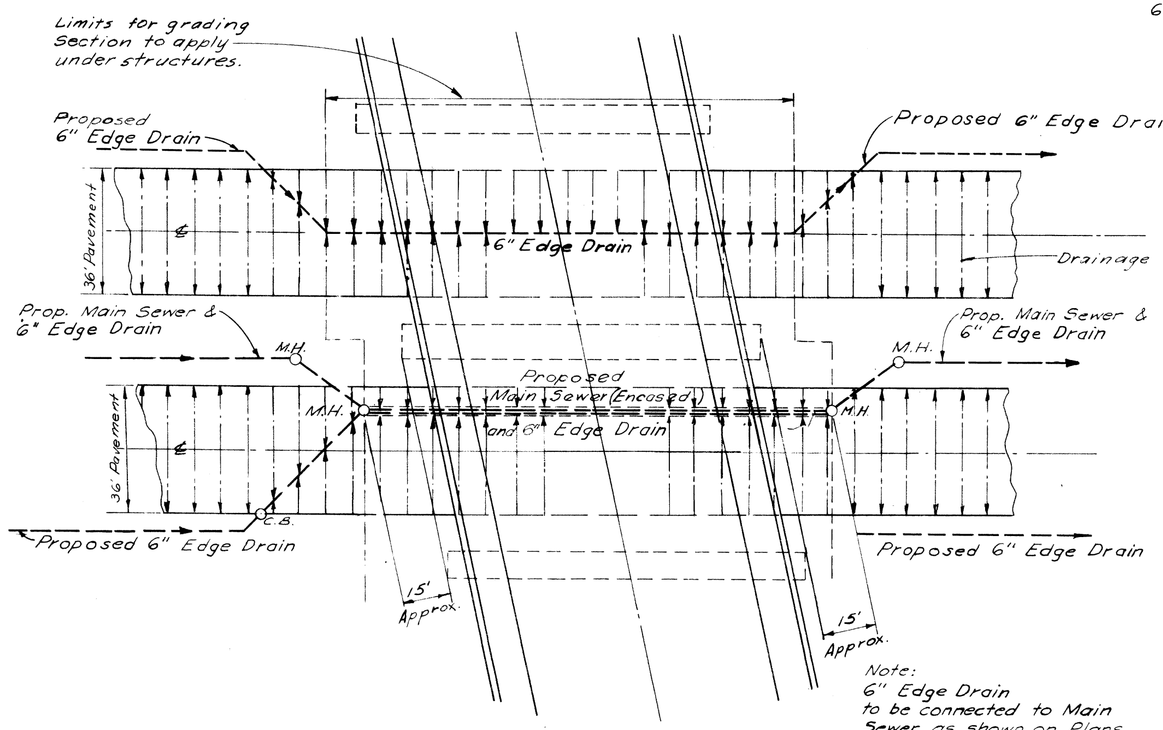

PLAN SHOWING SUBBASE DRAINAGE UNDER STRUCTURES

NOTE: For Joint Legend and Curb Details See Sh. # 9 & 10

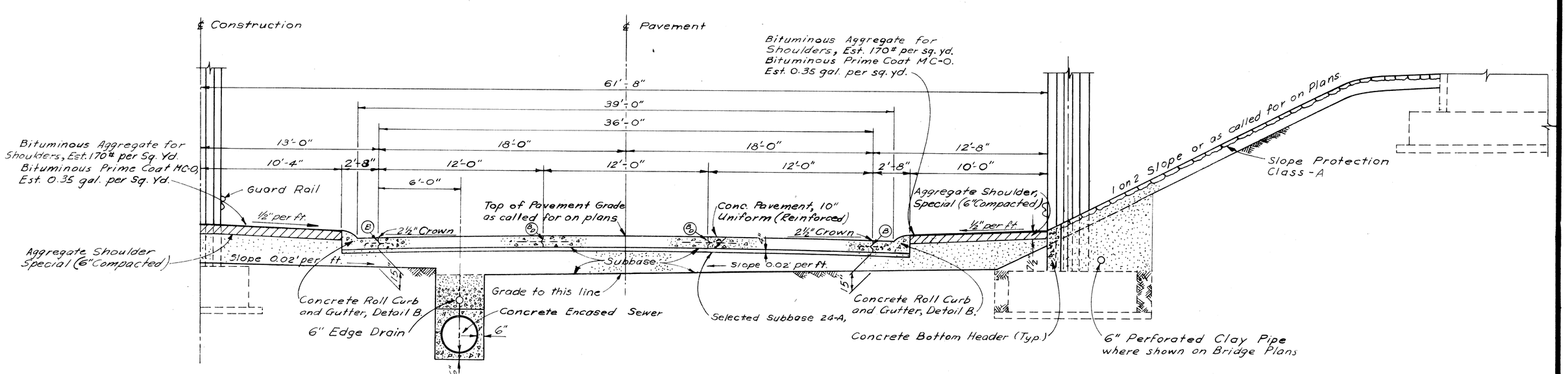

TYPICAL HALF SECTION SHOWING FINISHED EXPRESS ROADWAY TO APPLY UNDER STRUCTURES
SCALE 1" = 5'

36' WALTER P. CHRYSLER ROADWAYS

FILE NO. USE NO. 350 STENCIL	82251 F C16	STATE PROJECT	FEDERAL PROJECT	SHEET NO.
		82251		6

TYPICAL CROSS-SECTIONS

B.P.R. DIV. NO.	STATE	PROJ. NO.	FISCAL YEAR	SHEET NO.	TOTAL SHEETS
4	MICH.	I-75-1(65)153			
ROUTE	STATE PROJECT	COUNTY	City	SHEET NO.	TOTAL SHEETS
	82251	Wayne	Detroit	7	

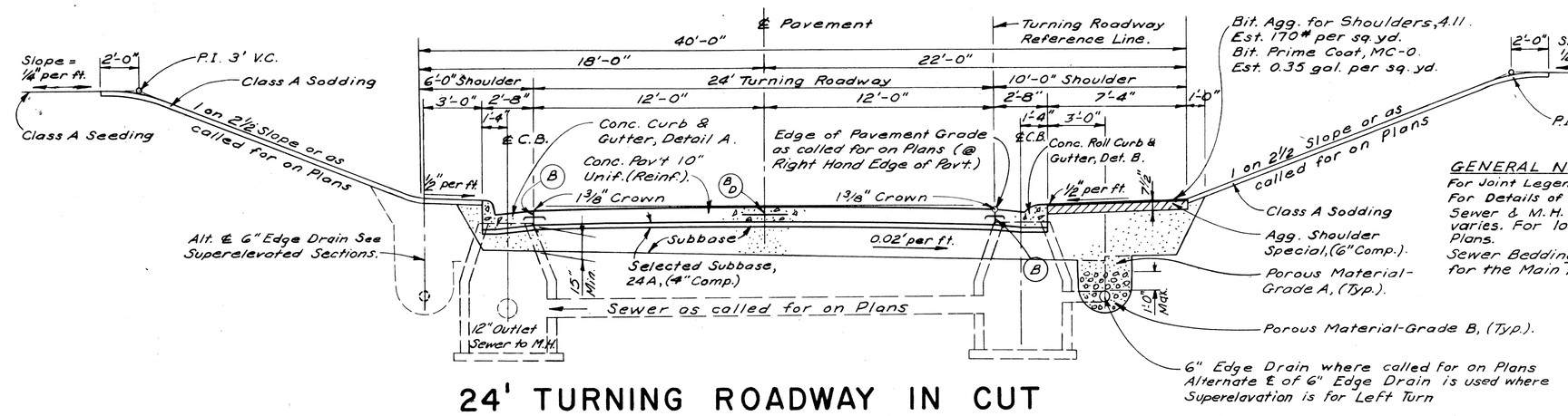

24' TURNING ROADWAY IN CUT

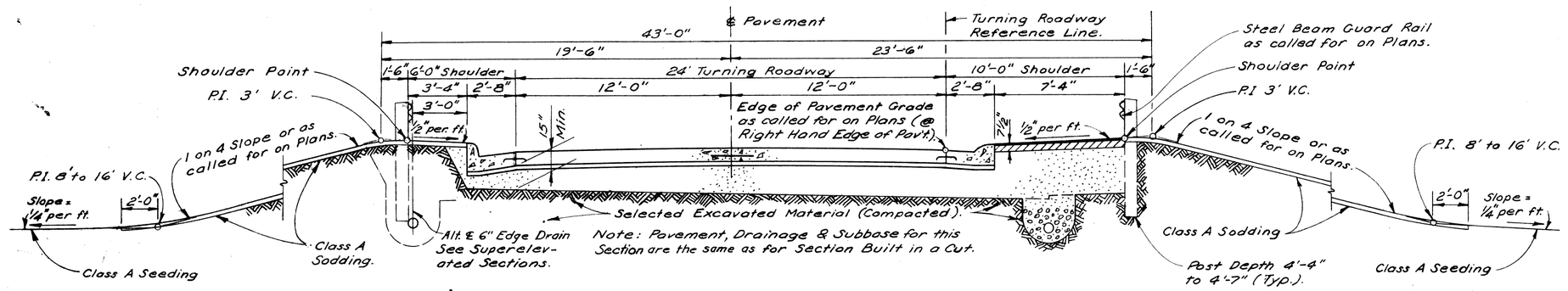

24' TURNING ROADWAY ON EMBANKMENT

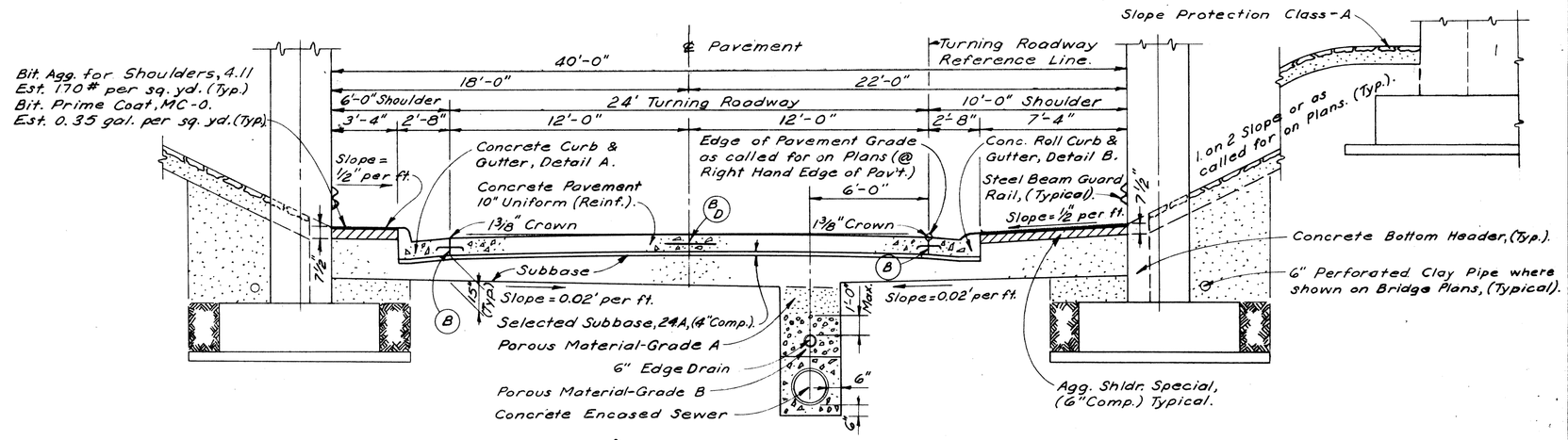

FINISHED SECTION FOR 24' TURNING ROADWAY UNDER STRUCTURES

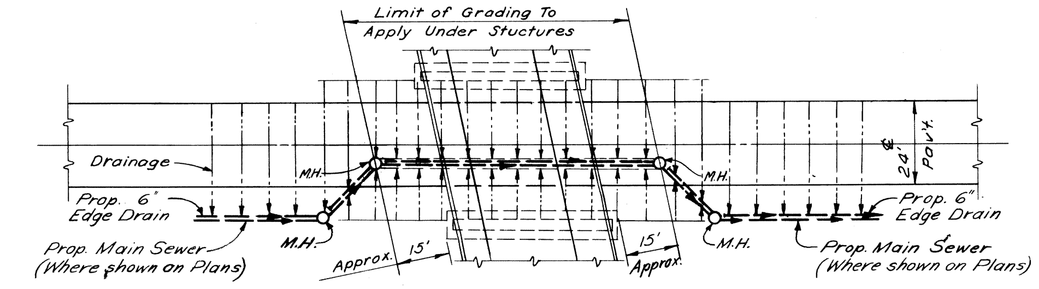

SUBBASE DRAINAGE PLAN FOR 24' TURNING ROADWAY UNDER STRUCTURES

Not to Scale

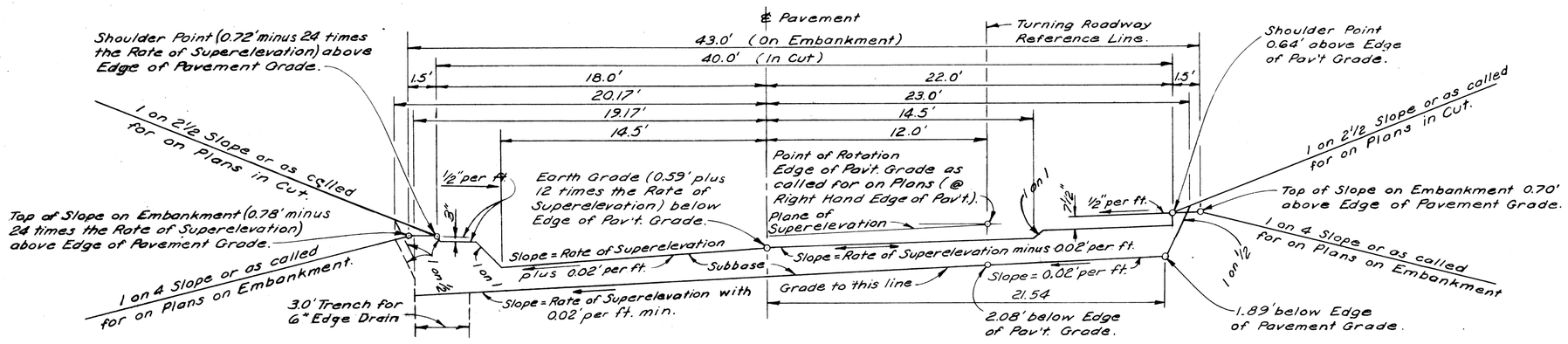

GRADING FOR SUPERELEVATED 24' TURNING ROADWAY

(TURNING TO LEFT)

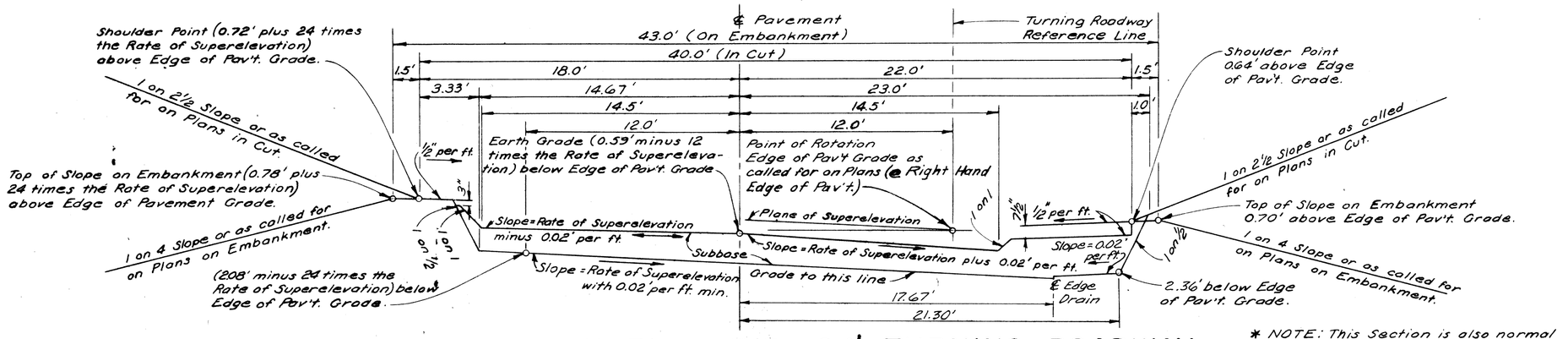

GRADING FOR SUPERELEVATED 24' TURNING ROADWAY

(TURNING TO RIGHT) *

* NOTE: This Section is also normal Grading Section when Rate of Superelevation equals zero.

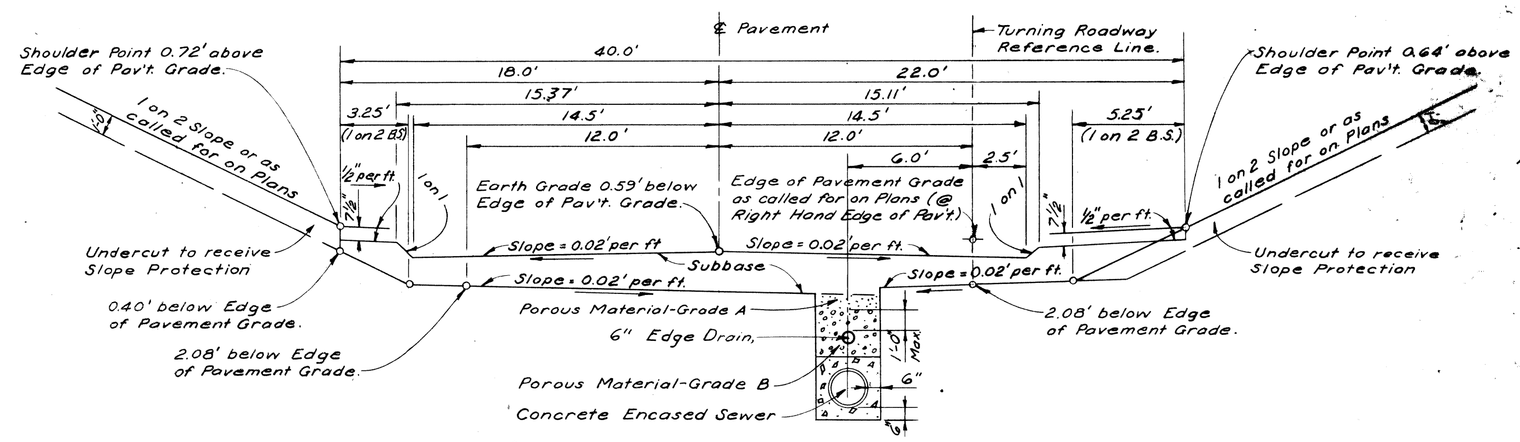

GRADING FOR 24' TURNING ROADWAY UNDER STRUCTURES

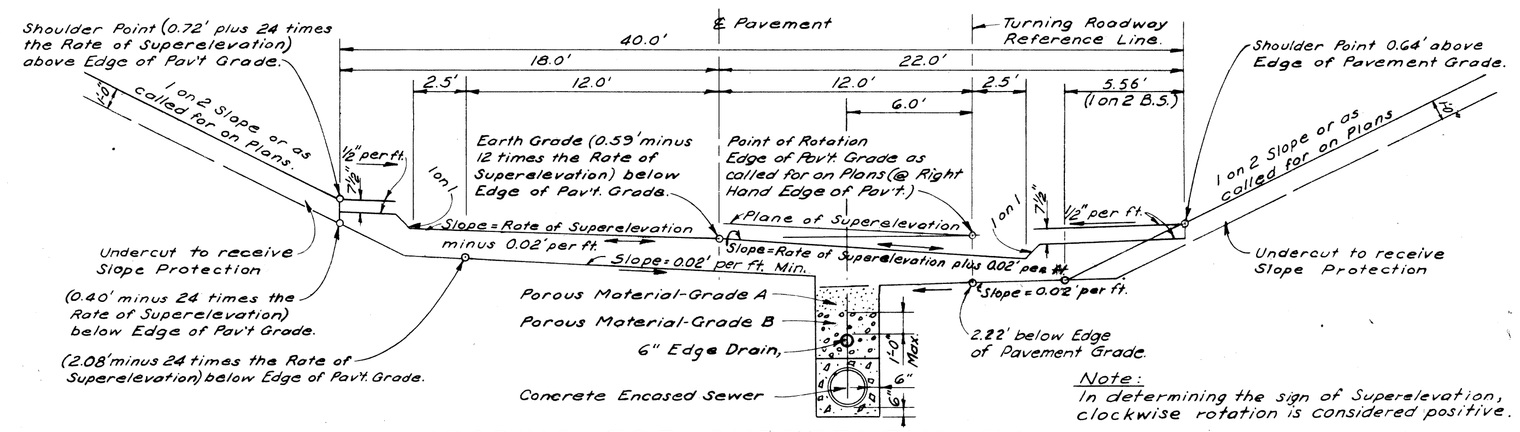

Note: In determining the sign of Superelevation, clockwise rotation is considered positive.

GRADING FOR SUPERELEVATED 24' TURNING ROADWAY UNDER STRUCTURES

SCALE: 1" = 5'

PLANS PREPARED BY
CITY OF DETROIT
DEPARTMENT OF PUBLIC WORKS
CITY ENGINEERS OF
BUREAU OF HIGHWAYS AND EXPRESSWAYS

FILE NO. IBM NO. 350 STENCIL	82251 F C16	STATE PROJECT	FEDERAL PROJECT	SHEET NO.
		82251	I-75-1(65)153	7

TYPICAL CROSS-SECTIONS

B.P.R. DIV. NO.	STATE	PROJ. NO.	FISCAL YEAR	SHEET NO.	TOTAL SHEETS
4	MICH.	I-75-1(43)55			
ROUTE	STATE PROJECT	COUNTY	City	SHEET NO.	TOTAL SHEETS
	82251	Wayne	Detroit	8	

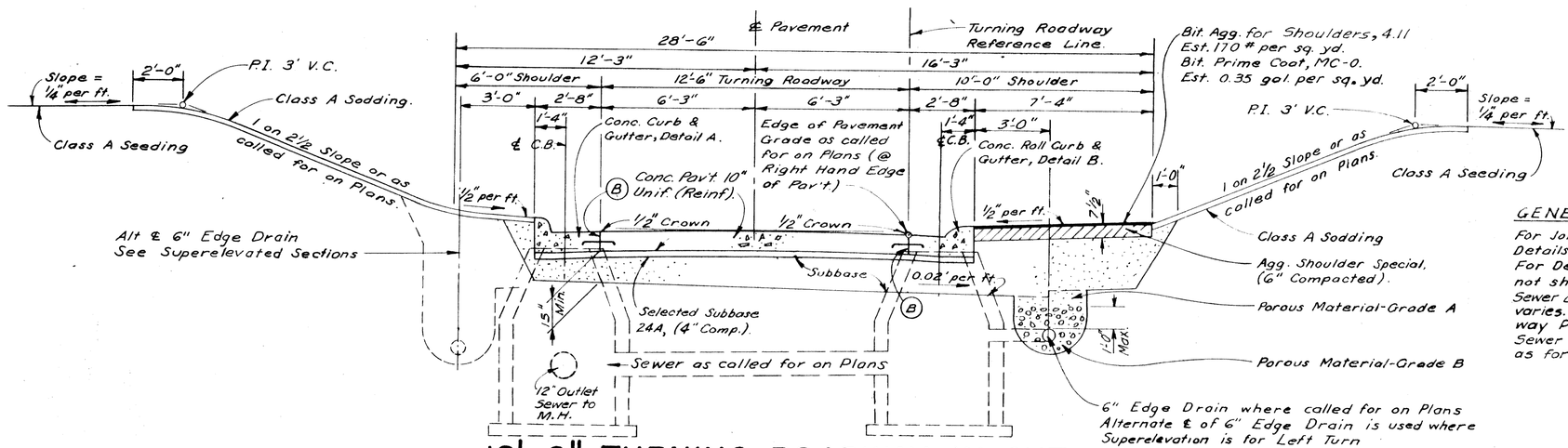

12'-6" TURNING ROADWAY IN CUT

GENERAL NOTES:

For Joint Legend and Curb Details See Sh # 9 & 10.
For Details of Pavement not shown See Sh # 9 & 10.
Sewer & M.H. not dimensioned as location varies. For location see Turning Roadway Plans.
Sewer Bedding & Backfill is the same as for Main Roadway Sewers.

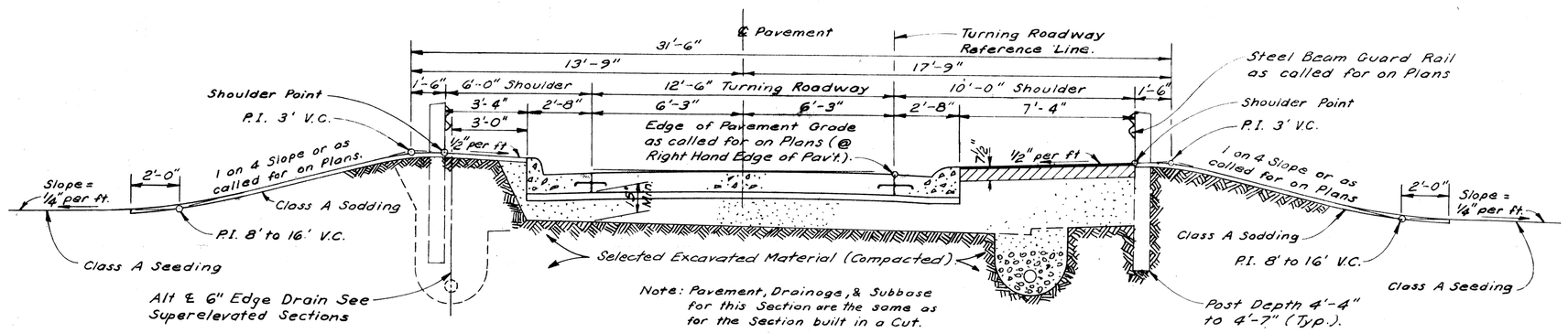

12'-6" TURNING ROADWAY ON EMBANKMENT

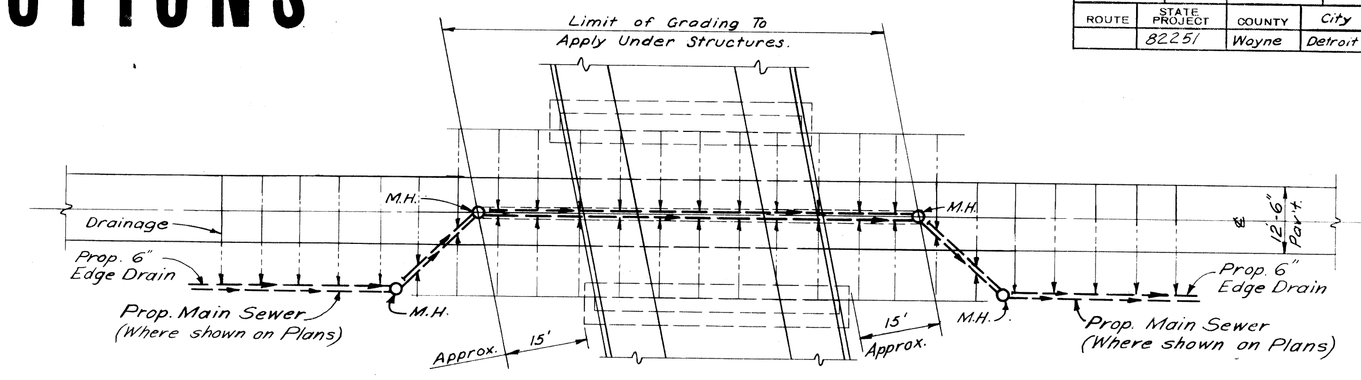

SUBBASE DRAINAGE PLAN FOR
12'-6" TURNING ROADWAY UNDER STRUCTURES
Not to Scale

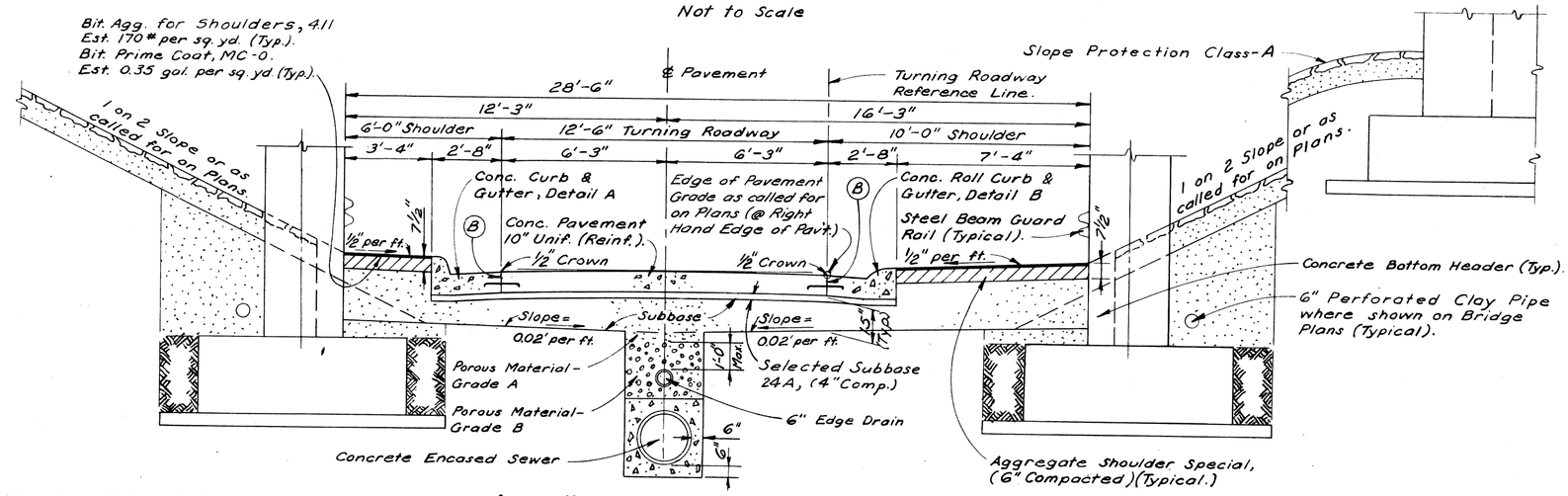

FINISHED SECTION FOR 12'-6" TURNING ROADWAY UNDER STRUCTURES

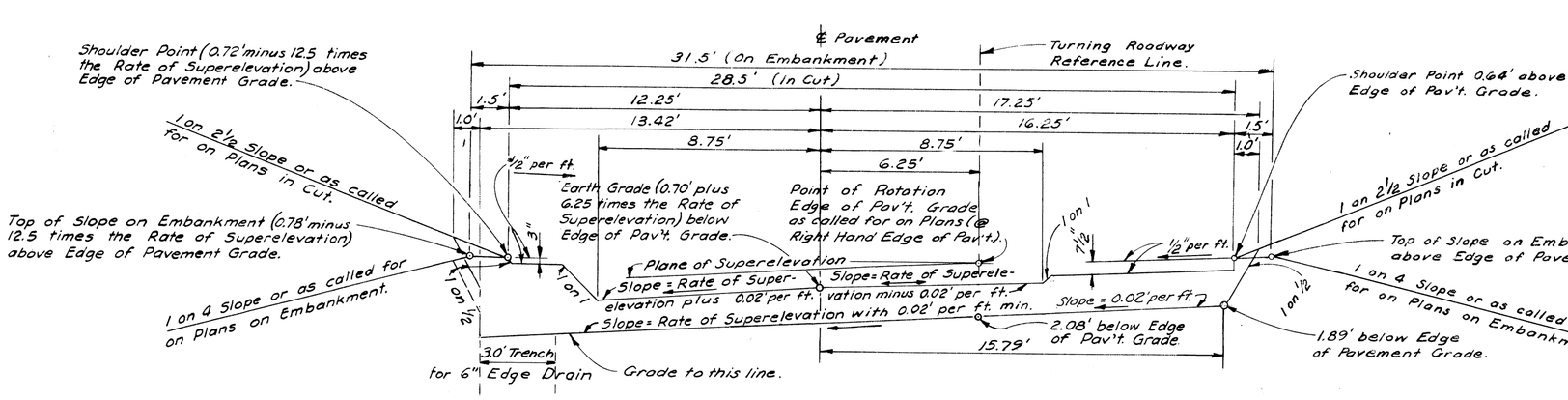

GRADING FOR SUPERELEVATED 12'-6" TURNING ROADWAY
(TURNING TO LEFT)

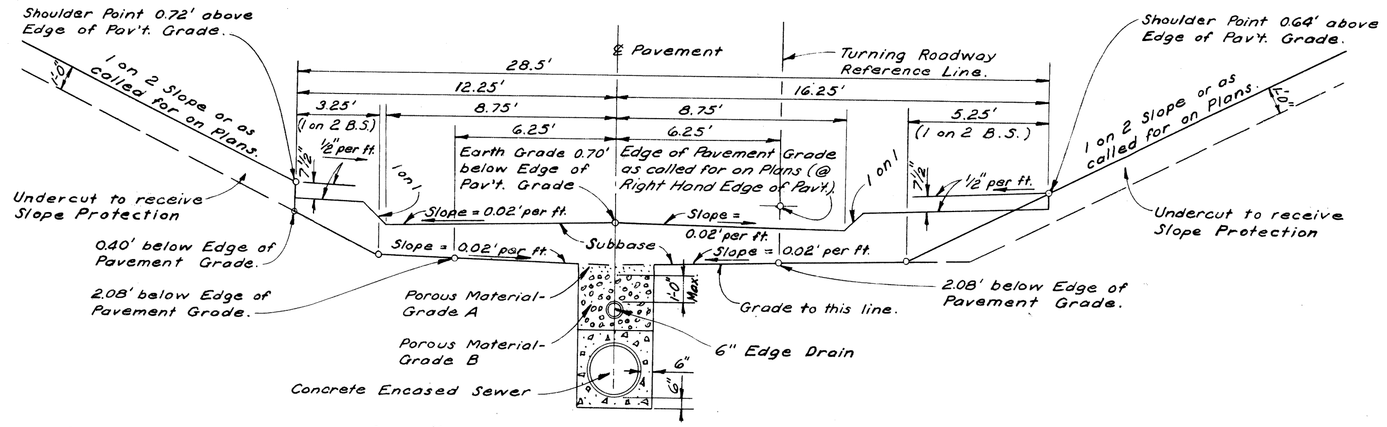

GRADING FOR 12'-6" TURNING ROADWAY UNDER STRUCTURES

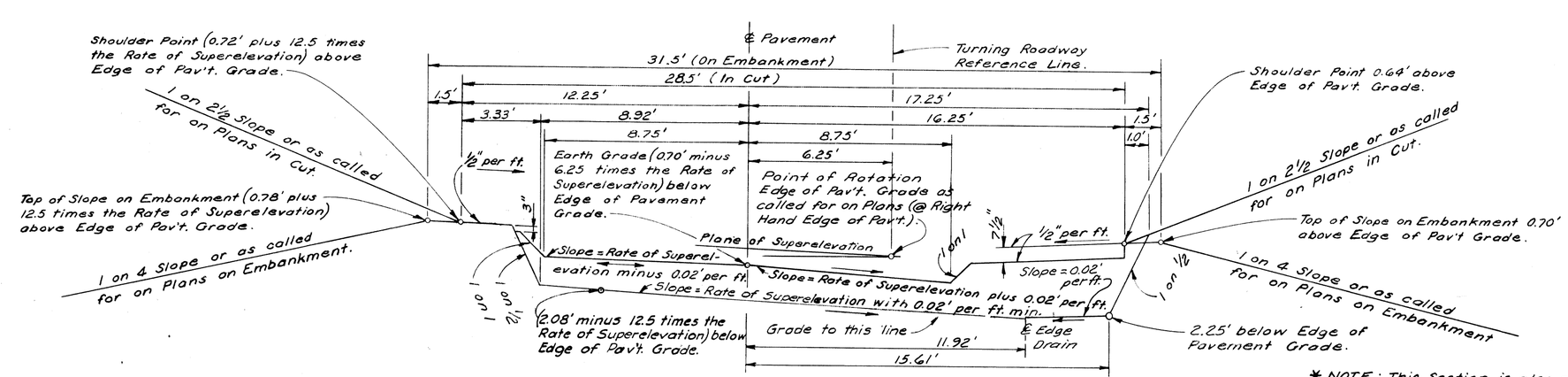

GRADING FOR SUPERELEVATED 12'-6" TURNING ROADWAY
(TURNING TO RIGHT) *

* NOTE: This Section is also normal grading Section when Rate of Superelevation equals zero.

SCALE: 1"=4'

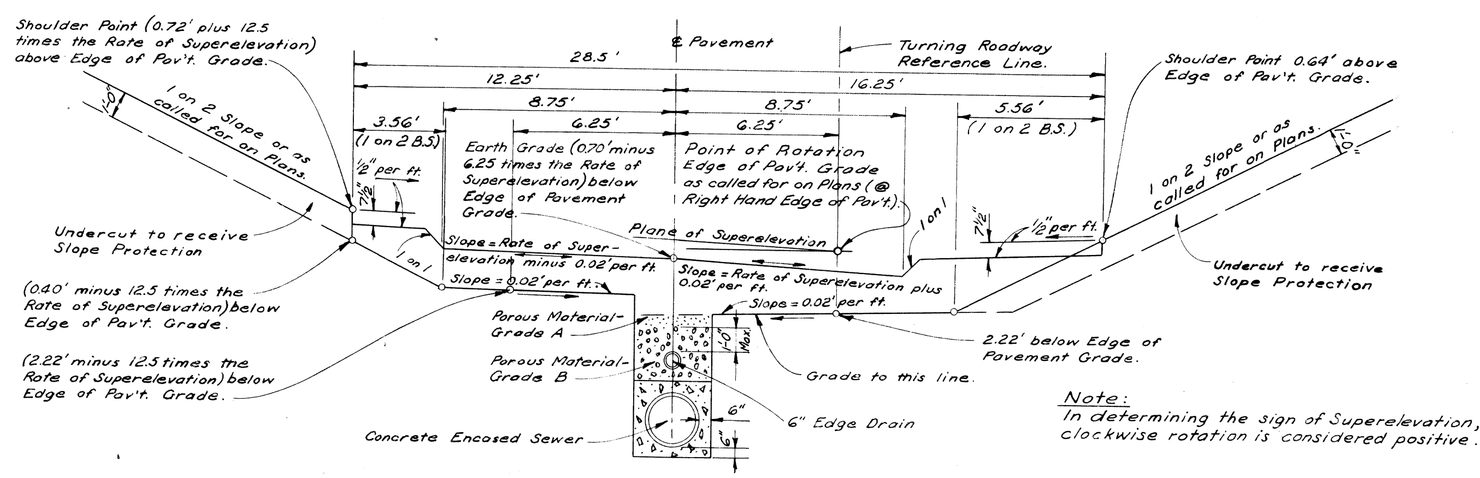

Note:
In determining the sign of Superelevation, clockwise rotation is considered positive.

GRADING FOR SUPERELEVATED 12'-6" TURNING ROADWAY UNDER STRUCTURES

PLANS PREPARED BY CITY OF DETROIT DEPARTMENT OF PUBLIC WORKS CITY ENGINEER'S OFFICE BUREAU OF HIGHWAYS AND EXPRESSWAYS

FILE NO. USE NO. 350 STENCIL	STATE PROJECT	FEDERAL PROJECT	SHEET NO.
82251 F C16	82251	I-75-1(43)55	8

TYPICAL CROSS-SECTIONS

B.P.R. DIV. NO.	STATE	PROJ. NO.	FISCAL YEAR	SHEET NO.	TOTAL SHEETS
4	MICH	(75-1)83(53			
ROUTE	STATE PROJECT	COUNTY	City	SHEET NO.	TOTAL SHEETS
	B2251	Wayne	Detroit	3	

B.P.R. DIV. NO.	STATE	PROJ. NO.	FISCAL YEAR	SHEET NO.	TOTAL SHEETS
4	MICH				
ROUTE	STATE PROJECT	COUNTY		SHEET NO.	TOTAL SHEETS

PLANS PREPARED BY
CITY OF DETROIT
DEPARTMENT OF PUBLIC WORKS
CITY ENGINEERS OFFICE
BUREAU OF HIGHWAYS AND EXPRESSWAYS

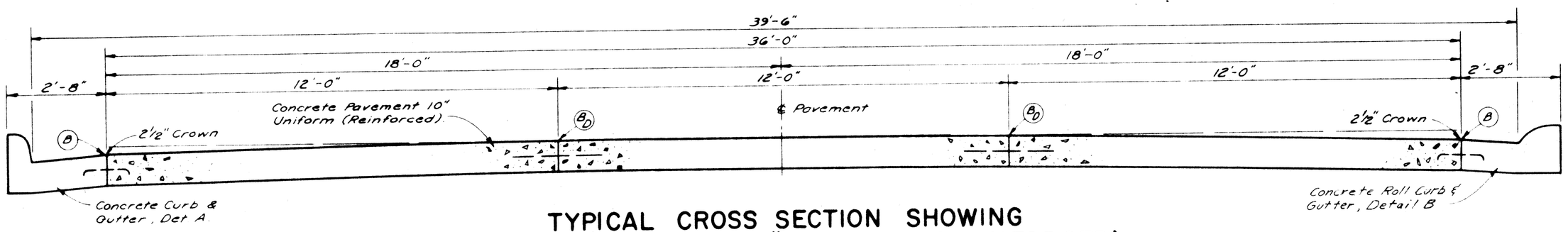

TYPICAL CROSS SECTION SHOWING
CONCRETE PAVEMENT 10" UNIFORM (REINFORCED)
36' EDSEL FORD EXPRESS ROADWAY — SCALE: ½"= 1'

JOINT LEGEND

- B — Longitudinal Bulkhead Construction Joint, according to M.S.H.D. Std. Plan E-4-A-33G, Detail 2
- D — Longitudinal Lane Tie Joint with Tie Bars, according to M.S.H.D. Std. Plan E-4-A-33G, Detail 1
- B D — Optional B or D

NOTE: The Concrete Base Course and Concrete Pavement shall be reinforced throughout in accordance with M.S.H.D. Std. Plan E-4-A-21F.

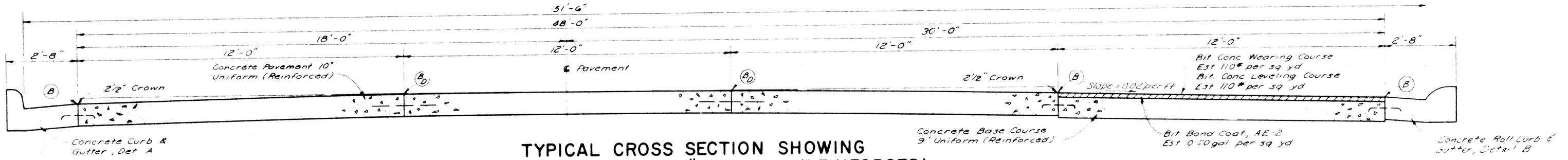

TYPICAL CROSS SECTION SHOWING
CONCRETE PAVEMENT 10" UNIFORM (REINFORCED)
48' EDSEL FORD EXPRESS ROADWAY — SCALE: ½"= 1'

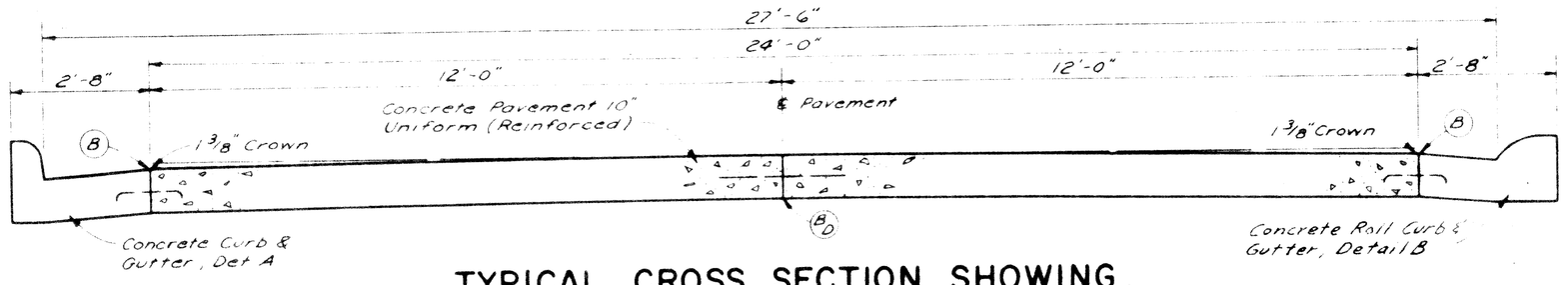

TYPICAL CROSS SECTION SHOWING
CONCRETE PAVEMENT 10" UNIFORM (REINFORCED)
TO APPLY ON 24' TURNING ROADWAY — SCALE: ½"= 1'

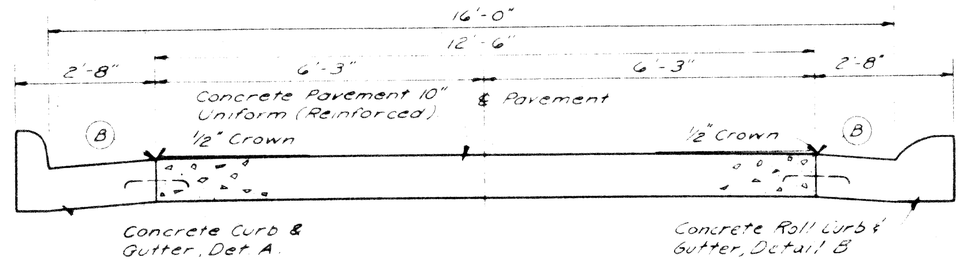

TYPICAL CROSS SECTION SHOWING
CONCRETE PAVEMENT 10" UNIFORM (REINFORCED)
TO APPLY ON 12.5' TURNING ROADWAY — SCALE: ½"= 1'

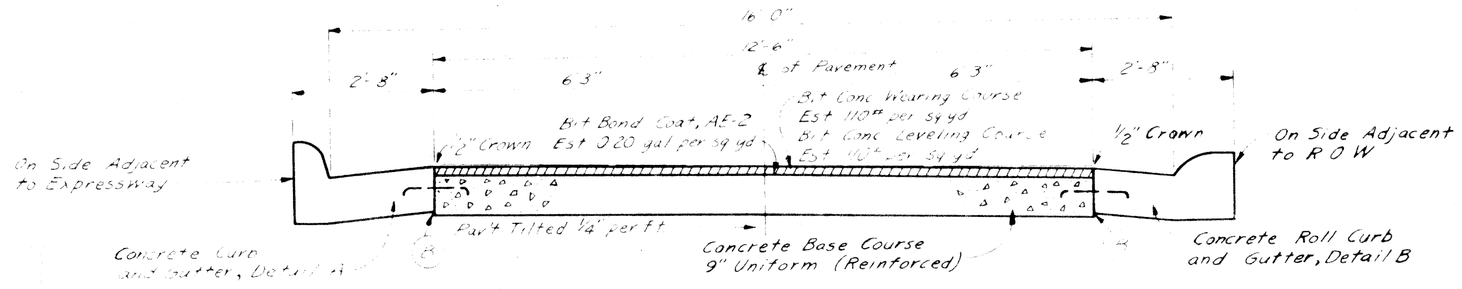

TYPICAL CROSS SECTION SHOWING
CONCRETE BASE COURSE 9" UNIFORM (REINFORCED)
WITH BITUMINOUS CONCRETE PAVEMENT
TO APPLY ON 12.5' RAMP — SCALE: ½"= 1'

PAVEMENT SECTIONS

FILING OF MICH. DEPT. OF HIGHWAYS STENCIL	82251 F C16	STATE PROJECT B2251	SHEET NO.	TOTAL SHEETS

TYPICAL CROSS-SECTIONS

B.P.R. DIV. NO.	STATE	PROJ. NO.	FISCAL YEAR	SHEET NO.	TOTAL SHEETS
4	MICH.	I-75-1(43)53			
ROUTE	STATE PROJECT	COUNTY	City	SHEET NO.	TOTAL SHEETS
	82251	Wayne	Detroit	10	

B.P.R. DIV. NO.	STATE	PROJ. NO.	FISCAL YEAR	SHEET NO.	TOTAL SHEETS
4	MICH.				
ROUTE	STATE PROJECT	COUNTY		SHEET NO.	TOTAL SHEETS

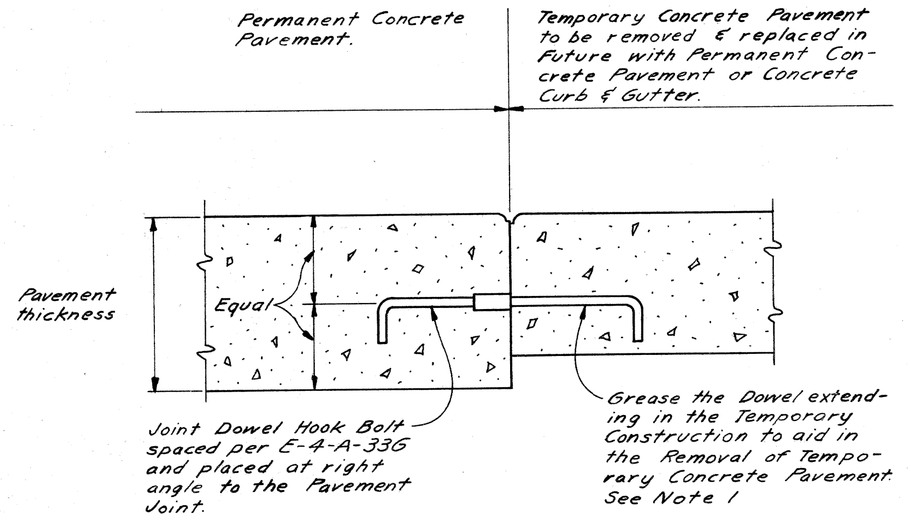

LONGITUDINAL BULKHEAD CONSTRUCTION JOINT

FOR TEMPORARY CONCRETE PAVEMENT ADJACENT TO PERMANENT CONCRETE PAVEMENT

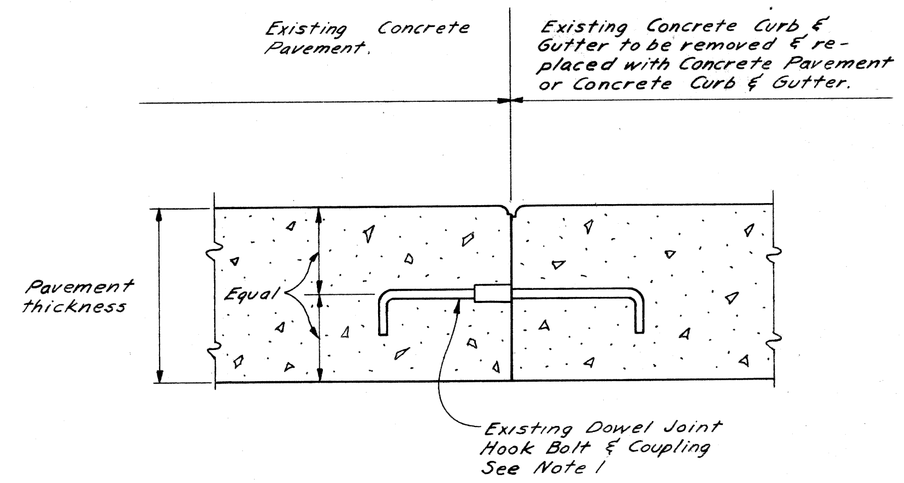

LONGITUDINAL BULKHEAD CONSTRUCTION JOINT

FOR PROPOSED CONCRETE PAVEMENT OR PROPOSED CONCRETE CURB & GUTTER ADJACENT TO EXISTING PAVEMENT

NOTES:

1. The Engineer will direct the Contractor to use one of the following three methods to provide dowels between existing Concrete Construction and proposed Concrete Construction.
   a. Reuse the existing Dowel Joint Hook Bolt if undamaged after removal of existing Concrete Construction.
   b. Provide new Dowel Joint Hook Bolt for attachment to the existing coupling.
   c. Drill holes in existing pavement and furnish and set 5/8" ϕ x 13" Expansion Hook Bolt spaced per E-4-A-336. See detail of Expansion Hook Bolt.

   The materials and workmanship required to provide dowels are to be considered as incidental to the construction of Concrete Pavement or Concrete Curb & Gutter. No extra payment will be made for these Items.
2. For Superelevated Turning Roadways the slope of the Gutter on the high side of the Superelevation shall equal .08 ft/ft. minus the rate of Superelevation. (See Special Detail at Catch Basins)

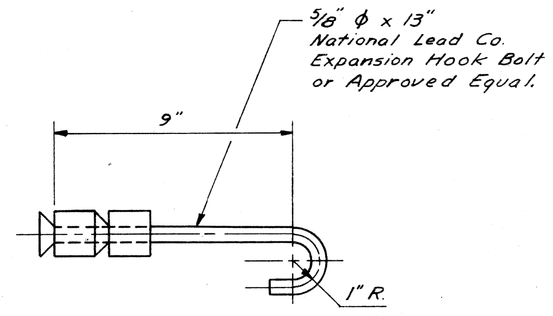

EXPANSION HOOK BOLT

SCALE: 1" = 4"

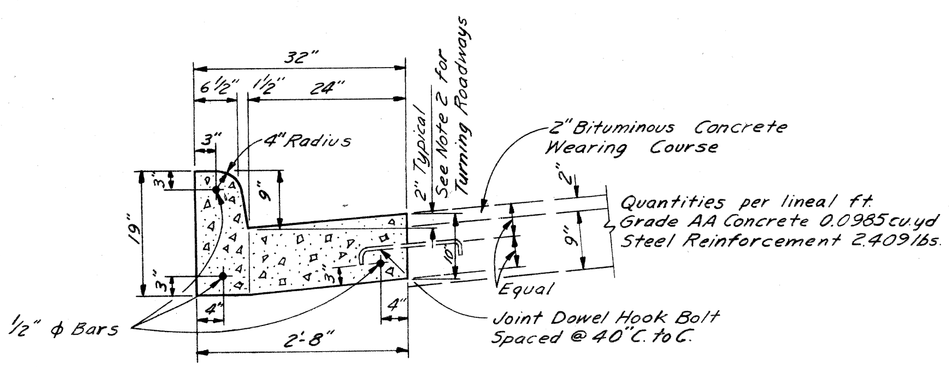

Note: General Notes on M.S.H.D. Std. Dwg. E-4-A-29F shall apply.

CONCRETE CURB & GUTTER, DETAIL A.

SCALE: 3/4" = 1'

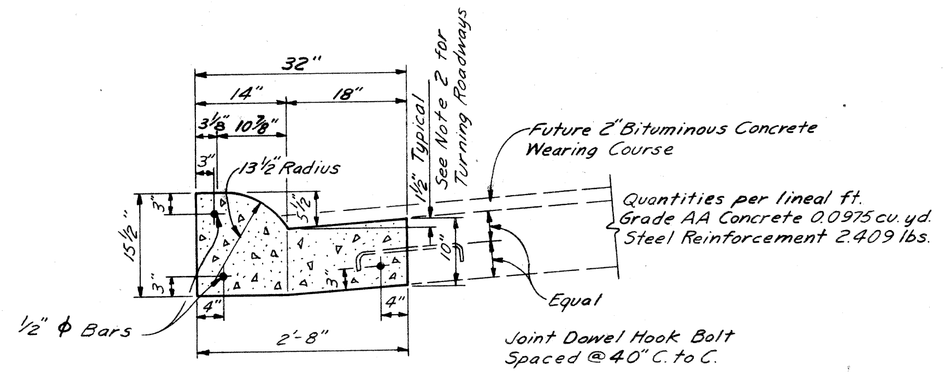

CONCRETE ROLL CURB & GUTTER, DETAIL B.

SCALE: 3/4" = 1'

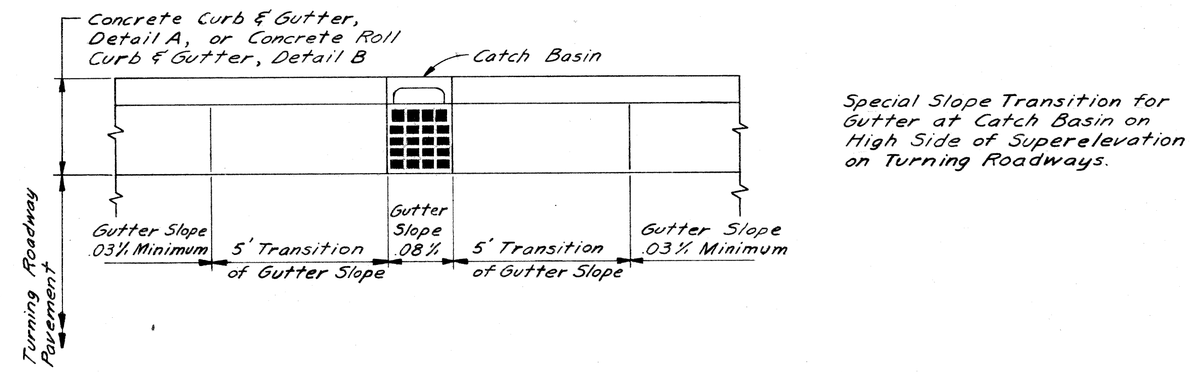

SPECIAL GUTTER TRANSITION

SCALE: 1"= 3'

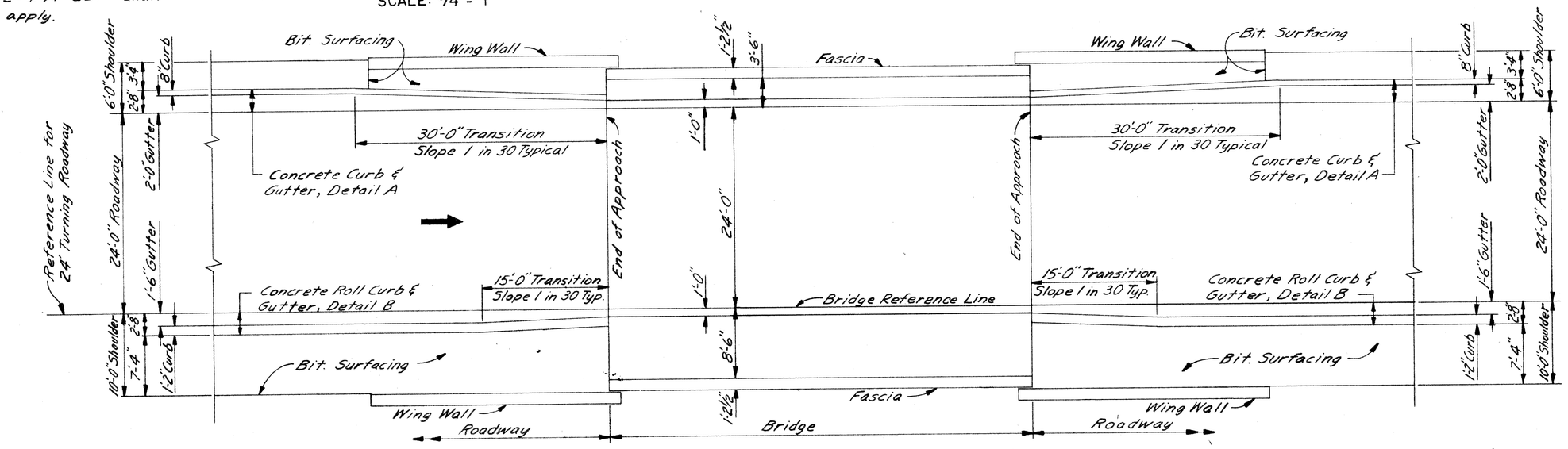

PLAN OF GUTTER TRANSITION ON 24'-0" TURNING ROADWAYS AT BRIDGES

SCALE: 1" = 10'

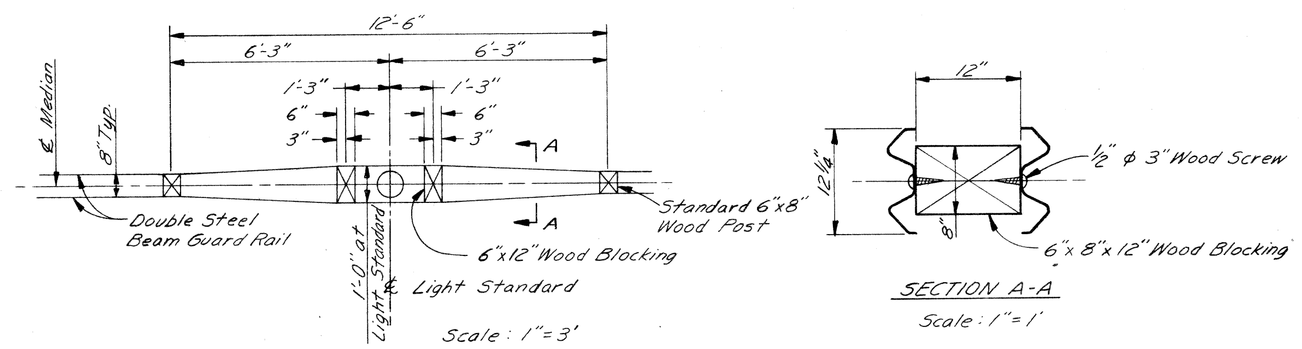

DETAIL OF DOUBLE STEEL BEAM GUARD RAIL AT LIGHTING STANDARD

PAVEMENT SECTIONS

FILE NO. NO SEND STENCIL	82251 F C16	STATE PROJECT	FEDERAL PROJECT	SHEET NO.
		82251	I-75-1(43)53	10

SPECIAL PROVISIONS

GRADES FOR INTERSECTIONS

All intersections are to be considered as complete units and their grades determined before construction is started.

TRANSVERSE JOINTS IN CONCRETE PAVEMENT

Transverse joints in concrete pavement shall be placed according to details on Standard Plan E-4-A-135B and E-4-A-127B.

TRANSVERSE PLANE OF WEAKNESS JOINTS IN CONCRETE BASE COURSE

Transverse plane of weakness joints shall be placed according to Standard Plan E-4-A-127B

TRANSVERSE JOINTS IN CONCRETE BASE COURSE

In the concrete base course widening, transverse plane of weakness joints shall be placed in line with expansion joints in the existing concrete pavement.

HAND FINISHING

Hand finishing according to 4 14.03-q-1 of the Standard-Specifications will be permitted on intersections outside of the normal traffic lanes.

PAVEMENT REINFORCEMENT

The pavement reinforcement shall conform to Standard Plan E-4-A-21F except that the length of sheet or mat for 12 foot lanes may be 15'-0" instead of 10'-0". The laying lap for 15-foot length sheet or mat shall be 13 inches. The computed weight of steel per standard sheet is as follows:

Type of Reinforcement	Weight per 15-foot length of Standard Sheet for 12-foot Lanes in Lbs.
Mesh	128.9
Bar Mat	142.2
Expanded Metal	138.0

GENERAL PLAN NOTES

POLES

No poles will be permitted within the right of way along this project except as authorized by the Engineer.

The following items of work shall be done as they apply throughout the project. These items are not detailed or included on the plan and profile sheets.

I 82251 F C16 UN

	Fine Grading Stas.	Fine Grading and Cleanup Stas.	Trimming and Finishing Earth Grade Stas.
EXPRESS ROADWAYS			
Eastbound Ford			
586+90 — 590+28		1.00	
595+90 — 603+80	4.80	0.85	
Westbound Ford			
590+18 — 595+00		0.30	
595+00 — 595+65		0.50	
597+95 — 605+07	5.40		
Northbound Chrysler			
164+10 — 167+00			~~2.90~~
Southbound Chrysler			
164+10 — 167+00			~~2.90~~
TURNING ROADWAYS			
Northbound and Southbound to Westbound			
38+75 — 40+45		1.70	
Westbound to Southbound			
10+00 — 11+14		1.15	
13+00 — 17+80 .3400 — 16+00		~~4.80~~ 3.6	
Eastbound to Northbound			
22+90 — 25+40			~~2.50~~
RAMPS			
Beaubien Exit Ramp			
593+60 — 597+60		3.80	
Russell Exit Ramp			
601+22 — 602+60		1.40	
Russell Exit Ramp — Temp. Connection			
~~602+60 — 604+10~~		~~1.50~~ -0-	
TOTALS	10.20	~~17.90~~ 13.70	~~0.30~~ -0- DELETED by REC #38

Decreased by Rec. #30

I 82251 F C16 UN

Water, 1000 Gallon Units	19 Units
Calcium Chloride, Type I — Admixed	~~4.7 Tons~~ -0-

Deleted by Rec. #27

I 82251 F C27 UN

Rye Seeding	0.1 Acres
Class A Seeding	~~0.5 Acres~~
Mulching	0.9 Tons

Deleted by Addm 1019

The following items are estimated for the entire project to correct possible unstable subgrade conditions where designated by the Engineer.

I 82251 F C16 UN

6" Bank Drains	-0- ~~180 Lin. Ft.~~ DELETED by REC #41
6" Sewer (6.1'-14.0' Deep) for Bank Drains	-0- ~~139 Lin. Ft.~~
Excavation (Waste from Bank Drain Sewer Trenches)	-0- ~~246 Cu. Yds.~~ DELETED by REC #33
Porous Material — Grade A (Compacted in Place)	-0- 149 Cu. Yds.
Porous Material — Grade B (Compacted in Place)	-0- ~~95 Cu. Yds.~~ DELETED by REC #41

B.P.R. DIV. NO.	STATE	PROJ. NO.	FISCAL YEAR	SHEET NO.	TOTAL SHEETS
4	MICH.	I-75-1(43)53			
ROUTE	STATE PROJECT	COUNTY	City	SHEET NO.	TOTAL SHEETS
	82251	Wayne	Detroit	11	

B.P.R. DIV. NO.	STATE	PROJ. NO.	FISCAL YEAR	SHEET NO.	TOTAL SHEETS
4	MICH.				
ROUTE	STATE PROJECT	COUNTY		SHEET NO.	TOTAL SHEETS

NOTES APPLYING TO STANDARD PLANS

Where the following items are called for on plans, they are to be constructed according to the Standard Plan given below opposite each item unless otherwise indicated.

Cross references on Standard Plans shall be understood to refer to the latest approved Standard Plan for the detail in question.

Edge Drain	E-4-A-9D, Detail 5
Sodding	E-4-A-10C
Pavement Reinforcement	E-4-A-21F
Grading Cross-Sections	E-4-A-26D
Manholes, Catch Basins and Inlets	E-4-A-27R-3
Cover A	E-4-A-27A-3
Cover B	Optional-E-4-A-27B-3 or E-4-A-27B-4
Cover D	E-4-A-27D-3
Concrete Curb, Roll Curb and Curb and Gutter	E-4-A-29F
Curb and Gutter Headers	E-4-A-29F, Detail 9
Curb and Gutter Endings	E-4-A-29F, Detail 14
Driveway Returns and Driveway Openings	E-4-A-29F
Concrete End Header (at pavement ends)	E-4-A-29F, Detail 20
Bridge Header	E-4-A-29F, Detail 21
Pavement Joints	E-4-A-33G (except that plain tie bars will not be permitted.)
Superelevation of Curves	E-4-A-49B-7 (except that the rate of superelevation is to be called for on plans.)
Pavement Crowns	E-4-A-49B-7
Two Cable Guard Rail and Guard Posts	E-4-A-75C 2
Road Project Markers	E-4-A-77D
4" Concrete Sidewalk	E-4-A-110B, Detail 2
7" Concrete Sidewalk	E-4-A-110B, Detail 3
Concrete Pavement, 7" Uniform	E-4-A-110B, Detail 4
Typical Joint Layout	E-4-A-127B
Tile Trap	E-4-A-129
Dowel Bar Installation for Load Transfer at Transverse Contraction and Expansion Joints	Optional E-4-A-130A, E-4-A-130B, E-4-A-130D, or other approved equal
Base Plates for Transverse Pavement Joints	E-4-A-138 (except that spot welds may be substituted for rivets to attach the one inch angle.)
Location of Transverse Expansion and Contraction Joints in Concrete Pavement	E-4-A-135B
Barricade and Project Sign	E-6-A-55E
Steel Beam Guard Rail	E-4-A-137C
Double Steel Beam Guard Rail	E-4-A-140

FILE NO. USE NO. 350 STENCIL	82251 F C16	STATE PROJECT	FEDERAL PROJECT	SHEET NO.
		82251	I-75-1(43)53	11

B.P.R. DIV. NO.	STATE	PROJ. NO.	FISCAL YEAR	SHEET NO.	TOTAL SHEETS
4	MICH.	I-75-1(43)53			
ROUTE	STATE PROJECT	COUNTY	City	SHEET NO.	TOTAL SHEETS
	82251	Wayne	Detroit	12	

B.P.R. DIV. NO.	STATE	PROJ. NO.	FISCAL YEAR	SHEET NO.	TOTAL SHEETS
4	MICH.				
ROUTE	STATE PROJECT	COUNTY		SHEET NO.	TOTAL SHEETS

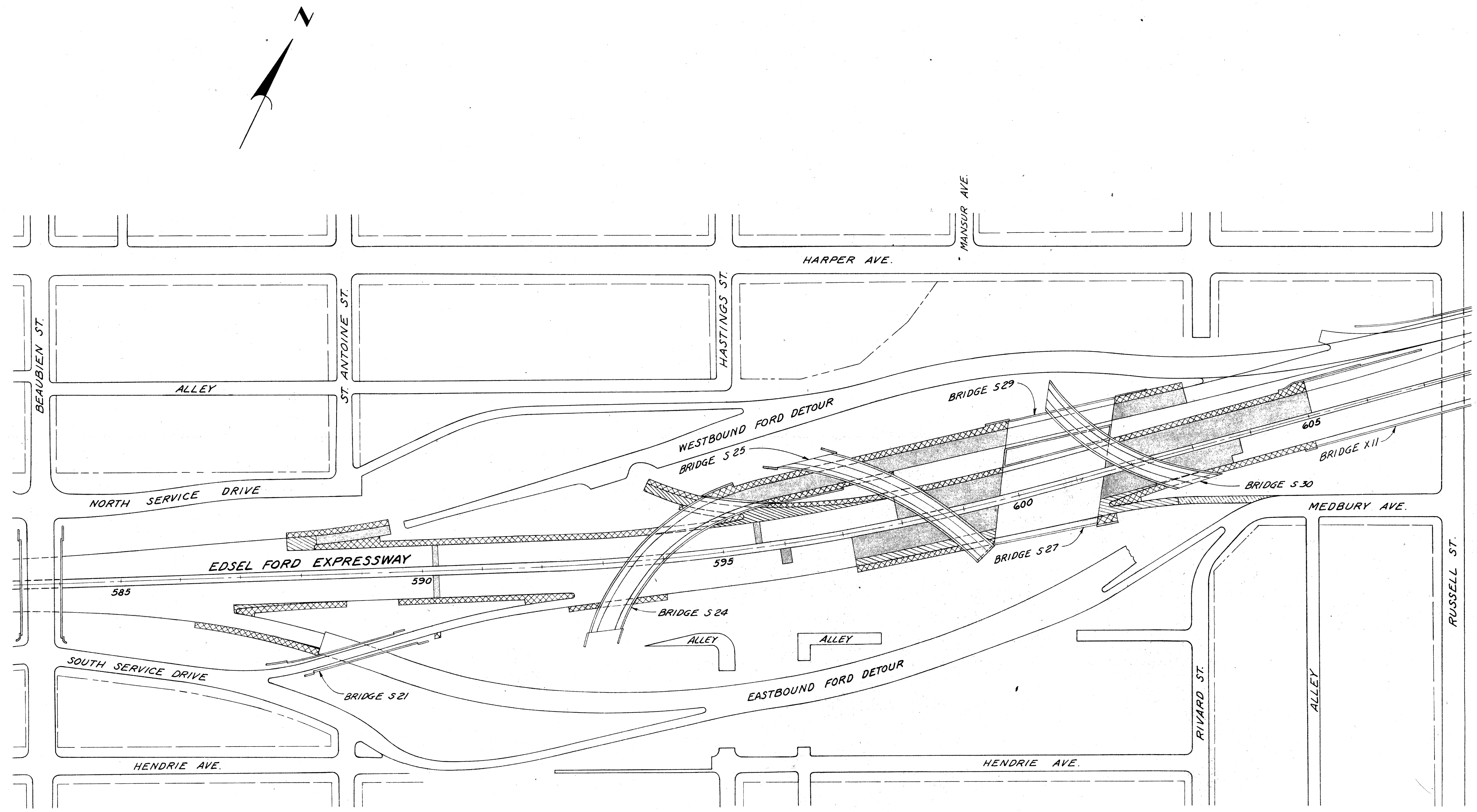

TO BE CONSTRUCTED THIS CONTRACT:

- 10" Uniform Concrete Pavement
- Bituminous Concrete Class I, on 9" Uniform Concrete Base
- Shoulder Surfacing
- Temporary Pavement (8" Uniform Concrete - No Reinforcement)

PLANS PREPARED BY
CITY OF DETROIT
DEPARTMENT OF PUBLIC WORKS
CITY ENGINEER'S OFFICE
BUREAU OF HIGHWAYS AND EXPRESSWAYS

WICKEY 9/61
WICKEY / KENDER 9/61
WOLKAN 9/61
WICKEY 9/61
Allen E. [illegible] 9/61
H. K. [illegible] 9/61

SURFACING PLAN

FILE NO. USE NO. 350 STENCIL	STATE PROJECT	FEDERAL PROJECT	SHEET NO.
82251 F C16	82251	I-75-1(43)53	12

B.P.R. DIV. NO.	STATE	PROJ. NO.	FISCAL YEAR	SHEET NO.	TOTAL SHEETS
4	MICH.	F-75-1(43)53			
ROUTE	STATE PROJECT	COUNTY		SHEET NO.	TOTAL SHEETS
	82251	Wayne	City of Detroit	13	

B.P.R. DIV. NO.	STATE	PROJ. NO.	FISCAL YEAR	SHEET NO.	TOTAL SHEETS
4	MICH.				
ROUTE	STATE PROJECT	COUNTY		SHEET NO.	TOTAL SHEETS

PLANS PREPARED BY:
CITY OF DETROIT
DEPARTMENT OF PUBLIC WORKS
CITY ENGINEER

BUREAU OF HIGHWAYS, MICHIGAN DEPARTMENT OF STATE HIGHWAYS

WICKEY 9-46
KEENLOR 9-46
WOLAN 9-46
WICKEY 9-46
Alex S. Pappas 9-46
T. R. Keefe 9-46

HARPER AVE.

BEAUBIEN ST.

ST. ANTOINE ST.

HASTINGS ST.

ALLEY

BEAUBIEN EXIT RAMP FROM DETOUR

WESTBOUND EDSEL FORD DETOUR

BRIDGE X01 OF 82024B

610

605

NORTH SERVICE DRIVE

EXISTING HASTINGS PEDESTRIAN BRIDGE

FOOTING FOR BRIDGE S30

600

WESTBOUND ROADWAY

EASTBOUND ROADWAY

595

590

585

MEDBURY AVE.

FARM

CREST BAKERY

RUSSELL ST.

RUSSELL EXIT RAMP FROM DETOUR

℄ EDSEL FORD EXPRESSWAY

BEAUBIEN ENTRANCE RAMP

BRIDGE S21

SOUTH SERVICE DRIVE

ALLEY

ALLEY

ALLEY

RIVARD ST.

ALLEY

EASTBOUND EDSEL FORD DETOUR

BEAUBIEN ENTRANCE RAMP TO DETOUR

HENDRIE AVE.

HENDRIE AVE.

BEFORE CONSTRUCTION

HARPER AVE.

BEAUBIEN ST.

ST. ANTOINE ST.

HASTINGS ST.

ALLEY

BEAUBIEN EXIT RAMP FROM DETOUR

WESTBOUND EDSEL FORD DETOUR

BRIDGE S29

W'BD. TO S'BD. TURNING ROADWAY

BRIDGE S25

BRIDGE X01 OF 82024B

617+10

12'

6'

615

3° CURVE

610

612+50

605

NORTH SERVICE DRIVE

600

BRIDGE S27

BRIDGE S30

MEDBURY AVE.

WESTBOUND ROADWAY

595

590

585

RUSSELL EXIT RAMP

FARM

CREST BAKERY

RUSSELL ST.

℄ EDSEL FORD EXPRESSWAY

EASTBOUND ROADWAY

RUSSELL EXIT RAMP FROM DETOUR

BRIDGE S24

BEAUBIEN ENTRANCE RAMP

ALLEY

ALLEY

ALLEY

SOUTH SERVICE DRIVE

BRIDGE S21

EASTBOUND EDSEL FORD DETOUR

RIVARD ST.

ALLEY

BEAUBIEN ENTRANCE RAMP TO DETOUR

HENDRIE AVE.

HENDRIE AVE.

STAGE I

LEGEND

- New Pavement
- New Shoulder
- Timber Curb & Snow Fence
- Barricade

CONSTRUCTION - STAGE I

Remove the Hastings Pedestrian Bridge.
Construct Bridges S24, S27, and S29.
Construct portions of Bridges S25 and S30.
Construct alterations to the Edsel Ford Expressway.
Construct portions of the W'BD. to S'BD. Turning Roadway and the Russell Exit Ramp.
Complete construction of the Beaubien Exit Ramp.

Note:
For Stage II and Stage III
See Sh. #14.

PLAN FOR MAINTAINING TRAFFIC AND CONSTRUCTION SEQUENCE

FILE NO. USE NO. 350 STENCIL	82251 F C16	STATE PROJECT	FEDERAL PROJECT	SHEET NO.
		82251	F-75-1(43)53	13

B.P.R. DIV. NO.	STATE	PROJ. NO.	FISCAL YEAR	SHEET NO.	TOTAL SHEETS
4	MICH.	I-75-1(93)53			
ROUTE	STATE PROJECT	COUNTY	City	SHEET NO.	TOTAL SHEETS
	82251	Wayne	Detroit	12	

B.P.R. DIV. NO.	STATE	PROJ. NO.	FISCAL YEAR	SHEET NO.	TOTAL SHEETS
4	MICH.				
ROUTE	STATE PROJECT	COUNTY		SHEET NO.	TOTAL SHEETS

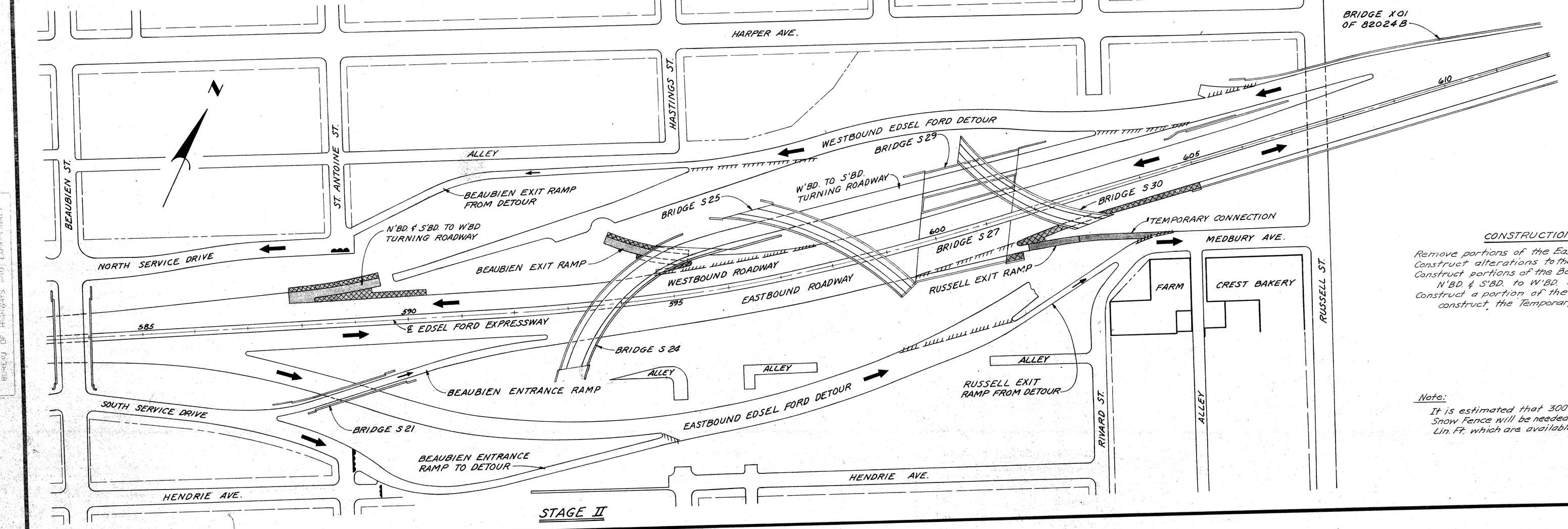

STAGE II

CONSTRUCTION - STAGE II

Remove portions of the Eastbound and Westbound Detours.
Construct alterations to the Edsel Ford Expressway.
Construct portions of the Beaubien Exit Ramp and the N'BD. & S'BD. to W'BD. Turning Roadway.
Construct a portion of the Russell Exit Ramp and construct the Temporary Russell Connection.

Note:
It is estimated that 300 Lin. Ft. of Timber Curb & Snow Fence will be needed in addition to the 1900 Lin. Ft. which are available at the Site from a Prior Contract.

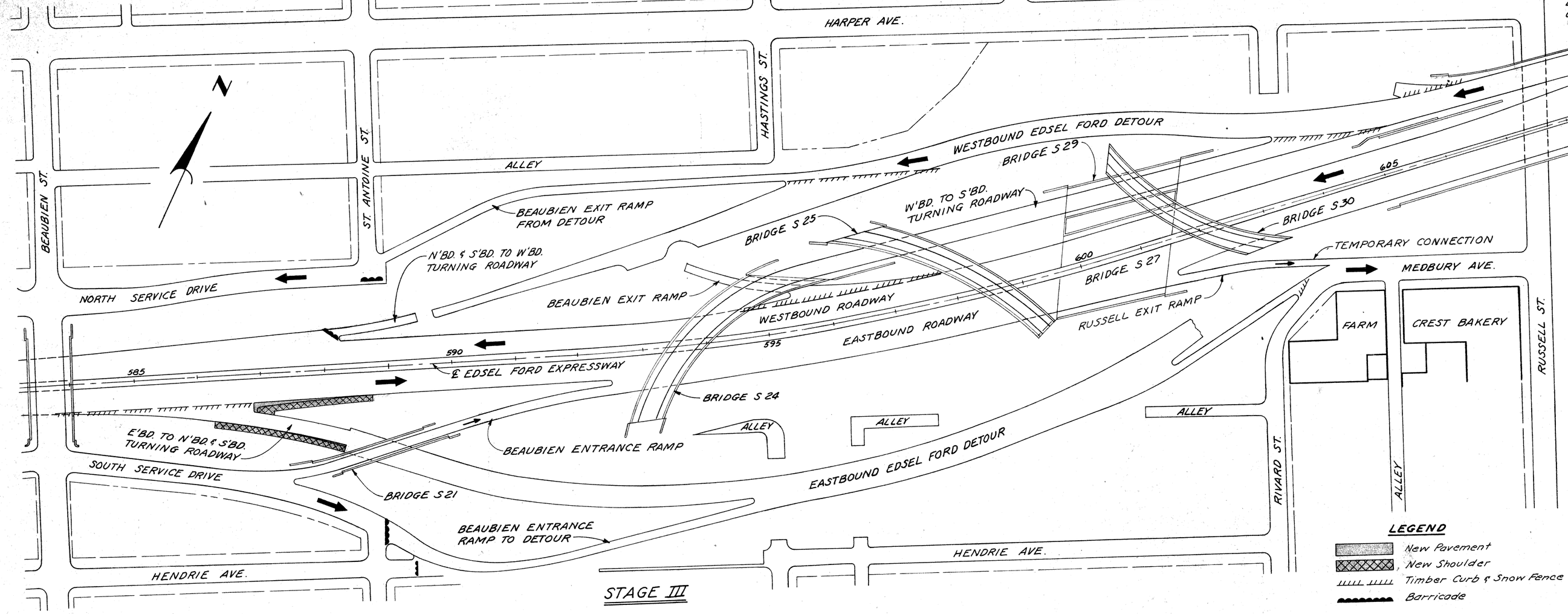

STAGE III

CONSTRUCTION STAGE III

Complete alterations to the Edsel Ford Expressway.
Construct a portion of the E'BD. to S'BD. Turning Roadway.

Notes:
For Stage I See Sh. # 13.

LEGEND
- New Pavement
- New Shoulder
- Timber Curb & Snow Fence
- Barricade

PLAN FOR MAINTAINING TRAFFIC AND CONSTRUCTION SEQUENCE

FILE NO. 1/8" NO. 350 STENCIL	82251 F C16	STATE PROJECT	FEDERAL PROJECT	SHEET NO.
		82251	I-75-1(93)53	14

PLATE PREPARED BY
CITY OF DETROIT
DEPARTMENT OF PUBLIC WORKS
CITY ENGINEER'S OFFICE
BUREAU OF HIGHWAYS

9/61 WICKEY
9/61 WICKEY / KENDLER
9/61 WOLKAN
9/61 WICKEY & Ryan
9/61 R.H. & Hale

B.P.R. DIV. NO.	STATE	PROJ. NO.	FISCAL YEAR	SHEET NO.	TOTAL SHEETS
4	MICH.	I-75-1(43)55			
ROUTE	STATE PROJECT	COUNTY	City	SHEET NO.	TOTAL SHEETS
	82251	Wayne	Detroit	15	

B.P.R. DIV. NO.	STATE	PROJ. NO.	FISCAL YEAR	SHEET NO.	TOTAL SHEETS
4	MICH.				
ROUTE	STATE PROJECT	COUNTY		SHEET NO.	TOTAL SHEETS

Notes:

1. The Maintenance Division of the Michigan State Highway Department will remove the Steel Beam Guard Rail.
2. The Field Engineer shall direct the Contractor to save desirable trees occuring within the Right of Way which do not interfere with Proposed Construction.
3. Removing portions of Traffic Sign Foundations are included in the Item Removing Masonry and Concrete listed on This sheet.

QUANTITIES

Removing Trees 8"-12"	+ Each	- Deleted by Rec. #37
Removing Sidewalk	327 Sq.Yds.	
Removing Curb & Gutter	174 Lin. Ft.	- 195 INCREASED by Rec #45
Removing Pavement	3,136 Sq. Yds.	- 3,053 DECREASED by Rec #45
Removing Portions of Steel Sheet Piling	885 Sq. Ft.	
Abandoning Inlets	2 Each	
Abandoning Catch Basins	10 Each	
Abandoning Manholes	2 Each	

EARTHWORK - For Abandoned Miscellaneous Structures

Removing Masonry and Concrete	15 Cu. Yds.	- 14 Decreased by Rec #46
Fill - Porous Material - Grade A (Compacted in Place)	20 Cu. Yds.	
Fill - Selected Excavated Material (to be obtained from Roadway Excavation Sh. # 30)	80 Cu. Yds.	

LEGEND

- Proposed Pavement
- Existing Foundation Wall
- Existing Basement
- Existing Concrete Slab
- Removing Curb & Gutter
- Removing Sidewalk
- Removing Pavement

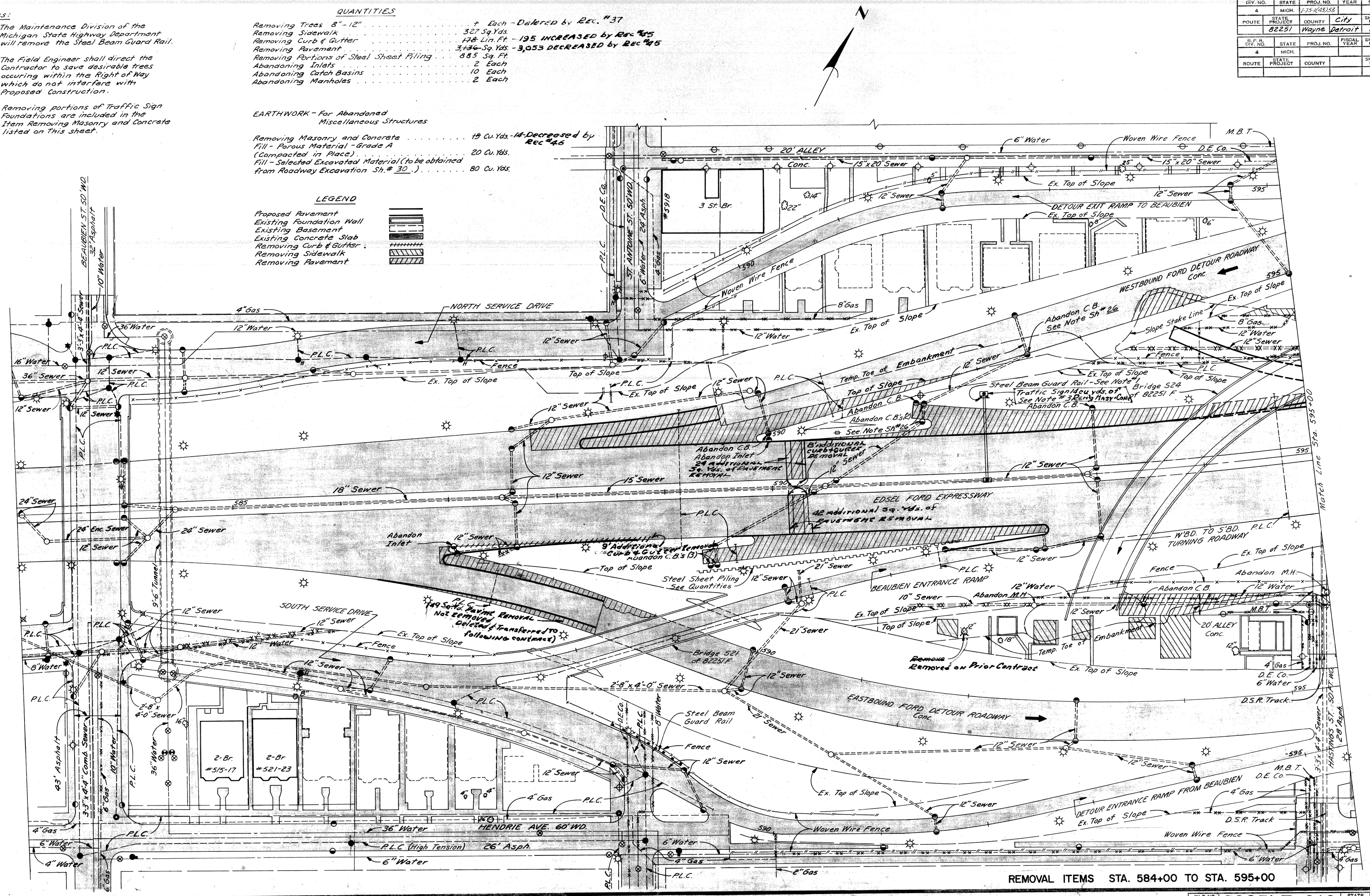

REMOVAL ITEMS STA. 584+00 TO STA. 595+00

FILE NO. USE NO. SEC SYENCIL	STATE PROJECT	FEDERAL PROJECT	SHEET NO.
82251 F C16	82251	I-75-1(43)55	15

PLANS PREPARED BY CITY OF DETROIT DEPARTMENT OF PUBLIC WORKS BUREAU OF HIGHWAYS AND TRAFFIC ENGINEERING

WICKEY	9/61	
KANWAS / SLATER	9/61	
SMITS	9/61	
KANWAS / SLATER	9/61	
Edson E. Carey	9/61	
H. H. Wickey	9/61	

B.P.R. DIV. NO.	STATE	PROJ. NO.	FISCAL YEAR	SHEET NO.	TOTAL SHEETS
4	MICH.	F75-1(65)53			
ROUTE	STATE PROJECT	COUNTY	City	SHEET NO.	TOTAL SHEETS
	82251	Wayne	Detroit	16	

B.P.R. DIV. NO.	STATE	PROJ. NO.	FISCAL YEAR	SHEET NO.	TOTAL SHEETS
4	MICH.				
ROUTE	STATE PROJECT	COUNTY		SHEET NO.	TOTAL SHEETS

PLANS PREPARED BY
CITY OF DETROIT
DEPARTMENT OF PUBLIC WORKS
OFF. ENGINEER IN CHARGE
BUREAU OF HIGHWAYS AND EXPRESSWAYS

HICKEY	EDWARDS	9/61
SMITS	EDWARDS	9/61
CONLEY	KAWAS	9/61
Allen E. Hogan		9/61
	A. A. Kuebler	9/61

ENGINEER
APPROVED
CITY ENGINEER
APPROVED
CITY ENGINEER
RECOMMENDED
CITY ENGINEER
APPROVED
CITY ENGINEER

D.S.R. Track
13 Sq. Yd. D.S.R. TRACK REMOVAL
9 Sq Yd PAVEMENT REMOVAL
22 Sq. Yd. PAVEMENT REPLACEMENT
P.L.C.
D.E. Co. 4" Gas
M.B.T.
8" Water
33"x 4'-4" Sewer
HASTINGS ST. 30 FT. WD. 28" Asph.
15"x20" Sewer
10" Water
Woven Wire Fence
15"x 20" Sewer
Top of Ex. Slope
12" Sewer
WESTBOUND FORD DETOUR ROADWAY Conc.
4" Gas
6" Water
Slope Stake Line
15"x 20" Sewer
600
P.L.C.
S'BD. TO E'BD. TURNING ROADWAY
Bridge S30 of 82251F
Bridge S29 of 82251F
10" Remove
12" Water
Temp. Toe of Embankment
371 Cu. Yd. Earth Excavation
18 Cu. Yd. Masonry & Conc'te Rem'd.
389 Cu. Yd. Pay Quantities
Auth.-1012
Bridge S25 of 82251F
W'BD. to S'BD. TURNING ROADWAY
18" Remove
Fence
20 Cu. Yd. MASONRY & CONCRETE REMOVAL
Bridge S24 of 8225IF
BEAUBIEN EXIT RAMP
Remove C.B.
EX. HASTINGS ST. PEDESTRIAN BRIDGE
12" Sewer
2'-0" CURB & GUTTER REMOVAL
4" CURB & GUTTER REMOVAL
15" Sewer
Abandon M.H. (2)
18" Sewer
Match Line Sta. 595+00
7'x 7' Conc. Cap
Steel Beam Guard Rail
+20.5 Remove C.B.
Traffic Sign See Note #3
N'BD. TO W'BD. TURNING ROADWAY
Temp. Toe of Embankment
12" Water
20' ALLEY Conc.
4" Gas
12" Sewer
18' ALLEY Conc.
EASTBOUND FORD DETOUR ROADWAY Conc.
597
1000 Gal. Tank
HENDRIE 60 FT. WD. 26" Asphalt
10" Sewer
6" Water
D.E. Co.
18' ALLEY Conc.
Abandon C.B.
605
EDSEL FORD EXPRESSWAY
Abandon Inlet
Abandon C.B.
+52.75
Two Cable Guard Rail
Remove Steel Sheet Piling See Quantities
RUSSELL EXIT RAMP
Steel Beam Guard Rail See Note #2
Bridge S27 of 82251F
DETOUR EXIT RAMP TO RUSSELL
RUSSELL ST. 60 FT. WD. 36' Asphalt
Sign
MEDBURY AVE. 60 FT. WD. 36' Asphalt
15" Sewer
6" Gas
Gas M.H.
Guy Pole
#1336
THIS CURB NOT INSTALLED ON PREVIOUS CONTRACT
#5845
Revised by Recommendation No. 16
Farm Crest Bakery
20' ALLEY (VAC.) Asph.
Richard St. 50 FT. WD. 32' Asphalt
Woven Wire Fence
1000 Gal. Tank
4" Gas
D.E. Co.
Traffic Sign
Remove
Abandon C.B.
Two Cable Guard Rail
Abandon C.B.
Abandon Inlet
Abandon C.B.
Fence
Remove Steel Sheet Piling See Quantities
Sign
RUSSELL ST. 60 FT. WD. 36' Asphalt
MEDBURY AVE. 60 FT. WD. 36' Asphalt
Guy Pole
#1336
THIS CURB NOT INSTALLED ON PREVIOUS CONTRACT
#5845
Revised by Recommendation No. 16
Farm Crest Bakery
20' ALLEY (VAC.) Asph.
Richard St. 50 FT. WD. 32' Asphalt
Woven Wire Fence
1000 Gal. Tank
D.E. Co.
18' ALLEY Conc.

QUANTITIES

Removing Trees 8"-12"	1 Ea.
Removing Trees 13"-24"	1 Ea.
Abandoning Inlets	1 Ea.
Abandoning Catch Basins	5 Ea.
Abandoning Manholes	2 Ea.
Removing Catch Basins	2 Ea.
Removing Curb & Gutter Dec. by Rec. #46 10 ~~130~~	Lin. Ft.
Removing Sidewalk	123 Sq. Yds.
Removing Pavement Dec. by Rec. #46-10,371 ~~10,547~~	Sq. Yds.
Replacing Pavement Inc. by Auth. 1012	224 Sq. Yds.
Removing D.S.R. Track Strip Inc. Rec. #46	13 4 Sq. Yds.
Removing Portions of Steel Sheet Piling	1,950 Sq. Yds.

EARTHWORK – For Abandoned Miscellaneous Structures 52
Removing Masonry and Concrete Inc. by Rec. #46 ~~15~~ Cu. Yds. *
Fill – Porous Material – Grade A (Compacted in Place) Inc. Auth. 1012 . . 519 ~~130~~ Cu. Yds. *
Fill – Selected Excavated Material (To be obtained from Roadway Excavation Sh. # 30) . . 16 Cu. Yds.

* Quantities include Masonry and Concrete Removal and Porous Material-Grade A Fill for abandoning Existing Hastings Street Sewer.

LEGEND

- Removing Curb & Gutter
- Removing Sidewalk
- Removing Pavement
- Replacing Pavement
- Proposed Pavement
- Existing Foundation Wall
- Existing Basement
- Existing Concrete Slab

Revised by Recommendation No. 16

Notes:

1. The Maintenance Division of the Michigan State Highway Dept. will remove the Steel Beam Guard Rail.
2. The Field Engineer shall direct the Contractor to save desirable Trees occuring within the Right of Way which do not interfere with Proposed Construction.
3. Removing portions of Traffic Sign Foundations are included in the Item Removing Masonry and Concrete listed on this sheet.

REMOVAL ITEMS STA. 595+00 TO STA. 605+07.50

FILE NO. U.S. NO. 350 STENCIL	82251 F C16	STATE PROJECT	FEDERAL PROJECT	SHEET NO.
		82251	F-75-1(65)53	16

B.P.R. DIV. NO.	STATE	PROJ. NO.	FISCAL YEAR	SHEET NO.	TOTAL SHEETS
4	MICH.	I-75-1(83)153			
ROUTE	STATE PROJECT	COUNTY	City	SHEET NO.	TOTAL SHEETS
	82251	Wayne	Detroit	17	

B.P.R. DIV. NO.	STATE	PROJ. NO.	FISCAL YEAR	SHEET NO.	TOTAL SHEETS
4	MICH.				
ROUTE	STATE PROJECT	COUNTY		SHEET NO.	TOTAL SHEETS

PLANS PREPARED BY
CITY OF DETROIT
DEPARTMENT OF PUBLIC WORKS
CITY ENGINEERS OFFICE
BUREAU OF HIGHWAYS AND EXPRESSWAYS

RICKEY	9/16	
KOSKI / COMLY	9/16	
WOLNIAK	9/16	
COMLY (Added 2nd Stage)	9/16	
CONSULT		

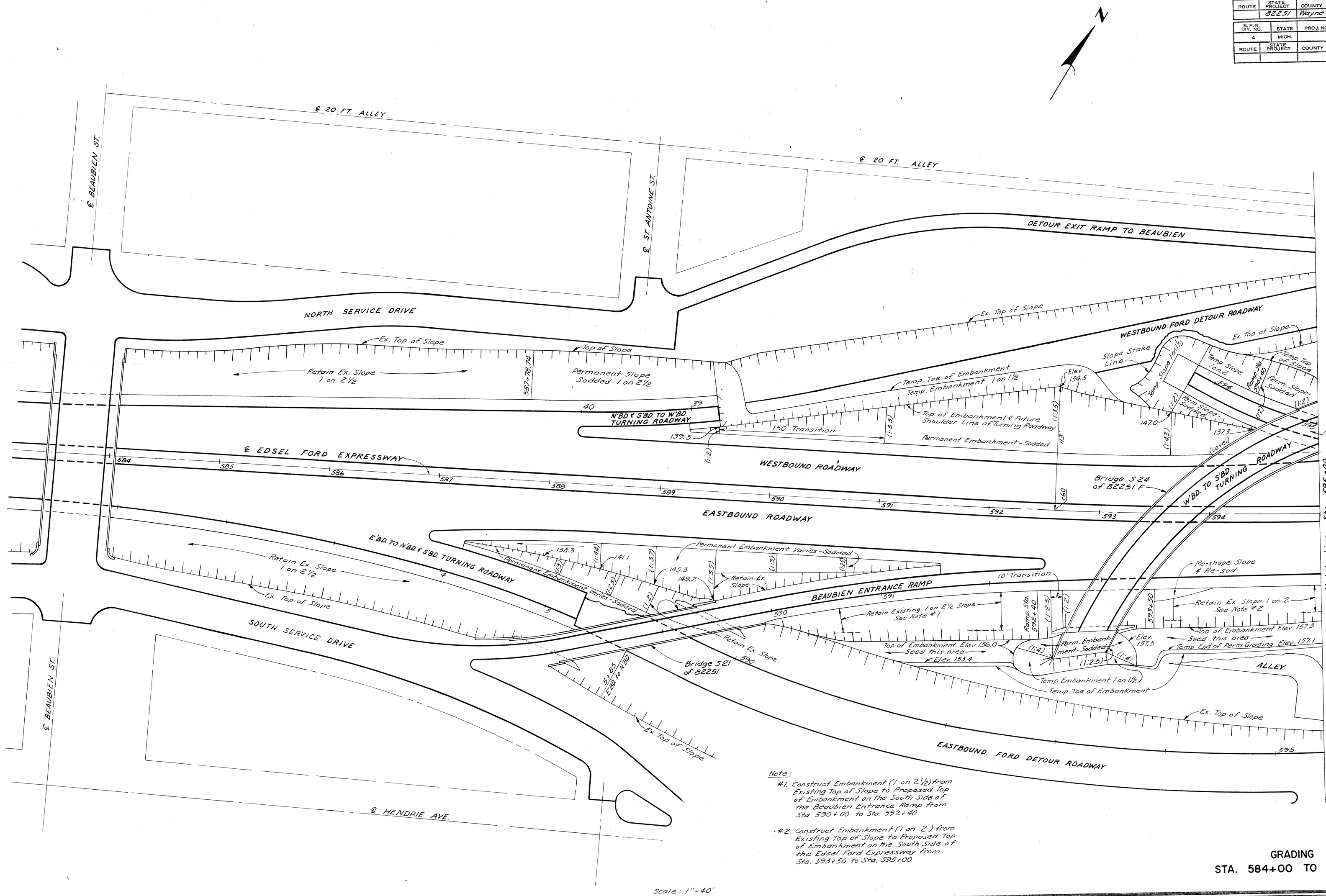

Note:

#1. Construct Embankment (1 on 2 1/2) from Existing Top of Slope to Proposed Top of Embankment on the South Side of the Beaubien Entrance Ramp from Sta. 590+00 to Sta. 592+40

#2. Construct Embankment (1 on 2) from Existing Top of Slope to Proposed Top of Embankment on the South Side of the Edsel Ford Expressway from Sta. 593+50 to Sta. 595+00

Scale: 1" = 40'

GRADING PLAN
STA. 584+00 TO STA. 595+00

FILE NO. USE NO. 350 STENCIL	STATE PROJECT	FEDERAL PROJECT	SHEET NO.
82251 F C16	82251	I-75-1(83)153	17

B.P.R. DIV. NO.	STATE	PROJ. NO.	FISCAL YEAR	SHEET NO.	TOTAL SHEETS
4	MICH.	I-75-1(43)53			
ROUTE	STATE PROJECT	COUNTY	City	SHEET NO.	TOTAL SHEETS
	82251	Wayne	Detroit	18	

B.P.R. DIV. NO.	STATE	PROJ. NO.	FISCAL YEAR	SHEET NO.	TOTAL SHEETS
4	MICH.				
ROUTE	STATE PROJECT	COUNTY		SHEET NO.	TOTAL SHEETS

PLANS PREPARED BY
CITY OF DETROIT
DEPARTMENT OF PUBLIC WORKS
CITY ENGINEER, HIGHWAYS

SUBMITTED AND RECOMMENDED FOR APPROVAL
DIRECTOR OF HIGHWAYS AND TRAFFIC ENGINEER

WICKEY	9/61	
KOSKI / COMLY	9/61	
KOLKAN	9/61	
KOSKI	9/61	
DEWITT PAYNE	9/61	
A.A. FRANK	9/61	

E. HASTINGS ST.

DETOUR EXIT RAMP TO BEAUBIEN

WESTBOUND EDSEL FORD DETOUR

Slope Stake Line

Ex. Top of Slope

Perm. Embankment 1 on 2½ - Sodded

Temp. Toe of Embankment

Seed this Area

Temp. End of Perm. Grading

Perm. Slope 1 on 2 Sodded

Future Shoulder Line

Bottom of Slope

Bridge S 29 of 82251 F

Embankment 1 on 1½

Embankment 1 on 2

70' Transition

Perm. Slope 1 on 2½ - Sodded

W'BD. TO S'BD. TURNING ROADWAY

Perm. Slope Varies - Sodded (1:35) (1:4)

WESTBOUND ROADWAY

Perm. Embankment Sodded - 1 on 2

Perm. Slope Varies - Sodded (1 on 2 to Level)

(Level)

N'BD. TO W'BD. TURNING ROADWAY

S'BD. TO E'BD. TURNING ROADWAY

Bridge S 30 of 82251 F

Bridge X 11 of 82251 F

EASTBOUND ROADWAY

Sodded 1 on 2

BEAUBIEN EXIT RAMP

E. EDSEL FORD EXPRESSWAY

Perm. Embankment Varies - Sodded (1:44) (1:3) (1:2)

Slope Stake Line See Note #2

Bridge S 25 of 82251 F

Bridge S 27 of 82251 F

RUSSELL EXIT RAMP

Future Shoulder Line

Perm. Slope 1 on 2-Sodded

E. MEDBURY AVE.

Retain Existing Slope 1 on 2 See Note #1

Perm. Slope Sodded - 1 on 2

Top of Embankment Elev. 157.5

Top of Embankment Elev. 157.5

Elev. 157.1

Temp. End of Perm. Grading Elev. 157.1

Temp. Toe of Embankment

Seed this Area

Perm. Slope Varies - Sodded

1 on 2 - 1 on 2½

Bottom of Slope

Ex. Top of Slope

Slope Stake Line See Note #2

Ditch

DETOUR EXIT RAMP TO RUSSELL

FARM CREST BAKERY

ALLEY

EASTBOUND EDSEL FORD DETOUR

E. RIVARD ST.

Match Line Sta. 595+00

W'BD. TO N'BD. TURNING ROADWAY

Bridge X01 of 82024 B

Note:

#1. Construct Embankment (1 on 2.) from Existing Top of Slope to Proposed Top of Embankment on the South Side of the Edsel Ford Expressway from Sta. 595+00 to Sta. 597+13.

#2. Existing embankment along the Russell Exit Ramps will be cut on a 1 on 2 slope

Scale: 1"=40'

GRADING PLAN
STA. 595+00 TO STA. 605+07.50

FILE NO. USE NO. 230 STENCIL	STATE PROJECT	FEDERAL PROJECT	SHEET NO.
82251 F C16	82251	I-75-1(43)53	18

C.B.M. #120 Elev. 156.138 Arrow on Hydrant. S.E. Corner St. Antoine St. and Hendrie Ave.

C.B.M. #121 Elev. 155.928 Arrow on Hydrant. S. side of Hendrie Ave., 283' E. of C.B.M. #120

C.B.M. #136 Elev. 155.946 Arrow on Hydrant. S.E. Corner Beaubien St. and Hendrie Ave.

C.B.M. #137 Elev. 156.490 Arrow on Hydrant. S.W. Corner Beabien St. and Ford S. Serv. Dr.

C.B.M. #138 Elev. 155.461 Arrow on Hydrant. N.W. Corner Beaubien St. and Ford N. Serv. Dr.

B.P.R. DIV. NO.	STATE	PROJ. NO.	FISCAL YEAR	SHEET NO.	TOTAL SHEETS
4	MICH.	I-75-1(193)53			
ROUTE	STATE PROJECT	COUNTY	City	SHEET NO	TOTAL SHEETS
	82251	Wayne	Detroit	19	

B.P.R. DIV. NO.	STATE	PROJ. NO.	FISCAL YEAR	SHEET NO.	TOTAL SHEETS
4	MICH.				
ROUTE	STATE PROJECT	COUNTY		SHEET NO.	TOTAL SHEETS

PLANS PREPARED BY
CITY OF DETROIT
DEPARTMENT OF PUBLIC WORKS
CITY ENGINEERS OFFICE
BUREAU OF HIGHWAYS AND EXPRESSWAYS

CURVE DATA NORTH SERVICE DRIVE
South Edge

Δ = 10°-00'-00"
D = 9°-18'-25.71"
R = 615.61'
T = 53.86'
L = 107.44'
E = 2.35'
P.C. = 584+04.33
P.I. = 584+58.19
P.T. = 585+11.78

CURVE 8 SW

Δ = 10°-51'-01"
D = 5°-00'-00"
R = 1145.92'
T = 108.83'
L = 217.01'
E = 5.16'
P.C. = 37+87.53
P.I. = 38+96.36
P.T. = 40+04.54

Curve 9 SW

Δ = 2°-37'-01"
D = 3°-00'-00"
R = 1909.86'
T = 43.62'
L = 87.23'
E = 0.50'
P.C. = 44+25.11
P.I. = 44+68.73
P.T. = 45+12.34

CURVE DATA BEAUBIEN EXIT RAMP
South Edge

Δ = 43°-08'-14"
D = 18°-20'-04.74"
R = 312.50'
T = 123.53'
L = 235.28'
E = 23.53'
P.C. = 590+36.14
P.I. = 591+59.67
P.T. = 592+71.41

Δ = 20°-33'-21"
D = 33°-12'-53.80"
R = 172.50'
T = 31.28'
L = 61.89'
E = 2.81'
P.C. = 588+44.62
P.I. = 588+75.90
P.T. = 589+06.51

CURVE DATA EDSEL FORD
Main Roadway

Δ = 13°-21'-50"
D = 1°-30'-00"
R = 3819.83'
T = 447.51'
L = 890.93'
E = 26.13'
P.C. = 591+60.99
P.I. = 596+08.50
P.T. = 600+51.92

CURVE DATA BEAUBIEN ENTRANCE RAMP
North Edge

Δ = 23°-57'-51"
D = 14°-30'-00"
R = 395.14'
T = 83.86'
L = 165.27'
E = 8.80'
P.C. = 586+41.66
P.I. = 587+25.52
P.T. = 588+06.93

Δ = 9°-04'-06.41"
D = 3°-45'-00"
R = 1527.89'
T = 121.17'
L = 241.83'
E = 4.80'
P.C. = 589+99.91
P.I. = 591+21.08
P.T. = 592+41.74

CURVE DATA SOUTH SERVICE DRIVE
North Edge

Δ = 39°-07'-30.68"
D = 6°-15'-00"
R = 916.73'
T = 325.76'
L = 626.00'
E = 56.16'
P.C. = 160+52.01
P.I. = 163+77.77
P.T. = 166+78.02

North Edge

Δ = 35°-46'-04.92"
D = 95°-29'-34.68"
R = 60.00'
T = 19.36'
L = 37.46'
E = 3.05'
P.C. = 162+30.36 (True Sta.)
P.I. = 162+49.72
P.T. = 162+67.82 (P.R.C.)

North Edge

Δ = 35°-56'-28"
D = 286°-28'-44.04"
R = 20.00'
T = 6.49'
L = 12.55'
E = 1.03'
P.C. = 162+67.82 (P.R.C)
P.I. = 162+74.30
P.T. = 162+80.36

North Edge

Δ = 12°-02'-58.48"
D = 23°-52'-23.67"
R = 240.00'
T = 25.33'
L = 50.47'
E = 1.33'
P.C. = 163+69.91
P.I. = 163+95.24
P.T. = 164+20.38 (True Sta.)

Curve 1 EN & ES

Δ = 12°-47'-06"
D = 3°-07'-30"
R = 1833.47'
T = 205.41'
L = 409.12'
E = 11.47'
P.C. = 0+00.00
P.I. = 2+05.41
P.T. = 4+09.12 (P.C.C)

Curve 2 EN

Δ = 6°-02'-32.26"
D = 5°-00'-45.64"
R = 1143.02'
T = 60.33'
L = 120.54'
E = 1.59'
P.C. = 4+09.12 (P.C.C.)
P.I. = 4+69.45
P.T. = 5+29.66 = P.C. 3 EN

Curve 3 EN

Δ = 17°-08'-03.74"
D = 4°-57'-45.91"
R = 1154.52'
T = 173.93'
L = 345.26'
E = 13.03'
P.C. = 5+29.66 = P.I. 2 EN
P.I. = 7+03.59
P.T. = 8+74.92

Curve 2 ES

Δ = 42°-57'-42"
D = 6°-36'-17.91"
R = 867.46'
T = 341.37'
L = 650.44'
E = 64.75'
P.C. = 4+09.12 (P.C.C.)
P.I. = 7+50.49
P.T. = 10+59.56

Mistake Lane at Edsel Ford

Δ = 5°-14'-24"
D = 3°-00'-00"
R = 1909.86'
T = 87.39'
L = 174.67'
E = 2.00'
P.C. = 586+98.07
P.I. = 587+85.46
P.T. = 588+72.74 (True Sta.)

Scale 1" = 40'

Note:
Survey Stationing shown in brackets thus, ( ).
Bench Marks are on City of Detroit Datum.

ALIGNMENT OF EDSEL FORD EXPRESSWAY STA. 582+00 TO 592+00

FILE NO. DSE NO. 350 STENCIL	82251 F C16	STATE PROJECT	FEDERAL PROJECT	SHEET NO.
		82251	I-75-1(193)53	19

B.P.R. DIV. NO.	STATE	PROJ. NO.	FISCAL YEAR	SHEET NO.	TOTAL SHEETS
4	MICH.	I-75-1(43)53			
ROUTE	STATE PROJECT	COUNTY	City	SHEET NO.	TOTAL SHEETS
	82251	Wayne	Detroit	20	

B.P.R. DIV. NO.	STATE	PROJ. NO.	FISCAL YEAR	SHEET NO.	TOTAL SHEETS
4	MICH.				
ROUTE	STATE PROJECT	COUNTY		SHEET NO.	TOTAL SHEETS

PLANS PREPARED BY
CITY OF DETROIT
DEPARTMENT OF PUBLIC WORKS
CITY ENGINEERS OFFICE
BUREAU OF HIGHWAYS AND EXPRESSWAYS

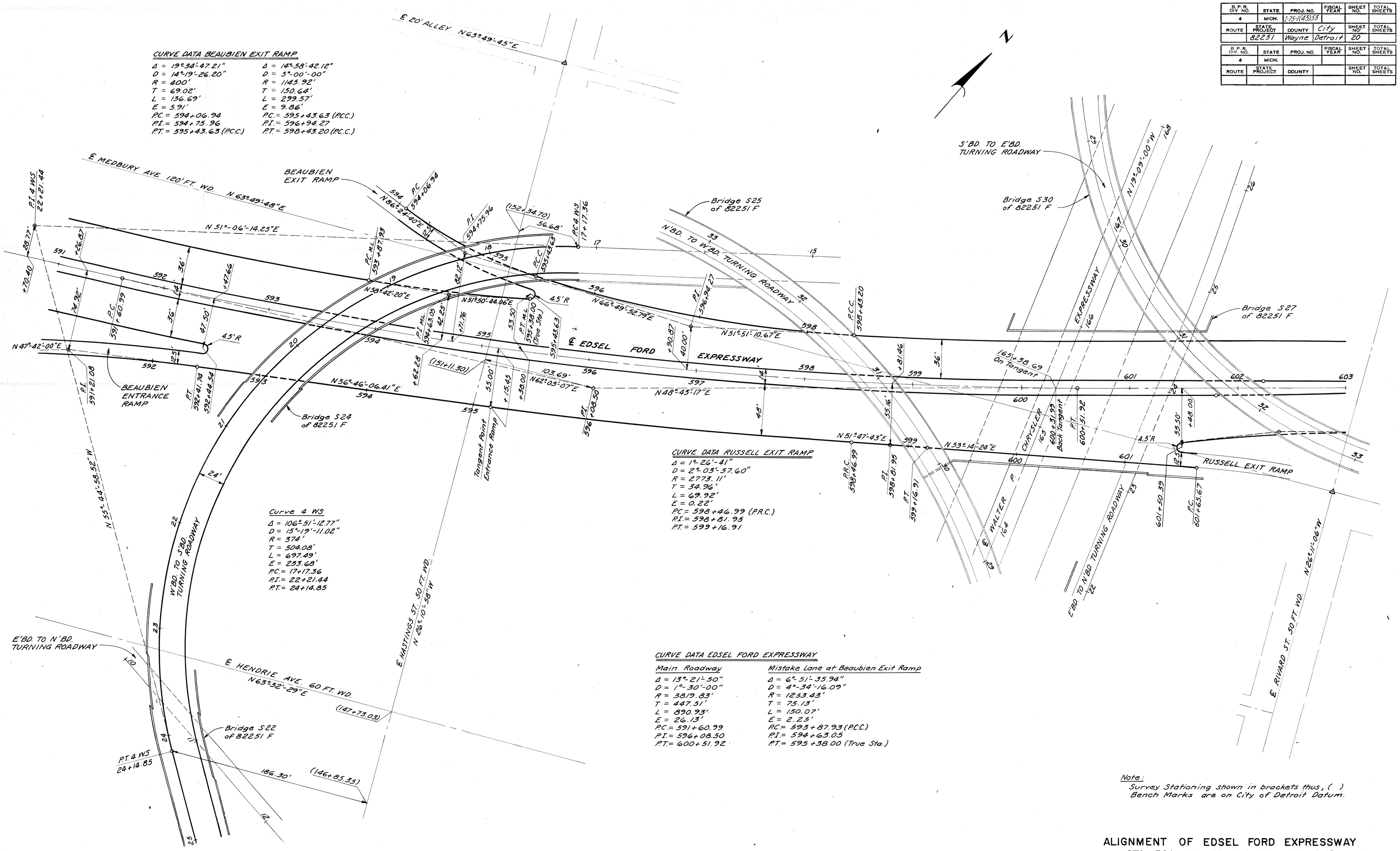

CURVE DATA BEAUBIEN EXIT RAMP

Δ = 19°34'-47.21"	Δ = 14°58'-42.12"
D = 14°-19'-26.20"	D = 5°-00'-00"
R = 400'	R = 1145.92'
T = 69.02'	T = 150.64'
L = 136.69'	L = 299.57'
E = 5.91'	E = 9.86'
P.C. = 594+06.94	P.C. = 595+43.63 (P.C.C.)
P.I. = 594+75.96	P.I. = 596+94.27
P.T. = 595+43.63 (P.C.C.)	P.T. = 598+43.20 (P.C.C.)

CURVE DATA RUSSELL EXIT RAMP

Δ = 1°-26'-41"
D = 2°-03'-57.60"
R = 2773.11'
T = 34.96'
L = 69.92'
E = 0.22'
P.C. = 598+46.99 (P.R.C.)
P.I. = 598+81.95
P.T. = 599+16.91

CURVE DATA EDSEL FORD EXPRESSWAY

Main Roadway	Mistake Lane at Beaubien Exit Ramp
Δ = 13°-21'-50"	Δ = 6°-51'-35.94"
D = 1°-30'-00"	D = 4°-34'-16.09"
R = 3819.83'	R = 1253.43'
T = 447.51'	T = 75.13'
L = 890.93'	L = 150.07'
E = 26.13'	E = 2.25'
P.C. = 591+60.99	P.C. = 593+87.93 (P.C.C.)
P.I. = 596+08.50	P.I. = 594+63.05
P.T. = 600+51.92	P.T. = 595+38.00 (True Sta.)

Note:
Survey Stationing shown in brackets thus, ( )
Bench Marks are on City of Detroit Datum.

C.B.M. #121 Elev. 155.928 Arrow on Hydrant
S. side of Hendrie Ave. 283' E. of C.B.M. #120.

P.B.M. #41-250 Elev. 152.672 City of Detroit
Monument N.E. Corner Hastings St. and Hendrie Ave.

C.B.M. #122 Elev. 156.206 Arrow on Hydrant
S. side of Hendrie Ave. 330' E. of P.B.M. #41-250.

Scale: 1"=40'

ALIGNMENT OF EDSEL FORD EXPRESSWAY STA. 591+00 TO STA. 601+00 AND WESTBOUND FORD TO SOUTHBOUND CHRYSLER TURNING ROADWAY

FILE NO. USE NO. 350 STENCIL	STATE PROJECT	FEDERAL PROJECT	SHEET NO.
82251 F C16	82251	I-75-1(43)53	20

B.P.R. DIV. NO.	STATE	PROJ. NO.	FISCAL YEAR	SHEET NO.	TOTAL SHEETS
4	MICH.	I-75-1(83)53			
ROUTE	STATE PROJECT	COUNTY	City	SHEET NO.	TOTAL SHEETS
	82251	Wayne	Detroit	21	

B.P.R. DIV. NO.	STATE	PROJ. NO.	FISCAL YEAR	SHEET NO.	TOTAL SHEETS
4	MICH.				
ROUTE	STATE PROJECT	COUNTY		SHEET NO.	TOTAL SHEETS

C.B.M. #144 Elev. 155.964 Arrow on Hydrant
N.W. Corner Harper Ave. and Rivard St.

C.B.M. #145 Elev. 155.869 Arrow on Hydrant
N. side of Harper Ave., 255' E. of C.B.M. #144

C.B.M. #146 Elev. 155.610 Arrow on Hydrant
N.E. Corner Harper Ave. and Russell St.

C.B.M. #147 Elev. 155.988 Arrow on Hydrant
N.E. Corner Medbury Ave and Russell St.

N

P.T. N & S (155+37.68)

N 26°-12'-56" W

(34+23.99)

℄ HARPER AVE. 80 FT. WD. N 63°-38'-09" E

(155+43.86 North) = (155+36.18 South)

SQUARE D

SQUARE D

℄ RIVARD ST. 50 FT. WD.

(38+43.86)

CURVE DATA EDSEL FORD EXPRESSWAY

Median Transition Westbound	Median Transition Eastbound	Mistake Lane at Russell Exit Ramp
Δ = 1°-24'-58.08"	Δ = 2°-00'-10"	Δ = 4°-54'-37.04"
D = 1°-00'-00"	D = 2°-00'-00"	D = 2°-42'-09.81"
R = 5729.58'	R = 2864.79	R = 2119.93'
T = 70.81'	T = 50.08'	T = 90.90'
L = 141.61'	L = 100.14'	L = 181.68'
E = 0.44'	E = 0.44'	E = 1.95'
		P.C. = 601+47.14
		P.I. = 602+38.04
		P.T. = 603+28.82 (True Sta.) P.C.C.

N 49°-56'-00.09" E

W'BD. TO N'BD & S'BD. TURNING ROADWAY

Curve 1 WN & WS

Δ = 5°-17'-54.43"
D = 6°-56'-13.81"
R = 825.92'
T = 38.22'
L = 76.38'
E = 0.88'
P.C. = 0+00.00
P.I. = 0+38.22
P.T. = 0+76.38

Curve 2 WN & WS

Δ = 4°-05'-11.34"
D = 3°-18'-25.55"
R = 1732.51'
T = 61.81'
L = 123.57'
E = 1.10'
P.C. = 3+88.05
P.I. = 4+49.86
P.T. = 5+11.62

P.T. 2 WN & WS 5+11.62

P.I. 2 WN & WS 4+49.86

P.C. 2 WN & WS 3+88.05

P.T. 1 WN & WS 0+76.38

P.I. 1 WN & WS 0+38.22

P.C. 1 WN & WS 0+00.00

S'BD TO E'BD. TURNING ROADWAY

Bridge S30 of 82251 F

Bridge S27 of 82251 F

Bridge X01 of 82024B C4

N 54°-01'-11.43" E

600-31.99 Back Tangent

P.T. 600+51.92

EXPRESSWAY

Median Transition Westbound
1° reversed curves

Median Transition Eastbound
2° reversed curves

℄ EDSEL FORD EXPRESSWAY

N 48°-43'-17" E

165+38.69 On Tangent

CHRYSLER 165

℄ WALTER P. N 19°-09'-00" W

E'BD TO N'BD TURNING ROADWAY

RUSSELL EXIT RAMP

N 53°-14'-24" E

N 63°-49'-46" E

N 42°-46'-28" E

N 47°-41'-05" E

N 37°-54'-22.46" E

N 38°-19'-16" E

N 63°-48'-42" E

Tangent Point 37+46.47 SE
34+92.53 NE
35+28.92
35+38.31

P.T. 5 NE 39+69.46

Bridge X01 of 82024B C5

N'BD. TO E'BD. TURNING ROADWAY

N 15°-30'-44.03" E

℄ MEDBURY AVE. 60 FT. WD. N 63°-49'-46" E

℄ 20' ALLEY N 26°-11'-48" W

℄ RUSSELL ST. 60 FT. WD. N 26°-11'-18" W

FARM

CREST BAKERY

AMERICAN CAR & FOUNDRY CO.

CURVE DATA EAST SERVICE DRIVE

Δ = 41°-51'-50.03"	Δ = 48°-09'-01.97"
D = 63°-39'-43.12"	D = 91°-40'-23.69"
R = 90'	R = 62.50'
T = 34.43'	T = 27.93'
L = 65.76'	L = 52.52'
E = 6.36'	E = 5.96'
P.C. = 149+95.18	P.C. = 151+14.95
P.I. = 150+29.61	P.I. = 151+42.88
P.T. = 150+60.94	P.T. = 151+67.48

CURVE DATA RUSSELL EXIT RAMP

	North Edge	At Medbury	North Edge
Δ = 10°-35'-22"	Δ = 25°-30'-30"	Δ = 25°-30'-30"	Δ = 25°-29'-26"
D = 6°-00'-00"	D = 28°-38'-52.40"	D = 22°-55'-05.92"	D = 24°-54'-40.35"
R = 954.93'	R = 200'	R = 250'	R = 230'
T = 88.50'	T = 45.27'	T = 56.59'	T = 52.02'
L = 176.49'	L = 89.04'	L = 111.30'	L = 102.33'
E = 4.09'	E = 5.06'	E = 6.32'	E = 5.81'
P.C. = 601+65.67	P.C. = 604+52.50	P.C. = 151+93.94 (℄ Sta.)	P.C. = 606+26.91
P.I. = 602+54.17	P.I. = 604+97.77	P.I. = 152+50.52 (℄ Sta.)	P.I. = 606+78.93
P.T. = 603+42.16	P.T. = 605+41.54	P.T. = 153+01.67 (℄ Sta.)	P.T. = 607+29.24
		P.T. = 605+21.71 (Ramp Sta.)	

Curve 5 NE

Δ = 10°-48'-54.54"
D = 1°-14'-00"
R = 4646.60'
T = 439.76'
L = 876.90'
E = 20.77'
P.C. = 30+92.55 = P.T. 4 NE
P.I. = 35+32.31
P.T. = 39+69.46

Note:
Survey Stationing shown in brackets thus, ( ).
Bench Marks are on City of Detroit Datum.

Scale : 1" = 40'

ALIGNMENT OF EDSEL FORD EXPRESSWAY STA. 600+00 TO STA. 613+00

FILE NO. USBR NO. 330 SPENCE	82251 F C16	STATE PROJECT	FEDERAL PROJECT	SHEET NO.
		82251	I-75-1(83)53	21

PLANS PREPARED BY
CITY OF DETROIT
DEPARTMENT OF PUBLIC WORKS
CITY ENGINEER'S OFFICE
HIGHWAYS AND EXPRESSWAYS

RIGHT-OF-WAY

10

PLANS PREPARED BY
CITY OF DETROIT
DEPARTMENT OF PUBLIC WORKS
CITY ENGINEERS OFFICE
BUREAU OF HIGHWAYS AND EXPRESSWAYS

C.B.M. # 143. Elev. 155.728 Arrow on Hydrant N.W. Corner Harper Ave. and Mansur Ave.

C.B.M. # 144 Elev. 155.964 Arrow on Hydrant N.W. Corner Harper Ave. and Rivard St.

C.B.M. # 151 Elev. 156.621 Arrow on Hydrant N.W. Corner Rivard St. and Piquette Ave.

C.B.M. # 152 Elev. 155.134 Arrow on Hydrant S.E. Corner Rivard St. and Piquette Ave

B.P.R. DIV. NO.	STATE	PROJ. NO.	FISCAL YEAR	SHEET NO.	TOTAL SHEETS
4	MICH.	I-75-1(183)33			
ROUTE	STATE PROJECT	COUNTY	City	SHEET NO.	TOTAL SHEETS
	82251	Wayne	Detroit	22	

B.P.R. DIV. NO.	STATE	PROJ. NO.	FISCAL YEAR	SHEET NO.	TOTAL SHEETS
4	MICH.				
ROUTE	STATE PROJECT	COUNTY		SHEET NO.	TOTAL SHEETS

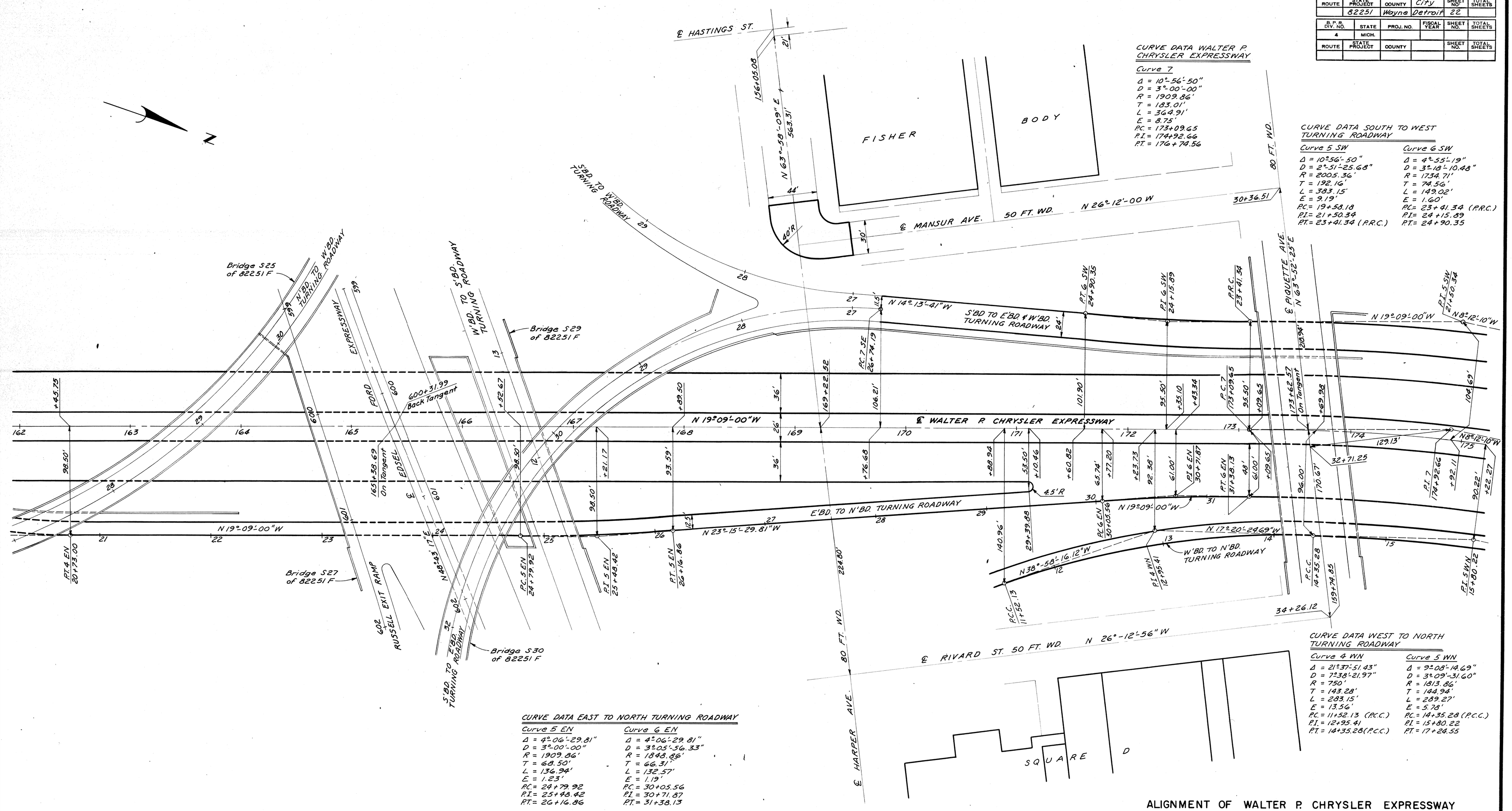

CURVE DATA EAST TO NORTH TURNING ROADWAY

Curve 5 EN	Curve 6 EN
Δ = 4°-06'-29.81"	Δ = 4°-06'-29.81"
D = 3°-00'-00"	D = 3°-05'-56.33"
R = 1909.86'	R = 1848.86'
T = 68.50'	T = 66.31'
L = 136.94'	L = 132.57'
E = 1.23'	E = 1.19'
P.C. = 24+79.92	P.C. = 30+05.56
P.I. = 25+48.42	P.I. = 30+71.87
P.T. = 26+16.86	P.T. = 31+38.13

CURVE DATA WEST TO NORTH TURNING ROADWAY

Curve 4 WN	Curve 5 WN
Δ = 21°-37'-51.43"	Δ = 9°-08'-14.69"
D = 7°-38'-21.97"	D = 3°-09'-31.60"
R = 750'	R = 1813.86'
T = 143.28'	T = 144.94'
L = 283.15'	L = 289.27'
E = 13.56'	E = 5.78'
P.C. = 11+52.13 (P.C.C.)	P.C. = 14+35.28 (P.C.C.)
P.I. = 12+95.41	P.I. = 15+80.22
P.T. = 14+35.28 (P.C.C.)	P.T. = 17+24.55

Scale : 1" = 40'

Note:
Survey Stationing shown in brackets thus, ( ).
Bench Marks are on City of Detroit Datum.
All street returns 15' R. unless otherwise noted.

ALIGNMENT OF WALTER P. CHRYSLER EXPRESSWAY STA. 162+00 TO STA. 175+00 AND EASTBOUND FORD TO NORTHBOUND CHRYSLER TURNING ROADWAY AND SOUTHBOUND CHRYSLER TO WESTBOUND FORD TURNING ROADWAY AND WESTBOUND FORD TO NORTHBOUND CHRYSLER TURNING ROADWAY

FILE NO. USE NO. 130 STENCIL	STATE PROJECT	FEDERAL PROJECT	SHEET NO.
82251 F C16	82251	I-75-1(183)33	22

10

PLANS PREPARED BY
CITY OF DETROIT
DEPARTMENT OF PUBLIC WORKS
CITY ENGINEERS OFFICE
BUREAU OF HIGHWAYS AND EXPRESSWAYS

Traced by F.Ca'Fabbiano
Checked by J.M.Breed 11-13-59
Corrected by F.Ca'Fabbiano 1-20-60
Back Ck'd by J.M.Breed 1-20-60

B.P.R. DIV. NO.	STATE	PROJ. NO.	FISCAL YEAR	SHEET NO.	TOTAL SHEETS
4	MICH.	F-75-1(193)153			
ROUTE	STATE PROJECT	COUNTY	City	SHEET NO.	TOTAL SHEETS
	82251	Wayne	Detroit	23	

B.P.R. DIV. NO.	STATE	PROJ. NO.	FISCAL YEAR	SHEET NO.	TOTAL SHEETS
4	MICH.				
ROUTE	STATE PROJECT	COUNTY		SHEET NO.	TOTAL SHEETS

E 20 FT. ALLEY
N 63°-58'-00"E
N 26°-13'-58"W
30 FT. WD
E HARPER AVE.
N28°-13'-58"W (26+37.88)
N63°-58'-09"E (156+03.08)
S HASTINGS ST. N 26°-10'-58"W (26+37.67)
(26+37.61)
(156+05.08)
FISHER BODY
E MANSUR AVE. 30 FT. WD. N 26°-12'-00"W
563.31' 563.52'
30
(155+76.31)
(30+36.26)
C.B.M. #142 Elev. 155.059 Arrow on Hydrant. N.W. Corner Hastings St. and Harper Ave.
C.B.M. #143 Elev. 155.728 Arrow on Hydrant. N.W. Corner Harper Ave. and Mansur Ave.
C.B.M. #144 Elev. 155.964 Arrow on Hydrant. N.W. Corner Harper Ave. and Rivard St.
C.B.M. #145 Elev. 155.869 Arrow on Hydrant. N. Side of Harper Ave., 255' E. of C.B.M. #144.
C.B.M. #146 Elev. 155.610 Arrow on Hydrant. N.E. Corner Harper Ave. and Russell St.

CURVE 4 WN
Δ = 21°-37'-51.43"
D = 7°-38'-21.97"
R = 750'
T = 143.28'
L = 283.15'
E = 13.56'
P.C. = 11+52.13 (P.C.C.)
P.I. = 12+95.41
P.T. = 14+35.28 (P.C.C.)

Curve 3WN
Δ = 91°-05'-43.79"
D = 16°-22'-12.80"
R = 350'
T = 356.76'
L = 556.67'
E = 149.78'
P.C. = 5+92.66
P.I. = 9+52.42
P.T. = 11+52.13 (P.C.C.)

+23.73
92.38'
P.I. 4 WN 12+95.41
+88.94
140.96'
P.C.C. 11+52.13
224.80'
P.I. N&S (155+31.68)
+22.52
N 19°-09'-00"W
E WALTER P. CHRYSLER EXPRESSWAY
N 17°-32'-24.49"W
E RIVARD ST. 50 FT. WD. N 26°-12'-56"W
P.T. P.I. 156+24.10 P.C. 30' 60'R (156+23.68) 30R 30' 86' 10 44.5' N 53°-27'-10"W P.T. 30R 80'R 35' P.C. 64' P.I. (155+31.89) (34+70.49) N 32°-53'-16.12"W (34+25.99)
SQUARE D
E HARPER AVE. 80 FT. WD. N 63°-58'-09"E
E RUSSELL ST. 60 FT. WD. N 26°-11'-18"W
(155+43.86 North) = (153+36.18 South)
(38+43.86)
W'BD. TO N'BD. TURNING ROADWAY
P.T. ML 8+80.24 (True Sta.) N 25°-26'-26.15"W
P.I. 8+04.94 N 76°-41'-30.90"E
P.C. 7+28.40 22° 71+35.41 4.5°R 41.46' 24' 7+ 4.5°R
Bridge X01 of 82024B C4
P.C. 3WN 5+35.66
P.T. 2WN & WS 5+11.62
P.T. 2 WN & WS 4+49.86
P.C. 2WN & WS 3+88.05
+4.33 23
S'BD. TO E'BD. TURNING ROADWAY
Bridge S30 of 82251 F
E WALTER P. CHRYSLER EXPRESSWAY
E'BD. TO N'BD. TURNING ROADWAY
Bridge S25 of 82251 F
Bridge S29 of 82251 F
Bridge S27 of 82251 F
N 51°-06'-18.25"E
W'BD. TO S'BD. TURNING ROADWAY
N'BD. TO W'BD. TURNING ROADWAY
P.C. 4 WS 17+17.36
600+31.99 Back Tangent
165+38.69 On Tangent
P.T. 600+51.92
N 48°-43'-17"E
E EDSEL FORD EXPRESSWAY
P.T. 596+08.50
P.T. 3WS 10+25.67
P.I. 3WS 9+78.85
P.T. 3 WN 9+32.42
P.C. 3WS 9+32.03
102.65'
100.71'
100.15'
39.72'
142.32'
100.19'
66.49
92.60'
90.82'
89.52'
83.81'
+82.26
+29.05
+55.48
+75.86
+02.44
+96.18
+12.16
+57.97
+59.00'
+12.11
+19.32

Mistake Lane W→N
Δ = 17°-49'-40.92"
D = 11°-44'-28.42"
R = 487.99'
T = 76.54'
L = 151.84'
E = 5.97'
P.C. = 7+28.40
P.I. = 8+04.94
P.T. = 8+80.24 (True Sta.) P.C.C.

Curve 3WS
Δ = 1°-10'-14.16"
D = 1°-15'-00"
R = 4583.66'
T = 46.83'
L = 93.65'
E = 0.24'
P.C. = 9+32.03
P.I. = 9+78.85
P.T. = 10+25.67

CURVE DATA EAST SERVICE DRIVE

Δ = 62°-29'-44"	Δ = 27°-19'-11"
D = 104°-10'-26.92"	D = 127°-19'-26.24"
R = 55.00'	R = 45.00'
T = 33.37'	T = 10.94'
L = 59.99'	L = 21.46'
E = 9.33'	E = 1.31'
P.C. = 155+00.52	P.C. = 156+13.16
P.I. = 155+33.89	P.I. = 156+24.10
P.T. = 155+60.51	P.T. = 156+34.62

CURVE DATA EDSEL FORD
Main Roadway
Δ = 13°-21'-50"
D = 1°-30'-00"
R = 3819.83'
T = 447.51'
L = 890.93'
E = 26.13'
P.C. = 59+60.99
P.I. = 596+08.50
P.T. = 600+51.92

Curve 3WS
Δ = 1°-10'-14.16"
D = 1°-15'-00"
R = 4583.66'
T = 46.83'
L = 93.65'
E = 0.24'
P.C. = 9+32.03
P.I. = 9+78.85
P.T. = 10+25.67

Curve 2WN & WS
Δ = 4°-05'-11.34"
D = 3°-18'-25.55"
R = 1732.51'
T = 61.81'
L = 123.57'
E = 1.10'
P.C. = 3+88.05
P.I. = 4+49.86
P.T. = 5+11.62

Note:
Survey Stationing shown in brackets thus,( ).
Bench Marks are on City of Detroit Datum.

Scale 1" = 40'

ALIGNMENT OF WESTBOUND FORD TO NORTHBOUND CHRYSLER TURNING ROADWAY, AND WESTBOUND FORD TO SOUTHBOUND CHRYSLER TURNING ROADWAY

FILE NO. NOT USED STENCIL	STATE PROJECT	FEDERAL PROJECT	SHEET NO.
82251 F C16	82251	F-75-1(193)153	23

10

B.P.R. DIV. NO.	STATE	PROJ. NO.	FISCAL YEAR	SHEET NO.	TOTAL SHEETS
4	MICH.	I-751(43)153			
ROUTE	STATE PROJECT	COUNTY	City	SHEET NO.	TOTAL SHEETS
	82251	Wayne	Detroit		

B.P.R. DIV. NO.	STATE	PROJ. NO.	FISCAL YEAR	SHEET NO.	TOTAL SHEETS
4	MICH.				
ROUTE	STATE PROJECT	COUNTY		SHEET NO.	TOTAL SHEETS

PLANS PREPARED BY
CITY OF DETROIT
DEPARTMENT OF PUBLIC WORKS
CITY ENGINEERS OFFICE
BUREAU OF HIGHWAYS AND EXPRESSWAYS

C.B.M.#143 Elev. 155.728 Arrow on Hydrant. N.W. Corner Harper Ave. and Mansur Ave.

C.B.M.#144 Elev. 155.964 Arrow on Hydrant. N.W. Corner Harper Ave. and Rivard St.

C.B.M.#145 Elev. 155.869 Arrow on Hydrant. N. side of Harper Ave., 255' E. of C.B.M. #144

C.B.M.#146 Elev. 155.610 Arrow on Hydrant. N.E. Corner Harper Ave. and Russell St.

C.B.M.#147 Elev. 155.988 Arrow on Hydrant. N.E. Corner Medbury Ave. and Russell St.

Mistake Lane in S to E
Δ = 17°-49'-40.92"
D = 11°-44'-28.42"
R = 487.99'
T = 76.54'
L = 151.84'
E = 5.97'
P.C. = 27+85.54
P.I. = 28+62.08
P.T. = 29+37.38 (True Sta.)

Curve 7 SE
Δ = 77°-54'-24.79"
D = 15°-48'-20.64"
R = 362.50'
T = 293.06'
L = 492.90'
E = 103.64'
P.C. = 26+74.19
P.I. = 29+67.25
P.T. = 31+67.09

Curve 8 SE
Δ = 45°-01'-32.95"
D = 13°-53'-23.59"
R = 412.50'
T = 170.97'
L = 324.16'
E = 34.03'
P.C. = 31+67.09 = P.T. 7 SE
P.I. = 33+38.06
P.T. = 34+91.25

Curve 5 NE
Δ = 10°-48'-54.54"
D = 1°-14'-00"
R = 4645.60'
T = 439.76'
L = 876.90'
E = 20.77'
P.C. = 30+92.55 = P.T. 4 NE
P.I. = 35+32.31
P.T. = 39+69.46

Curve 4 NE
Δ = 51°-34'-44.46"
D = 16°-22'-12.80"
R = 350'
T = 169.12'
L = 315.08'
E = 38.72'
P.C. = 27+77.47
P.I. = 29+46.59
P.T. = 30+92.55 = P.C. 5 NE

CURVE DATA EDSEL FORD
Main Roadway
Δ = 13°-21'-50"
D = 1°-30'-00"
R = 3819.83'
T = 447.51'
L = 890.93'
E = 26.13'
P.C. = 59/+60.99
P.I. = 596+08.50
P.T. = 600+51.92

Note:
Survey Stationing shown in brackets thus ( )
Bench Marks are on City of Detroit Datum.

Scale 1"=40'

ALIGNMENT OF SOUTHBOUND CHRYSLER TO EASTBOUND FORD TURNING ROADWAY, AND NORTHBOUND CHRYSLER TO EASTBOUND FORD TURNING ROADWAY

FILE NO. USE NO. 350 STENCIL	STATE PROJECT	FEDERAL PROJECT	SHEET NO.
82251 F C16	82251	I-75-1(43)153	24

10

PLANS PREPARED BY
CITY OF DETROIT
DEPARTMENT OF PUBLIC WORKS
CITY ENGINEERS OFFICE
BUREAU OF HIGHWAYS AND EXPRESSWAYS

C.B.M. #142 Elev. 155.059 Arrow on Hydrant N.W. Corner Harper Ave. and Hastings St.

C.B.M. #143 Elev. 155.728 Arrow on Hydrant N.W. Corner Harper Ave. and Mansur Ave.

B.P.R. DIV. NO.	STATE	PROJ. NO.	FISCAL YEAR	SHEET NO.	TOTAL SHEETS
4	MICH.	I-75-1(93)53			
ROUTE	STATE PROJECT	COUNTY	City	SHEET NO.	TOTAL SHEETS
	82251	Wayne	Detroit	25	

B.P.R. DIV. NO.	STATE	PROJ. NO.	FISCAL YEAR	SHEET NO.	TOTAL SHEETS
4	MICH.				
ROUTE	STATE PROJECT	COUNTY		SHEET NO.	TOTAL SHEETS

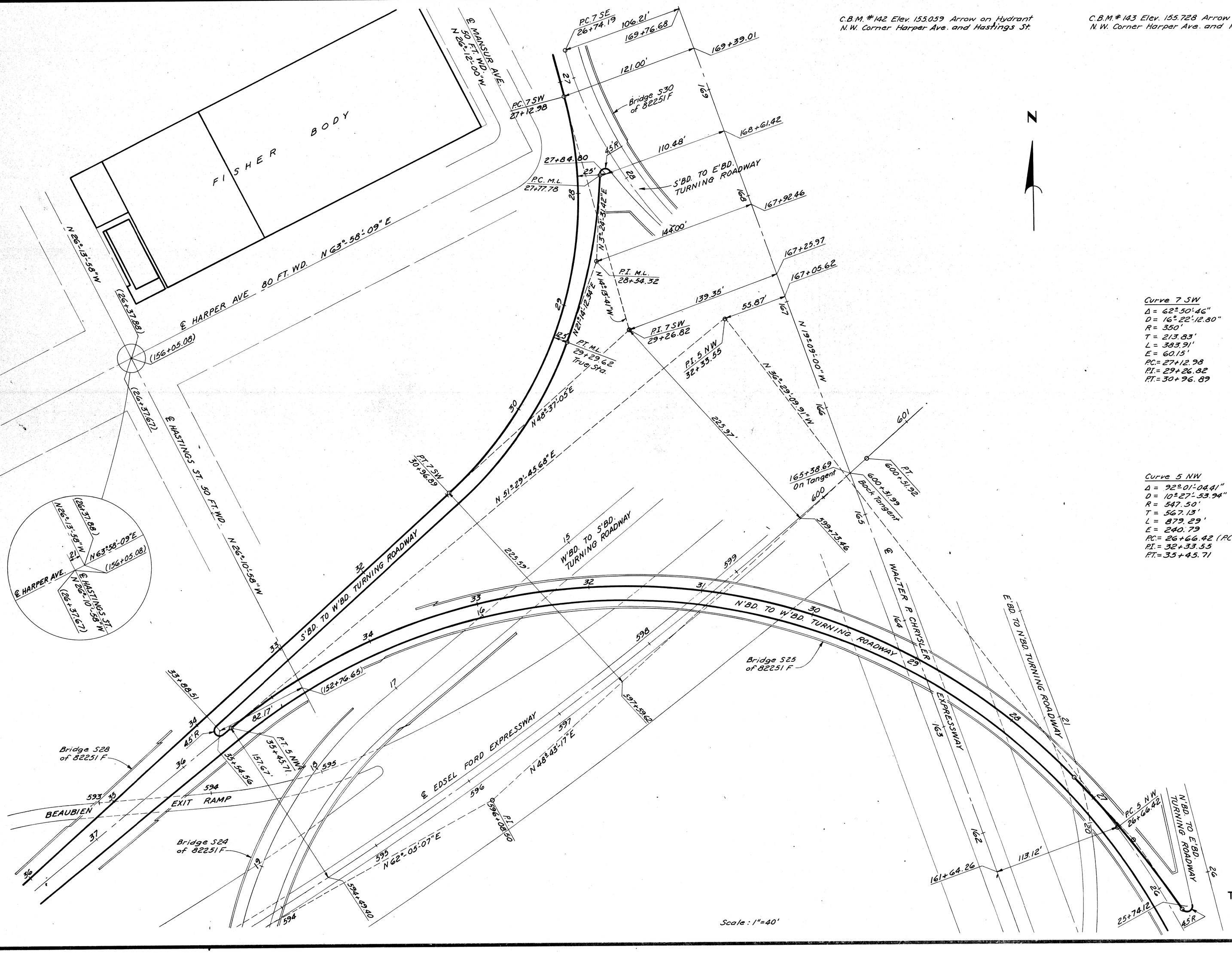

Curve 7 SW
Δ = 62°-50'-46"
D = 16°-22'-12.80"
R = 350'
T = 213.83'
L = 383.91'
E = 60.15'
P.C. = 27+12.98
P.I. = 29+26.82
P.T. = 30+96.89

Mistake Lane in SW
Δ = 17°-49'-40.92"
D = 11°-44'-28.42"
R = 487.99'
T = 76.54'
L = 151.84'
E = 5.97'
P.C. = 27+77.78
P.I. = 28+54.32
P.T. = 29+29.62 (True Sta.)

Curve 5 NW
Δ = 92°-01'-04.41"
D = 10°-27'-53.94"
R = 547.50'
T = 567.13'
L = 879.29'
E = 240.79
P.C. = 26+66.42 (P.C.C.)
P.I. = 32+33.55
P.T. = 33+45.71

Note:
Survey Stationing shown in brackets thus, ( )
Bench Marks are on City of Detroit Datum.

ALIGNMENT OF SOUTHBOUND CHRYSLER TO WESTBOUND FORD TURNING ROADWAY AND NORTHBOUND CHRYSLER TO WESTBOUND FORD TURNING ROADWAY

FILE NO. IN USE NO. USED STENCIL	STATE PROJECT	FEDERAL PROJECT	SHEET NO.
82251 F C16	82251	I-75-1(93)53	25

PLANS PREPARED BY
CITY OF DETROIT
DEPARTMENT OF PUBLIC WORKS
CITY ENGINEER (CHIEF
HIGHWAYS AND EXPRESSWAYS

B.P.R. DIV. NO.	STATE	PROJ. NO.	FISCAL YEAR	SHEET NO.	TOTAL SHEETS
4	MICH.	F.75-1(43)53			
ROUTE	STATE PROJECT	COUNTY	City	SHEET NO.	TOTAL SHEETS
	82251	Wayne	Detroit	26	

B.P.R. DIV. NO.	STATE	PROJ. NO.	FISCAL YEAR	SHEET NO.	TOTAL SHEETS
4	MICH.				
ROUTE	STATE PROJECT	COUNTY		SHEET NO.	TOTAL SHEETS

WICKEY (KENDLE)
WICKEY
WOLKAN
WICKEY
Allan E. Wickey
A. M. Wickey

9/61
9/61
9/61
9/61

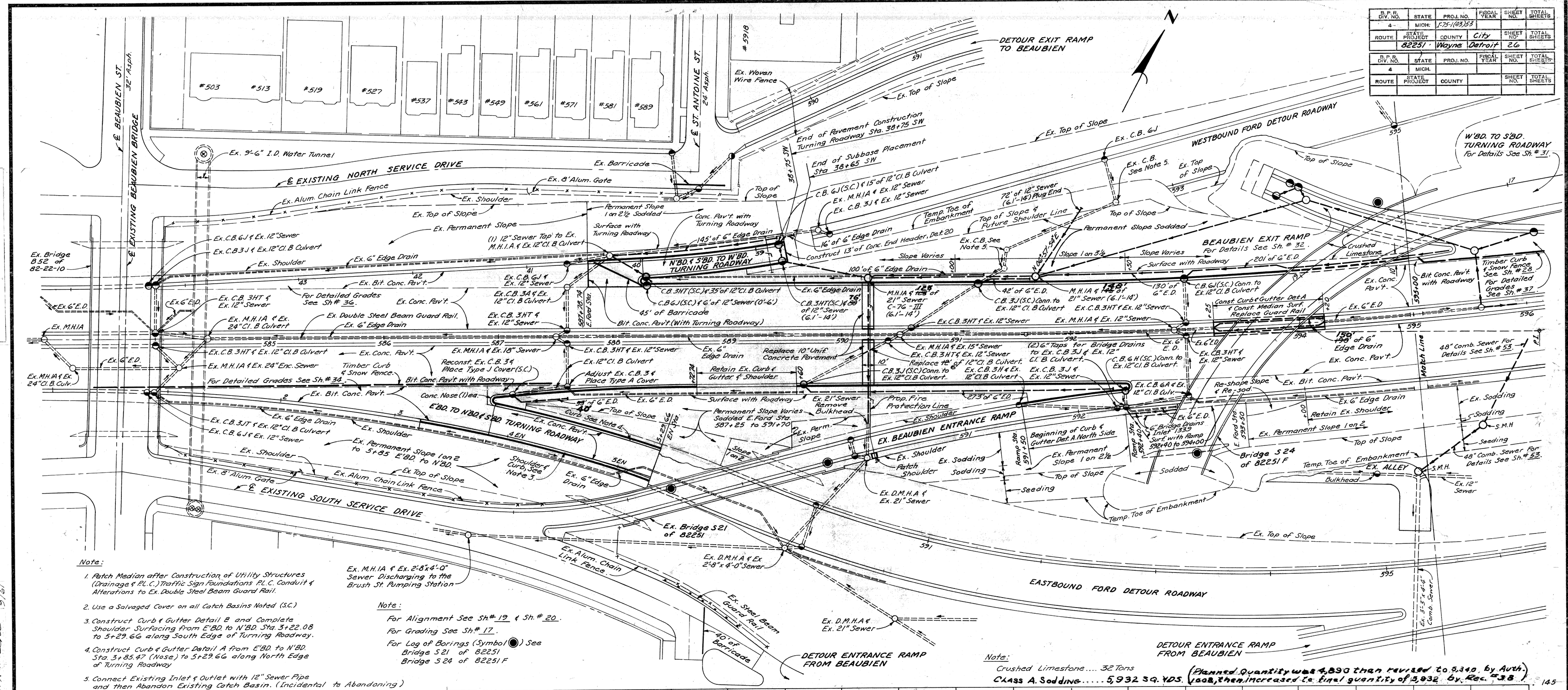

Note:

1. Patch Median after Construction of Utility Structures (Drainage & P.L.C.) Traffic Sign Foundations P.L.C. Conduit & Alterations to Ex. Double Steel Beam Guard Rail.
2. Use a Salvaged Cover on all Catch Basins Noted (S.C.)
3. Construct Curb & Gutter Detail B and Complete Shoulder Surfacing from E'BD. to N'BD. Sta. 3+22.08 to 5+29.66 along South Edge of Turning Roadway.
4. Construct Curb & Gutter Detail A from E'BD. to N'BD. Sta. 3+85.47 (Nose) to 5+29.66 along North Edge of Turning Roadway.
5. Connect Existing Inlet & Outlet with 12" Sewer Pipe and then Abandon Existing Catch Basin. (Incidental to Abandoning)

Note:

For Alignment See Sh.# 19 & Sh.# 20.
For Grading See Sh.# 17.
For Log of Borings (Symbol ◉) See
Bridge S 21 of 82251
Bridge S 24 of 82251 F

Note:

Crushed Limestone.... 32 Tons
CLASS A. Sodding..... 5,932 SQ. YDS. (Planned Quantity was 4,893 than revised to 5,340 by Auth. 1008, then increased to final quantity of 5,932 by Rec. #38)

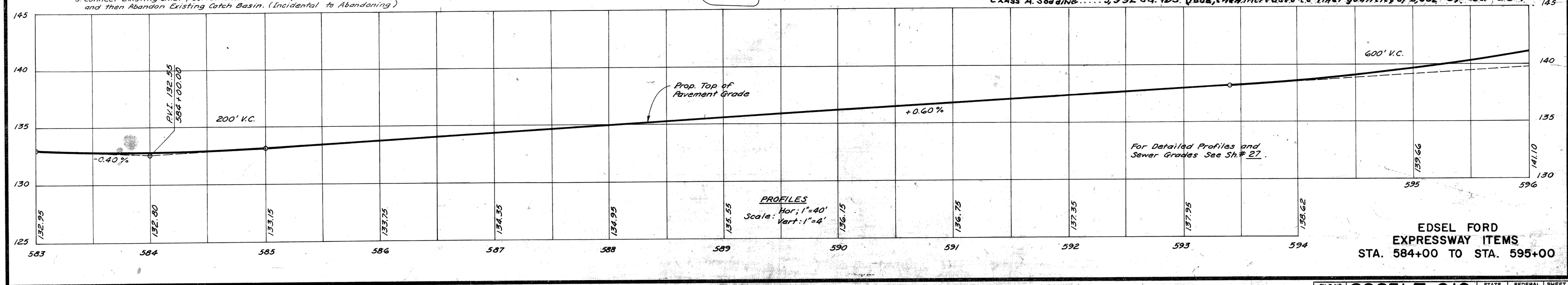

EDSEL FORD
EXPRESSWAY ITEMS
STA. 584+00 TO STA. 595+00

FILE NO. U.S. NO. 230 STENCIL	82251 F C16	STATE PROJECT	FEDERAL PROJECT	SHEET NO.
		82251	F.75-1(43)53	26

B.P.R. DIV. NO.	STATE	PROJ. NO.	FISCAL YEAR	SHEET NO.	TOTAL SHEETS
4	MICH.	I-75-1(145)53			
ROUTE	STATE PROJECT	COUNTY		SHEET NO.	TOTAL SHEETS
	82251	Wayne	City Detroit	27	

B.P.R. DIV. NO.	STATE	PROJ. NO.	FISCAL YEAR	SHEET NO.	TOTAL SHEETS
4	MICH.				
ROUTE	STATE PROJECT	COUNTY		SHEET NO.	TOTAL SHEETS

CITY OF DETROIT
DEPARTMENT OF PUBLIC WORKS
CITY ENGINEERING DIVISION
BUREAU OF HIGHWAYS AND EXPRESSWAYS

	DATE
PRELIMINARY OPERATION RECOMMENDED	
PRELIMINARY RECOMMENDED	
FINAL DESIGN	
PLANS PROPOSED	
PLANS CHECKED	
FINAL DESIGN CHECKED	
TRACED	
PLANS & E.O.W. CHECK	
QUANTITIES	
QUANTITIES CHECKED	
SQUAD	
PRELIMINARY GRADE	
GRADE INSPECTION	
FEDERAL INSPECTION	

BY	DATE

WILKEY / KEWLER
SMITS
KENDALL
Allen E. Kaye
A.A. Kaufe

* Earth Excavation 1,014 Cu. Yds.
* Fill (+.25) 7,531
* Selected Sewer Backfill 221
(Obtained from Sh.# 30) 7,752
* Waste 7,752 Cu. Yds.
* Subbase (Compacted in Place) 1,014 Cu. Yds.
* Selected Subbase 2A 65% Cu. Yds.
22.5 Tons

* Includes the N'BD. & S'BD. to W'BD. Turning Roadway the E'BD. to N'BD. & S'BD. Turning Roadway and The Beaubien Entrance Ramp.

* Sod Backslope, 4,890 Sq. Yds. Class A Sodding

300' of Superelevation Transition For Westbound Roadway

Rate of Superelevation = +0.021 ft/ft

Proposed Taper

Prop. Taper

Sta. 39+26.5 — W Turning Roadway

Sta. 38+80.5 — W Turning Roadway

Ex. MH 11A

Detour Sta. 589+92

Detour Sta. 590+01

Ex. 12" Sewer

Inlet 130.15
Ex. 6" E.D. @ +0.5%
Inlet 130.0
Outlet 128.82 to Ex. MH 11A

4" Fire Protection Line

6" Edge Drain @ +4.0%

Inlet 134.0

12" Sewer @ +2.6%

6" Edge Drain @ +2.6%

Outlet 132.9

Ex. 12" @ +0.4%

Inlet 132.7

Outlet 130.2

Ex. Outlet 129.9

Ex. 6" Edge Drain @ +0.3%

Ex. Inlet 128.8
Ex. Outlet 128.5
Ex. Inlet 128.6

Proposed Edge of Pav't. Grade 2' Elevations for North Edge of Westbound Roadway

Existing 9'-6" I.D. Water Tunnel

Ex. Outlet 129.6
Ex. Inlet 129.7

Ex. Inlet 129.4
Ex. Outlet 129.3

Ex. Outlet 129.0
Ex. Inlet 129.1

Ex. Outlet 130.9
Ex. Inlet 130.5
Ex. Outlet 130.6

Ex. Outlet 130.6
Ex. Inlet 130.6

Outlet 132.5
Inlet 130.5 from Turning Rdwy.

Ex. Inlet 129.68 from Detour MH
Inlet 129.68 from 6" E.D.
Inlet 129.68 from Turning Rdwy. C.B.

Noise @ 588+27.08

21" Sewer C-76-III @ 0.45%
Outlet 125.41 to South

Inlet 125.61

6" E.D. @ +0.4%

Inlet 131.0
Use Ex. 12" Sewer

Outlet 126.19

Inlet 126.6

18" @ +0.5%
From Beaubien Exit Ramp M.H. See Sh.# 32

21" Sewer @ +0.4%

12" Sewer @ +2.7%
From Future Turning Rdwy C.B.

6" Edge Drain @ +0.4%

6" Edge Drain @ +1.0%

Inv. 133.3

Inlet 132.9
Use Ex. 12" Sewer

Inlet 131.5

Inlet 131.0

Proposed Taper

Ex. 6" Edge Drain @ +0.6%

Ex. 18" Sewer @ +0.6%

Ex. 24" Sewer

Ex. Inlet 126.3
Ex. Outlet 125.8
Ex. Inv. 125.6

(2) Ex. Inlets 128.9
Ex. Outlet 128.2

Ex. Inlet 128.45

4" Fire Protection Line

Ex. 6" Edge Drain @ +0.6%

Ex. 15" Sewer @ +0.6%

Provide a 3'-6" x 4'-0" Long Conc. Enclosed Section Under Ex. 15" Sewer (Incidental to 21" Sewer)

Ex. Inlet 130.5
(2) Ex. Inlets 130.5
Ex. Outlet 130.25

21" Sewer C-76-III

Ex. Inlet 130.6
Ex. Outlet 130.6

Ex. Outlet 130.6
Ex. Inlet 130.6

Ex. Outlet 132.1
Ex. Inlet 132.1

Ex. Outlet 131.9
(2) Ex. Inlet 132.0
Ex. Outlet 132.1

Ex. Inlet 133.4

Ex. 6" E.D. @ +0.8%

6" E.D. @ +0.8%

Connect to Ex. Edge Drain

Ex. 6" E.D. @ +0.8%

Inv. 134.44

For Layout of (2) 6" Edge Drains See Sh.# 20

Proposed Top of Pav't. Grade

200' V.C.

Ex. 6" Edge Drain @ +0.25%

Ex. Inlet 128.2
Ex. Outlet 128.0
Ex. Inlet 128.1

Existing 9'-6" I.D. Water Tunnel

Proposed Edge of Pav't. Grade 2' Elevations for South Edge of Eastbound Roadway

Proposed Taper

Place J Cover

Place A Cover

Inlet 131.2

6" Edge Drain @ +0.8%

4" Fire Protection Line

Match Elev. of Ex. 12" Culvert

Ex. 6" Edge Drain @ +0.6%

6" E.D. @ +0.4%

Ex. Inlet 129.8
Ex. Outlet 129.3

Ex. Inlet 129.4
Ex. Inlet 130.0
Ex. Outlet 129.6

Noise @ 596+95.32

Match Elev. of Ex. 12" Culv.

Noise @ 592+47.66

Ramp Sta. 592+42.73

138' @ Ramp

132.25 Ramp

Ex. 6" Edge Drain @ +0.8%

Ex. Inlet 134.0
Ex. Outlet 133.0

Ex. Inlet 133.2 From Ramp

300' of Superelevation Transition For Eastbound Roadway

21" Sewer C-76-III

Rate of Superelevation = +0.021 ft/ft

600' V.C.

PVI 139+39 +3.00%
PVT 143+00 +0.60%

PROFILES
Scale: Hor. 1"=40'
Vert. 1"=4'

EDSEL FORD
EXPRESSWAY PROFILES
STA. 584+00 TO STA. 595+00

FILE NO. USE THIS NO. ON STENCIL	STATE PROJECT	FEDERAL PROJECT	SHEET NO.
82251 F C16	82251	I-75-1(145)53	27

B.P.R. DIV. NO.	STATE	PROJ. NO.	FISCAL YEAR	SHEET NO.	TOTAL SHEETS
4	MICH.	I-75 I(93)53			
ROUTE	STATE PROJECT	COUNTY	City	SHEET NO.	TOTAL SHEETS
	82251	Wayne	Detroit	28	

B.P.R. DIV. NO.	STATE	PROJ. NO.	FISCAL YEAR	SHEET NO.	TOTAL SHEETS
4	MICH.				
ROUTE	STATE PROJECT	COUNTY		SHEET NO.	TOTAL SHEETS

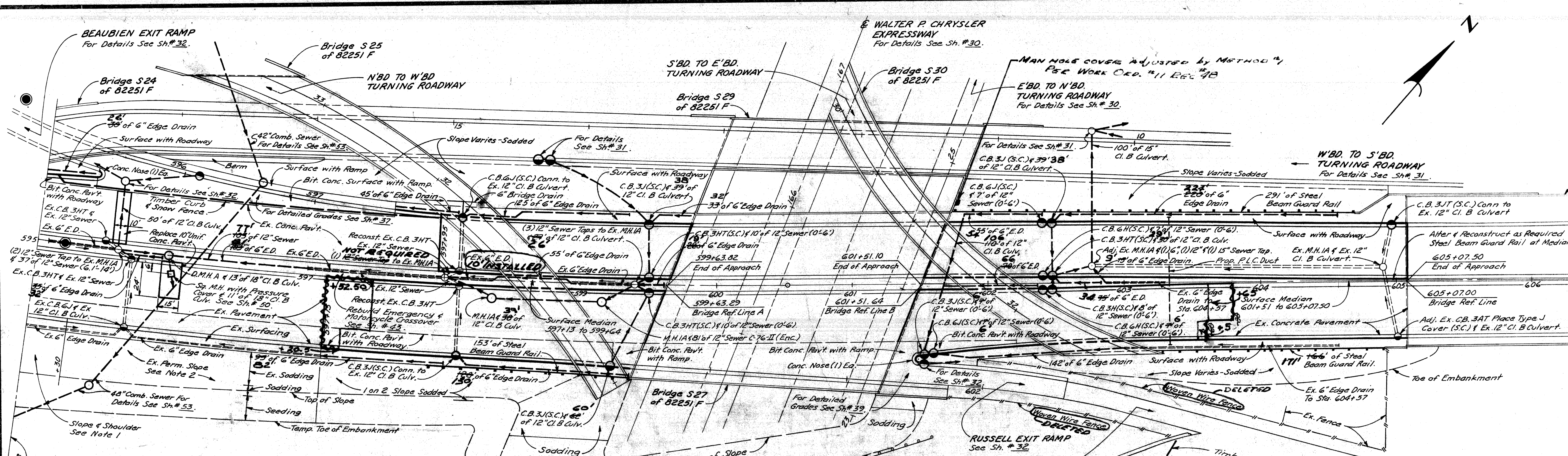

Notes:

1. After the Removal of the Ex. Hastings St. Pedestrian Bridge B53 of 82-22-10 Reconstruct Median and South Shoulder. Also Grade (1 on 2) & Sod South Slope from E. Ford Sta. 595+00 to 595+30.
2. Retain Shoulder & Slope (1 on 2) with Sodding South Side from E. Ford Sta. 595+30 to 597+13.
3. Patch Median after Construction of Utility Structures (Drainage & P.L.C.), Traffic Sign Foundations, P.L.C. Conduit & Alterations to Ex. Double Steel Beam Guard Rail.
4. Use a Salvaged Cover on all Catch Basins noted (S.C.).

Note:

Bridge Header Detail 21

Bridge X11 of 82-22-10
42' at West Approach

Bridge S 27 of 82251
87' at East Approach
87' at West Approach

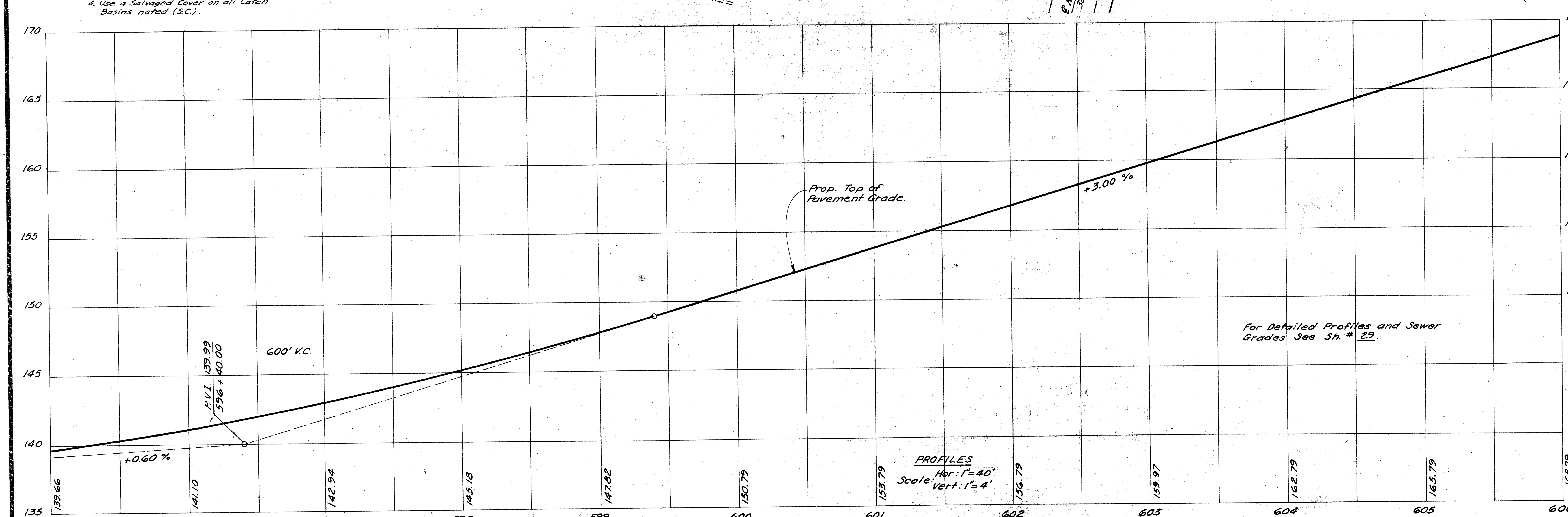

Deleted by Rec. #45

Increased by Rec #38

Guard Rail and Fence (This Sheet)

Steel Beam Guard Rail .... 615 ~~610~~ Lin. ft.
Woven Wire Fence .... -0- ~~25~~ Lin. Rods
Class A Sodding .... 2,165 Sq. Yd
(Planned quantity was 3,490 Sq. Yd. & was revised to 3,649 by Auth. 1015 & then decrease to 2,165 Sq. Yds. by Rec. #38)

Note:

For Alignment See Sh.# 20 & Sh.# 21.

For Grading See Sh.# 18.

For Log of Borings (Symbol ◉) See Bridge B53 of 82-22-10

EDSEL FORD
EXPRESSWAY ITEMS
STA. 595+00 TO STA. 605+07.50

FILE NO. USE NO. 350 STENCIL	82251 F C16	STATE PROJECT 82251	FEDERAL PROJECT I-75 I(93)53	SHEET NO. 28

B.P.R. DIV. NO.	STATE	PROJ. NO.	FISCAL YEAR	SHEET NO.	TOTAL SHEETS
4	MICH.	I-75(143)55			
ROUTE	STATE PROJECT	COUNTY	City	SHEET NO.	TOTAL SHEETS
	82251	Wayne	Detroit	29	

B.P.R. DIV. NO.	STATE	PROJ. NO.	FISCAL YEAR	SHEET NO.	TOTAL SHEETS
4	MICH.				
ROUTE	STATE PROJECT	COUNTY		SHEET NO.	TOTAL SHEETS

OPERATION	BY	DATE
SURVEYED		
PLANS DRAWN		
PLANS PLOTTED		
PROFILE PLOTTED		
PROFILE CHECKED		
CROSS SECTIONS CHECKED		
GRADE INSPECTION		
FEDERAL INSPECTION		

OPERATION	BY	DATE
PRELIMINARY H.G. W. CHECKED		
FINAL DESIGN		
FINAL DESIGN CHECKED		
TRACED		
FINAL H.G. W. CHECK		
QUANTITIES		
QUANTITIES CHECKED		
SQUAD		

9/61 WICKEY / KENZLER
9/61 WICKEY
9/61 HOLLAN
9/61 KENZLER
9/61 [illegible]
9/61 H. R. Klatt

Rate of Superelevation = 0.021' per ft.

300' Superelevation Transition For Westbound Roadway

Earth Excavation 1535 / 1,923 Cu. Yds.
Fill (+.25) 1,656
Selected Sewer Backfill (+.25) 76
Obtained from Sh.# 30. 1,732 1,732 Cu. Yds.
Waste 1532 / 1,603 Cu. Yds.
Subbase (Compacted in Place) 735 Cu. Yds.
Selected Subbase 2A A 1664 Tons

* Sod Backslopes, 3,499 Sq. Yds. Class A Sodding

* Includes the Walter P. Chrysler Expressway and the E.B.D. to N.B.D. Turning Roadway

Proposed Edge of Pav't. Grade & Elevations for North Edge of Westbound Roadway

Proposed Taper

See Bridge Sht of B8225I F

Proposed Edge of Pav't. Grade

Proposed Top of Pav't. Grade

Proposed Edge of Pav't. Grade & Elevations for South Edge of Eastbound Roadway

Proposed Top of Pav't. Grade

Rate of Superelevation = +0.021' per ft.

300' Superelevation Transition For Eastbound Roadway

PROFILES
Scale: Vert. 1" = 4'
Hor. 1" = 40'

EDSEL FORD
EXPRESSWAY PROFILES
STA. 595+00 TO STA. 605+07.50

FIL. NO. W&S 350 STENCIL	82251 F C16	STATE PROJECT	FEDERAL PROJECT	SHEET NO.
		82251	I-75-1(143)55	29

PLANS PREPARED BY
CITY OF DETROIT
DEPARTMENT OF PUBLIC WORKS
CITY ENGINEER, CHIEF
BUREAU OF HIGHWAYS AND TRAFFIC ENGINEERING

OPERATION	BY	DATE
SURVEYED		
PLAN DRAWN		
PLAN CHECKED		
PROFILE PLOTTED		
PROFILE CHECKED		
FINAL DESIGN CHECKED		
FINAL R.O.W. CHECK		
QUANTITIES	WICKEY	9/61
QUANTITIES CHECKED	WICKEY	9/61
GRADE INSPECTION	WICKEY	9/61
FEDERAL INSPECTION	[illegible]	9/61

OPERATION	BY	DATE
PRELIMINARY R.O.W. CHECKED		
FINAL DISC'S		
FINAL DESIGN CHECKED		
FINAL PLANS		
FINAL R.O.W. CHECK		
QUANTITIES	WICKEY	9/61
QUANTITIES CHECKED	WICKEY	9/61
GRADE INSPECTION	[illegible]	9/61
FEDERAL INSPECTION	[illegible]	9/61

B.P.R. DIV. NO.	STATE	PROJ. NO.	FISCAL YEAR	SHEET NO.	TOTAL SHEETS
4	MICH.	I-75-1(45)155			
ROUTE	STATE PROJECT	COUNTY	City	SHEET NO.	TOTAL SHEETS
	82251	Wayne	Detroit	30	

B.P.R. DIV. NO.	STATE	PROJ. NO.	FISCAL YEAR	SHEET NO.	TOTAL SHEETS
4	MICH.				
ROUTE	STATE PROJECT	COUNTY		SHEET NO.	TOTAL SHEETS

Temp Toe of Embankment
Top of Slope
Bridge S25 of 82251F
E. EDSEL FORD EXPRESSWAY For Details See Sh# 28
W'BD to S'BD TURNING ROADWAY For Details See Sh# 31
Temp Toe of Embankment
Top of Slope
Perm. Slope Varies - Sodded Deleted
Bridge S27 of 82251F
Perm. Slope 1 on 2 - Sodded
EASTBOUND FORD DETOUR ROADWAY
Slope Stake Line
Bottom of Slope
8" Sewer to Drain Bridge Deleted
SOUTHBOUND ROADWAY
Bridge S29 of 82251F
8" Sewer to Drain Bridge
6' of 6" E.D. Plug End
310' 350' of Two Cable Guard Rail 5'-6"
168 & WALTER P. CHRYSLER EXPRESSWAY
-0- 6' of 6" E.D. Plug End
165 MH/A & 65' of 15" Sewer C-76-II (Enc.)
166 65' of 15" Sewer C-76-II (Enc.) Plug End
350' 370' of Two Cable Guard Rail
5'-6"
10'-0" Min.
MH/A & 66' of 18" Sewer (6'-11") Plug End Deleted
142+60 of 6" E.D.
MH/A & 63' of 12" Cl. 'B' Culvert
NORTHBOUND ROADWAY
E'BD to N'BD TURNING ROADWAY
8" Sewer to Drain Bridge Deleted
MH/A & 29' of 12" Class 'B' Culvert
CB 2 H & 6' of 12" Sewer (0'-8")
CB 3 H & 16' of 12" Class 'B' Culvert
MH/A & 164' of 12" Sewer C-76-II (Enc.)
8" Sewer to Drain Bridge
6' of 6" E.D. Plug End
Slope Stake Line
WESTBOUND FORD DETOUR ROADWAY
NOTE: ALL DELETED ITEMS ARE TRANSFERRED TO B1-82251F-C21-RE-FER TO RECOMMEND-ATIONS + QUANTITY SHEETS
DETOUR EXIT RAMP TO RUSSELL
-0- 6' of 6" E.D. Plug End
142+60 of 6" E.D.
8" Sewer to Drain Bridge
CB 6 J & 6' of 12" Sewer (0'-6)
8" Sewer to Drain Bridge
CB 3 J & 6' of 12" Cl. 'B' Culv.
NOTE: Quantity Sheet Shows only 160 (L.Ft.)
Notes:
For Alignment See Sh# 22
For Log of Boring (Symbol ◉) See Bridge S27 of 82251F Bridge S29 of 82251F
For Grading See Sh# 18
RUSSELL EXIT RAMP For Details See Sh# 32
(Perm. Slope 1 on 2 Sodded Deleted)
Bridge S30 of 82251F
PLAN Scale: 1"=40'
Steel Beam Guard Rail Salvaged Material Substituted by Author
DELETED BY AUTH. 1011 Guard Rail (This Sheet)
Two Cable Guard Rail: 720 Lin. Ft.
Steel Beam Guard Rail (Salvaged Material): 630 Lin. Ft.
Decrease: 90 Lin. Ft.

Walter P. Chrysler Expressway Stationing
Prop. Future Edge of Pavement Grade
Prop. Future Edge of Pavement Grade & Elevations for West Edge of Southbound Chrysler Expressway
Slope Stake Line
Approximate Ground Profile
Slope Stake Line
* Earth Excavation 53,885 Cu. Yds.
* Selected Sewer Backfill (+25) 32
Less to Removal Sh# 15 80
Less to Removal Sh# 16 10
Less to Sh# 27 7,752
Less to Sh# 29 1,732
9,612 Cu. Yds.
Waste 9,612 Cu. Yds.
40,233
* Includes the E'BD to N'BD Turning Roadway
Prop. Future Top of Pavement Grade
Existing Ground Profile: Centerline Profile
Proposed Future Top of Pavement Grade

E'BD to N'BD Turning Roadway Stationing
Prop. Future Edge of Pavement Grade & Elev. for Right Hand Edge of Turning Roadway
Prop. Future Edge of Pavement Grade
Inlet 127.5 from 8" Bridge Drain
Outlet 127.6
Outlet 127.2
Inlet 127.4
1 on 1½ Slope
PVI 131.06 23+76.63
-8.70%
+0.5%
250' V.C.
Inlet 130.8 from 6" E.D. @ -4.7%
Inlet 129.5 from 12" Culvert @ -4.0%
8" Inlet 130.2
Inlet 127.3
Inlet 128.3 from 6" E.D. @ +0.5%
6" E.D. @ +0.4%
Inlet 128.4 from 8" Bridge Drain
Outlet 127.6
Inlet 127.4
12" C-76-II (Enc.) @ +0.4%
Outlet 127.2
Outlet 124.1
Inlet 125.1
Outlet 125.8
Inlets (2) 127.0
+0.50%
Construct to Clear Abutment
Prop. Future Edge of Pavement Grade
PROFILE Scale: Hor. 1"=40' Vert. 1"=4'
Bottom of Cut
Inlets (2) 125.0 6" E.D. from West 8" from West
18" @ +0.7%
Outlet 122.80
Inlet 123.5
Inlet 123.0
+0.90%
8" Inlet 126.8
6" E.D. @ +0.9%
15" C-76-II (Enc.) @ +0.9%
6" Inlet 126.0
Inlet 127.0
6" E.D. @ +0.9%
Invert 127.6
Invert 125.13
15" C-76-II (Enc.) @ +0.9%
Inv. 124.55
Bottom of Cut
Prop. Future Edge of Pavement Grade
8" Inlet 127.4
To M.H. at N'bd. Chrysler
From M.H. at Turning Roadway
Outlet 123.7
Inlet 123.9
Prop. Future Edge of Pavement Grade & Elevations for East Edge of Northbound Chrysler Expressway

PLAN AND PROFILES FOR WALTER P. CHRYSLER EXPRESSWAY AND EASTBOUND FORD TO NORTHBOUND CHRYSLER TURNING ROADWAY

FILE NO. U.S. DEPT. OF COMM. STENCIL	STATE PROJECT	FEDERAL PROJECT	SHEET NO.
82251 F C16	82251	I-75-1(45)155	30

B.P.R. DIV. NO.	STATE	PROJ. NO.	FISCAL YEAR	SHEET NO.	TOTAL SHEETS
4	MICH.	F-13-1(193)358			
ROUTE	STATE PROJECT	COUNTY	City	SHEET NO.	TOTAL SHEETS
	82251	Wayne	Detroit	32	

B.P.R. DIV. NO.	STATE	PROJ. NO.	FISCAL YEAR	SHEET NO.	TOTAL SHEETS
4	MICH.				
ROUTE	STATE PROJECT	COUNTY		SHEET NO.	TOTAL SHEETS

OPERATION	BY	DATE
SURVEYED		
PLAN PLOTTED		
PLAN CHECKED		
PROFILE PLOTTED		
PROFILE CHECKED		
PRELIMINARY GRADE		
GRADE INSPECTION		
FEDERAL INSPECTION		

OPERATION	BY	DATE
PRELIMINARY R.O.W. CHECKED		
FINAL DESIGN		
FINAL DESIGN CHECKED		
FINAL R.O.W. CHECK		
QUANTITIES		
QUANTITIES CHECKED		
SQUAD		

Note:

1. Construct 13' of Concrete End Header, Detail 20

Notes:

For Alignment See Sh.# 19 & 20.

For Grading See Sh.# 17 & 18.

For Log of Borings (Symbol ◉) See Bridge S24 of 82251 F

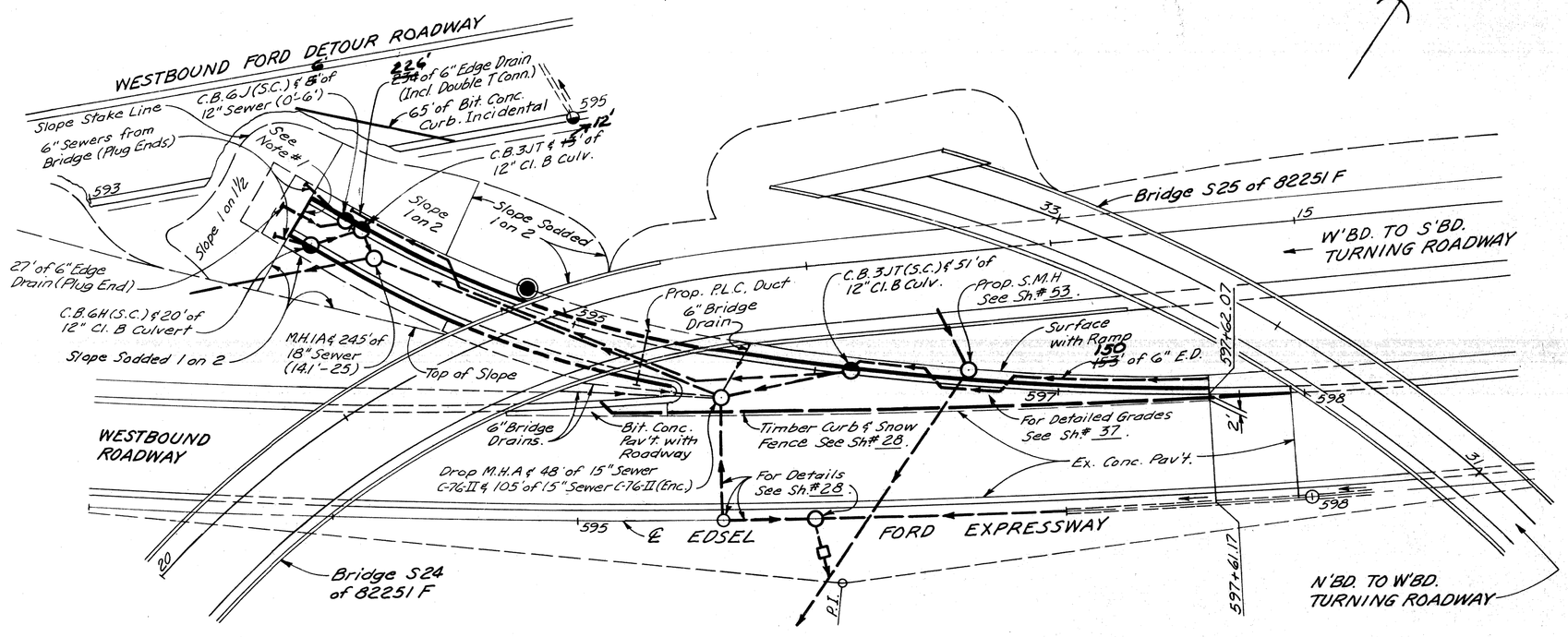

PLAN
Scale: 1" = 40'

BEAUBIEN EXIT RAMP

Notes:

For Alignment See Sh.# 20 & 21

For Grading See Sh.# 18.

For Log of Borings (Symbol ◉) See. Bridge S25 of 82251 F Bridge S27 of 82251 F

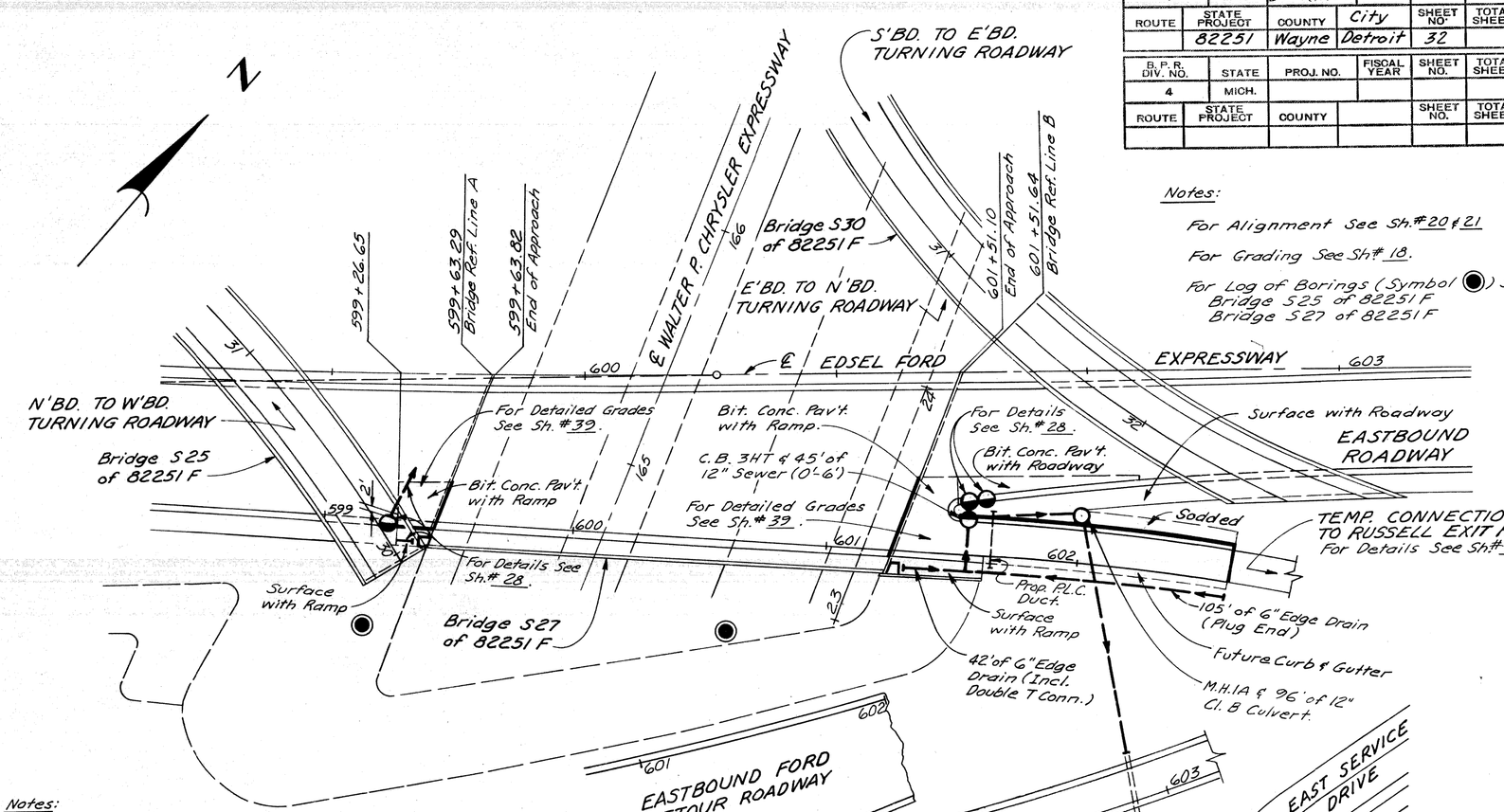

Notes:

Bridge Header Detail 21

Bridge S 27 of 82251 F
20' at West Approach
36' at East Approach

PLAN
Scale: 1" = 40'

RUSSELL EXIT RAMP

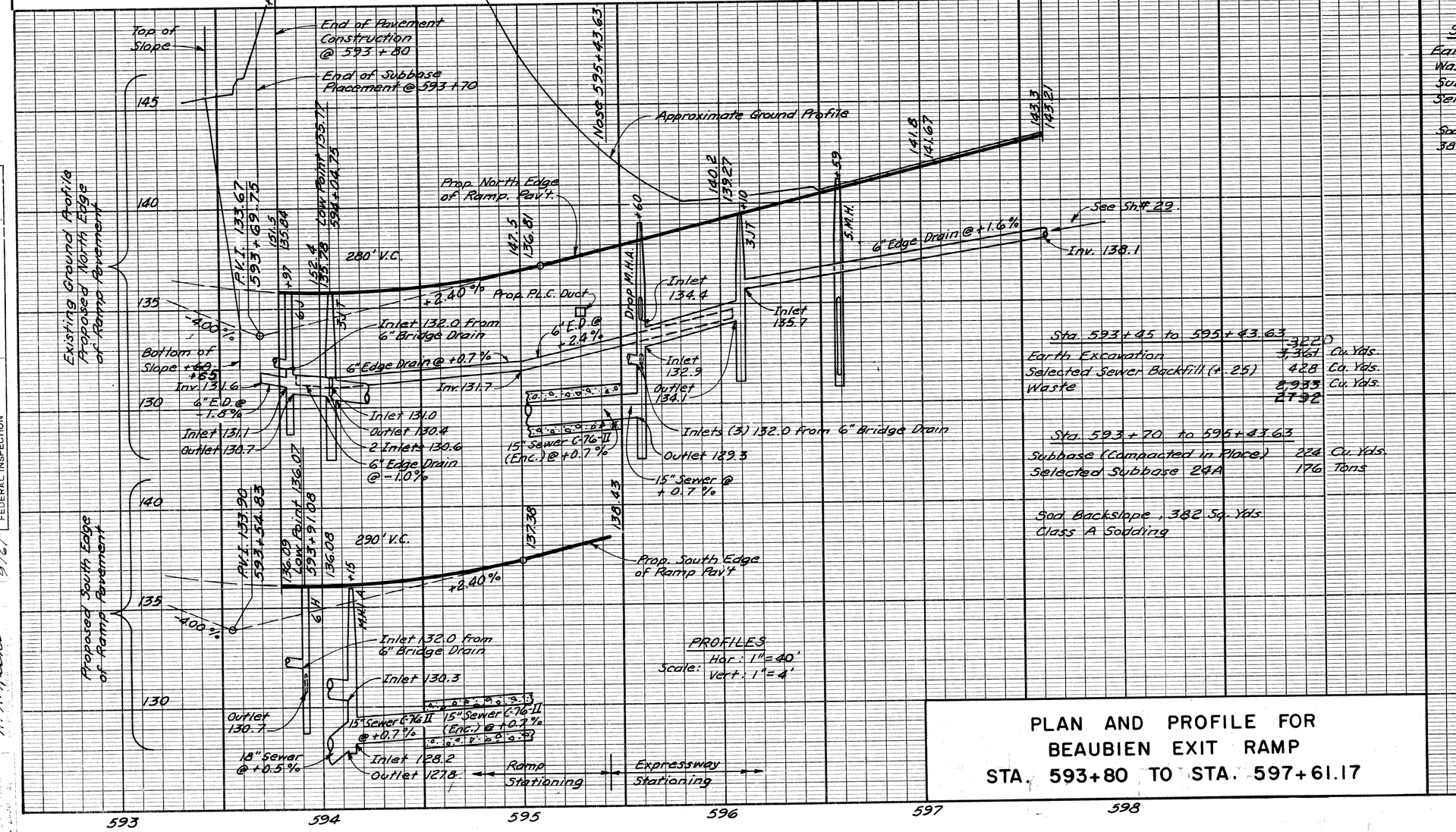

Sta. 593+45 to 595+43.63

Earth Excavation	322	Cu. Yds.
Selected Sewer Backfill (+.25)	428	Cu. Yds.
Waste	2,982	Cu. Yds.

Sta. 593+70 to 595+43.63

Subbase (Compacted in Place)	224	Cu. Yds.
Selected Subbase 21A	176	Tons

Sod Backslope, 382 Sq. Yds. Class A Sodding

PLAN AND PROFILE FOR BEAUBIEN EXIT RAMP
STA. 593+80 TO STA. 597+61.17

Sta. 601+38.39 to 602+60

Earth Excavation	133	Cu. Yds.
Waste	133	Cu. Yds.
Subbase (Compacted in Place)	143	Cu. Yds.
Selected Subbase 21A	114	Tons

Sod Backslope, North Side 38 Sq. Yds. Class A Sodding

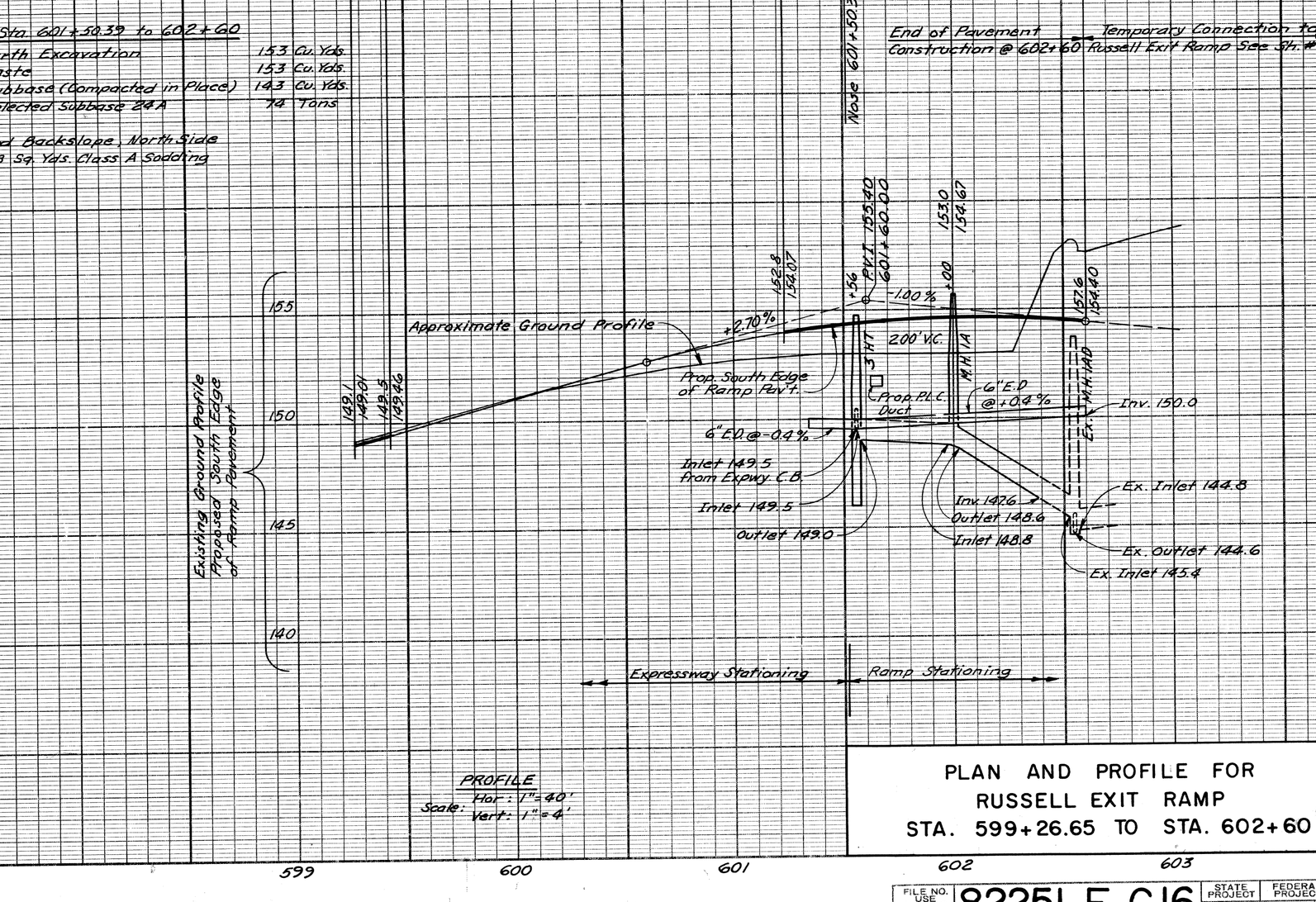

PLAN AND PROFILE FOR RUSSELL EXIT RAMP
STA. 599+26.65 TO STA. 602+60

WICKEY / KEYDER
WOLVERINE
WOLCAN
PLATER
Alice E. Rogers
A. M. Fields

FILE NO. USE NO. 350 STENCIL	STATE PROJECT	FEDERAL PROJECT	SHEET NO.
82251 F C16	82251	F-13-1(193)358	32

PLANS PREPARED BY
CITY OF DETROIT
DEPARTMENT OF PUBLIC WORKS
CITY ENGINEERING DIVISION
BUREAU OF HIGHWAYS AND TRAFFIC WAYS

OPERATION	BY	DATE
PRELIMINARY R.O.W. CHECKED		
FINAL DESIGN		
FINAL DESIGN CHECKED		
TRACED		
FINAL R.O.W. CHECK		
QUANTITIES		
QUANTITIES CHECKED		
SQUAD		

OPERATION	BY	DATE
SURVEYED		
PLOTTED		
PLAN CHECKED		
PROFILE PLOTTED		
PROFILE CHECKED		
PRELIMINARY CHECK		
GRADE INSPECTION		
FEDERAL INSPECTION		

WICKEY	9/61				
KAWVAS	9/61				
SMITS / WOLKAN	9/61				
KAWVAS	9/61				
Adam L. Rogers	9/61				
A. A. Heide	9/61				

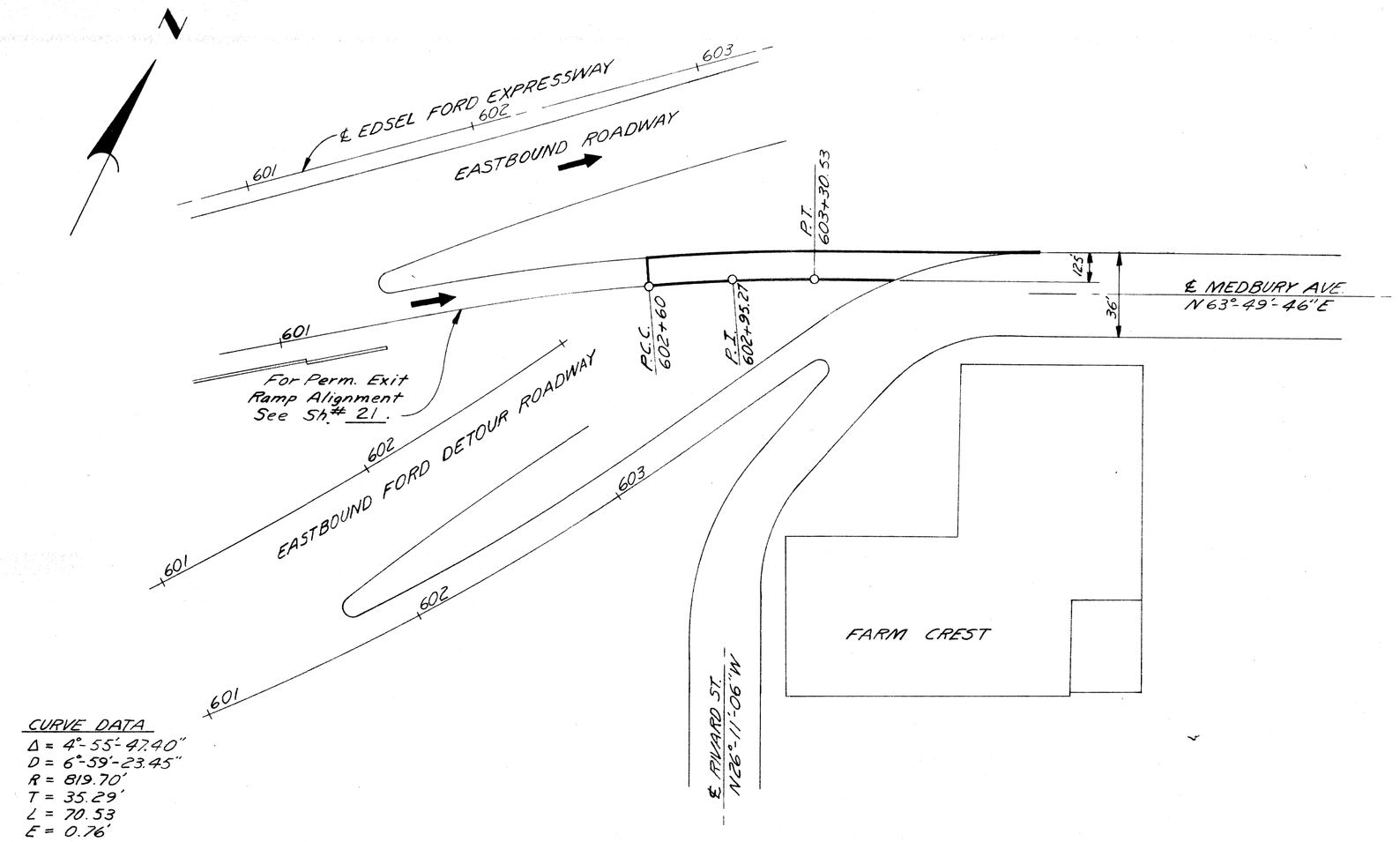

CURVE DATA
Δ = 4°-55'-42.40"
D = 6°-59'-23.45"
R = 819.70'
T = 35.29'
L = 70.53
E = 0.76'
P.C.C. = 602+60
P.I. = 602+95.27
P.T. = 603+30.53
N58°-53'-58.60"E Forward Tangent
N63°-49'-46"E Back Tangent

PLAN
Scale: 1"=40'

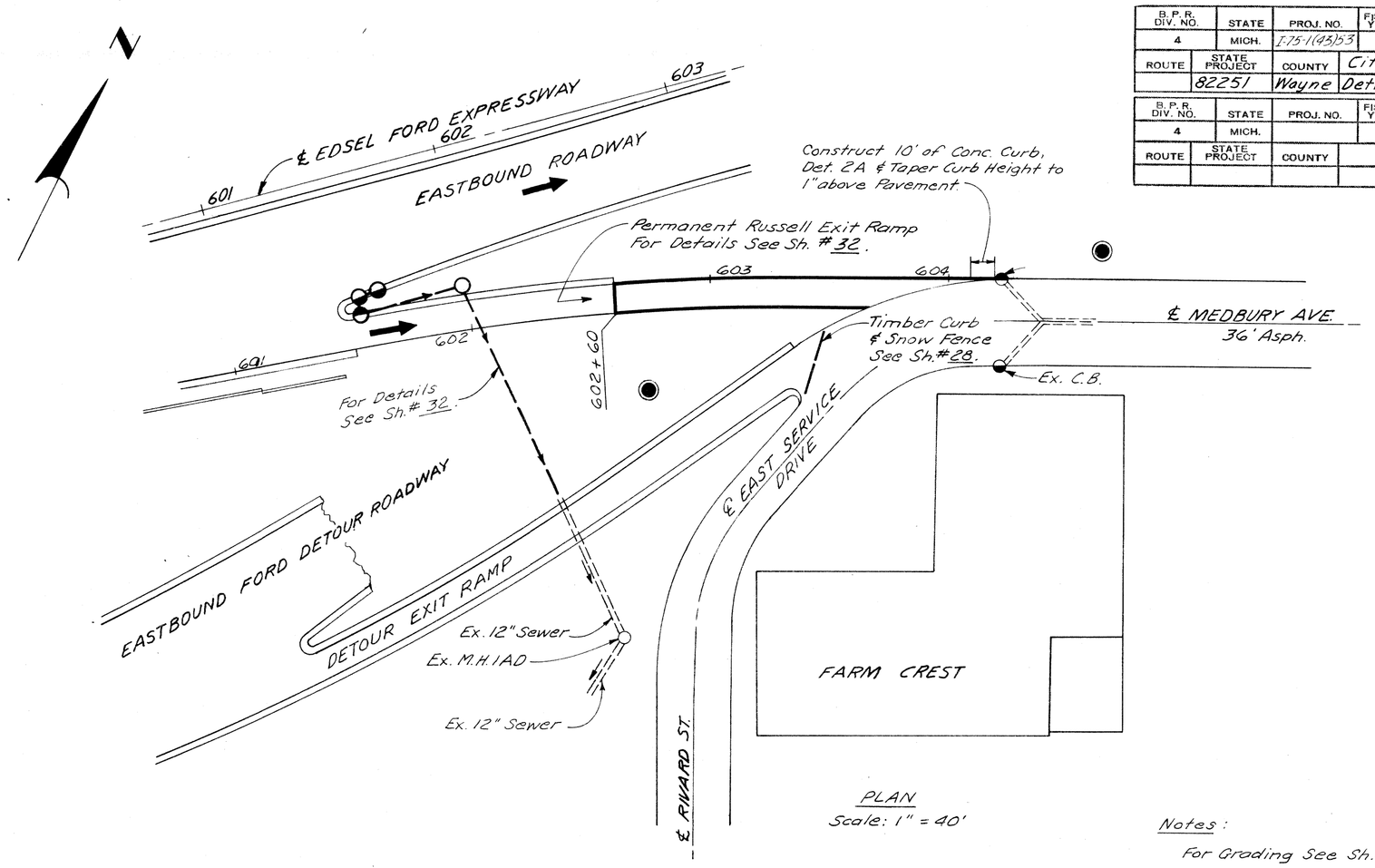

PLAN
Scale: 1" = 40'

Notes:
For Grading See Sh.# 18.
For Log of Borings (Symbol ◉) See Bridge S 30 of 82251 F

B.P.R. DIV. NO.	STATE	PROJ. NO.	FISCAL YEAR	SHEET NO.	TOTAL SHEETS
4	MICH.	I-75-1(145)53			
ROUTE	STATE PROJECT	COUNTY	City	SHEET NO.	TOTAL SHEETS
	82251	Wayne	Detroit	33	

B.P.R. DIV. NO.	STATE	PROJ. NO.	FISCAL YEAR	SHEET NO.	TOTAL SHEETS
4	MICH.				
ROUTE	STATE PROJECT	COUNTY		SHEET NO.	TOTAL SHEETS

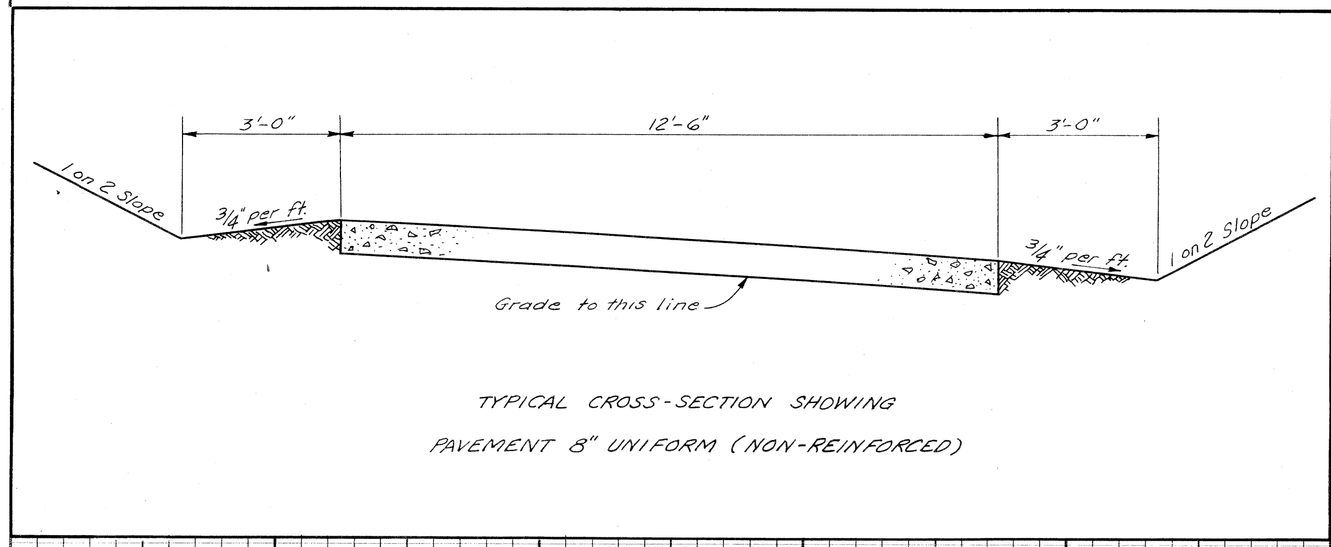

TYPICAL CROSS-SECTION SHOWING
PAVEMENT 8" UNIFORM (NON-REINFORCED)

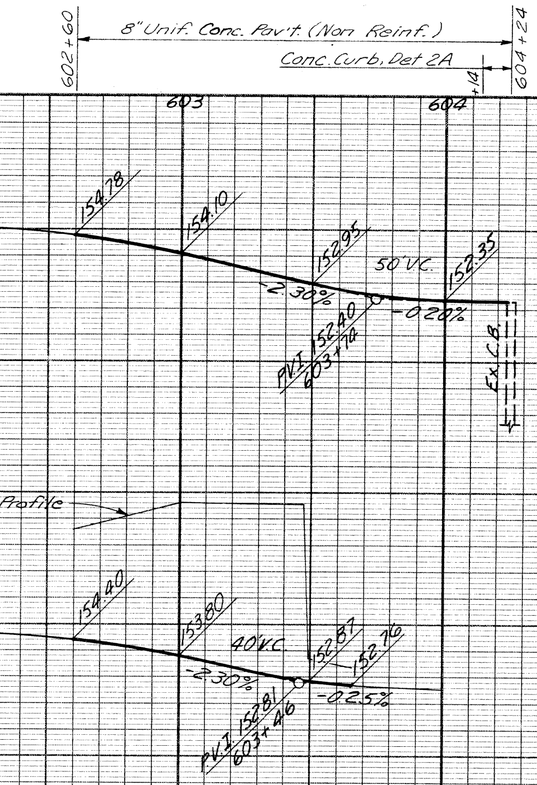

From Sta. 602+60 to 604+24
Excavation 527 Cu Yds.
Waste 527 Cu Yds.

PROFILES
Scale: Hor: 1"=40'
Vert: 1"=4'

PLAN AND PROFILE FOR TEMPORARY CONNECTION TO RUSSELL EXIT RAMP

FILE NO. USE NO. 350 STENCIL	82251 F C16	STATE PROJECT	FEDERAL PROJECT	SHEET NO.
		82251	I-75-1(145)53	33

B. P. R. DIV. NO.	STATE	PROJ. NO.	FISCAL YEAR	SHEET NO.	TOTAL SHEETS
4	MICH.	I-75-1(83)53			
ROUTE	STATE PROJECT	COUNTY	City	SHEET NO.	TOTAL SHEETS
	82251	Wayne	Detroit	34	

PLANS PREPARED BY
CITY OF DETROIT
DEPARTMENT OF PUBLIC WORKS
CITY ENGINEER'S OFFICE
REVISED TO REFLECT CHANGES AND ADDITIONS

OPERATION	BY	DATE
PRELIMINARY R.O.W. CHECKED		
FINAL DESIGN		
FINAL DESIGN CHECKED		
TRACED		
FINAL R.O.W. CHECK		
QUANTITIES		
QUANTITIES CHECKED		
SQUAD		

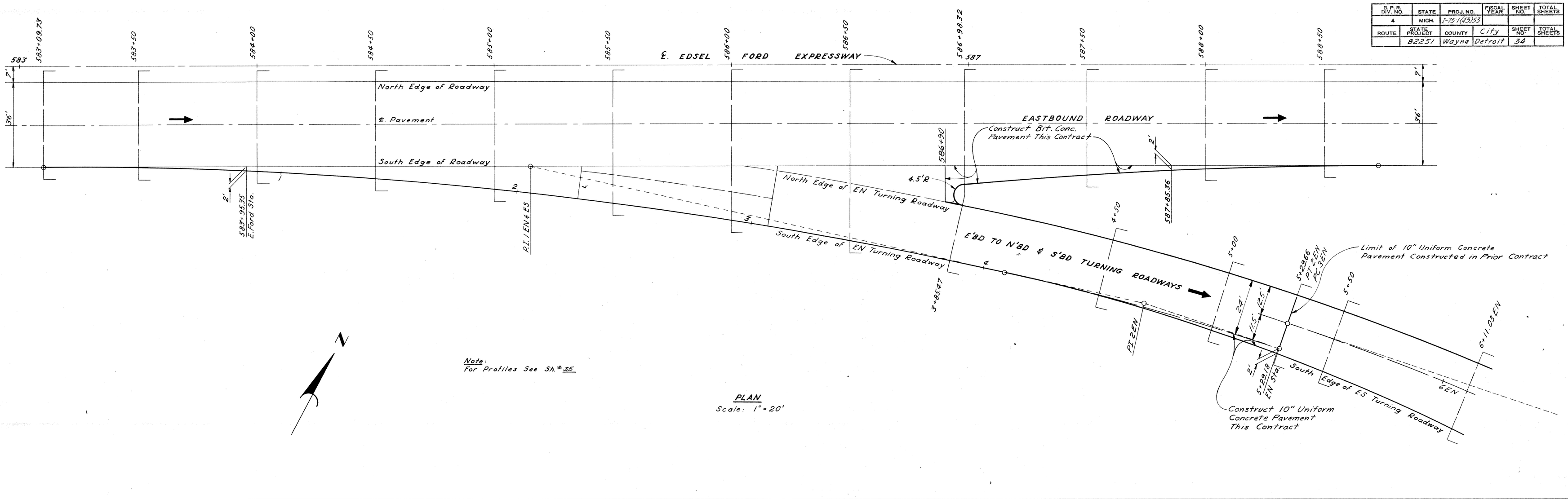

Note:
For Profiles See Sh.# 35

PLAN
Scale: 1" = 20'

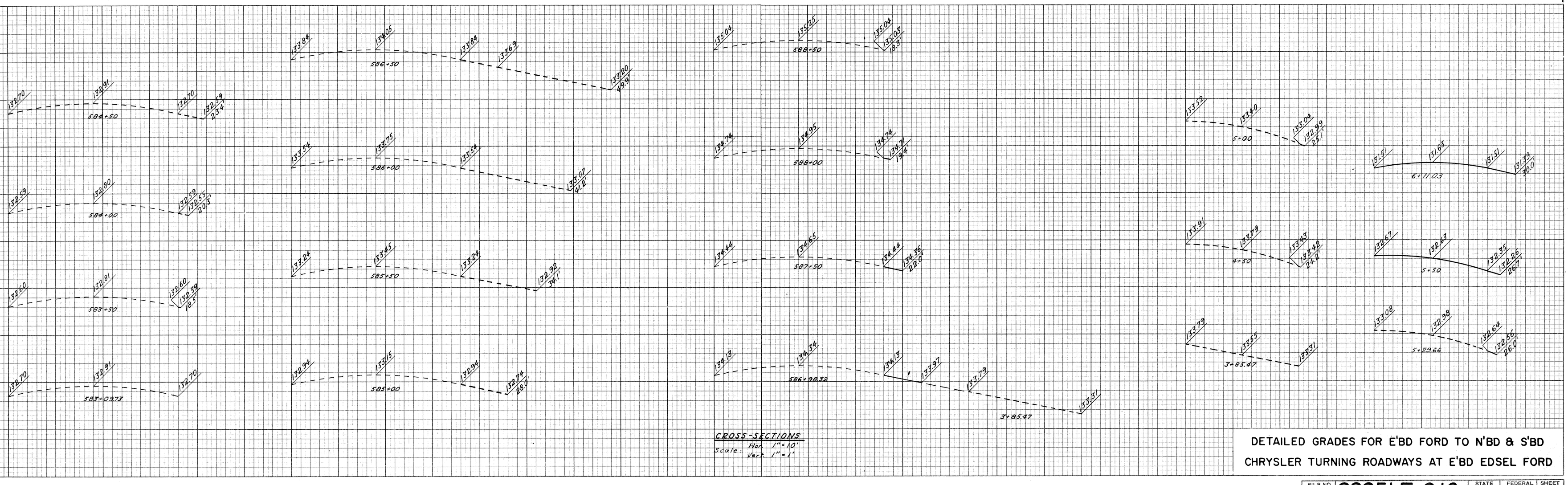

CROSS-SECTIONS
Scale: Hor. 1" = 10'
Vert. 1" = 1'

DETAILED GRADES FOR E'BD FORD TO N'BD & S'BD
CHRYSLER TURNING ROADWAYS AT E'BD EDSEL FORD

SQUAD LEADER		
DRAWN BY	NICKEY	9/61
TRACED BY	WICKEY / BREED	9/61
CHECKED BY	KOSKEY	9/61
CORRECT	NICKEY	9/61
RECOMMENDED FOR APPROVAL	[illegible]	9/61

FILE NO. USE ONLY IF NO MICROSTENCIL	82251 F C16	STATE PROJECT	FEDERAL PROJECT	SHEET NO.
		82251	I-75-1(83)53	34

B. P. R. DIV. NO.	STATE	PROJ. NO.	FISCAL YEAR	SHEET NO.	TOTAL SHEETS
4	MICH.	I 25-1(183)53			
ROUTE	STATE PROJECT	COUNTY	City	SHEET NO.	TOTAL SHEETS
	82251	Wayne	Detroit	35	

BASE PREPARED BY
CITY OF DETROIT
DEPARTMENT OF PUBLIC WORKS
CITY ENGINEER'S OFFICE
BUREAU OF HIGHWAYS AND EXPRESSWAYS

	DATE
BY	
PLOTTED	
COMPUTED	
CHECKED	

SQUAD LEADER	WICKEY
DRAWN BY	RAZER / KENDLER
TRACED BY	SMITS
FIELD BY	KENDLER
CHECKED BY	Edsel & Ford
CONTRACT	
RECOMMENDED FOR APPROVAL	H. H. Klahn

9/61 9/61 9/61 9/61

583 584 585 586 587 588

132.70 132.60 132.59 132.70 132.94 133.24 133.54 133.84 134.13 134.44 134.74 135.04 North Edge of Roadway

132.91 132.81 132.80 132.91 133.15 133.45 133.75 134.03 134.34 134.65 134.95 135.25 ℄ Pavement

-0.60%

PVI. 132.55
584+00

200' V.C.

+0.60%

132.70 132.60 132.59 132.70 132.94 133.24 133.54 133.58 133.84 134.13 134.44 134.74 135.04 South Edge of Roadway

North Edge of EN Turning Roadway

133.58 133.69 133.79 Nose

132.70 132.59 132.55 132.59 132.74 132.92 133.07 133.20 133.31 South Edge of EN Turning Roadway

South Edge of ES Turning Roadway

133.31 133.42 132.99 132.56 132.26 131.39

4+09.12

133.79 Nose

133.91 133.52 133.08 132.67 131.51

-0.02'/ft.

-0.08'/ft.

64.53' Crown Transition

100' Superelevation Transition

Future Pavement

Future Pavement

133.31 133.43 133.44 132.64

PVI 133.61
4+60.22

100' V.C.

+0.60%

5+29.66
132.66 132.63 131.63

PROFILES
Scale: Hor. 1"=20'
Vert. 1"=2'

For Plan & Cross-Sections
See Sh. # 34.

DETAILED GRADES FOR E'BD FORD TO N'BD & S'BD
CHRYSLER TURNING ROADWAYS AT E'BD EDSEL FORD

FILE NO. USE NO. TSD STENCIL	STATE PROJECT	FEDERAL PROJECT	SHEET NO.
82251 F C16	82251	I 75-1(183)53	35

B.P.R. DIV. NO.	STATE	PROJ. NO.	FISCAL YEAR	SHEET NO.	TOTAL SHEETS
4	MICH.	F251(43)53			
ROUTE	STATE PROJECT	COUNTY	City	SHEET NO.	TOTAL SHEETS
	82251	Wayne	Detroit	36	

WICKEY KENDLER 9/61
PLATER/KENDLER 9/61
SMITS 9/61
KENDLER 9/61
Allan E. Page 9/61
R. R. Hicks 9/61

PLOTTED		
COMPUTED		
CHECKED		
	BY	DATE

PLANS PREPARED BY CITY OF DETROIT DEPARTMENT OF PUBLIC WORKS CITY ENGINEER'S OFFICE BUREAU OF HIGHWAYS AND EXPRESSWAYS

DETAILED GRADES FOR N'BD. & S'BD. TO W'BD. TURNING ROADWAYS AT WESTBOUND ROADWAY

FILE NO. U.S. NO. 350 STENCIL	82251 F C16	STATE PROJECT	FEDERAL PROJECT	SHEET NO.
		82251	F251(43)53	36

B.P.R. DIV. NO.	STATE	PROJ. NO.	FISCAL YEAR	SHEET NO.	TOTAL SHEETS
4	MICH.	2-75-1(43)55			
ROUTE	STATE PROJECT	COUNTY	City	SHEET NO.	TOTAL SHEETS
	82251	Wayne	Detroit	37	

PLOTTED		
COMPUTED		
CHECKED		

WICKEY / KENDLER 9/61
WICKEY 9/61
SMITS 9/61
KENDLER 9/61

DETAILED GRADES FOR BEAUBIEN
EXIT RAMP AT WESTBOUND ROADWAY

FILE NO. USE NO. 350 STENCIL **82251 F C16** STATE PROJECT 82251 FEDERAL PROJECT 2-75-1(43)55 SHEET NO. 37

PLANS PREPARED BY
CITY OF DETROIT
DEPARTMENT OF PUBLIC WORKS
CITY ENGINEER'S OFFICE
BUREAU OF HIGHWAYS AND EXPRESSWAYS

B. P. R. DIV. NO.	STATE	PROJ. NO.	FISCAL YEAR	SHEET NO.	TOTAL SHEETS
4	MICH.	I-75-1(43)53			
ROUTE	STATE PROJECT	COUNTY	City	SHEET NO.	TOTAL SHEETS
	82251	Wayne	Detroit	38	

PLOTTED	DATE
COMPUTED	BY
CHECKED	

WICKEY / NEWLER		9/61
WICKEY / NEWLER		9/61
SMITS		9/61
NEWLER		9/61
Richard E. Wagner		9/61
H. M. Hurst		9/61

593+50: 136.12, 136.26

593+00: 137.03, 136.99

592+50: 138.51, 138.27

592+00: 140.46, 140.09

595+43.63: 137.85, 138.43, 138.91, 6.0, 139.19, 139.78, 139.95

595+38

595+00: 136.81, 137.38, 138.56, 3.0, 138.69, 139.28, 139.45

594+50: 136.01, 136.45, 138.09, 1.0, 138.12, 138.71, 138.88

594+00: 135.78, 136.08, 137.65, 138.24, 138.41

598+00: 144.18, 0.8, 144.21, 144.80, 144.97

597+50: 142.93, 2.5, 143.04, 143.63, 143.80

597+00: 141.67, 6.3, 141.97, 142.56, 142.73

596+50: 140.46, 1.3, 141.00, 141.59, 141.76

596+00: 139.27, 18.0, 139.82, 140.13, 140.72, 140.89

CROSS-SECTIONS
Scale: Hor: 1" = 10'
Vert: 1" = 1'

Note:
For Plan and Profiles See Sh # 37.

DETAILED GRADES FOR BEAUBIEN EXIT RAMP AT WESTBOUND ROADWAY

FILE NO. USE NO. 350 STENCIL	82251 F C16	STATE PROJECT	FEDERAL PROJECT	SHEET NO.
		82251	I-75-1(43)53	38

DETAILED GRADES FOR RUSSELL EXIT RAMP AT EASTBOUND ROADWAY

B.P.R. DIV. NO.	STATE	PROJ. NO.	FISCAL YEAR	SHEET NO.	TOTAL SHEETS
4	MICH.	I-75-1(43)53			
ROUTE	STATE PROJECT	COUNTY	City	SHEET NO.	TOTAL SHEETS
	82251	Wayne	Detroit	39	

B.P.R. DIV. NO.	STATE	PROJ. NO.	FISCAL YEAR	SHEET NO.	TOTAL SHEETS
4	MICH.				
ROUTE	STATE PROJECT	COUNTY		SHEET NO.	TOTAL SHEETS

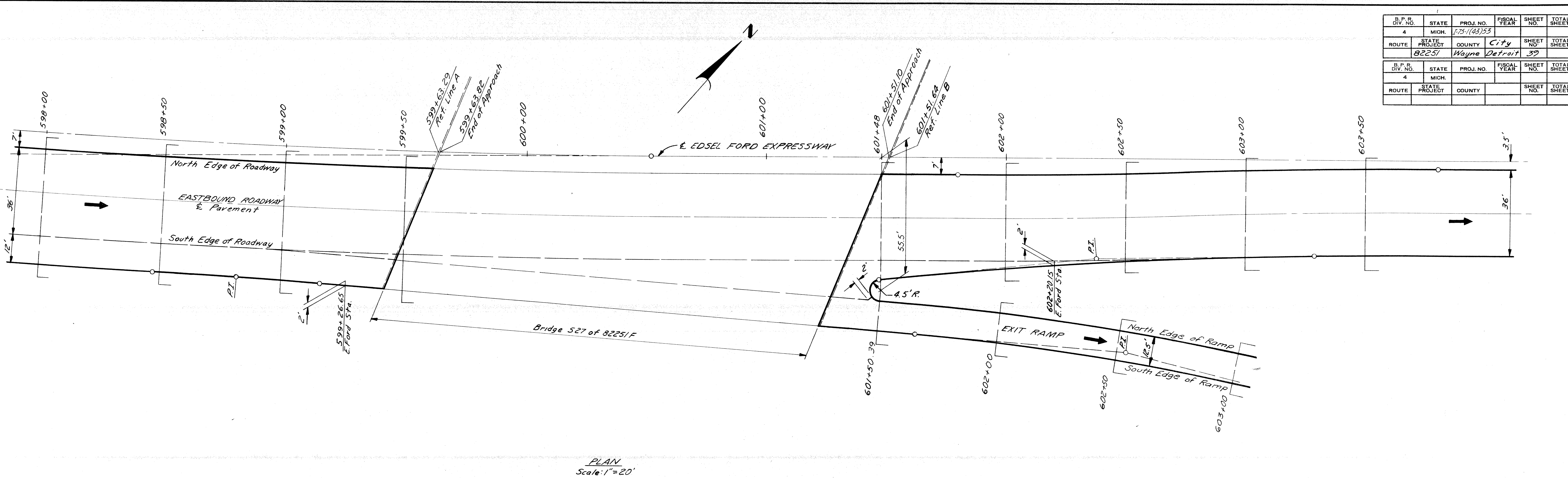

PLAN
Scale: 1"=20'

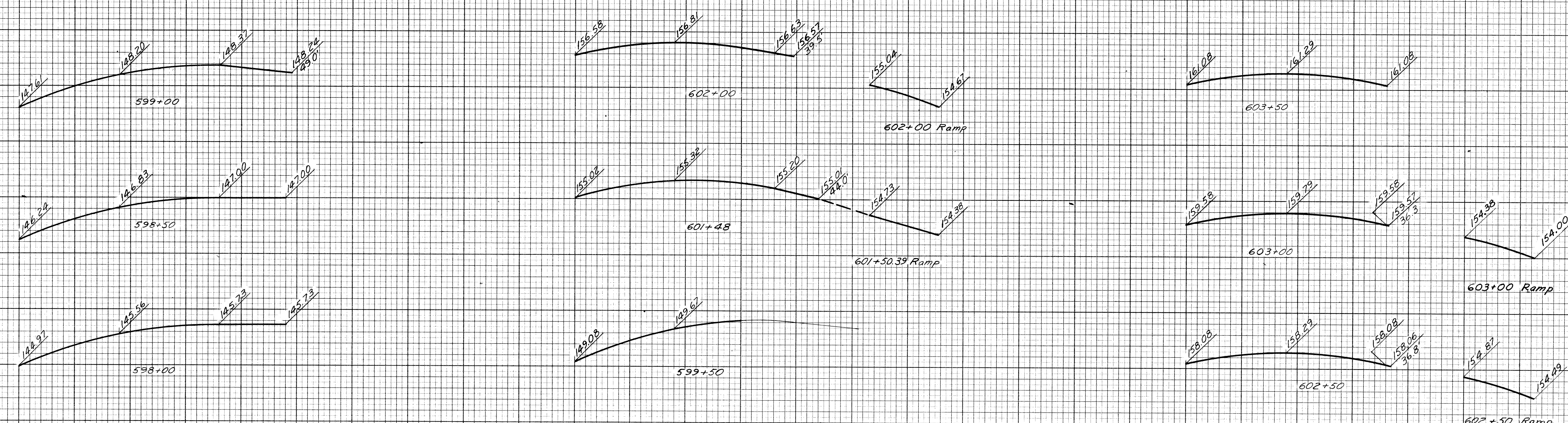

CROSS - SECTIONS
Scale: Hor: 1"=10'
Vert 1"=1'

Note: For Profiles See Sh.# 40

OPERATION	BY	DATE
PRELIMINARY R.O.W. CHECKED		
FINAL DESIGN		
FINAL DESIGN CHECKED		
TRACED		
FINAL R.O.W. CHECK		
QUANTITIES		
QUANTITIES CHECKED		
SQUAD		

PLANS PREPARED BY
CITY OF DETROIT
DEPARTMENT OF PUBLIC WORKS
CITY ENGINEERS OFFICE
BUREAU OF HIGHWAYS AND EXPRESSWAYS

OPERATION	BY	DATE
SURVEYED		
PLAN PLOTTED		
PLAN CHECKED		
PROFILE PLOTTED		
PROFILE CHECKED		
PRELIMINARY GRADE		
GRADE INSPECTION		
FEDERAL INSPECTION		

WICKEY 9/61
KENDLER / KOSKI 9/61
SMITS 9/61
KENDLER 9/61
[illegible] 9/61
R.R. Hicks 9/61

FILE NO. USE NO. 350 STENCIL 82251 F C16

STATE PROJECT	FEDERAL PROJECT	SHEET NO.
82251	I-75-1(43)53	39

S.P.R. DIV. NO.	STATE	PROJ. NO.	FISCAL YEAR	SHEET NO.	TOTAL SHEETS
4	MICH.	I-75-1(63)33			
ROUTE	STATE PROJECT	COUNTY		SHEET NO.	TOTAL SHEETS
	82251	Wayne	City of Detroit	40	

598 599 600 Edsel Ford Stationing 601 602 603

600' V.C.

144.97 146.24 147.61 149.08

149.67 148.20 146.83 145.56

148.37 147.00 145.73

148.24 147.00 145.73

300' of Superelevation Transition

Rate of Superelevation = .021 Ft/Ft.

+ 5.92

r = .021

r = 0

+ 3.00%

155.02 156.50 158.08 159.58 161.08

& Pavement

155.32 156.81 158.29 159.79 161.29

South Edge of Roadway

155.30 156.63 158.08 159.58 161.08

North Edge of Ramp

154.73 Nose 154.73 Nose 155.04 154.87 154.38

South Edge of Ramp

+2.70% P.V.I. 155.40 601+60 -1.0% 154.67 154.49 154.00

154.38 Nose 154.38 Nose 200' V.C.

PROFILES
Scale: Hor: 1" = 20'
Vert: 1" = 2'

602 Ramp Stationing 603

Note:
For Plan and Cross Sections See Sh# 32.

DETAILED GRADES FOR RUSSELL
EXIT RAMP AT EASTBOUND ROADWAY

FILE NO. USE NO. 350 STENCIL	STATE PROJECT	FEDERAL PROJECT	SHEET NO.
82251 F C16	82251	I-75-1(63)33	40

SUBMITTED FOR APPROVAL
DEPARTMENT OF ENGINEERING
CITY OF DETROIT
SIGNED: [illegible]
DATE: [illegible]

BY	DATE
PLOTTED	
COMPUTED	
CHECKED	

WICKER	9/61
KENDLER / KOSKI	9/61
SMITS	9/61
KENDLER	9/61
[illegible]	9/61

B.P.R. DIV. NO.	STATE	PROJ. NO.	FISCAL YEAR	SHEET NO.	TOTAL SHEETS
4	MICH.	I-75-1(163)153			
ROUTE	STATE PROJECT	COUNTY		SHEET NO.	TOTAL SHEETS
	82251	Wayne	City Detroit	41	

B.P.R. DIV. NO.	STATE	PROJ. NO.	FISCAL YEAR	SHEET NO.	TOTAL SHEETS
4	MICH.				
ROUTE	STATE PROJECT	COUNTY		SHEET NO.	TOTAL SHEETS

UTILITY LEGEND

UNDERGROUND

- Fire Protection Line
- Sewer & Manhole
- Sewer Inlet or Catch Basin
- Watermain & Gate Well & Valve
- Water Gate & Box
- P.L.C. Cable & Manhole
- P.L.C. Handhole
- Detroit Edison Co. Cable & Manhole
- M.B.T. Cable & Manhole
- Telegraph Cable & Manhole
- Gas Main & Valve or Drip
- D.F.D. Cable & Manhole
- Indicates Utility Abandoned-This Contract
- Indicates Utility Abandoned-Prior Contract

ABOVE GROUND

- D.S.R. Pole
- M.B.T. Pole
- Traffic Signal or R.R. Flasher
- D.F.D. Alarm Box
- Fire Hydrant
- D.E. Pole
- P.L.C. Pole (Without Light)
- P.L.C. Lightpole
- Police Box
- Traffic Signal Box

N

MEDBURY AVE.
NORTH SERVICE DRIVE
ST. ANTOINE ST. 50 FT. WD.
20 FT. ALLEY
WESTBOUND FORD DETOUR ROADWAY
BEAUBIEN EXIT RAMP
EDSEL FORD EXPRESSWAY
Bridge B25 of 82251 F
Bridge S24 of 82251 F
Bridge S21 of 82251 F
SOUTH SERVICE DRIVE
BEAUBIEN ENTRANCE RAMP
EASTBOUND FORD DETOUR ROADWAY
DETOUR EXIT RAMP TO BEAUBIEN
DETOUR ENTRANCE RAMP FROM BEAUBIEN
BEAUBIEN ST. 50 FT. WD.
HENDRIE AVE. 60 FT. WD.
HASTINGS ST. 50 FT. WD.
18 FT. ALLEY
9'6" Tunnel

GENERAL UTILITY DRAWING

FILE NO. VAS NO. 330 STENCIL	82251 F C16	STATE PROJECT	FEDERAL PROJECT	SHEET NO.
		82251	I-75-1(163)153	41

B.P.R. DIV. NO.	STATE	PROJ. NO.	FISCAL YEAR	SHEET NO.	TOTAL SHEETS
4	MICH.	I-75-1(93)55			
ROUTE	STATE PROJECT	COUNTY	City	SHEET NO.	TOTAL SHEETS
	82251	Wayne	Detroit	42	

B.P.R. DIV. NO.	STATE	PROJ. NO.	FISCAL YEAR	SHEET NO.	TOTAL SHEETS
4	MICH.				
ROUTE	STATE PROJECT	COUNTY		SHEET NO.	TOTAL SHEETS

WESTBOUND FORD DETOUR ROADWAY

EASTBOUND FORD DETOUR ROADWAY

605 E. EDSEL FORD EXPRESSWAY

DETOUR EXIT RAMP TO BEAUBIEN

BEAUBIEN EXIT RAMP

DETOUR EXIT RAMP TO RUSSELL

RUSSELL EXIT RAMP

S'BD. TO E'BD. TURNING ROADWAY

W'BD. TO S'BD. TURNING ROADWAY

N'BD. TO W'BD. TURNING ROADWAY

Bridge S 29 of 82251 F

Bridge S 30 of 82251 F

Bridge S 25 of 82251 F

Bridge S 24 of 82251 F

Bridge S 27 of 82251 F

20 FT. ALLEY

18 FT. ALLEY

HASTING ST. 50 FT. WD.

MEDBURY AVE. 60 FT. WD.

RUSSELL ST. 60 FT. WD.

RIVARD ST. 50 FT. WD.

HENDRIE AVE 60 FT. WD.

Prop. Fire Protection Line.

Air Valve

Fire Protection Line

7'x7' Conc. F Cap

Prop. 98" Sewer (Comb.)

Prop. 42" Sewer (Comb.)

Prop. 18" Sewer

Prop. 15" Sewer (Enc.)

Prop. 12" Sewer (Enc.)

Prop. P.L.C.

Lamp Hole

6" Water Service

Guy Pole

Power Pole

UTILITY LEGEND

UNDERGROUND

- Fire Protection Line
- Sewer & Manhole
- Sewer Inlet or Catch Basin
- Watermain & Gate Well & Valve
- Water Gate & Box
- P.L.C. Cable & Manhole
- P.L.C. Handhole
- Detroit Edison Co. Cable & Manhole
- M.B.T. Cable & Manhole
- Telegraph Cable & Manhole
- Gas Main & Valve or Drip
- D.F.D. Cable & Manhole
- Indicates Utility Abandoned This Contract
- Indicates Utility Abandoned Prior Contract

ABOVE GROUND

- D.S.R. Pole
- M.B.T. Pole
- Traffic Signal or R.R. Flasher
- D.F.D. Alarm Box
- Fire Hydrant
- D.E. Pole
- P.L.C. Pole (Without Light)
- P.L.C. Lightpole
- Police Box
- Traffic Signal Box

GENERAL UTILITY DRAWING

FILE NO. USE NO. 350 STENCIL	STATE PROJECT	FEDERAL PROJECT	SHEET NO.
82251 F C16	82251	I-75-1(93)55	42

B.P.R. DIV. NO.	STATE	PROJ. NO.	FISCAL YEAR	SHEET NO.	TOTAL SHEETS
4	MICH.	I-75-1(42)53			
ROUTE	STATE PROJECT	COUNTY	CITY	SHEET NO.	TOTAL SHEETS
	82251	Wayne	Detroit		

B.P.R. DIV. NO.	STATE	PROJ. NO.	FISCAL YEAR	SHEET NO.	TOTAL SHEETS
4	MICH.				
ROUTE	STATE PROJECT	COUNTY		SHEET NO.	TOTAL SHEETS

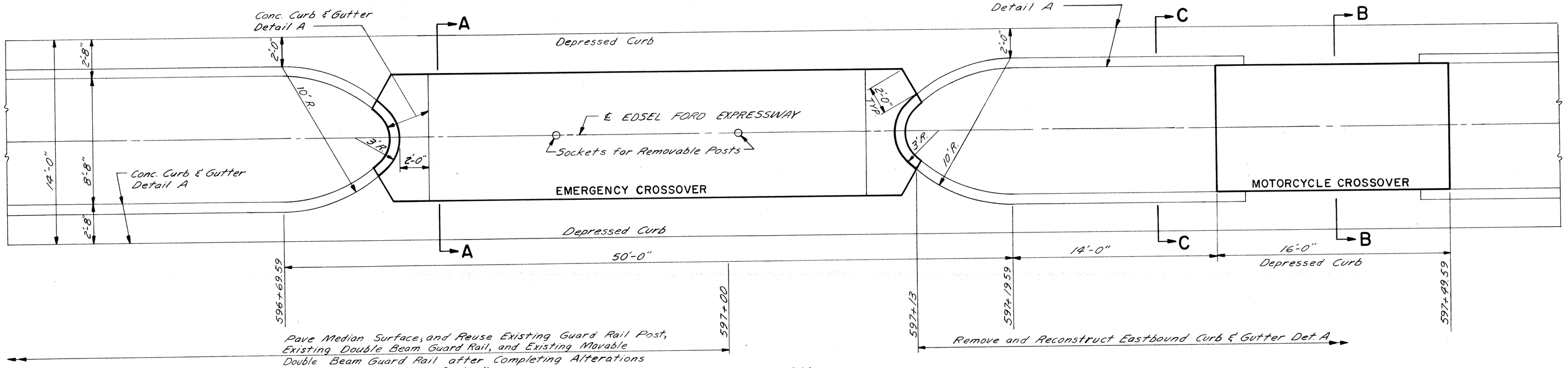

PLAN
Scale : 1" = 4'

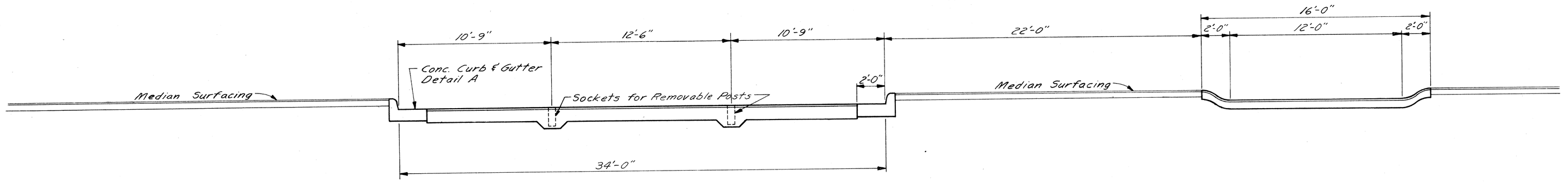

ELEVATION
Scale : 1" = 4'

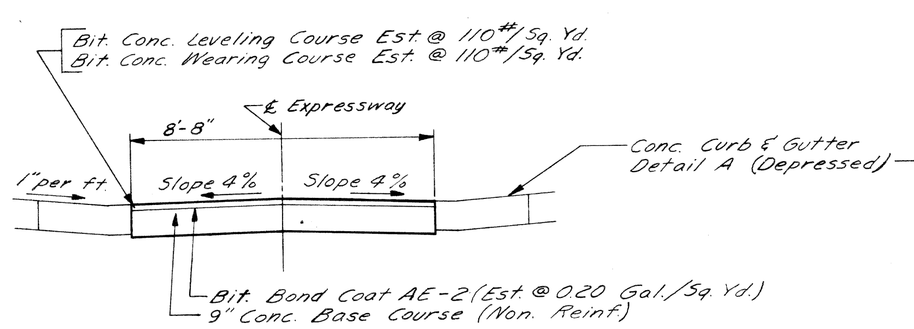

SECTION A-A
Scale : 1" = 3'

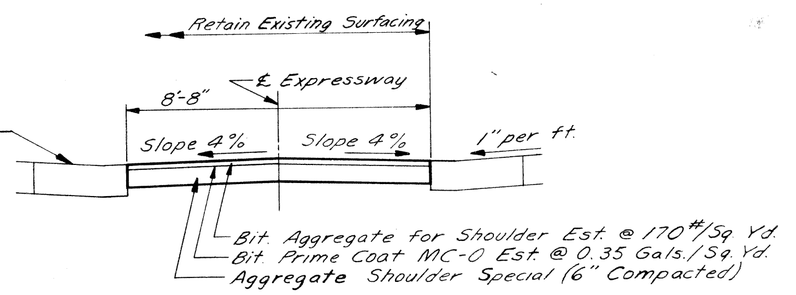

SECTION B-B
Scale : 1" = 3'

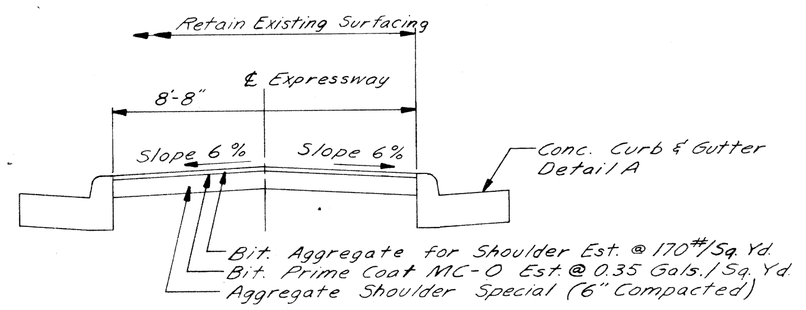

SECTION C-C
Scale : 1" = 3'

NOTE:
For Details of Movable Guard Rail at Emergency Crossing and Guard Rail Opening at Motorcycle Crossing See Sh. Nos. 44 & 45

MEDIAN CROSSOVER PAVING DETAILS

FILE NO. USE NO. 330 STENCIL	STATE PROJECT	FEDERAL PROJECT	SHEET NO.
82251 F C 16	82251	I-75-1(42)53	43

FREDERICK POST CO. 123 200 12-86+

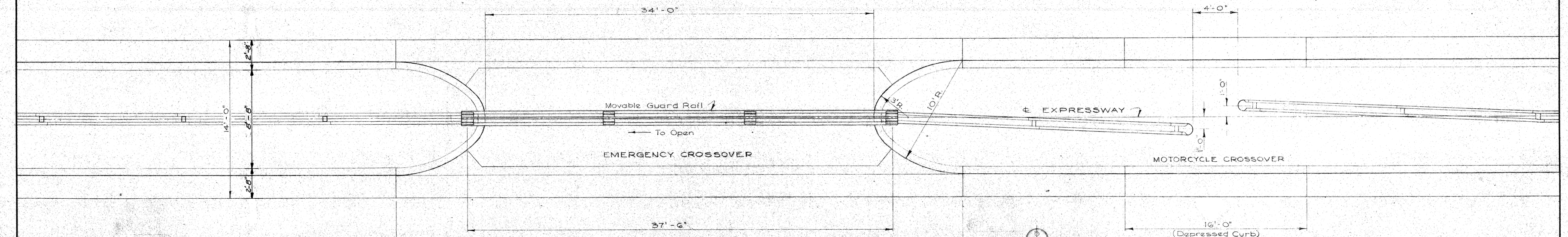

PLAN

Scale: 1" = 4'

For Paving Details of Emergency and Motorcycle Crossovers See Sheet No.

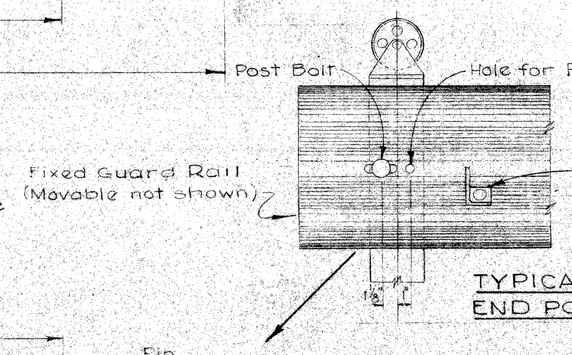

TYPICAL END POST

NOTE: Rollers on the two end and three line posts to be set true to line and grade.
Entire Movable Guard Rail to be assembled and bolted together in place, as a unit, before concrete is poured, to assure proper alignment.

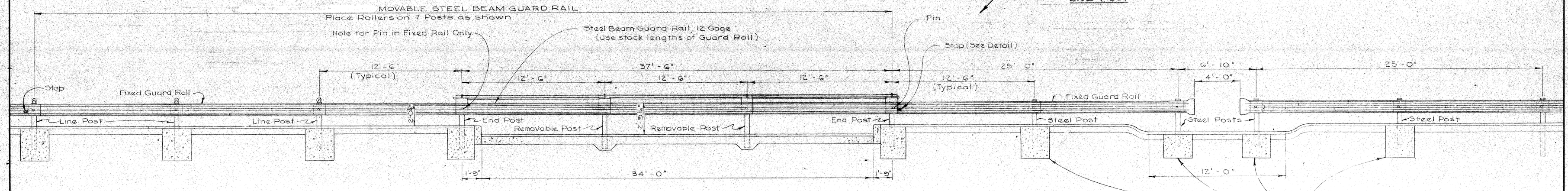

ELEVATION

Scale: 1" = 4'

NOTE: All welds shall be a minimum of ⅛"

Concrete Embedment of these four posts to be considered as incidental to the construction of Double Steel Beam Guard Rail.

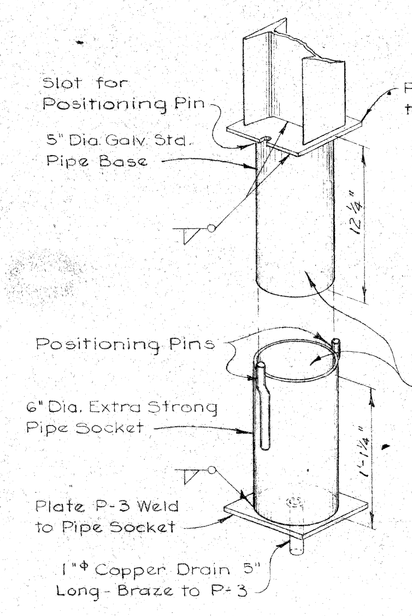

REMOVABLE POST BASE AND SOCKET

No Scale

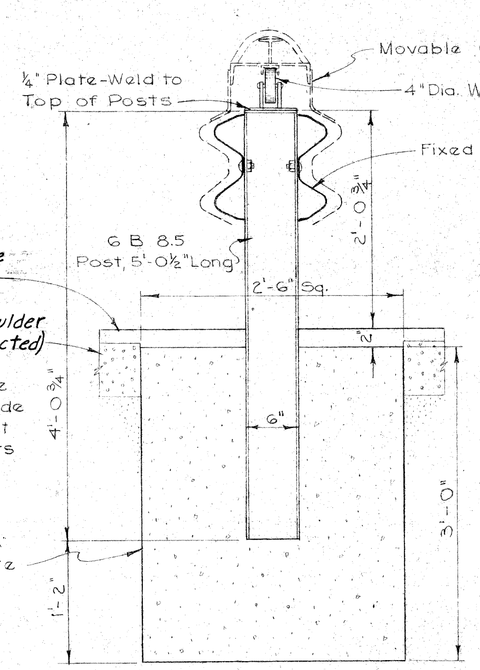

MOVABLE GUARD RAIL END AND LINE POSTS

Scale 1" = 1'-0"

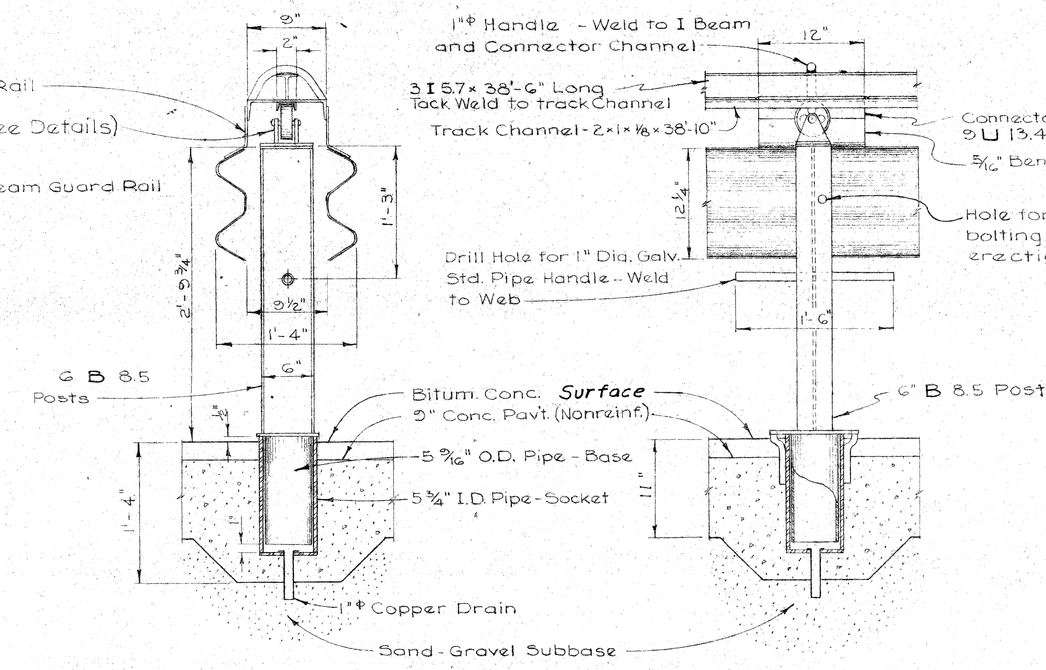

REMOVABLE POST DETAILS

Scale 1" = 1'-0"

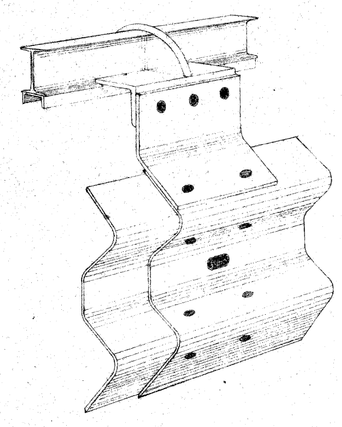

SPLICE DETAIL

No Scale

Note:
Reuse Existing Movable Guard Rail See Sh. # 43.

DETAILS OF MOVABLE GUARD RAIL AT MEDIAN CROSSOVER

82251 F C 16

Sh. No. 44

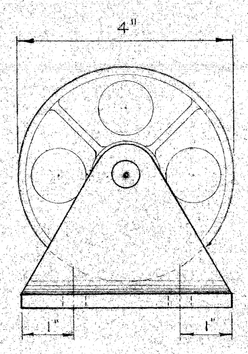

FRONT VIEW

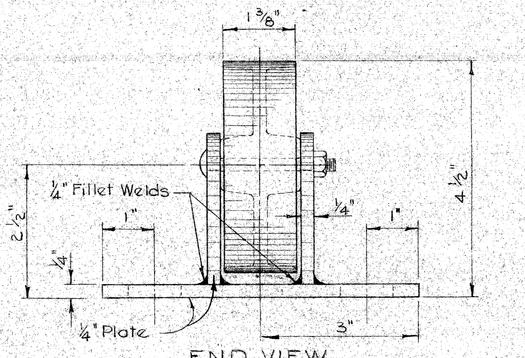

END VIEW

Material: Wheel Casting shall be malleable iron and fitted with roller bearings. Base and brackets shall be made from struct. grade steel.

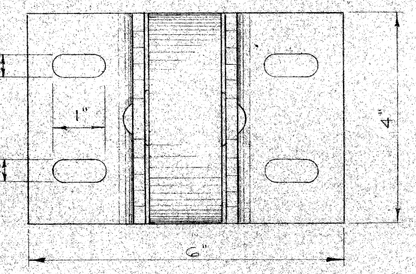

TOP VIEW

DETAILS OF ROLLER-BEARING WHEEL AND BASE
Scale 1"=2"

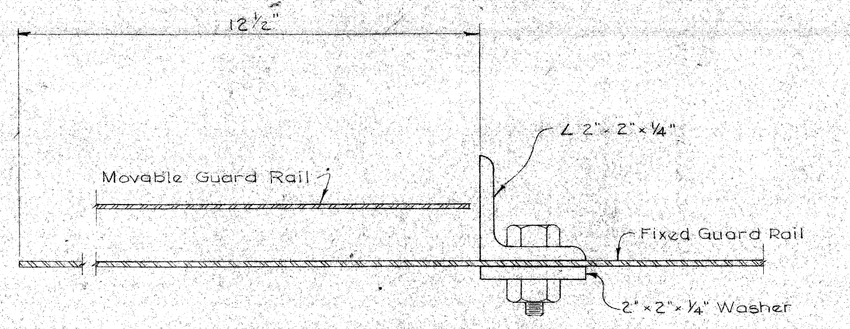

STOP DETAIL
Scale 1"=2"

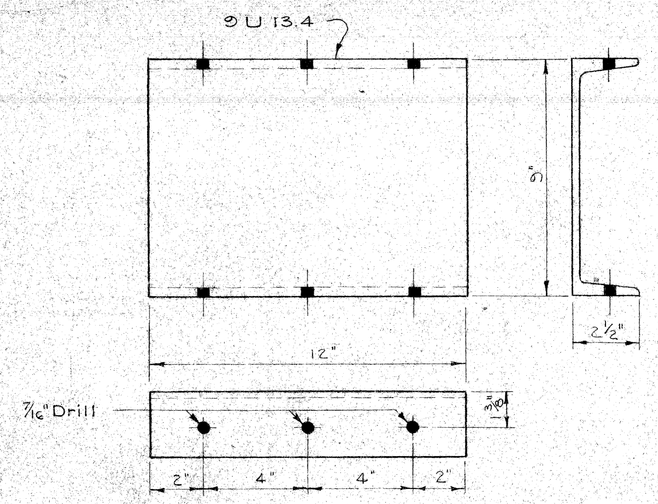

DETAILS OF 9" CHANNEL
Scale 1"=3"

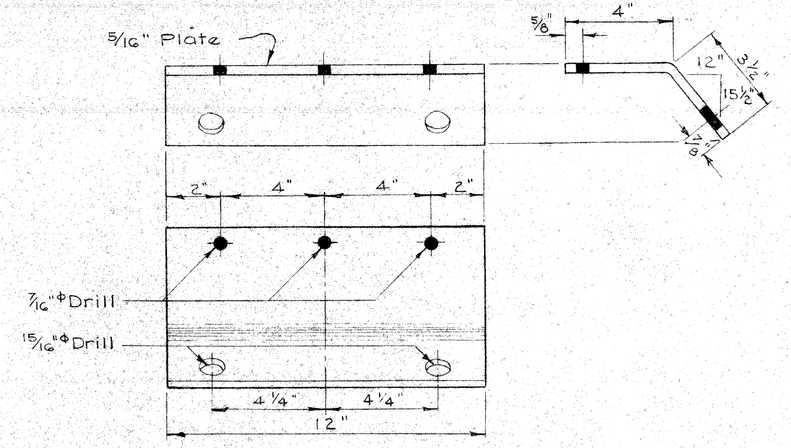

DETAILS OF PLATE P-4
Scale: 1"=3"

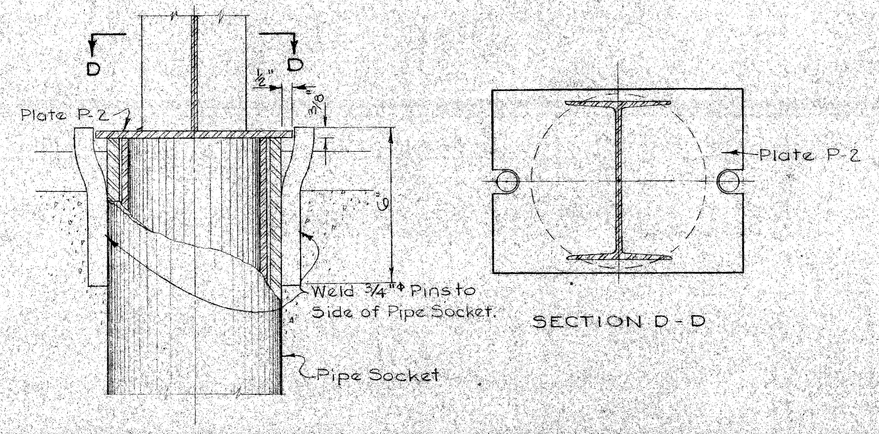

SECTION D-D

DETAILS OF POSITIONING PIN
Scale 1"=3"

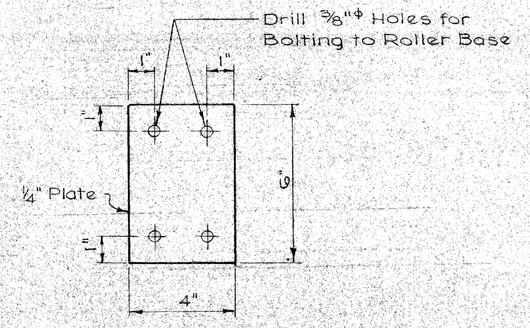

DETAILS OF PLATE P-1
Scale 1"=3"

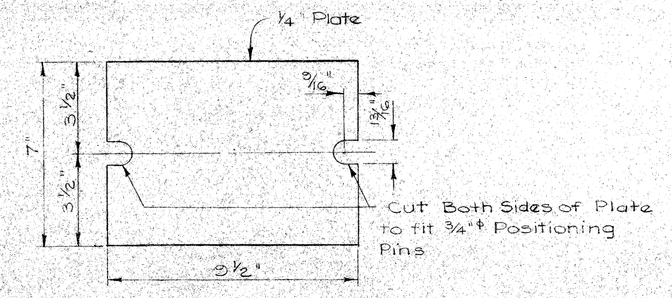

DETAILS OF PLATE P-2
Scale 1"=3"

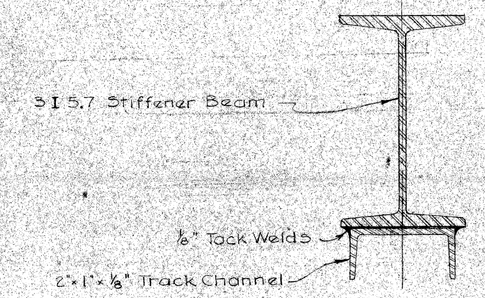

SECTION BETWEEN CONNECTIONS
Scale 1"=2"

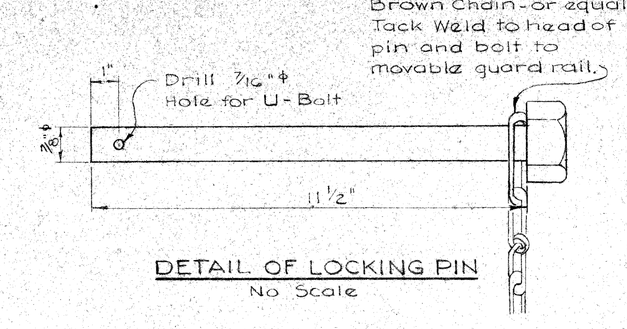

DETAIL OF LOCKING PIN
No Scale

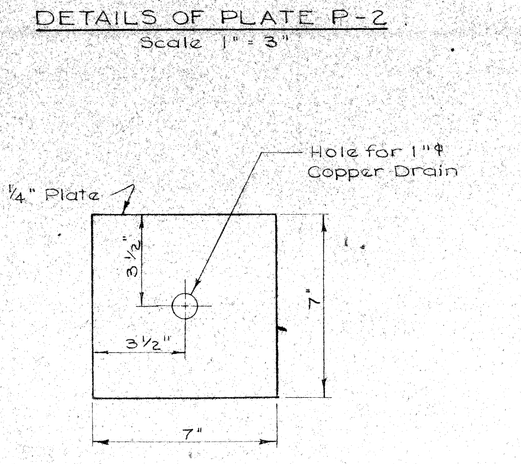

DETAILS OF PLATE P-3
Scale 1"=3"

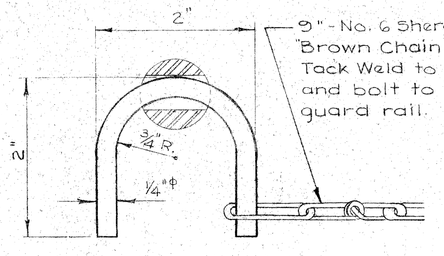

DETAILS OF U-BOLT
No Scale

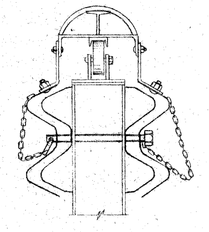

VIEW OF LOCKING PIN AND U-BOLT IN PLACE
Scale 1"=1'-0"

Note:
Reuse Existing Movable Guard Rail See Sh.# 43.

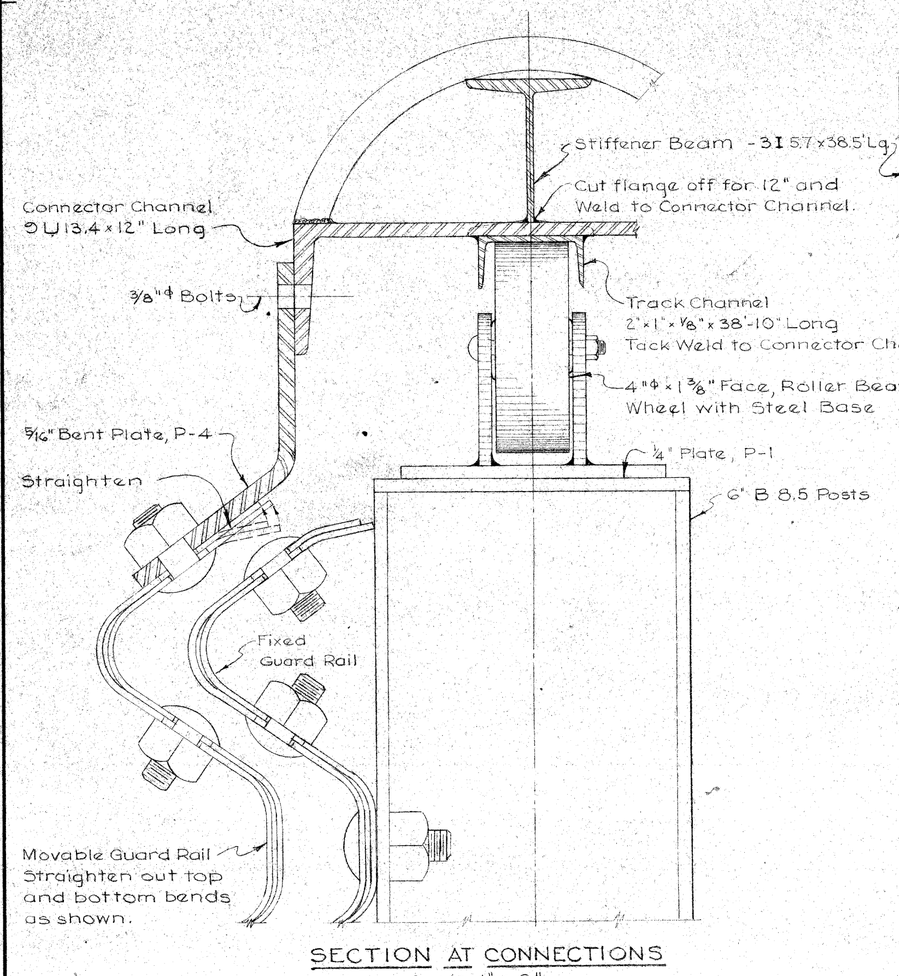

SECTION AT CONNECTIONS
Scale 1"=2"

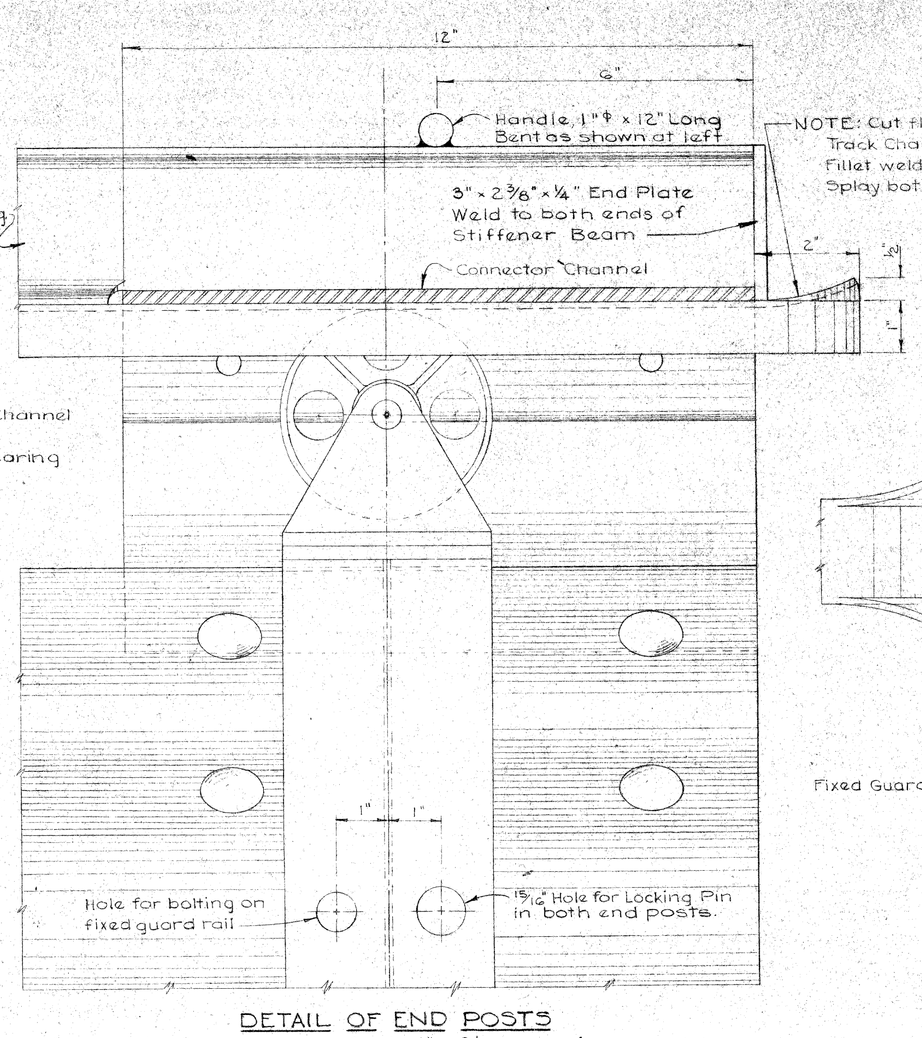

DETAIL OF END POSTS
Scale 1"=2'

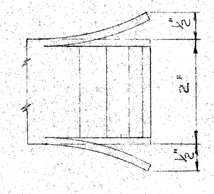

Fixed Guard Rail not shown

NOTES:

Materials, workmanship, and painting shall be in accordance with the Michigan State Highway Department Specifications for Steel Beam Guard Rail.

Rail Elements shall be lapped in the direction of traffic.

Bolts shall be cut off not to exceed 1/2" from the nut.

Locking Pin & U-Bolt shall be Cadmium Plated after fabrication.

DETAILS OF MOVABLE GUARD RAIL AT MEDIAN CROSSOVER. (CONT.)

82251 F C16

Sh. No. 45

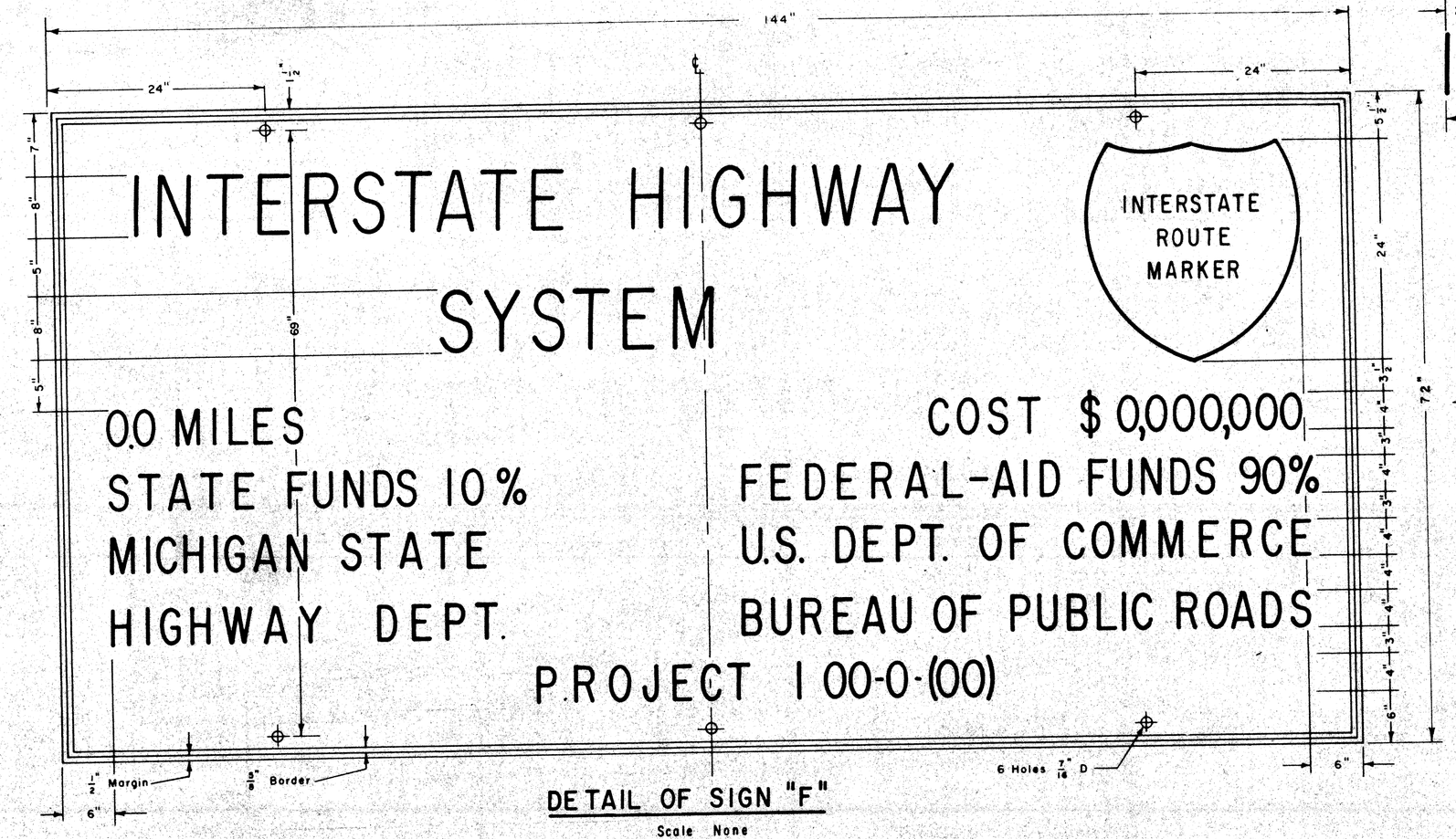

DETAIL OF SIGN "F"

Scale None

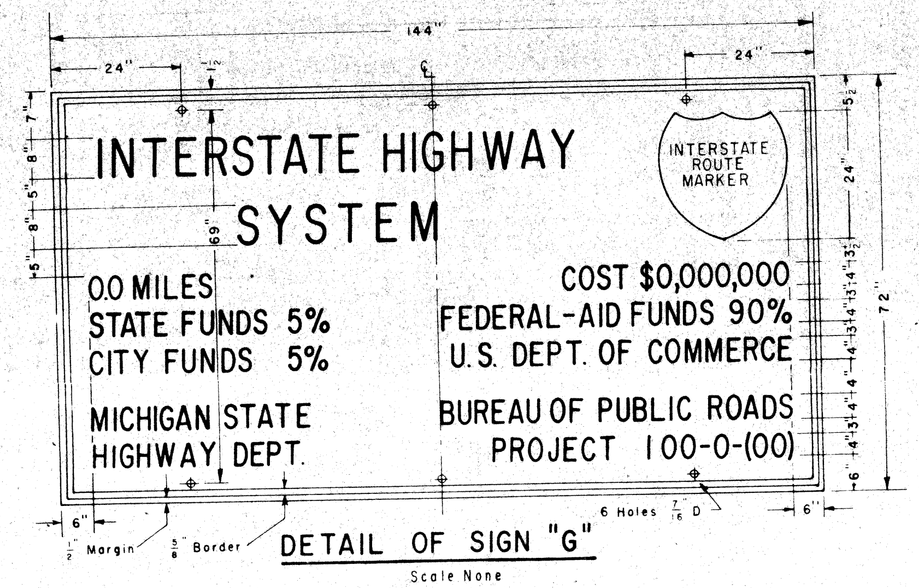

DETAIL OF SIGN "G"

Scale None

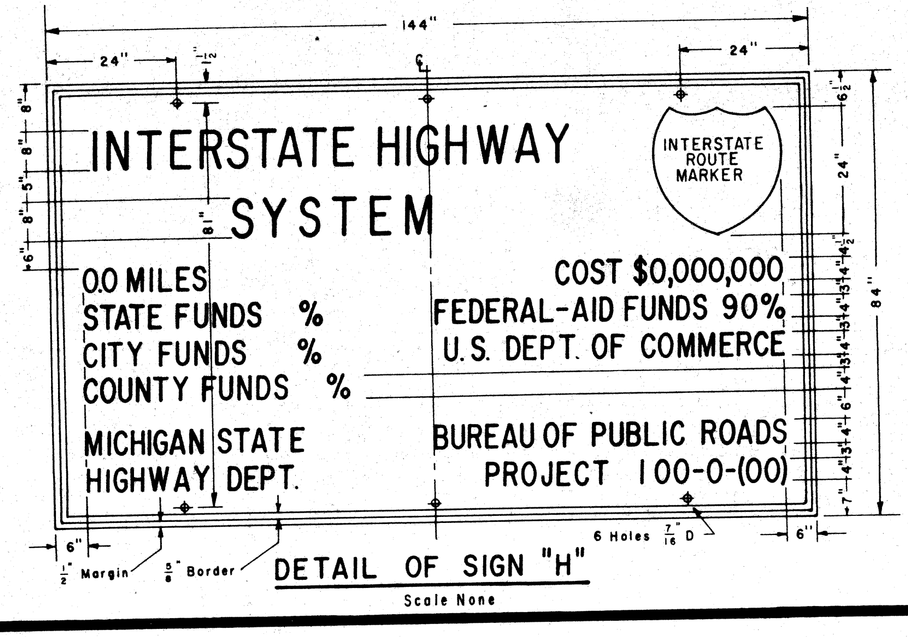

DETAIL OF SIGN "H"

Scale None

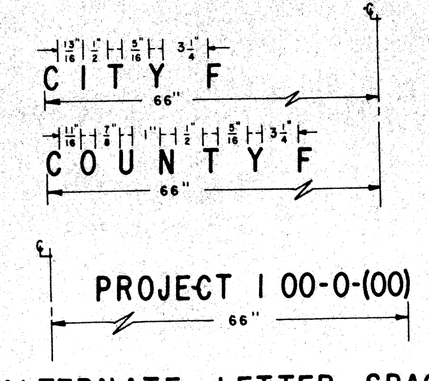

ALTERNATE LETTER SPACING FOR SIGN "G" & "H"

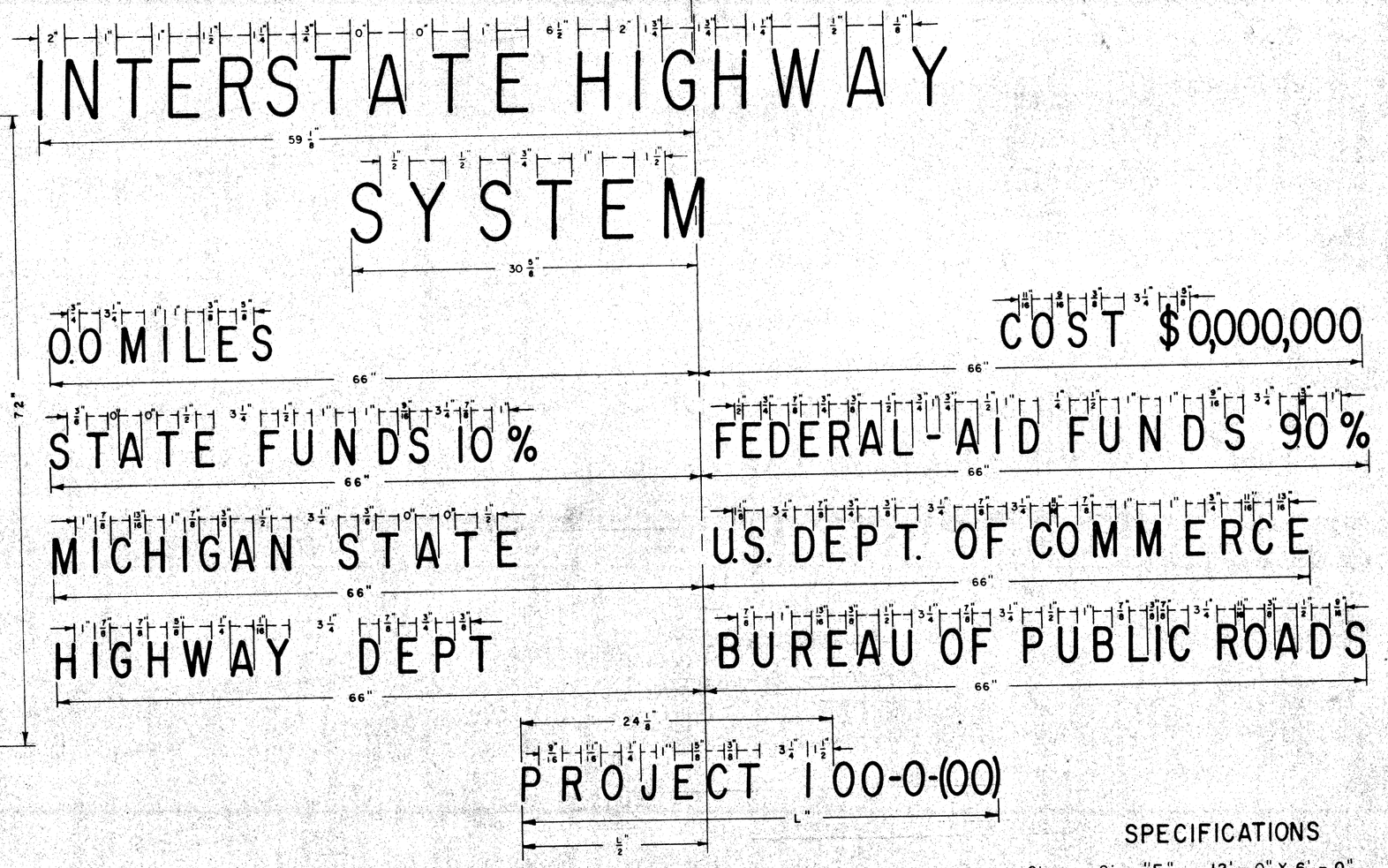

DETAIL OF LETTER SPACING

Scale None

SPECIFICATIONS

Size: Sign "F" – 12'-0" X 6'-0"
Sign "G" – 12'-0" X 6'-0"
Sign "H" – 12'-0" X 7'-0"
5/8" exterior plywood or equivalent

Legend: Series "C" letters of the height indicated – Michigan State Highway Department standard alphabet.

Color: Black legend and border on a white background.

Reflectorization: None

All material and workmanship shall comply with Michigan State Highway Department current specifications.

NOTES

1. An abbreviated form legend, such as BRIDGE, DRAINAGE, UTILITIES, SIGNING, etc., may be substituted for length of project where applicable. In these cases legend shall be same height as word "MILE" and placed similarly.

2. Where fractional percentages are required, such as 12 1/2, fractional digits shall be 2" Series "C".

3. Signs shall be located as directed by the Engineer and erected on the right side of roadway so placed that bottom of each sign is as follows:
   Sign "F" – 5' above edge of pavement
   Sign "G" – 5' above edge of pavement
   Sign "H" – 4' above edge of pavement.
   They shall be positioned so that left edge of signs are two feet beyond the outer edge of the roadway shoulder or two feet to the right of the face of an unmountable curb or as directed by the Engineer.
   Sign "F", "G" and "H" shall be supported by three 4" ϕ posts or equivalent.

4. **See Traffic Division Standard plan SB-3-5 for Interstate Route marker construction details (Route marker used on construction identification signs will not be reflectorized).**

MICHIGAN STATE HIGHWAY DEPARTMENT
STANDARD PLAN FOR
CONSTRUCTION IDENTIFICATION SIGN INTERSTATE PROJECTS

DIVISION APPROVAL

CHECKED — M. Rothstein, ENGINEER OF DESIGN — 4/28/61 DATE

RECOMMENDED FOR APPROVAL — Harold L. Bowers, TRAFFIC ENGINEER — 4-28-61 DATE

RECOMMENDED FOR APPROVAL — C. H. Culver, ENGINEER OF BRIDGE AND ROAD DESIGN — 4/28/61 DATE

OFFICES OF DESIGN AND CONSTRUCTION

APPROVED — C. B. Laird, CONSTRUCTION ENGINEER — 4-28-61 DATE

APPROVED — G. T. McCarthy, CHIEF DESIGN ENGINEER — 4-28-61 DATE

STATE HIGHWAY DEPARTMENT APPROVAL

APPROVED — JOHN C. MACKIE, STATE HIGHWAY COMMISSIONER

BY — John E. Mayer, DEPUTY CHIEF ENGINEER — 4-28-61 DATE

DRAWN BY H.E.B. & L.K. CHECKED BY — SHEET — 46 TOTAL SHEETS

82251 F C16

B.P.R. DIV. NO.	STATE	PROJ. NO.	FISCAL YEAR	SHEET NO.	TOTAL SHEETS
4	MICH.	I-75-1(45)153			
ROUTE	STATE PROJECT	COUNTY	City	SHEET NO.	TOTAL SHEETS
	82251	Wayne	Detroit		

B.P.R. DIV. NO.	STATE	PROJ. NO.	FISCAL YEAR	SHEET NO.	TOTAL SHEETS
4	MICH.				
ROUTE	STATE PROJECT	COUNTY		SHEET NO.	TOTAL SHEETS

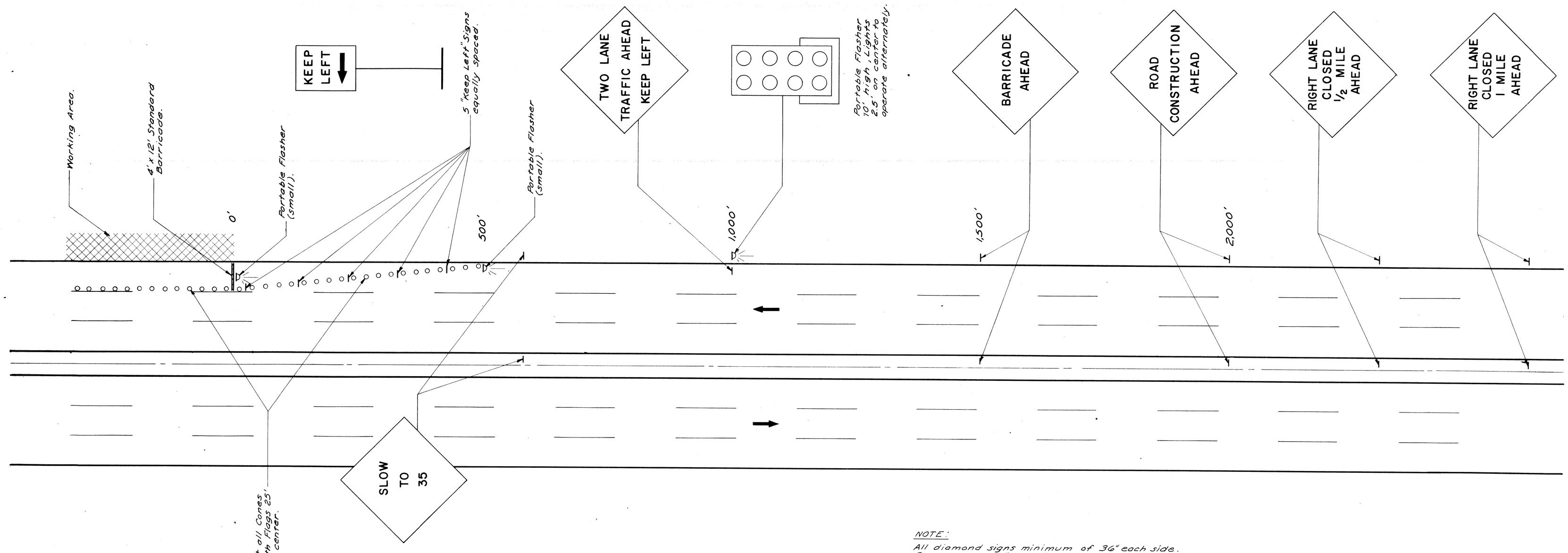

NOTE:

All diamond signs minimum of 36" each side. Rectangular 18"x 24" "Keep Left" and "Two Lane Traffic Ahead Keep Left" may be double-faced signs reading "Keep Right" and "Two Lane Traffic Ahead Keep Right" on reverse side.

TYPICAL SIGNING FOR EXISTING EXPRESSWAY UNDER CONSTRUCTION

FILE NO. USE NO. ESD STENCIL	82251 F C16	STATE PROJECT	FEDERAL PROJECT	SHEET NO.
		82251	I-75-1(45)153	47

B. K. ELLIOTT CO. 30145 600 11-64

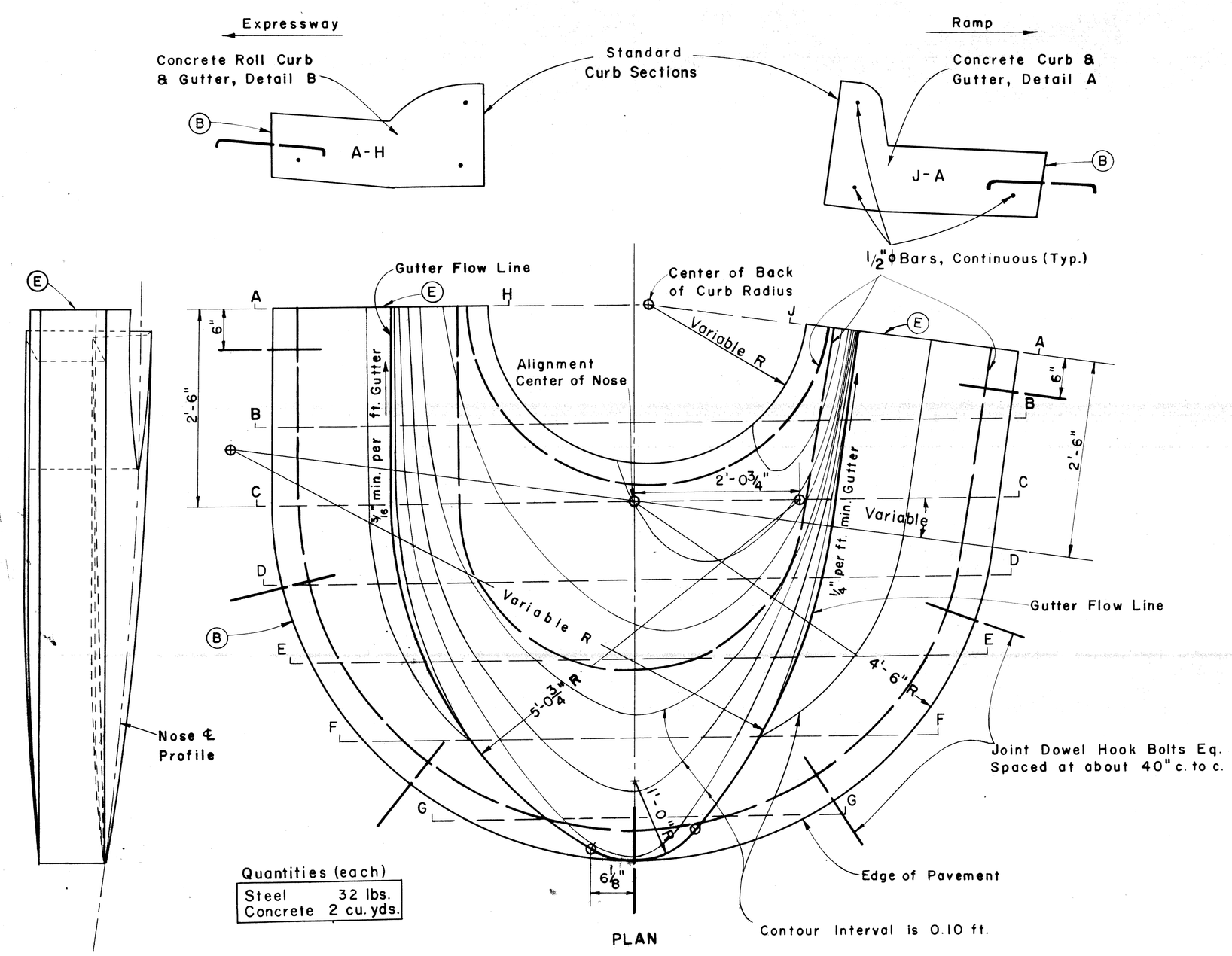

GENERAL DESIGN OF CONCRETE NOSE TO BE USED AT POINTS OF EXIT FROM THE EXPRESSWAY AS CALLED FOR ON PLANS

Scale: 1" = 1'

Notes: Noses will be warped to meet grade requirements as directed by the Engineer.

The general notes on Standard Plan E-4-A-29F shall apply.

For Joint Legend and Curb Detail See Sh. # 9 & 10

Mistake Lane Curve Data

Δ = 3° 33' 58"
D = 3° 00' 00"
R = 1909.86'
T = 59.45'
L = 118.87'
E = 0.93'

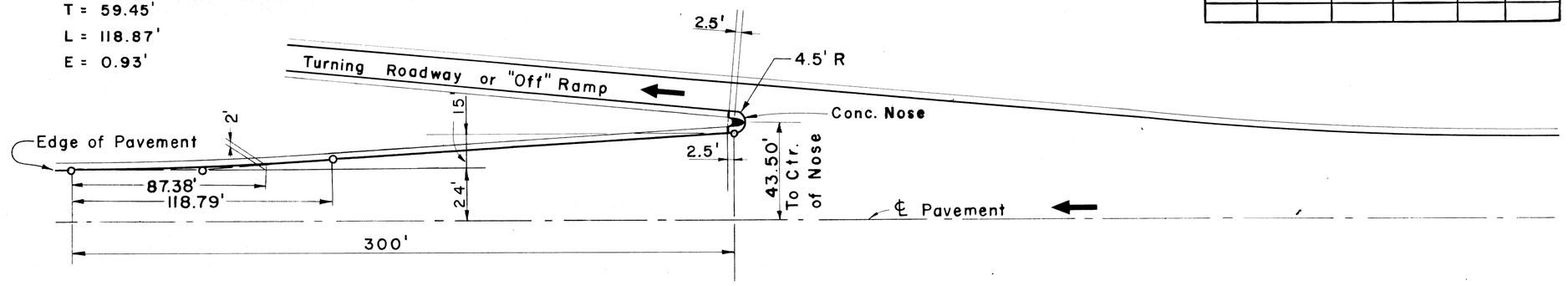

MISTAKE LANE WHERE THE EXPRESSWAY IS REDUCED BY ONE LANE AFTER THE EXIT

Scale: 1" = 40'

Mistake Lane Curve Data

Δ = 5° 14' 24"
D = 3° 00' 00"
R = 1909.86'
T = 87.39'
L = 174.67'
E = 2.00'

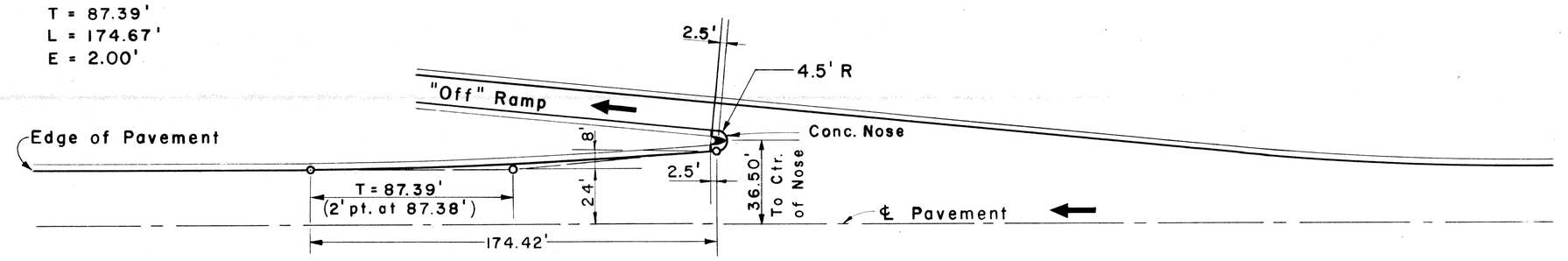

MISTAKE LANE WHERE THE SAME NUMBER OF EXPRESSWAY LANES CONTINUE AFTER THE EXIT

Scale 1" = 40'

B.P.R. DIV. NO.	STATE	PROJ. NO.	FISCAL YEAR	SHEET NO.	TOTAL SHEETS
4	MICH.	I-75-1(145)153			
ROUTE	STATE PROJECT	COUNTY	City	SHEET NO.	TOTAL SHEETS
	82251	Wayne	Detroit		

B.P.R. DIV. NO.	STATE	PROJ. NO.	FISCAL YEAR	SHEET NO.	TOTAL SHEETS
4	MICH.				
ROUTE	STATE PROJECT	COUNTY		SHEET NO.	TOTAL SHEETS

FILE NO. USE NO. 330 STENCIL	STATE PROJECT	FEDERAL PROJECT	SHEET NO.
82251 F C16	82251	I-75-1(145)153	19

U.P.R. DIV. NO.	STATE	PROJ. NO.	FISCAL YEAR	SHEET NO.	TOTAL SHEETS
4	MICH.	I-75-1(93)53			
ROUTE	STATE PROJECT	COUNTY	City	SHEET NO.	TOTAL SHEETS
	82251	Wayne	Detroit		

U.P.R. DIV. NO.	STATE	PROJ. NO.	FISCAL YEAR	SHEET NO.	TOTAL SHEETS
4	MICH.				
ROUTE	STATE PROJECT	COUNTY		SHEET NO.	TOTAL SHEETS

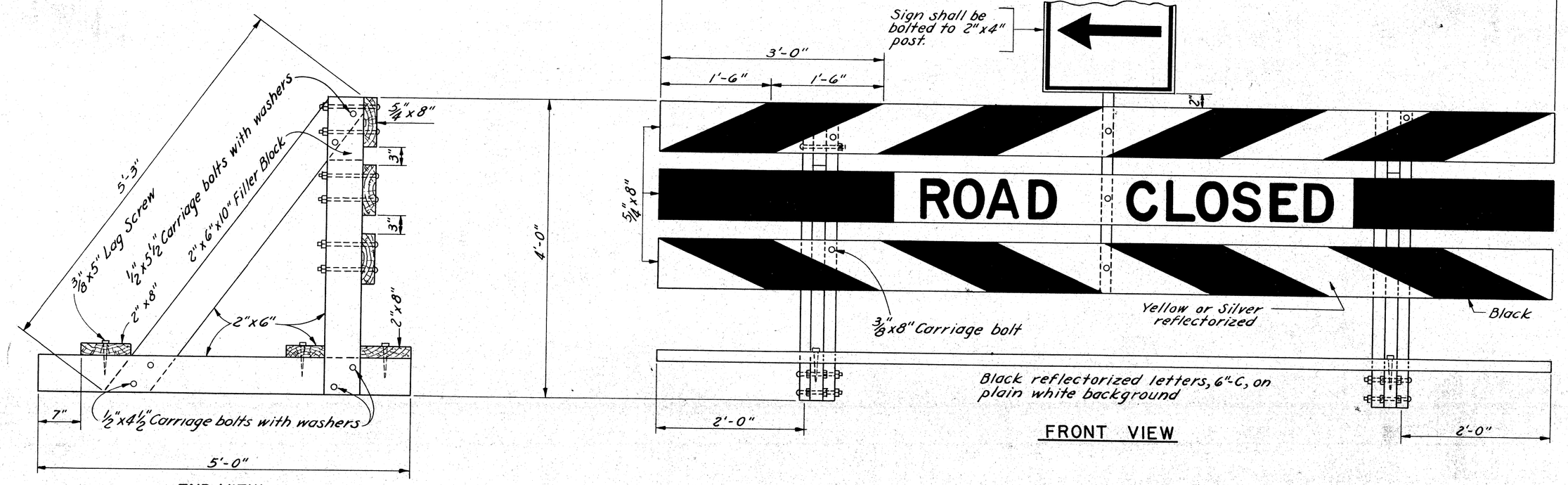

TEMPORARY BARRICADE - TYPE No. 1

Scale: 1"=1'-0"

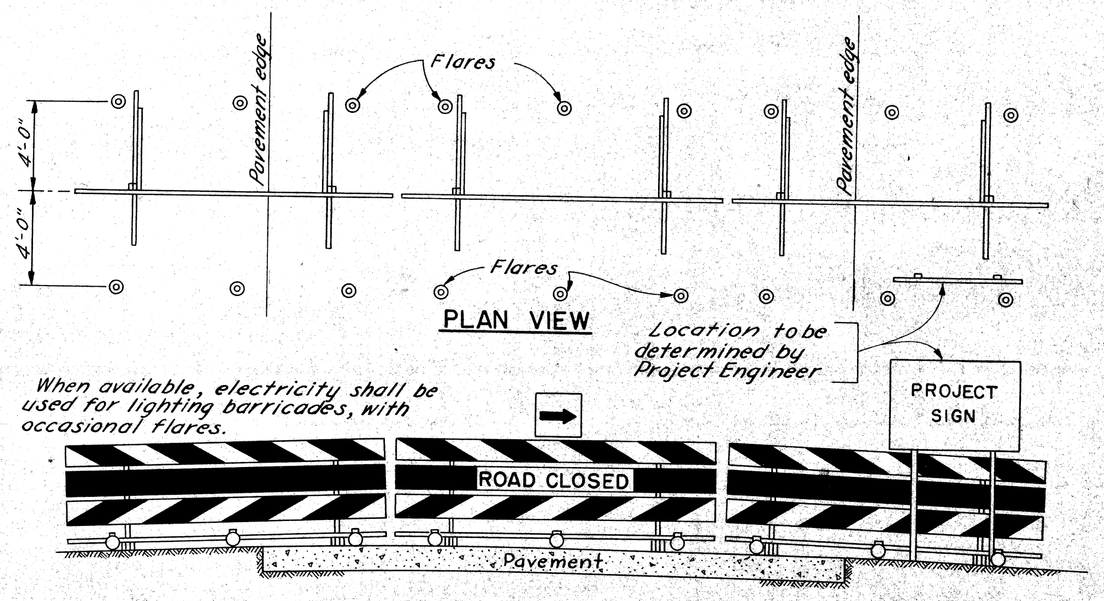

View of barricade when traffic is directed to right

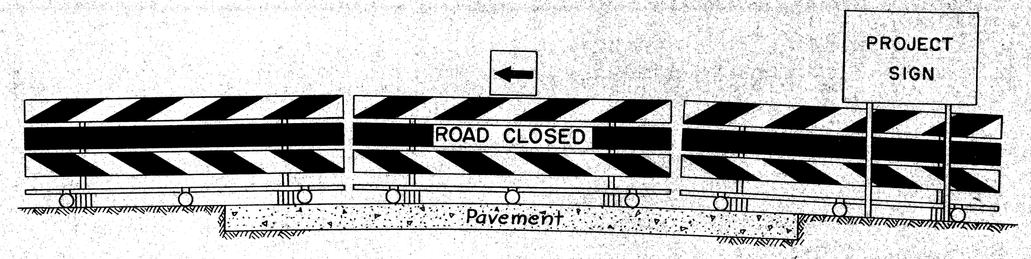

View of barricade when traffic is directed to left

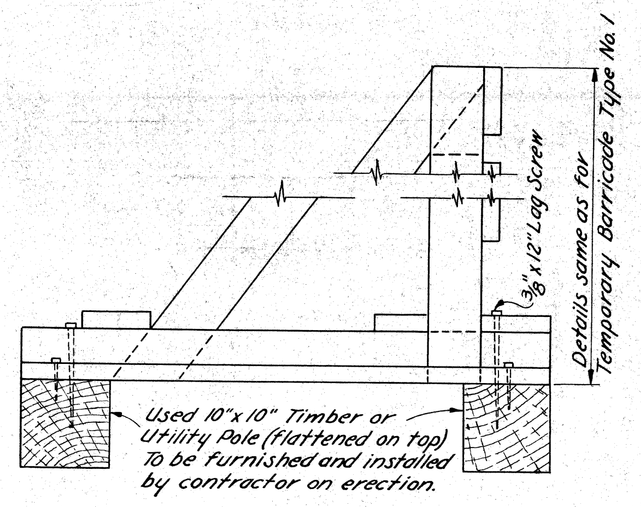

END VIEW

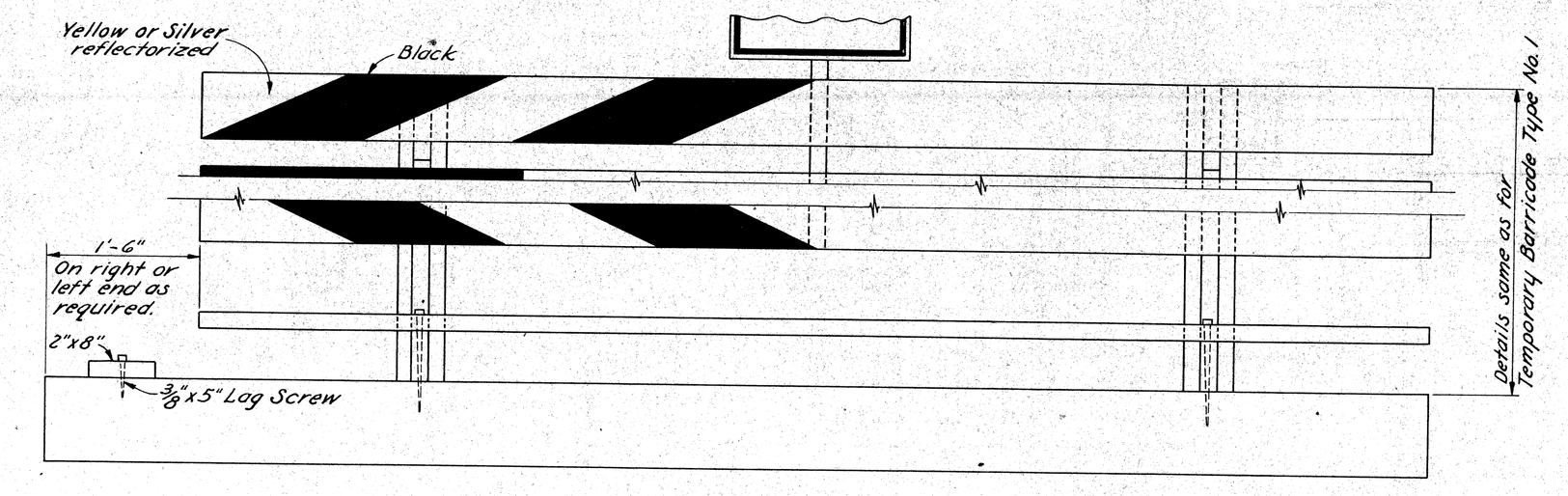

FRONT VIEW

TEMPORARY BARRICADE - TYPE No. 2

Scale: 1"=1'-0"

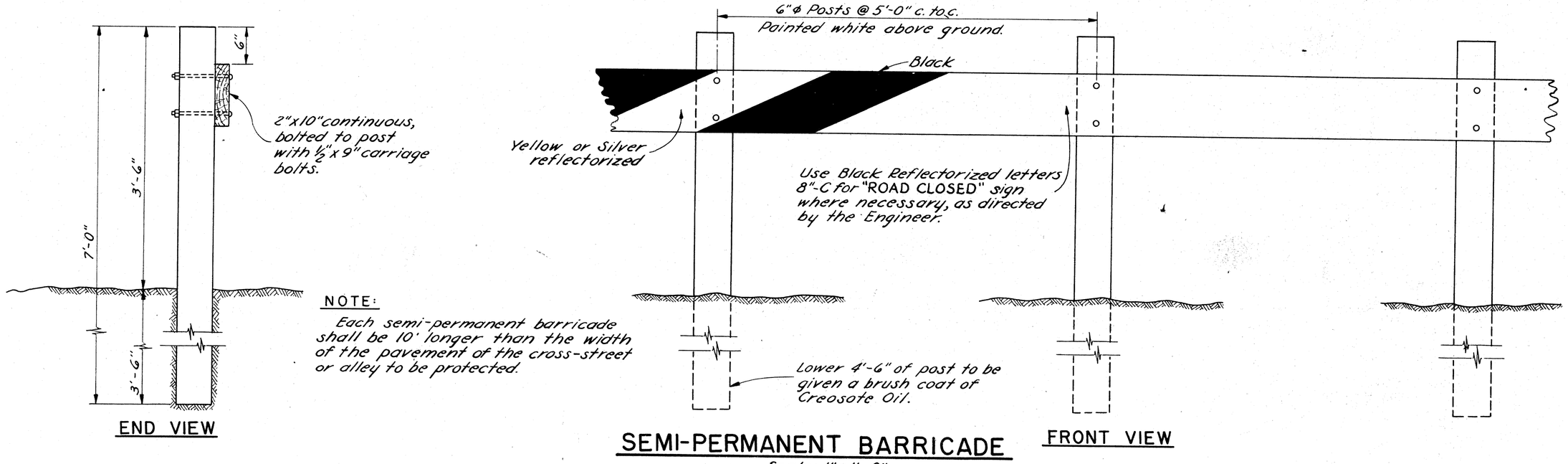

END VIEW

FRONT VIEW

SEMI-PERMANENT BARRICADE

Scale: 1"=1'-0"

NOTE:

Each semi-permanent barricade shall be 10' longer than the width of the pavement of the cross-street or alley to be protected.

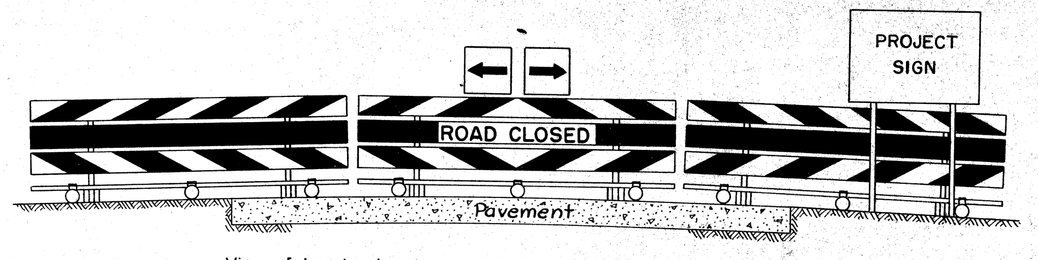

View of barricade when traffic is directed to left and right

TYPICAL BARRICADE UNITS

Scale: 1/4"=1'-0"

NOTE:

All face boards to be Douglas Fir.
All other boards and posts to be Fir.

DETAILS FOR BARRICADES

FILE NO. (P.E. NO. 350 STENCIL)	STATE PROJECT	FEDERAL PROJECT	SHEET NO.
82251 F C16	82251	I-75-1(93)53	49

FED. ROAD DIV. NO.	STATE	FEDERAL PROJ. NO.	FISCAL YEAR	SHEET NO.	TOTAL SHEETS
4	MICH.	275(45)55			
ROUTE	STATE PROJECT	COUNTY	CITY	SHEET NO.	TOTAL SHEETS
	82251	WAYNE	DETROIT		

FED. ROAD DIV. NO.	STATE	PROJ. NO.	FISCAL YEAR	SHEET NO.	TOTAL SHEETS
4	MICH.				
ROUTE	STATE PROJECT	COUNTY		SHEET NO.	TOTAL SHEETS

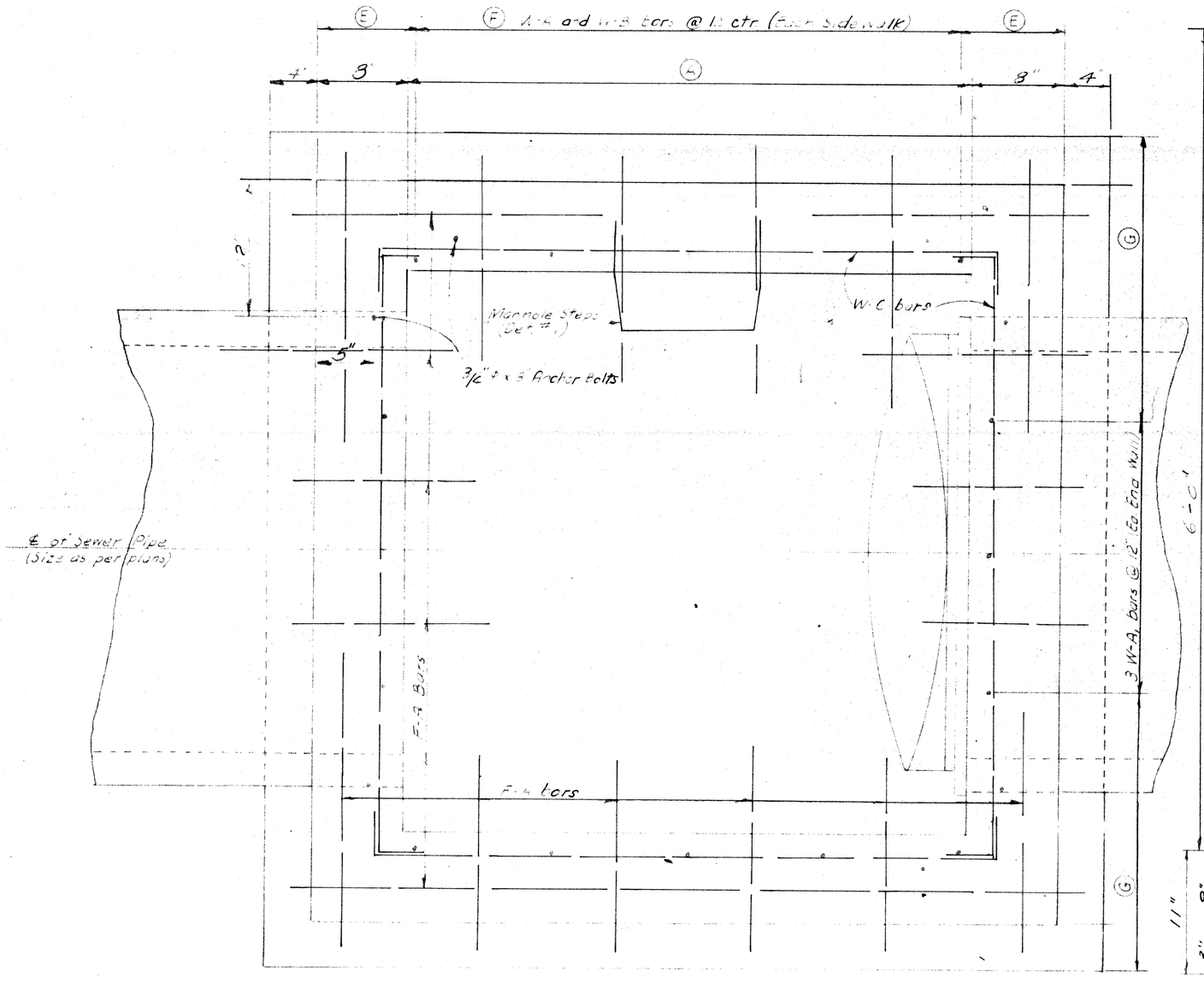

PLAN VIEW (Cover Removed

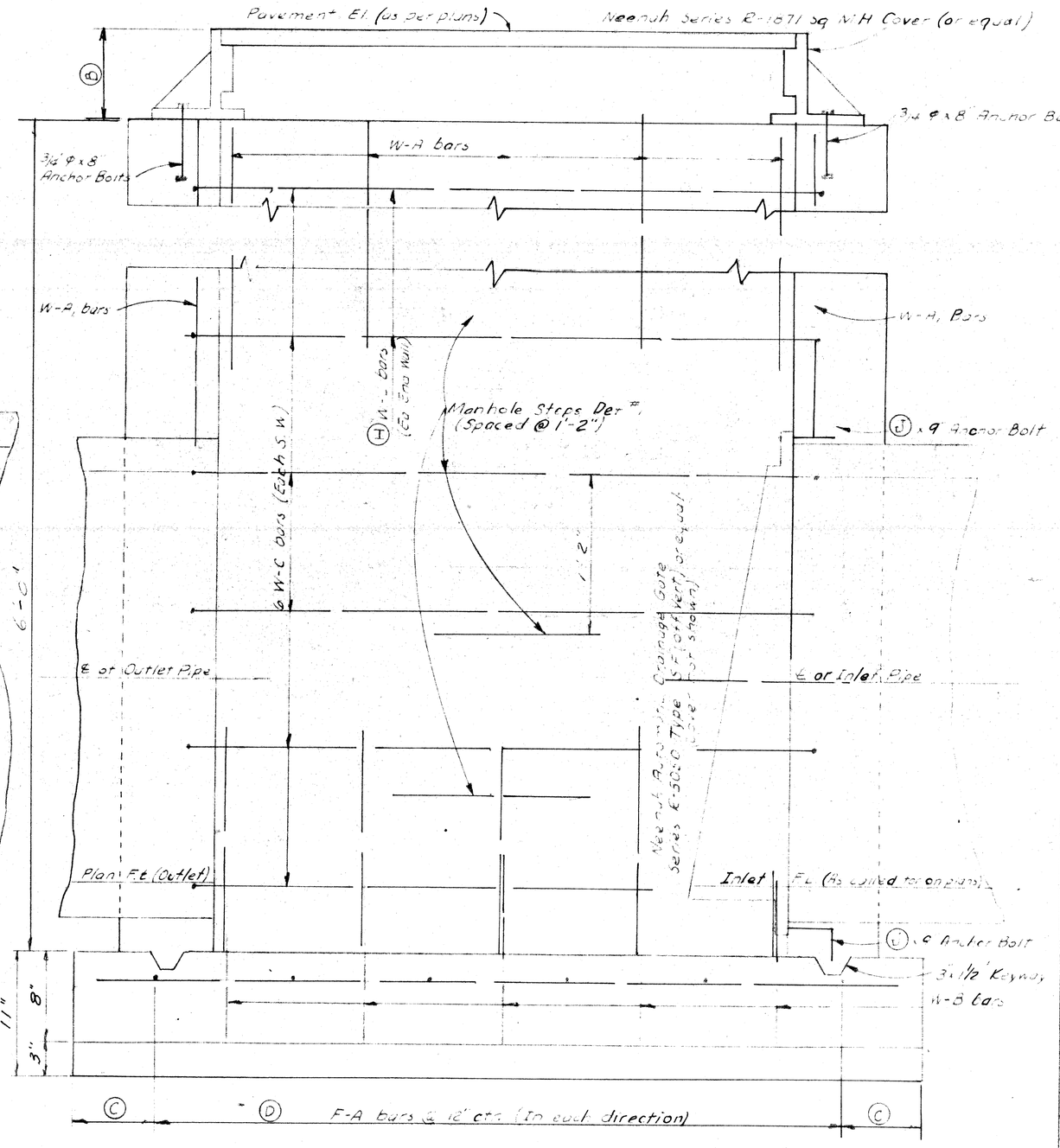

VERTICAL SECTION

All bars except W-C

W-C bar

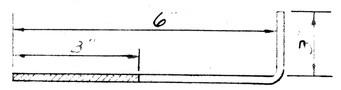

J x 9" Anchor Bolt

MARK	18" PIPE	24" PIPE	30" PIPE	36" PIPE
A	2'-8	2'-11	4'-2	4'-2"
B	7"	7"	8"	8"
C	4"	5½"	7"	7"
D	5	5	6	6
E	6"	7½	9"	9"
F	4	4	5	5
G	1'-4	1'-5½	2'-1"	2'-1"
H	4	4	2	2
J	3/4" ø	3/4" ø	7/8" ø	7/8" ø
K	3'-1	3'-4"	4'-7"	4'-7

36" TILE

Bar	Size	Spacing	No.	Length	Weight
W-A	1/2" ø	12"	10	5'-10"	34
W-A,	"	"	6	2'-0"	8
W-B	"	"	10	1'-4"	9
W-C	"	"	16	5'-3	56
F-A	1/2" ø	12"	12	5'-9"	40
Total Weight of Steel				(Lbs.)	58
Grade A Concrete				(Cu yds)	3.641
3/4" ø x 8" Anchor Bolts				(Each)	8
7/8" ø x 9" Anchor Bolts				(Each)	6
36" Automatic Drainage Gate (Ea)					1
50" x 50" Sq Manhole Cover				(Each)	1
Manhole Steps Det #,				(Each)	4
Steel each additional ft				(Lbs)	25
Conc. each additional ft				(Cu yds)	0.477

30" TILE

Bar	Size	Spacing	No.	Length	Weight
W-A	1/2" ø	12"	10	5'-10"	39
W-A,	"	"	6	3'-6"	10
W-B	"	"	10	1'-4"	9
W-C	"	"	16	5'-3"	56
F-A	1/2" ø	12"	12	5'-9"	46
Total Weight of Steel				(Lbs.)	160
Grade A Concrete				(Cu yds.)	3.825
3/4" ø x 8" Anchor Bolts				(Each)	8
7/8" ø x 9" Anchor Bolts				(Each)	6
30" Automatic Drainage Gate (Ea)					1
50" x 50" Sq Manhole Cover				(Each)	1
Manhole Steps Det #,				(Each)	4
Steel each additional ft				(Lbs)	25
Conc. each additional ft				(Cu yds)	0.477

24" TILE

Bar	Size	Spacing	No.	Length	Weight
W-A	1/2" ø	12"	8	5'-10"	31
W-A,	"	"	6	3'-2"	13
W-B	"	"	8	1'-4	7
W-C	"	"	20	4'-0"	53
F-A	1/2" ø	12"	10	4'-6"	30
Total Weight of Steel				(Lbs.)	134
Grade A Concrete				(Cu yds.)	2.733
3/4" ø x 8" Anchor Bolts				(Each)	8
7/8" ø x 9" Anchor Bolts				(Each)	6
24" Automatic Drainage Gate (Each)					1
30" x 30" Sq Manhole Cover (Each)					1
Manhole Steps Det #, (Each)					4
Steel each additional ft				(Lbs.)	20
Conc. each additional ft				(Cu yds)	0.354

18" TILE

Bar	Size	Spacing	No.	Length	Weight
W-A	1/2" ø	12"	8	5'-10"	31
W-A,	"	"	6	3'-6"	14
W-B	"	"	8	1'-4"	7
W-C	"	"	20	3'-9"	50
F-A	1/2" ø	12"	10	4'-3"	28
Total Weight of Steel				(Lbs.)	130
Grade A Concrete				(Cu yds.)	2.546
3/4" ø x 8" Anchor Bolts				(Each)	8
7/8" ø x 9" Anchor Bolts				(Each)	4
18" Automatic Drainage Gate (Each)					1
30" x 30" Sq Manhole Cover (Each)					1
Manhole Steps Det #1 (Each)					4
Steel each additional ft				(Lbs.)	20
Conc. each additional ft				(Cu yds)	0.329

QUANTITIES FOR 6' HEIGHT MANHOLE

Rein. Steel and Conc. for each Additional Foot of Height

SQUARE MANHOLE WITH PRESSURE COVER STA. 595+99.20

FILE AND SHEET NO.	PROJECT	ROADWAY PROJECT	SHEET NO.
82251 F C16	82251	275(45)55	50

B.P.R. DIV. NO.	STATE	PROJ. NO.	FISCAL YEAR	SHEET NO.	TOTAL SHEETS
4	MICH.	I-75-1(83)53			
ROUTE	STATE PROJECT	COUNTY	City	SHEET NO.	TOTAL SHEETS
	82251	Wayne	Detroit		

B.P.R. DIV. NO.	STATE	PROJ. NO	FISCAL YEAR	SHEET NO.	TOTAL SHEETS
4	MICH.				
ROUTE	STATE PROJECT	COUNTY		SHEET NO.	TOTAL SHEETS

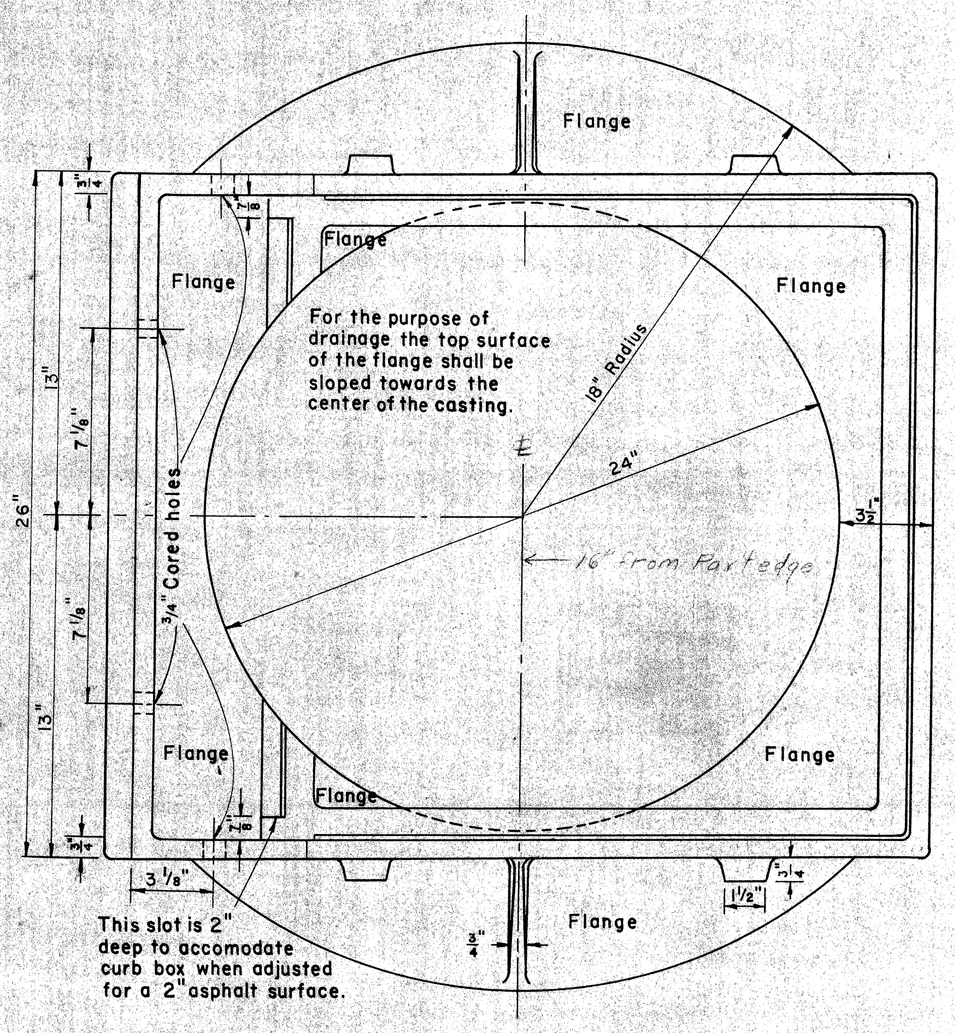

PLAN VIEW

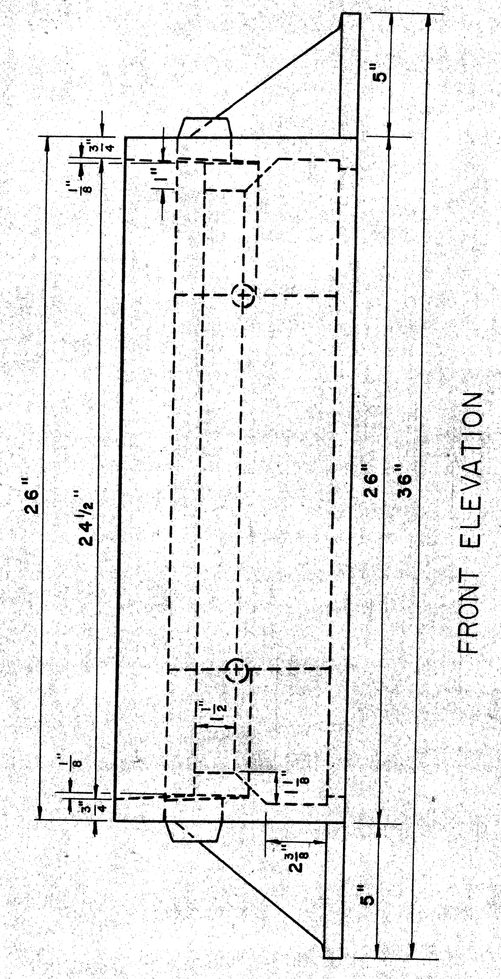

FRONT ELEVATION

All corners to have 1/4" radii or 1/4" radius fillets.

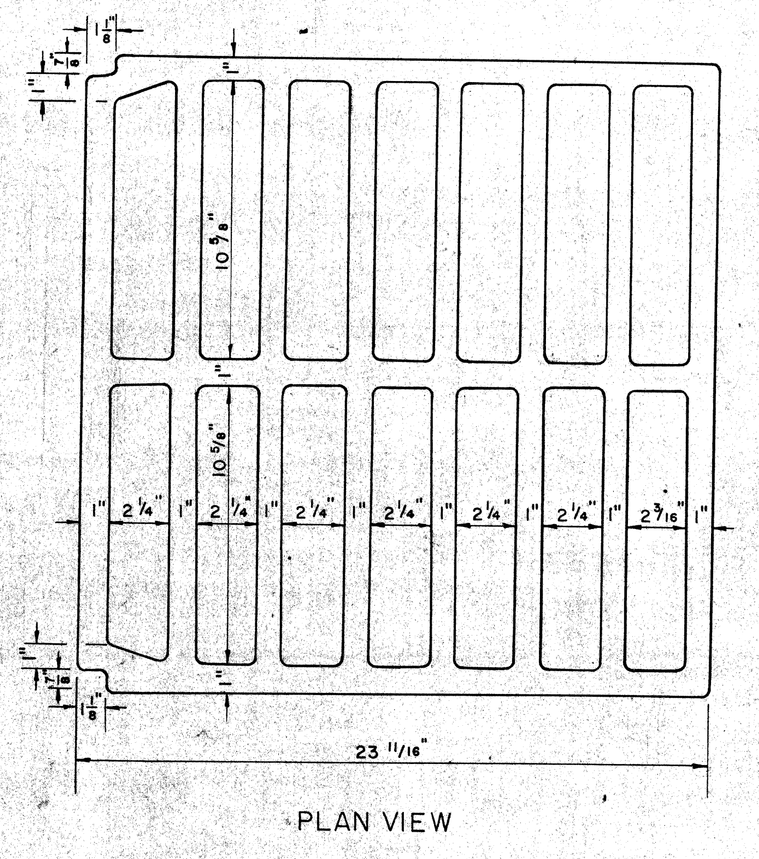

PLAN VIEW

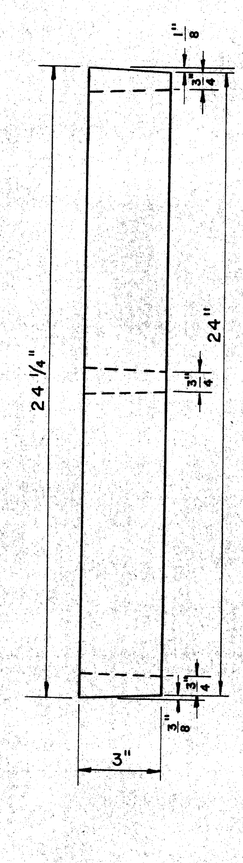

FRONT ELEVATION

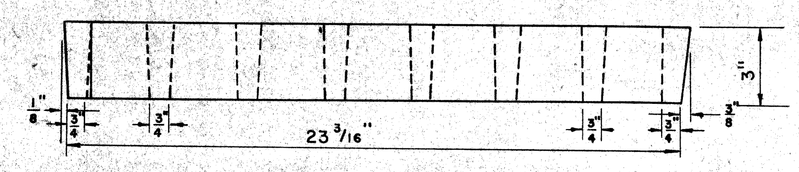

SIDE ELEVATION

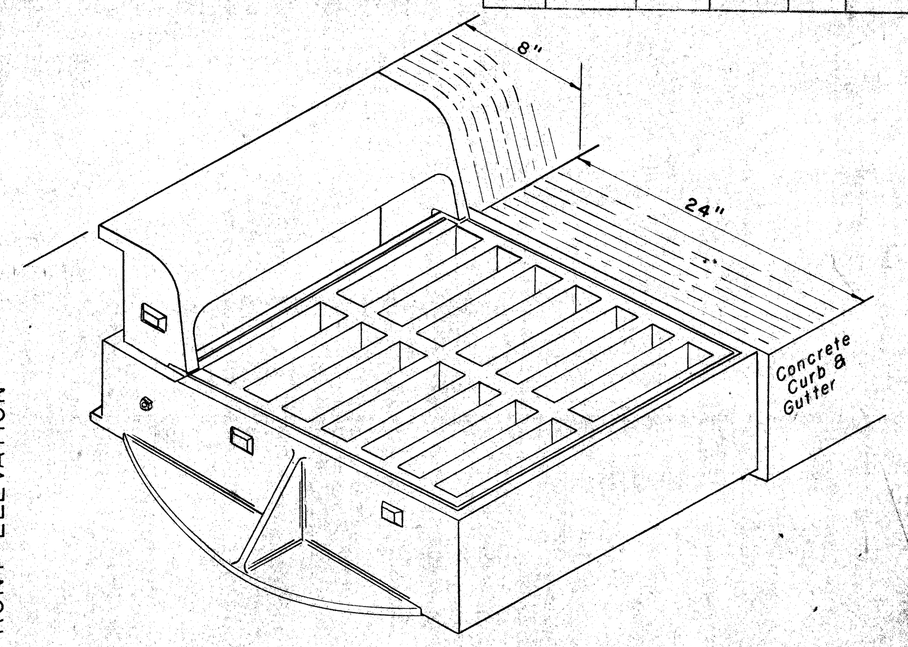

ISOMETRIC VIEW

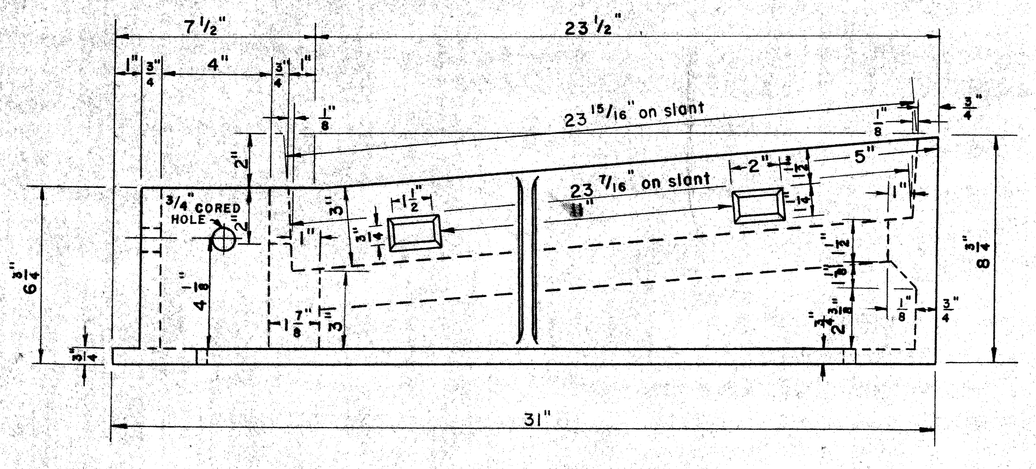

SIDE ELEVATION

DETAILS OF FRAME
Scale 1/4" = 1'

Bolt curb box firmly to frame at foundry with four 5/8" x 2 1/2" Galvanized Machine bolts with washers on nut ends.
(See general note)

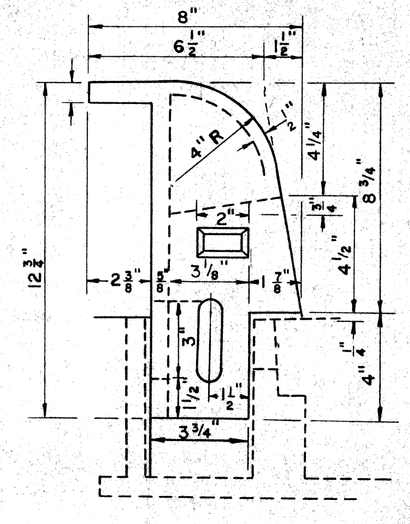

SIDE ELEVATION

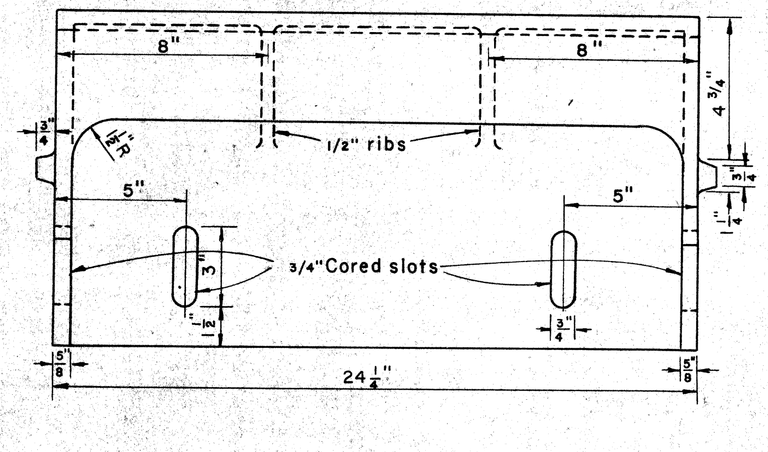

FRONT ELEVATION

DETAILS OF CURB BOX
Scale 1/4" = 1'

DETAILS OF GRATE
Scale 1/4" = 1'

NOTES:

All materials and workmanship shall be in accordance with the current Michigan State Highway Department Standard Specifications.

The castings shall meet the requirement of the Current Specifications for Gray-Iron Castings A.S.T.M. Designation A-48 and shall have a minimum strength as provided for class No. 30 Gray-Iron castings.

All Castings shall be cleaned by sand blastings.

The bearing surfaces between Curb Box and Frame shall be Ground and seated so as to produce an even bearing thru out. The Curb Box shall be firmly bolted in place on the frame before finishing of the Grate Seats is done. Galvanized iron washers and shims shall be placed between frame and ends of Curb Box so as to prevent breaking of Curb Box when these bolts are tightened.

The producing foundry shall deliver the Curb Box and Frame completely assembled to the contractor.

The seating face of the grate and the seat for same on the frame and the curb box shall be ground so that the grate shall have an even bearing on its seat to prevent rocking or tilting.

The castings shall be free of pouring faults, blow holes, cracks and other imperfections. They shall be sound, true to form and thickness, clean, and neatly finished, and shall be coated with coal tar pitch varnish.

SPECIAL DETAILS FOR COVER H

FILE No. USE No. 350 BT&NSU	82251 F C16	ROUTE	F.A.P. PROJECT NO.	SHEET NO.
		82251		51

U.P.R. D.V. NO.	STATE	PROJ. NO.	FISCAL YEAR	SHEET NO.	TOTAL SHEETS
4	MICH.	I-75-1(43)53			
ROUTE	STATE PROJECT	COUNTY		SHEET NO.	TOTAL SHEETS
	82251	Wayne Detroit			
U.P.R. D.V. NO.	STATE	PROJ. NO.	FISCAL YEAR	SHEET NO.	TOTAL SHEETS
4	MICH.				
ROUTE	STATE PROJECT	COUNTY		SHEET NO.	TOTAL SHEETS

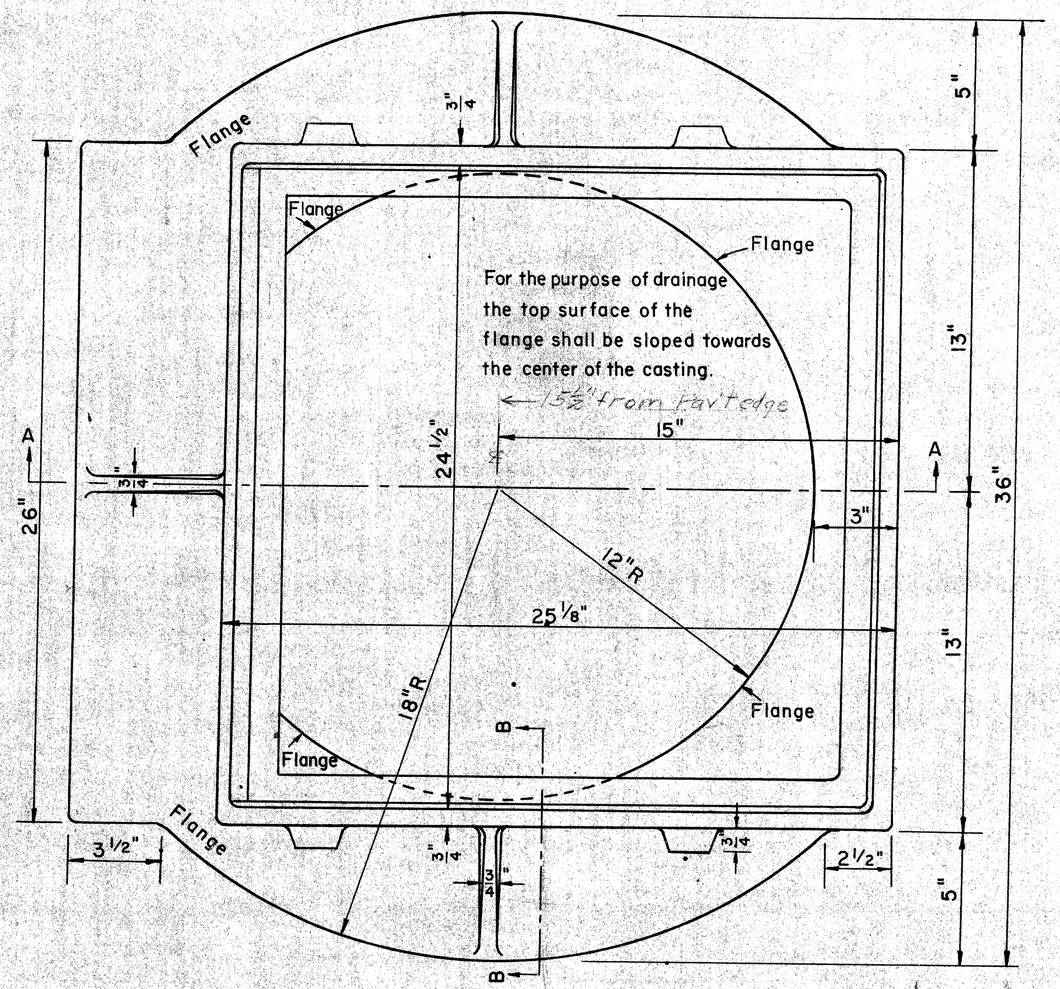

PLAN VIEW

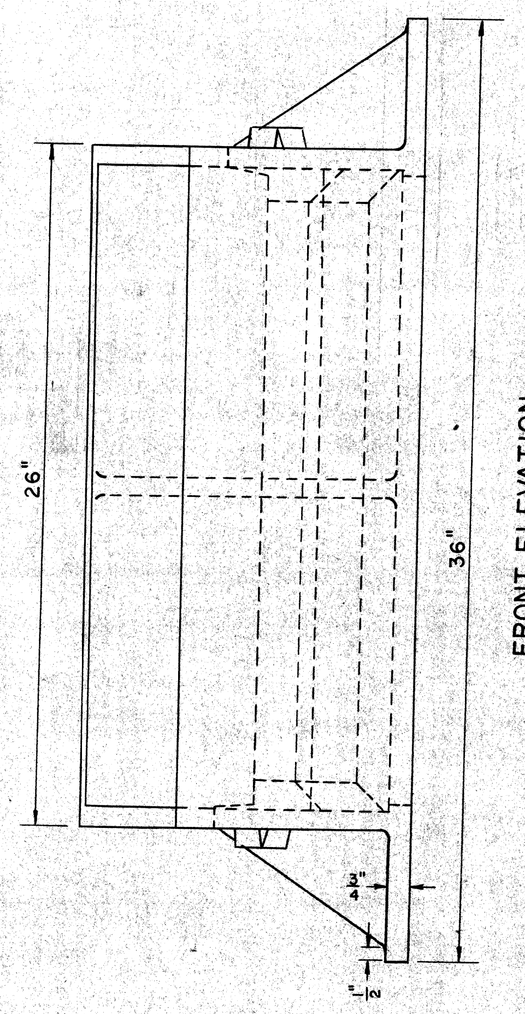

FRONT ELEVATION

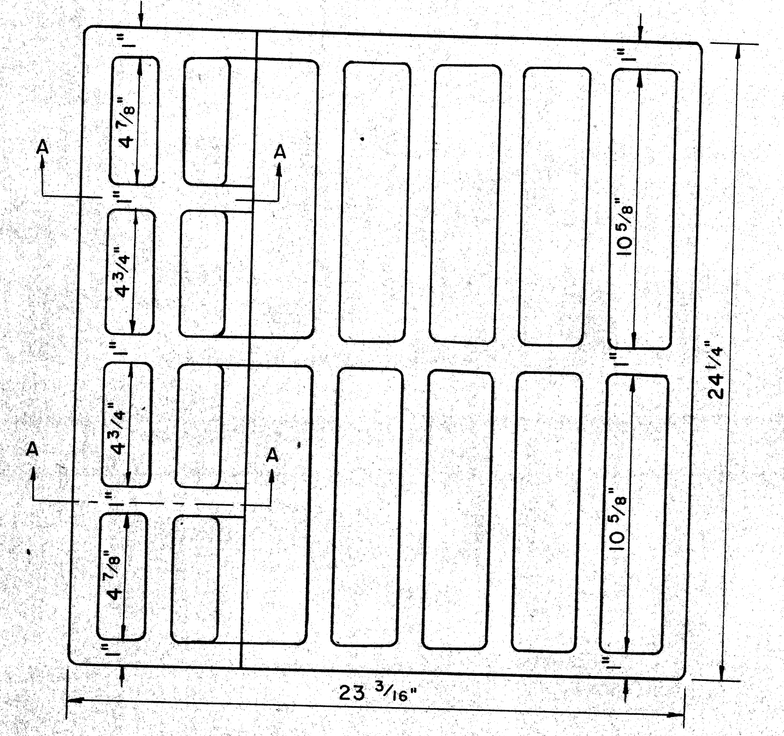

PLAN VIEW

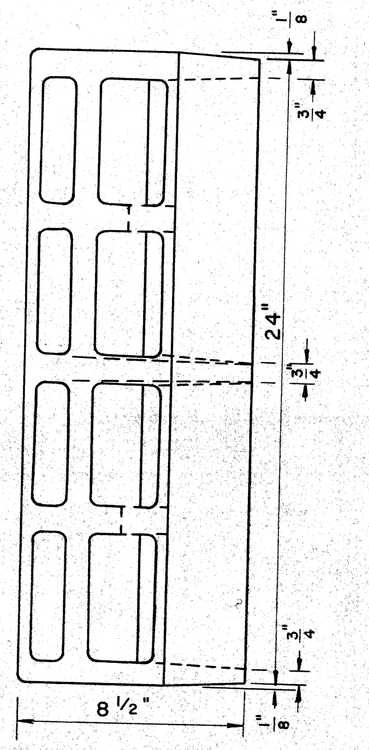

FRONT ELEVATION

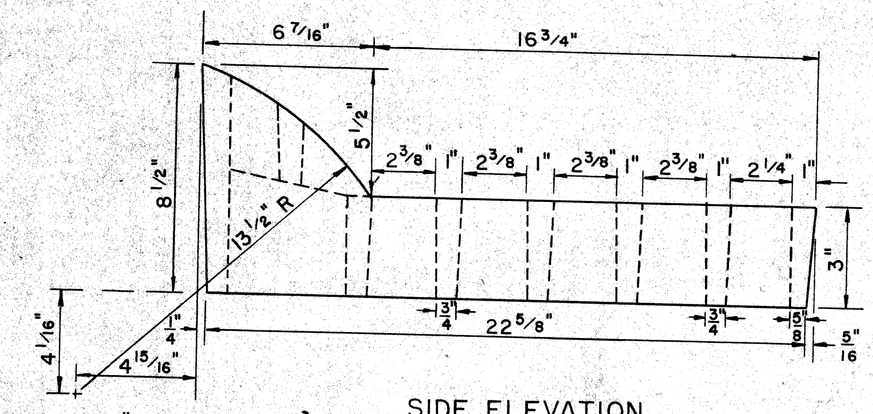

SIDE ELEVATION

All corners to have 1/4" radii or 1/4" radius fillets.

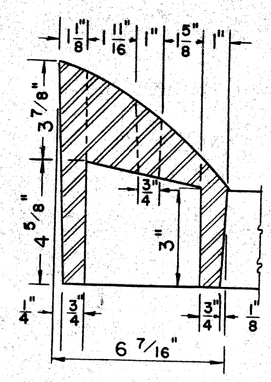

SECTION A-A

DETAILS OF CATCH BASIN GRATE

Scale 1/4"=1"

Notes:

All materials and workmanship shall be in accordance with the current Michigan State Highway Department Standard Specifications.

The Castings shall meet the requirements of the current Specifications for Gray Iron Castings, A.S.T.M. Designation A48 and shall have a minimum strength as provided for class No. 30 Gray Iron Castings.

All Castings shall be cleaned by sand blasting.

The seating face of the Grate and the seat for same on the Frame shall be ground so that the grate shall have an even bearing on its seat to prevent rocking or tilting.

The castings shall be free of pouring faults, blow holes, cracks, and other imperfections. They shall be sound, true to form and thickness, clean and neatly finished, and shall be coated with coal tar pitch varnish.

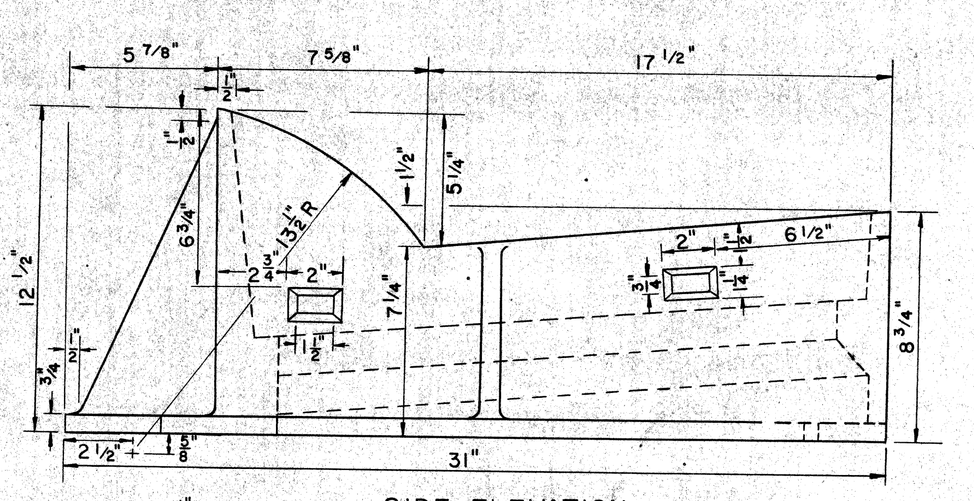

SIDE ELEVATION

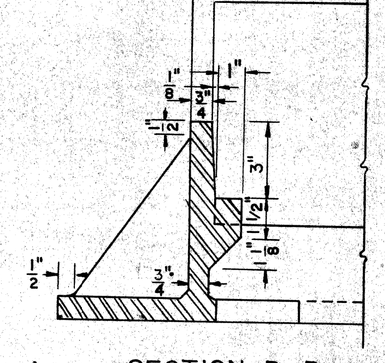

SECTION B-B

DETAILS OF CATCH BASIN FRAME

Scale 1/4"=1"

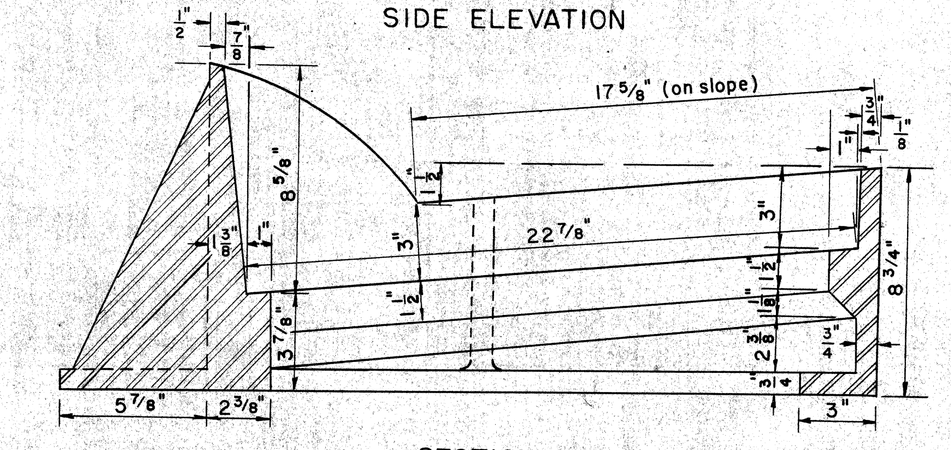

SECTION A-A

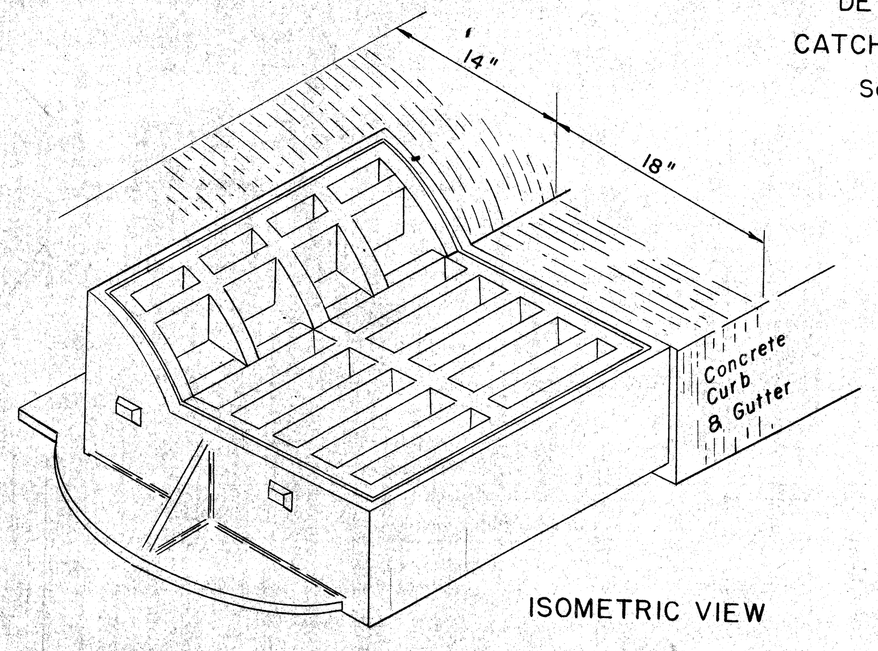

ISOMETRIC VIEW

SPECIAL DETAILS FOR COVER J

FILE NO. USE NO. SEQ. STENCILS	82251 F C16	STATE PROJECT	FED. SEQ.	SHEET NO.
		82251		32

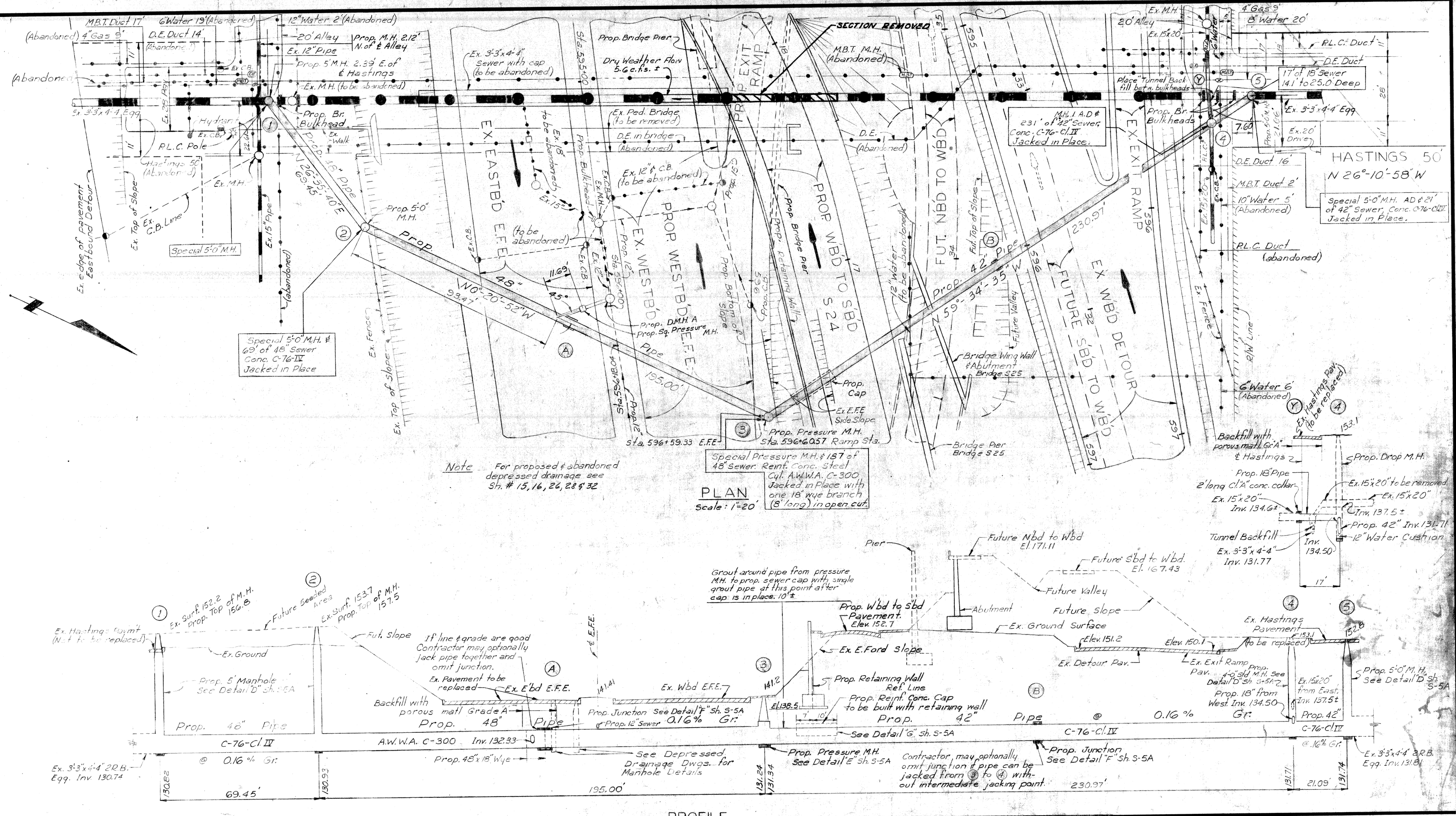

Note For proposed & abandoned depressed drainage see Sh. # 15, 16, 24, 28 & 32

PLAN
Scale: 1"=20'

PROFILE
Scale: Hor. 1"=20'
Vert. 1"=10'

NOTE
1. This sheet details sewer alterations only. For details of C.B.s & other utility alterations see other sheets included in this set.
2. The 5 bulkheads to be built as shown on the plan are incidental to the contract cost.

SEC. B-5 | SH. S-5

CITY OF DETROIT
DEPARTMENT OF PUBLIC WORKS
CITY ENGINEERS OFFICE DATE 5-8-61

DESIGNED BY: A. Sarafa
DRAWN BY: T. Wozniak
CHECKED BY: C.C. J.D.M.

APPROVED: Grant E. Hedge
SANITARY ENGINEER
ASST. CITY ENGINEER
Orlyn L. Palmer
CITY ENGINEER

MICHIGAN STATE HIGHWAY DEPARTMENT
WALTER P. CHRYSLER EXPRESSWAY
HASTINGS SEWER RELOCATION
FROM ALLEY N. OF HENDRIE
TO ALLEY S. OF HARPER

REVISIONS

NO.	DESCRIPTION	DATE	BY

SQUAD BOSS			
DRAWN BY			
TRACED BY			
CHECKED BY			

SHEET 53 OF

82251 F C16

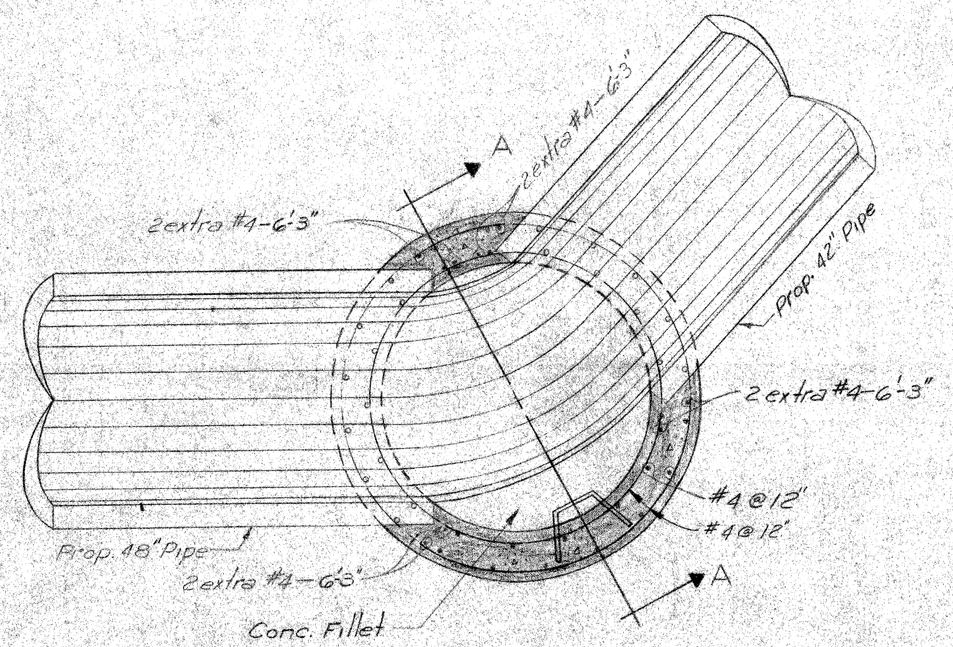

SECTION B-B
Scale: 1"=2'

Reinf. Steel Note:
All laps to be 30 bar diam.

Quantities for Cap
Reinf. Steel 879 lbs.
Conc. Grade 'A' 10 cu. yds.

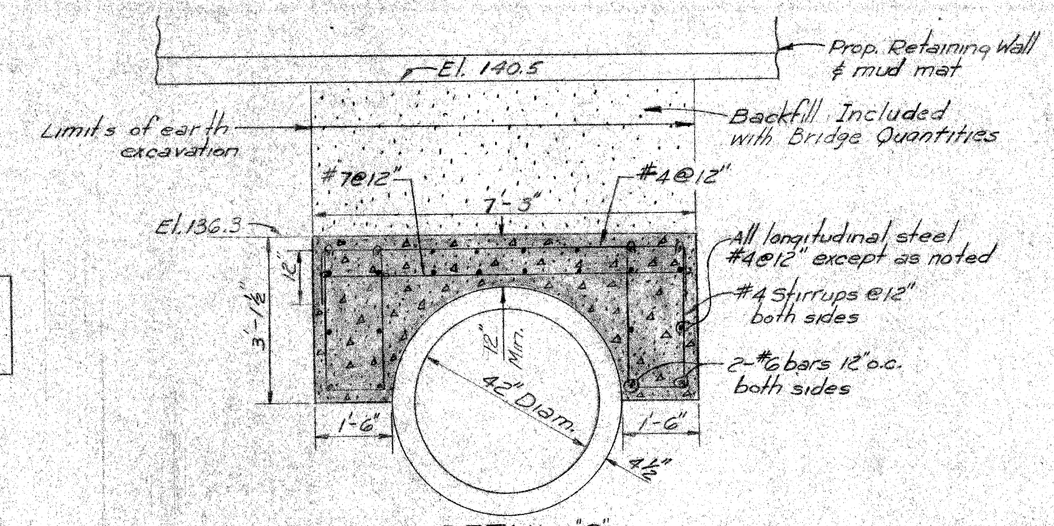

DETAIL "G"
REINFORCED CONC. CAP
Scale: 1"=2'

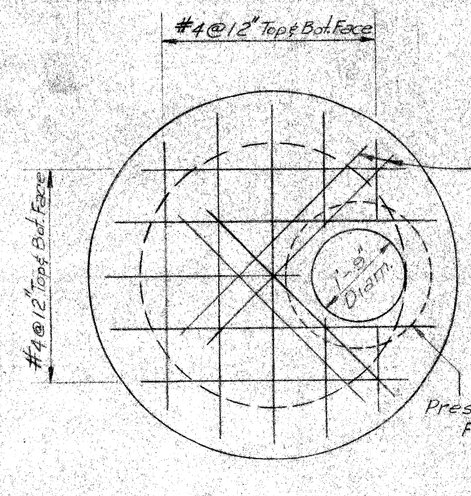

TOP SLAB
Scale: 1"=2'

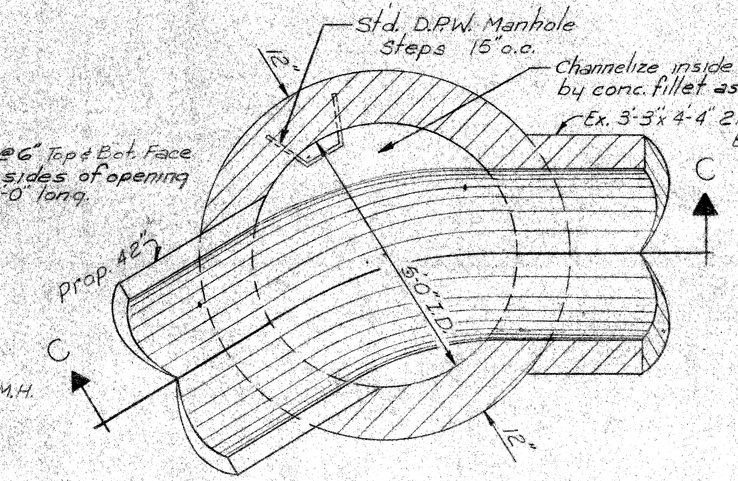

DETAIL "D"
PROP. 5'-0" M.H. (5)
M.H.S (1) (2) (4) SIMILAR
Scale: 1"=2'

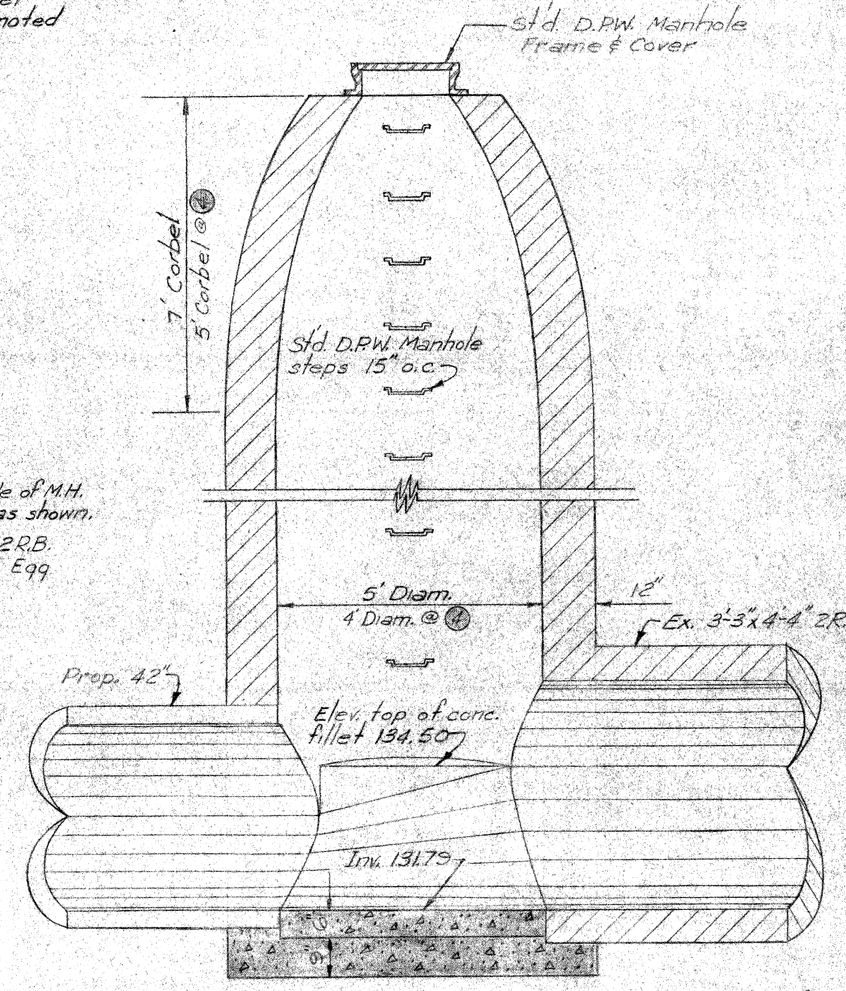

SECTION C-C
Scale: 1"=2

Elev. top of conc. Fillet @:
M.H. (1) — 133.45
M.H. (2) — 132.93
M.H. (4) — 133.46

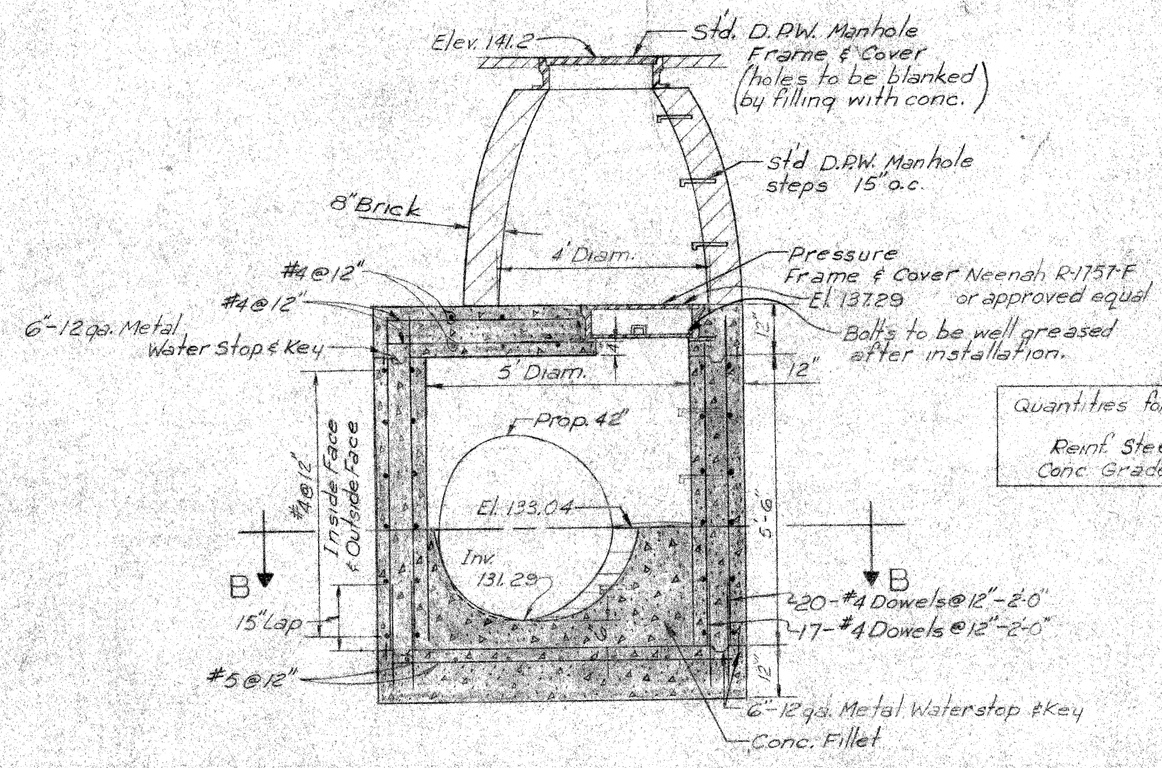

SECTION A-A
scale: 1"=2'

Quantities for Press. M.H.
Reinf. Steel 330 lbs.
Conc. Grade "A" 6 cu. yds.

DETAIL "E"
PROP. PRESSURE M.H. (3)

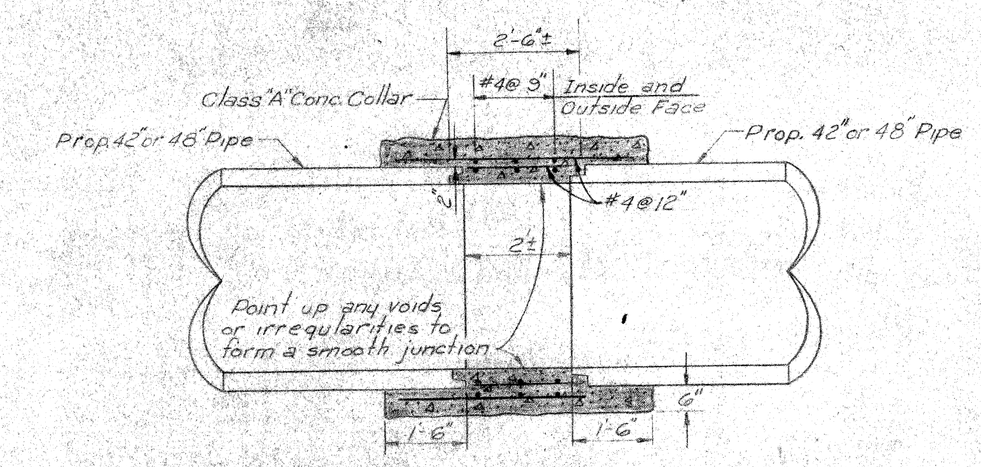

PROP. JUNCTION (A) & (B)
DETAIL "F"
Scale: 1"=2'

CITY OF DETROIT
DEPARTMENT OF PUBLIC WORKS
CITY ENGINEERS OFFICE DATE 5-8-61

DESIGNED BY:	APPROVED:
G. Dieroff	Grant E. Hunter, SANITARY ENGINEER
DRAWN BY: T. Wozniak	
CHECKED BY:	Asst. CITY ENGINEER
	Clayton L. Palmer, CITY ENGINEER

MICHIGAN STATE HIGHWAY DEPARTMENT
WALTER P. CHRYSLER EXPRESSWAY
HASTINGS SEWER RELOCATION
DETAILS

REVISIONS			
NO.	DESCRIPTION	DATE	BY

SQUAD BOSS		
DRAWN BY		
TRACED BY		
CHECKED BY		

SHEET 54 OF

82251 F C16

SEC. B-5 | SH. S-5A

B.P.R. DIV. NO.	STATE	PROJ. NO.	FISCAL YEAR	SHEET NO.	TOTAL SHEETS
4	MICH.	I-75-1(183)183			
ROUTE	STATE PROJECT	COUNTY	City	SHEET NO.	TOTAL SHEETS
	B2251	Wayne	Detroit		

B.P.R. DIV. NO.	STATE	PROJ. NO.	FISCAL YEAR	SHEET NO.	TOTAL SHEETS
4	MICH.				
ROUTE	STATE PROJECT	COUNTY		SHEET NO.	TOTAL SHEETS

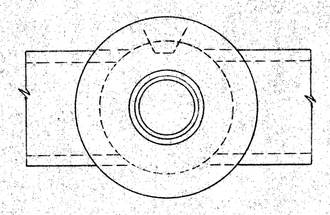

PLAN

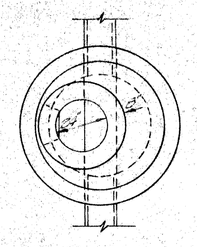

PLAN

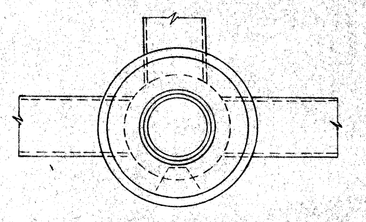

PLAN

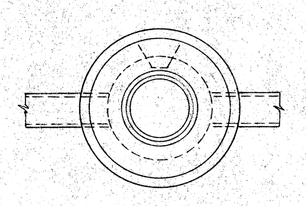

PLAN

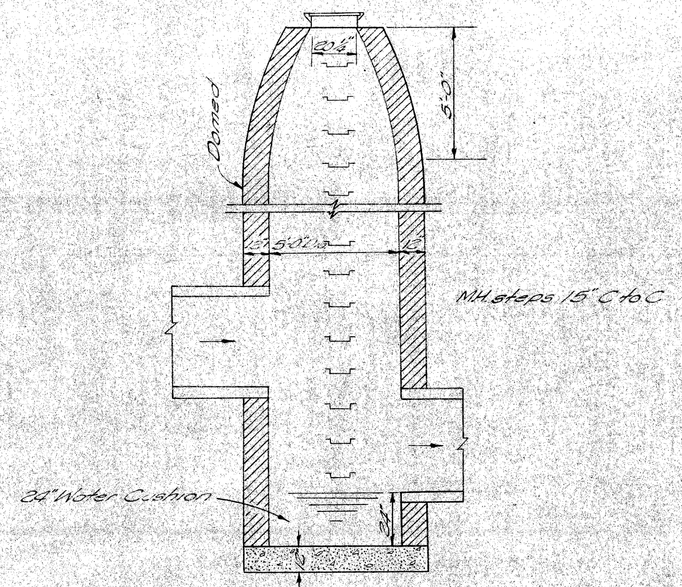

SPECIAL 5FT. MANHOLE
Scale: ½"=1'-0"

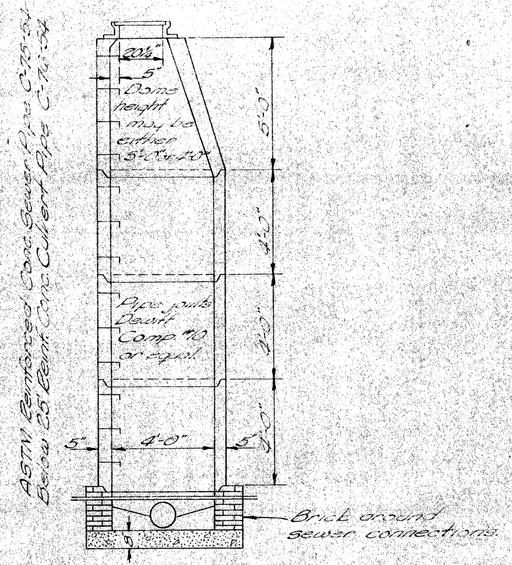

PRECAST MANHOLE
Scale: ½"=1'-0"

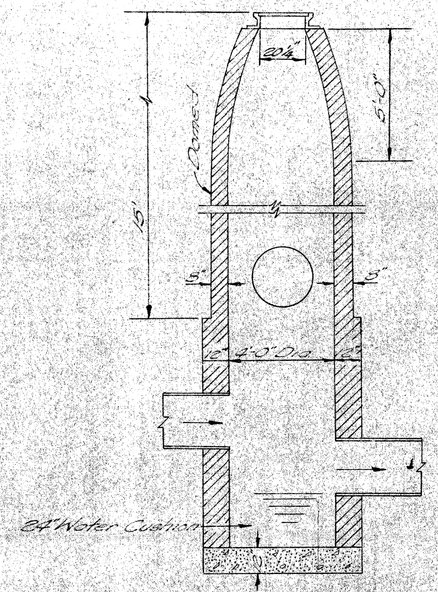

DROP MANHOLE
Scale: ½"=1'-0"

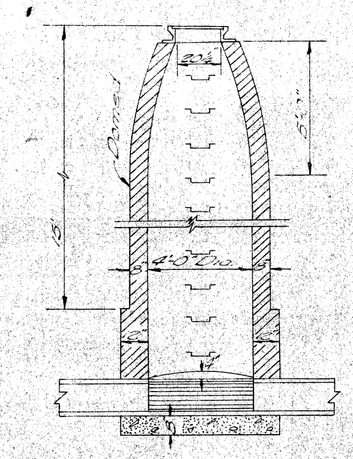

D.P.W. STANDARD MANHOLE
Scale: ½"=1'-0"

Note:
D.P.W. Standard Manhole shall be Constructed when MH.1AD is called for on Drawings for Alterations for City Sewers.

	D					
	C					
	B	Section of a Precast Manhole	S.S.	J.L.	J.W.D.	1-4-56
	A	Top 5 Feet of Manholes to be Domed	S.S.	J.L.	J.W.D.	1-4-56
WORKED BY:		DESCRIPTIONS REVISIONS	DRN.	CKD.	APP'D.	DATE

D.P.W. SPECIAL DETAIL FOR MANHOLES

FILE NO. USE NO. 1350 STENCIL	82251 F C16	STATE PROJECT	FEDERAL PROJECT	SHEET NO.
		B2251	I-75-1(183)183	55

U.P.R. DIV. NO.	STATE	PROJ. NO.	FISCAL YEAR	SHEET NO.	TOTAL SHEETS
4	MICH.	F-75-1(43)53			
ROUTE	STATE PROJECT	COUNTY	City	SHEET NO.	TOTAL SHEETS
	82251	Wayne	Detroit		

U.P.R. DIV. NO.	STATE	PROJ. NO.	FISCAL YEAR	SHEET NO.	TOTAL SHEETS
4	MICH.				
ROUTE	STATE PROJECT	COUNTY		SHEET NO.	TOTAL SHEETS

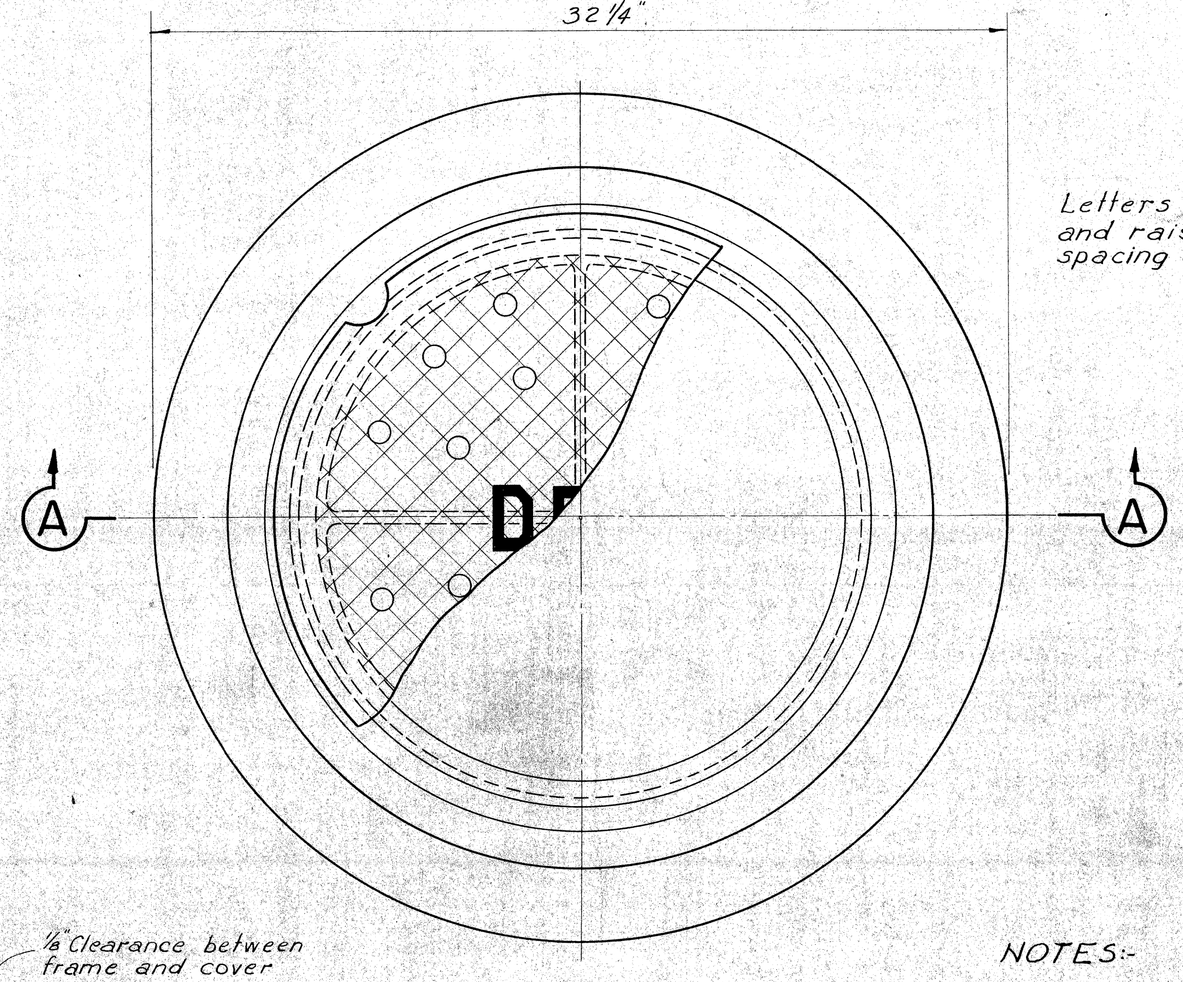

PLAN VIEW OF FRAME

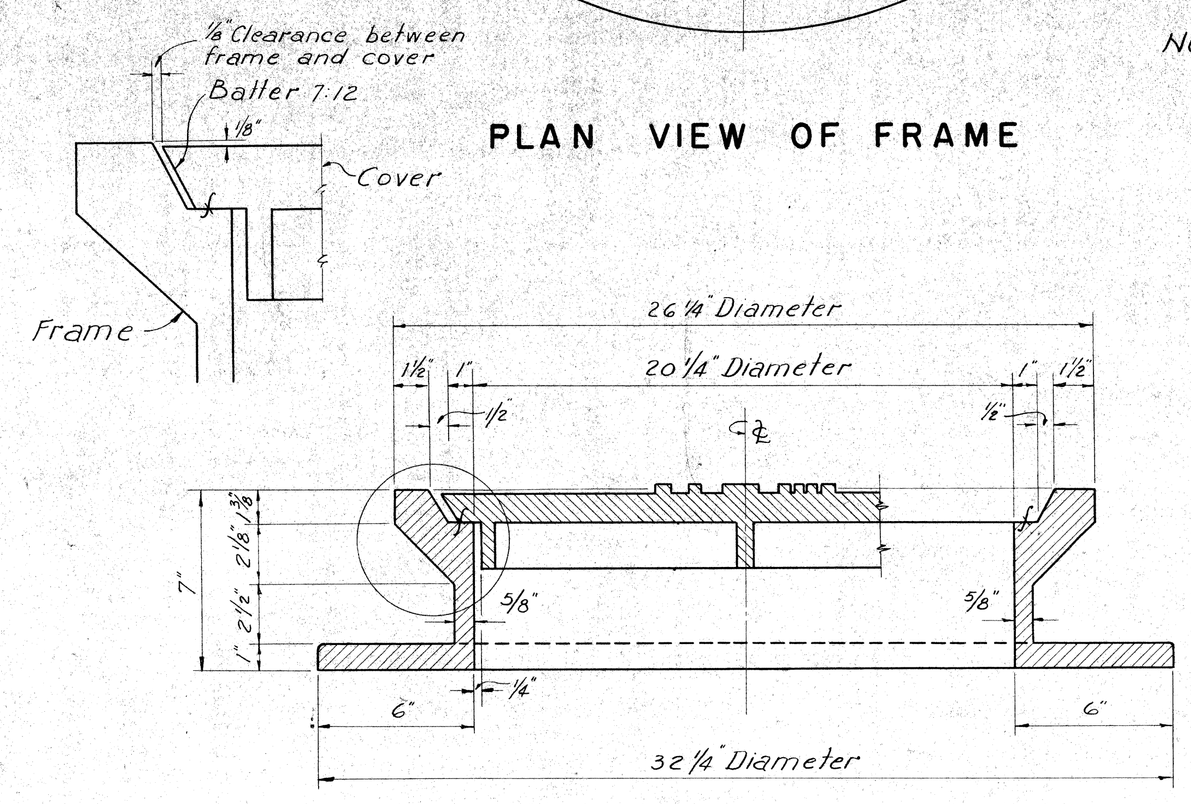

SECTION A-A

NOTES:-

Frame and cover to be gray iron castings.
Total weight = 409# (Perf cover)
Manhole frame = 262#
Cover (Perf) = 147#
Cover (Blank) = 157#

The seating face of the cover and the seat for same on the frame shall be machine finished so that the cover shall have an even bearing on its seat at all points without rocking or tilting.

SCALE 3" = 1'

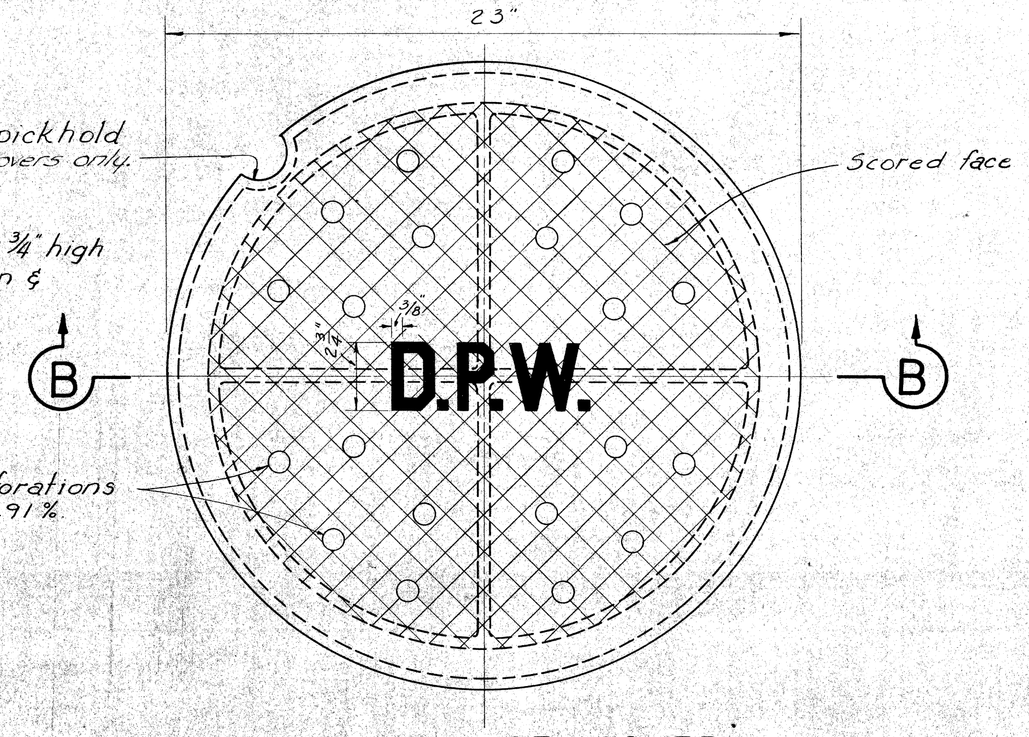

PLAN VIEW OF COVER

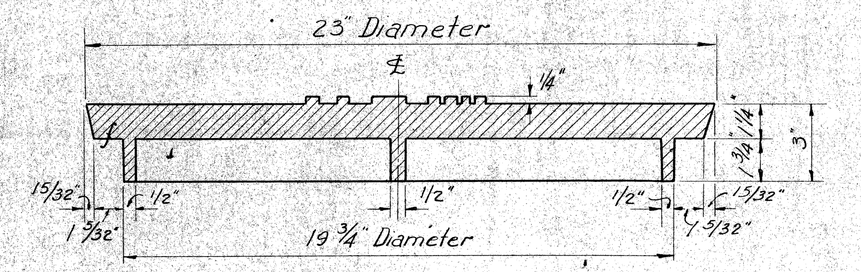

SECTION B-B

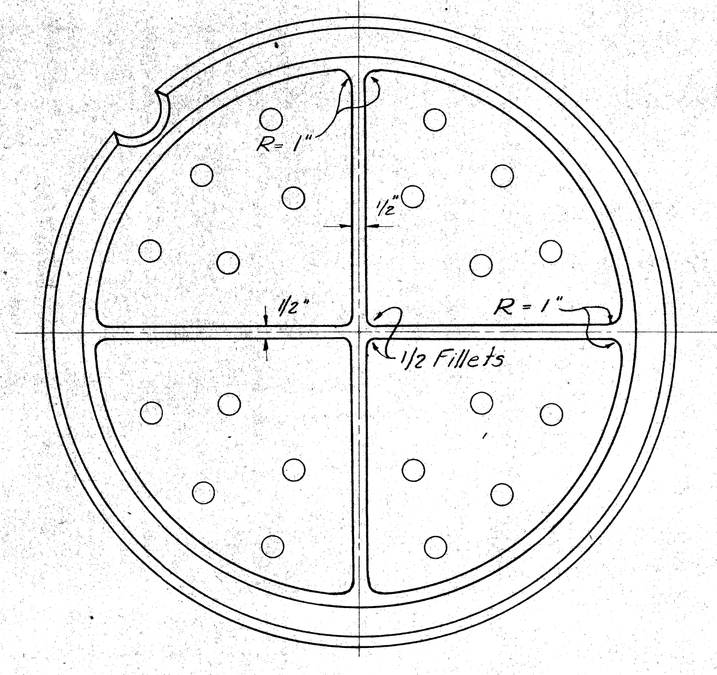

BOTTOM VIEW OF COVER

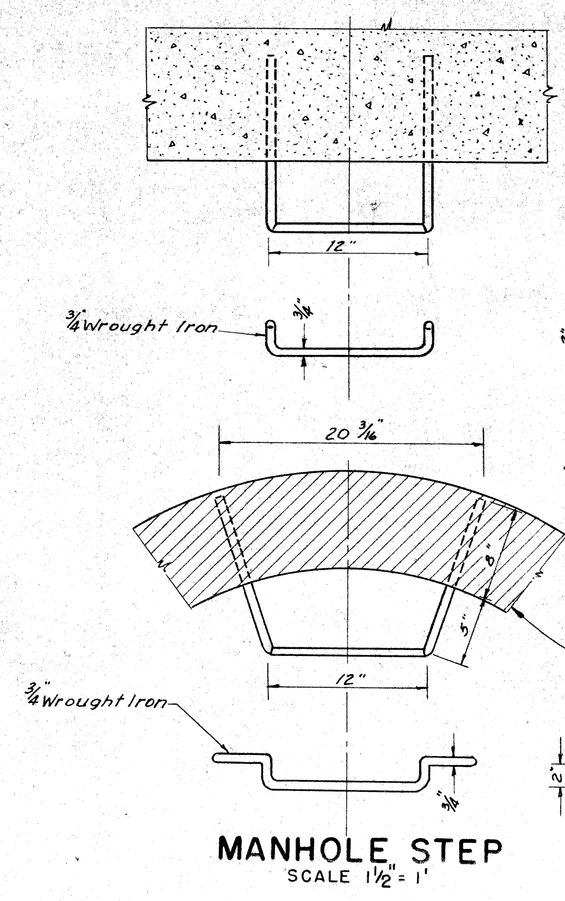

Cast Iron Manhole Steps:
Cast iron manhole steps shall be 10"x10"x3" as manufactured by the Neenah Foundry Co. R-1980E, or by the Clow National F3650, or by the East Jordan Iron Works 1161, or approved equal.

MANHOLE STEP
SCALE 1 1/2" = 1'

Noted By	No.	DESCRIPTIONS	DEV.	CKD	APP'D	DATE
	D					
	C					
	B	Added Specs for C.I. Manhole Steps	S.S.	J.L.	J.W.O.	1-43
	A	Deleted "Mile Steel" From M.H. Steps	S.S.	J.L.	J.W.O.	1-43
		REVISIONS				

SPECIAL DETAIL OF MANHOLE FRAME AND COVER AD

FILE No. W.R. No. SIGN STENCIL	STATE PROJECT	F.A. NO.	SHEET No.
8225I F C16	82251		56

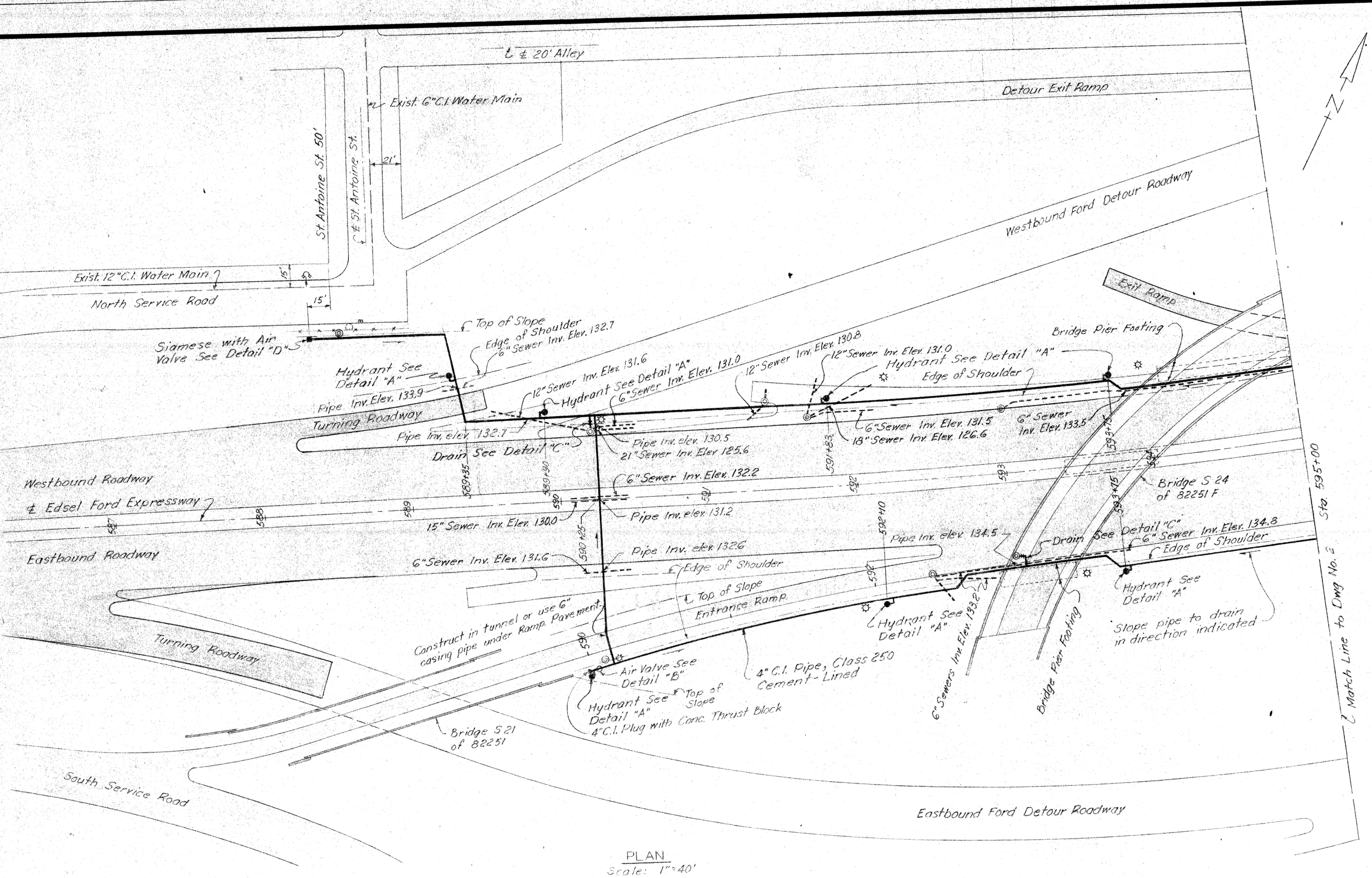

PLAN
Scale: 1"=40'

QUANTITES

ITEM	AMOUNT	
3" C.I. Water Main	73	L.F.
4" C.I. Water Main	1987	L.F.
3" Fire Hydrants	11	Ea.
4" Gate Valves and Boxes	2	Ea.
4" Siamese Standpipes	1	Ea.
1" Air Valves and Wells	3	Ea.
Sand Lime Mixture (Compacted in place)	50	C.Y.

Deleted by Auth.# 1004

LEGEND

Existing C.I. Water Mains	
Existing D.F.D. Fire Hydrant	
Proposed C.I. Fire Main	
Proposed Hydrant	
Proposed Siamese with Air Valve	
Proposed Air Valve & Well	
Sewer Manholes or Catch Basin	
Boulevard Light	
Proposed Gate Valve & Box	
Public Lighting Com. Handhole	
Sewer	

NOTES:
All Hydrants shall be located 4'-6" from edge of Bit. Shoulder Surfacing.
Fire Mains to be laid on a grade to drain system as indicated. The min. allowable slope is ⅛" per foot.
A min. of 4' of cover (top of pipe to surface of pavement or ground) shall be maintained on all Fire Mains.
Not all of the existing or proposed Utilities are shown. Utility Drawings should be consulted for latest information.

This Sheet Void by Auth.# 1004

CONTROL SECTION 82251-F

CITY OF DETROIT
INTERCHANGE OF
WALTER P CHRYSLER & EDSEL FORD EXPRESSWAYS
FIRE PROTECTION SYSTEM

DEPARTMENT OF WATER SUPPLY
CORRECT W.A.H. J.K. APPROVED O.G. Lundin DATE

DETROIT FIRE DEPARTMENT
CORRECT [illegible] APPROVED [illegible] DATE

DRAWING NO. 1 OF 3 | JOB NO. D-402-79A

MICHIGAN STATE HIGHWAY DEPARTMENT

PENTAD ENGINEERS, INC.
CONSULTING ENGINEERS
806 PARK AVENUE BUILDING
DETROIT 26, MICHIGAN

		DATE
DRAWN BY	W.S.	8-10-61
CHECKED BY	J.K.	8-11-61

REVISIONS

NO.	DESCRIPTION	DATE	BY

SQUAD BOSS		
DRAWN BY		
TRACED BY		
CHECKED BY		

SHEET 57 OF

82251 F C16

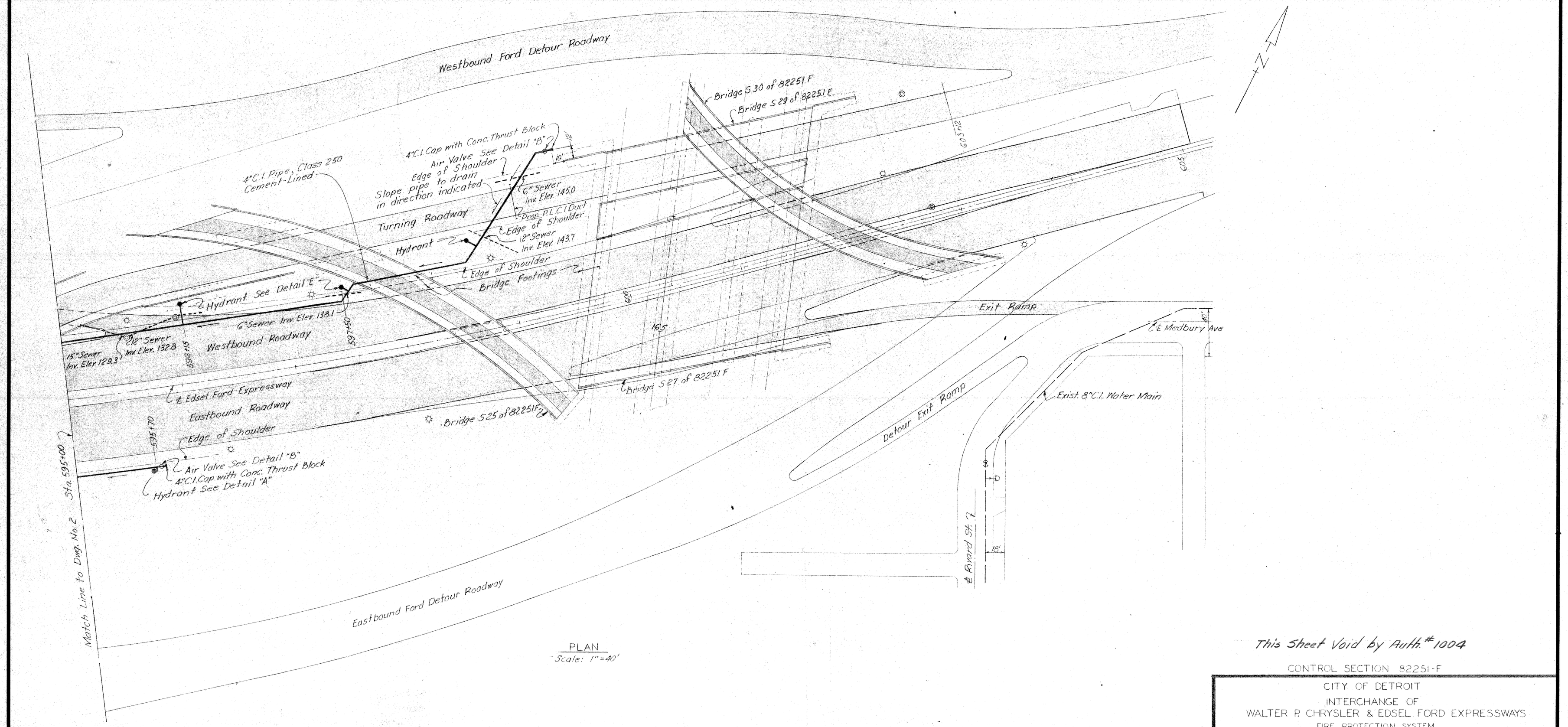

PLAN
Scale: 1" = 40'

This Sheet Void by Auth. # 1004

CONTROL SECTION 82251-F

CITY OF DETROIT
INTERCHANGE OF
WALTER P. CHRYSLER & EDSEL FORD EXPRESSWAYS
FIRE PROTECTION SYSTEM

DEPARTMENT OF WATER SUPPLY
CORRECT W.A.H. APPROVED _____ DATE _____

DETROIT FIRE DEPARTMENT
CORRECT _____ APPROVED _____ DATE _____

DRAWING NO. 2 OF 3 | JOB NO. D-402-9A

MICHIGAN STATE HIGHWAY DEPARTMENT

PENTAD ENGINEERS, INC.
CONSULTING ENGINEERS
806 PARK AVENUE BUILDING
DETROIT 26 MICHIGAN

		DATE
DRAWN BY	W.S.	8-10-61
CHECKED BY	J.K.	8-11-61

REVISIONS

NO.	DESCRIPTION	DATE	BY

SQUAD BOSS		
DRAWN BY		
TRACED BY		
CHECKED BY		

SHEET 58 OF

82251 F C16

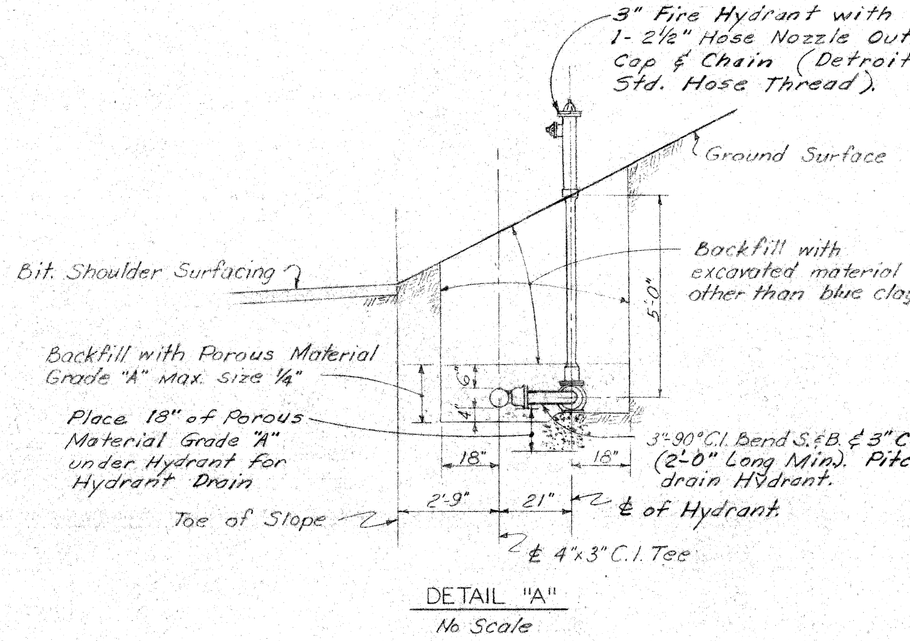

DETAIL "A"
No Scale

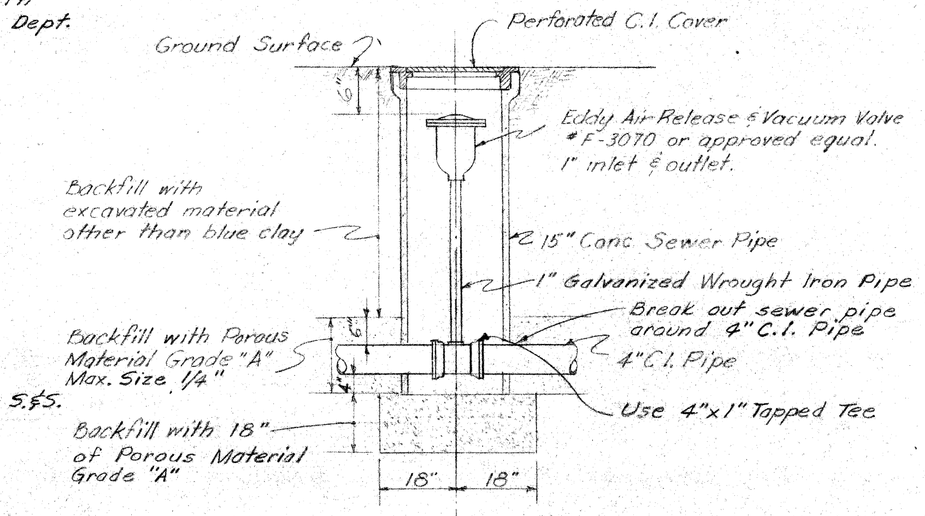

DETAIL "B"
No Scale

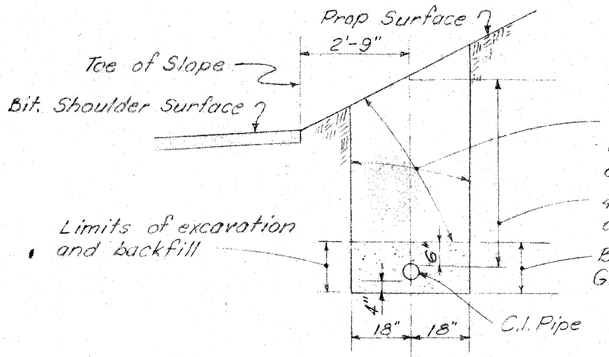

Trench Section along Edsel Ford Expressway
No Scale

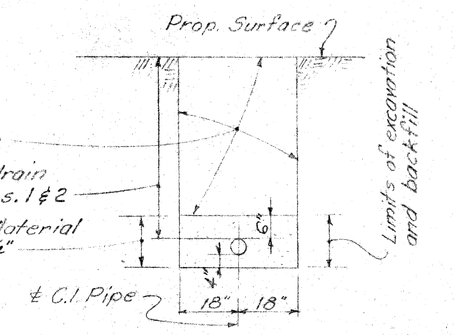

Trench Section outside Existing or Proposed Pavement or Bit. Shoulder Surfacing
No Scale

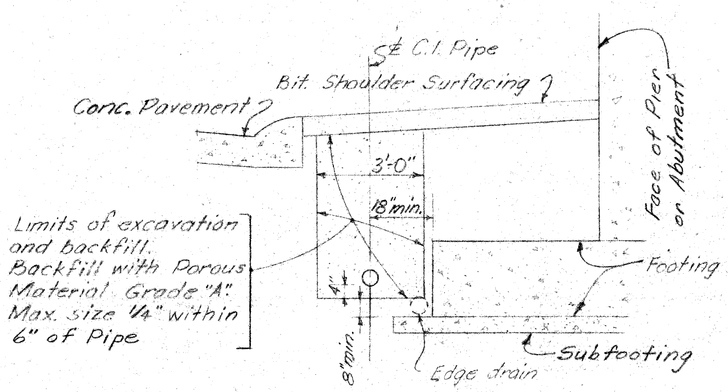

Trench Section along Edsel Ford Expressway at Bridge Piers or Abutments.
No Scale

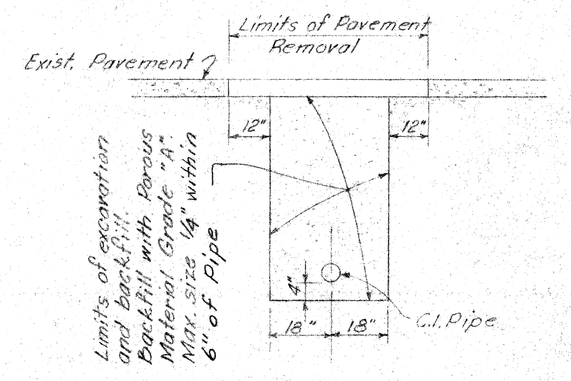

Trench Section under Existing Pavement or Bit. Shoulder Surfacing.
No Scale

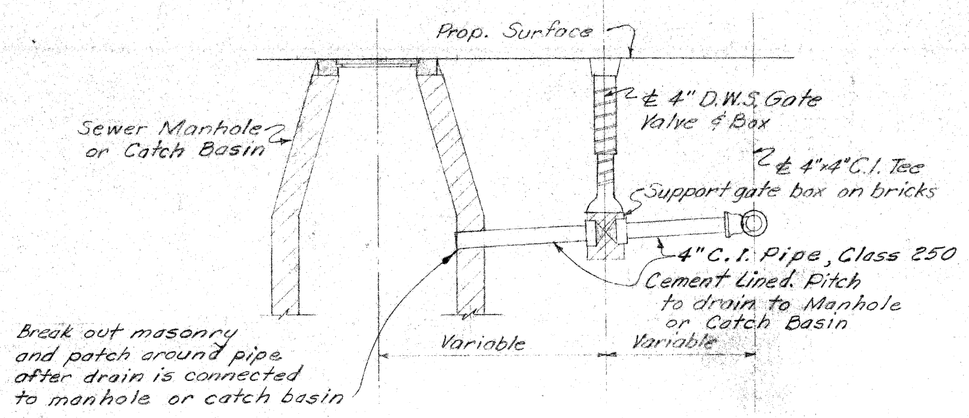

DETAIL "C"
No Scale

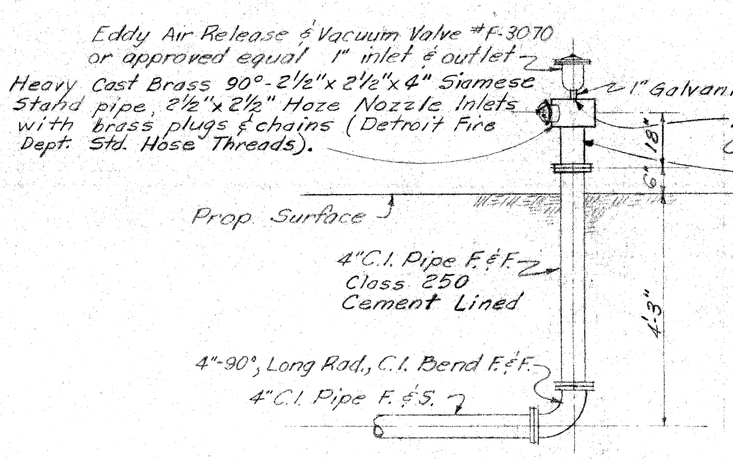

DETAIL "D"
No Scale

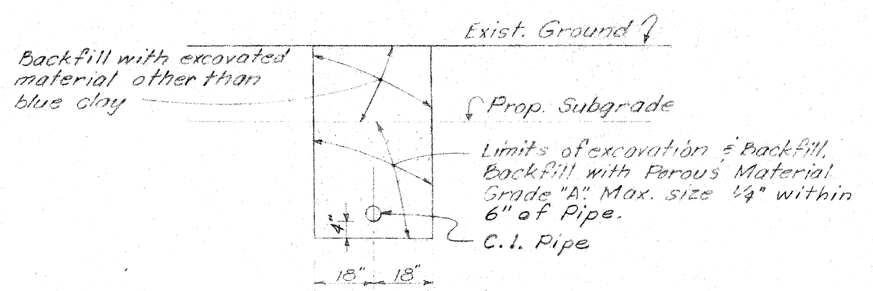

Trench Section under Prop. Pavement or Bit. Shoulder Surfacing
No Scale

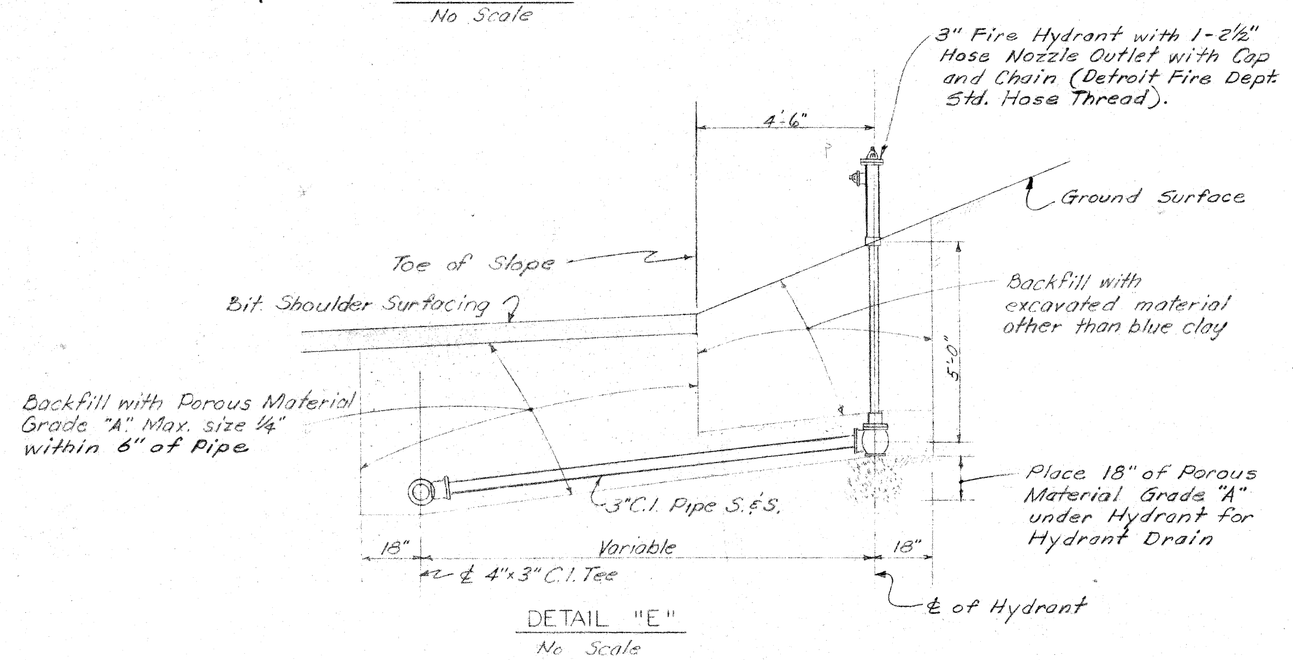

DETAIL "E"
No Scale

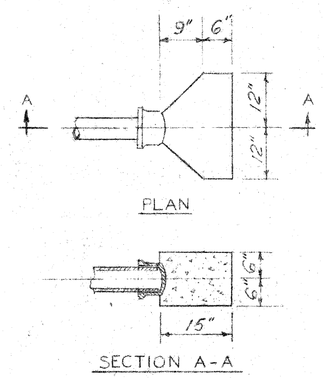

CONCRETE THRUST BLOCK FOR 4" C.I. PLUG OR CAP
No Scale

This Sheet Void by Auth. #1004

CONTROL SECTION 82251-F

CITY OF DETROIT
INTERCHANGE OF
WALTER P CHRYSLER & EDSEL FORD EXPRESSWAYS
FIRE PROTECTION SYSTEM

DEPARTMENT OF WATER SUPPLY
CORRECT W.A.H. APPROVED _____ DATE _____

DETROIT FIRE DEPARTMENT
CORRECT _____ APPROVED _____ DATE _____

DRAWING NO. 3 OF 3 | JOB NO. D-402-9A

MICHIGAN STATE HIGHWAY DEPARTMENT

PENTAD ENGINEERS, INC.
CONSULTING ENGINEERS
806 PARK AVENUE BUILDING
DETROIT 26, MICHIGAN

	DATE
DRAWN BY M.S.	8-10-61
CHECKED BY J.K.	8-11-61

REVISIONS

NO.	DESCRIPTION	DATE	BY

SQUAD BOSS	
DRAWN BY	
TRACED BY	
CHECKED BY	

SHEET 59 OF

82251 F C16

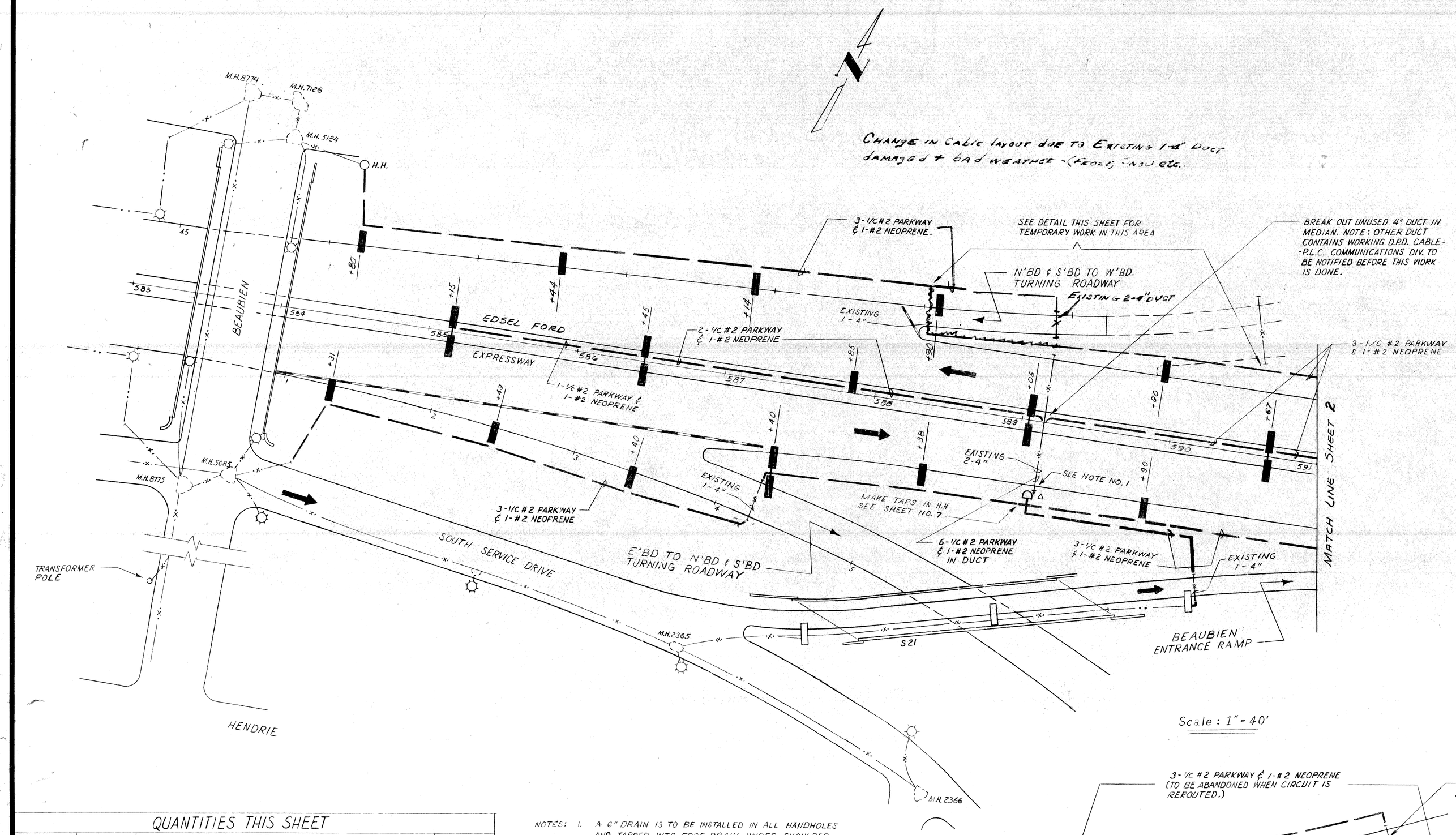

Scale : 1" = 40'

LEGEND

- EXISTING P.L.C. DUCT RUN
- EXISTING MANHOLE
- OR EXISTING U.G. STREET LIGHTING UNIT
- INSTALL SALVAGED FDN-94 ST. LTG. UNIT ON 35' SALVAGED WOOD POLE.
- EXISTING POLICE OR FIRE BOX.
- TIMBER & SNOWFENCE BARRICADE.
- EXISTING PARKWAY CABLE.
- PROPOSED PARKWAY CABLE - NO. & SIZE AS INDICATED.
- PROPOSED SINGLE DUCT RUN - SIZE AS INDICATED.
- PROPOSED MULTIPLE DUCT RUN - NO. & SIZE AS INDICATED.
- PROPOSED U.G. FLUORESCENT ANCHOR BASE ST. LTG. UNIT ON NEW FDN. #801A-TH300 STD. WITH SINGLE 8' ARM; 20KL., 4065 LUMINAIRE AND HIGH POWER FACTOR BALLASTS RATED FOR 277 V. OPERATION. EACH BALLAST IS TO OPERATE TWO F72T12 CW/HO LAMPS AT 1 AMP. AND SHALL START RELIABLY AT -20° F.
- SAME AS ABOVE EXCEPT INSTALL ON BRIDGE.
- PROPOSED STREET TYPE "D" HANDHOLE
- PROPOSED DOUBLE FLUORESCENT ANCHOR BASE U.G. ST. LTG. UNIT ON NEW FDN. #801A-TH300 STD. WITH TWIN 8' ARMS & TWO LUMINAIRES. LUMINAIRES & BALLASTS AS DESCRIBED ABOVE.
- SAME AS ABOVE EXCEPT INSTALL ON BRIDGE.
- PROPOSED U.G. FLUORESCENT ANCHOR BASE ST. LTG. UNIT #801A-TH300 WITH 8' ARM MINUS LUMINAIRE - INSTALL ON NEW FDN.
- SAME AS ABOVE EXCEPT INSTALL ON BRIDGE.
- PROPOSED TRAFFIC SIGN

QUANTITIES THIS SHEET

ITEM	AMOUNT
600 V., 1-1/C #2 PARKWAY CABLE & 1-#2 NEOPRENE WIRE - FURNISH & INSTALL	~~136~~ 142 L.F.
600 V., 2-1/C #2 PARKWAY CABLES & 1-#2 NEOPRENE WIRE - FURNISH & INSTALL	~~260~~ 212 L.F.
600 V., 3-1/C #2 PARKWAY CABLES & 1-#2 NEOPRENE WIRE - FURNISH & INSTALL	~~2440~~ 2253 L.F.
600 V., 6-1/C #2 PARKWAY CABLES & 1-#2 NEOPRENE WIRE - FURNISH & INSTALL	~~60~~ 54 L.F.
600 V., 3-1/C #2 LEAD COVERED CABLES & 1-#2 NEOPRENE WIRE - FURNISH & INSTALL	~~370~~ 378 L.F.
U.G. ANCHOR BASE FLUORESCENT ST. LTG. UNITS - FURNISH & INSTALL ON NEW FOUNDATION	11 EA.
STREET TYPE "D" HANDHOLE	1 EA.
U.G. ANCHOR BASE DOUBLE ARM FLUORESCENT ST. LTG. UNITS - FURNISH & INSTALL ON NEW FDN.	5 EA.
600 V., 3-1/C #2 LEAD COVERED CABLES - FURNISH & INSTALL	~~52~~ 44 L.F.
600 V., 1-1/C #2 LEAD COVERED CABLE & 1-1/C #2 PARKWAY CABLE - FURNISH & INSTALL	~~160~~ 151 L.F.

ALL ITEMS REVISED by REC. '63

NOTES:
1. A 6" DRAIN IS TO BE INSTALLED IN ALL HANDHOLES AND TAPPED INTO EDGE DRAIN UNDER SHOULDER OF DEPRESSED ROADWAY. COST OF DRAIN TO BE INCIDENTAL TO CONSTRUCTION OF HANDHOLE. OVERALL DEPTH OF HANDHOLE IS TO BE 3½'. FRAME OF HANDHOLE TO BE ½" ABOVE FINISHED GRADE OF ASPHALT SHOULDER. AFTER CABLE IS INSTALLED SEAL CABLE ENTRANCES WITH J.M. DUX-SEAL OR APPROVED EQUAL.
2. LIGHTING UNITS IN MEDIAN MAY BE SUBJECT TO ± 6 FT. CHANGE FROM STATION INDICATED DUE TO POSSIBLE CONFLICT WITH GUARD RAIL. P.L.C. TO BE CONSULTED IN EACH CASE WHERE CHANGE IN STATION IS REQUIRED.

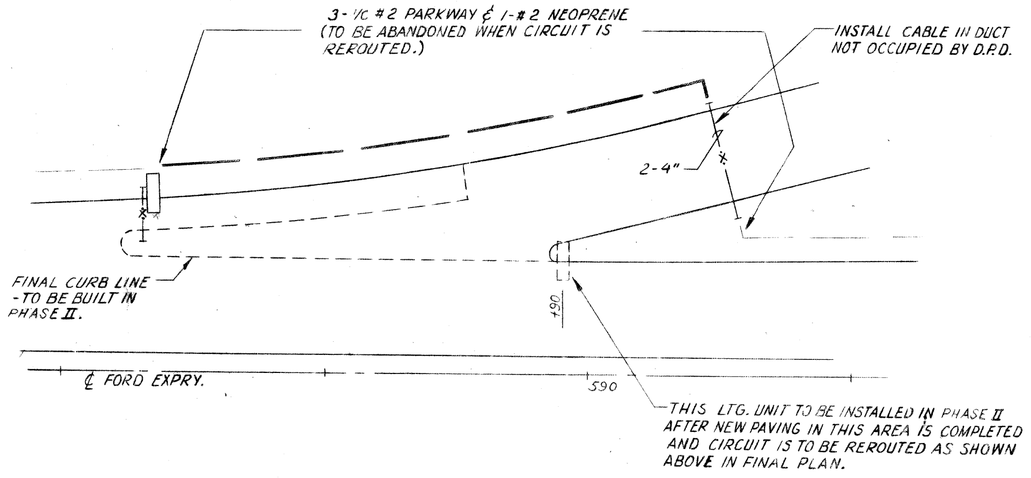

DETAIL
TEMPORARY CABLE ROUTE ON N. SIDE DEPRESSED RDWY.
STA. 588 TO STA. 591

SCALE: 1"=40'-0"

GENERAL NOTES:
1. ALL STANDARDS IN BRIDGE RAIL SHALL HAVE THE HANDHOLE FACING THE CURB. ALL OTHER STANDARDS (EXCEPT THOSE IN MEDIAN STRIP) SHALL HAVE THE HANDHOLE ON THE SIDE OPPOSITE APPROACHING TRAFFIC. STANDARDS IN THE MEDIAN STRIP SHALL HAVE THE HANDHOLE ON THE EAST SIDE OF THE SHAFT.
2. ALL MISCELLANEOUS CIRCUIT REVISIONS, INSTALLATION AND REMOVAL OF JUMPERS, ETC., THE PAYMENT FOR WHICH IS NOT SPECIFICALLY INCLUDED IN OTHER ITEMS, SHALL BE CONSIDERED AS INCIDENTAL TO THE WORK AS A WHOLE AND WILL NOT BE PAID FOR SEPARATELY.

CITY OF DETROIT
PUBLIC LIGHTING COMMISSION
GENERAL PLAN
STAGE II - FORD - CHRYSLER INTERCHANGE

DRAWN BY	FILE NO.
D-E	58-10
CHECKED BY	SHEET NO.
	1 OF 8
APPROVED BY	DATE
	4-1-61

MICHIGAN STATE HIGHWAY DEPARTMENT
WALTER P. CHRYSLER EXPRESSWAY

REVISIONS

NO.	DESCRIPTION	DATE	BY

SQUAD BOSS		
DRAWN BY		
TRACED BY		
CHECKED BY		

SHEET 60 OF

82251 F C16

NOTES:

A 6" DRAIN IS TO BE INSTALLED IN ALL HANDHOLES AND TAPPED INTO EDGE DRAIN UNDER SHOULDER OF DEPRESSED ROADWAY. COST OF DRAIN TO BE INCIDENTAL TO CONSTRUCTION OF HANDHOLE. OVERALL DEPTH OF HANDHOLE IS TO BE 3 1/2 FT. FRAME OF HANDHOLE TO BE 1/2" ABOVE FINISHED GRADE OF ASPHALT SHOULDER. AFTER CABLE HAS BEEN INSTALLED SEAL CABLE ENTRANCES WITH J.M. DUX-SEAL OR APPROVED EQUAL.

1. TEMPORARILY TERMINATE PARKWAY CIRCUIT IN STD. UNTIL NEXT LAMP EAST CAN BE INSTALLED. (SEE NOTE ON NEXT LAMP, SHEET NO. 3)

THE THREE CABLES IN THIS RUN ARE TO BE TAGGED C7, C8 & C9 AND LOOPED INTO STDS. WITH THE CORRESPONDING NOTATION. 30" OF EACH CABLE LOOP TO BE COILED IN STD. FOR FUTURE CONNECTION.

DELETED BY RECOMMENDATION NO 18

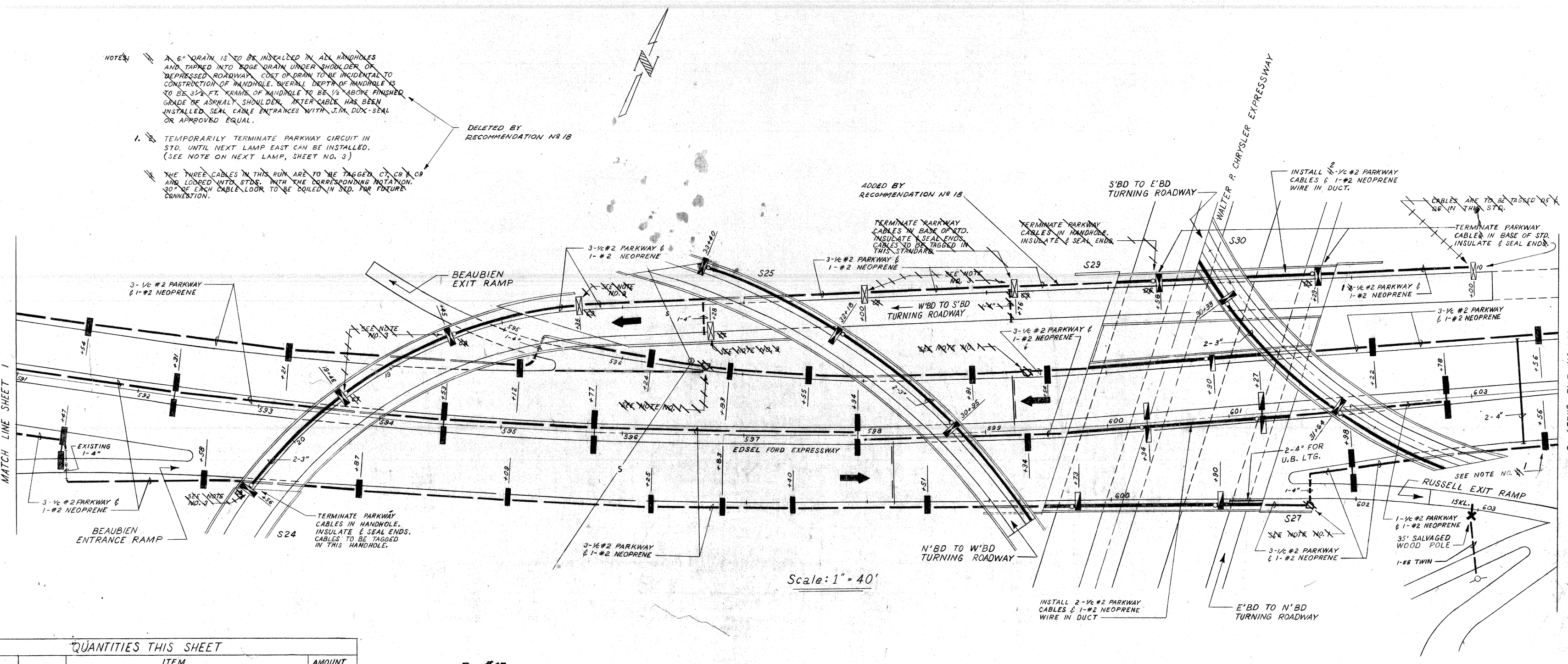

Scale: 1" = 40'

QUANTITIES THIS SHEET

		ITEM	AMOUNT	
		1-4" ENCASED CONDUIT	~~XX~~ ~~62~~ 78 L.F.	→ Increased by Rec. #45
		2-4" ENCASED CONDUIT	~~99~~ 94 L.F.	→ Increased by Rec #45
		600V, 1-1/c #2 PARKWAY CABLE & 1-#2 NEOPRENE WIRE — FURNISH & INSTALL	~~350~~ 353 L.F.	→ Increased by Rec. #45
		600V, 2-1/c #2 PARKWAY CABLES & 1-#2 NEOPRENE WIRE — FURNISH & INSTALL	~~255~~ 426 L.F.	→ REVISED BY RECOMMENDATION NO 18
		600V, 3-1/c #2 PARKWAY CABLES & 1-#2 NEOPRENE WIRE — FURNISH & INSTALL	~~4200~~ 4374 L.F.	→ Increased by Rec. #45
		XXXX XXXX XX XXXXX	~~XX~~ ~~XX~~	
		U.G. ANCHOR BASE FLUORESCENT ST. LTG. UNITS — FURNISH & INSTALL ON NEW FOUNDATION	19 EA.	
		U.G. ANCHOR BASE DOUBLE ARM FLUORESCENT ST. LTG. UNITS — FURNISH & INSTALL ON NEW FOUNDATION	7 EA.	
		U.G. ANCHOR BASE FLUORESCENT ST. LTG. UNITS — FURNISH & INSTALL ON BRIDGE	3 EA.	
		U.G. ANCHOR BASE DOUBLE ARM FLUORESCENT ST. LTG. UNIT — FURNISH & INSTALL ON BRIDGE	2 EA.	
		U.G. ANCHOR BASE FLUORESCENT ST. LTG. UNITS MINUS LUMINAIRES — FURNISH & INSTALL ON NEW FOUNDATION	5 EA.	
		U.G. ANCHOR BASE FLUORESCENT ST. LTG. UNITS MINUS LUMINAIRES — FURNISH & INSTALL ON BRIDGE	10 EA.	
		INSTALL 35' SALVAGED WOOD POLE	+5 EA.	→ Increased by Addn's 1006, 1007 & 1014
		INSTALL SALVAGED FORM-34 ST. LTG. UNIT WITH 15KL. LAMP ON 10' BRACKET ARM.	1 EA.	

CITY OF DETROIT
PUBLIC LIGHTING COMMISSION

GENERAL PLAN
STAGE II - FORD - CHRYSLER
INTERCHANGE

DRAWN BY	FILE NO.
DE	58-10
CHECKED BY	SHEET NO.
[illegible]	2 OF 8
APPROVED BY	DATE
G.F. Merrow	4-1-61

MICHIGAN STATE HIGHWAY DEPARTMENT

WALTER P. CHRYSLER EXPRESSWAY

REVISIONS

NO.	DESCRIPTION	DATE	BY

SQUAD BOSS			
DRAWN BY			
TRACED BY			
CHECKED BY			

SHEET 61 OF

82251 F C16

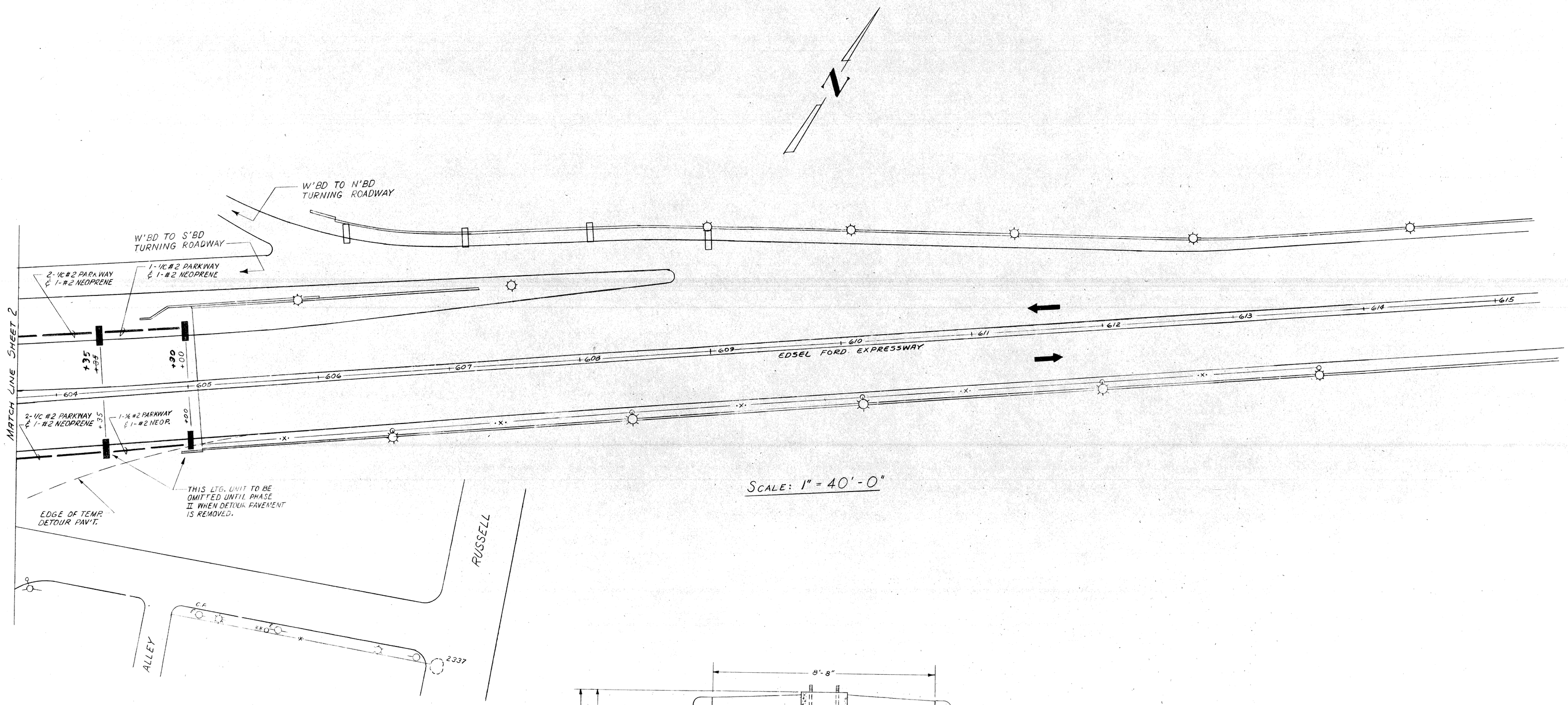

SCALE: 1" = 40'-0"

QUANTITIES THIS SHEET			
	ITEM	AMOUNT	
	600V., 1-1/c #2 PARKWAY CABLE & 1-#2 NEOPRENE WIRE - FURNISH & INSTALL	141 ~~130~~ L.F.	← Increased to 141 by Rec #15
	600V., 2-1/c #2 PARKWAY CABLES & 1-#2 NEOPRENE WIRE - FURNISH & INSTALL	127 ~~130~~ L.F.	← Decreased to 127 by Rec #15
	U.G. ANCHOR BASE FLUORESCENT ST. LTG. UNITS - FURNISH & INSTALL ON NEW FDN.	4 EA.	

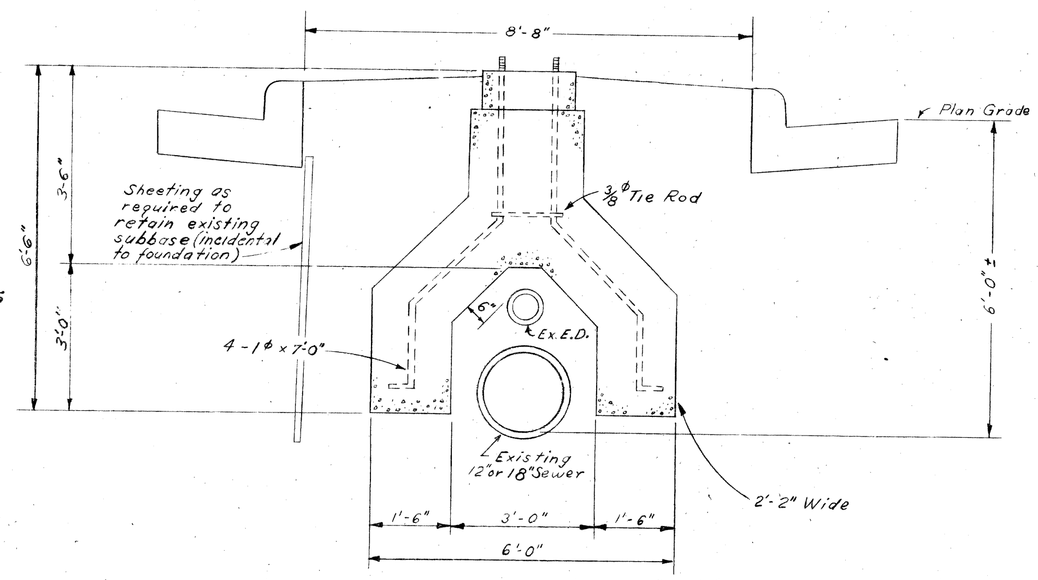

SPECIAL LIGHTING STANDARD FOUNDATION IN MEDIAN OF FORD EXPRESSWAY

CITY OF DETROIT
PUBLIC LIGHTING COMMISSION

GENERAL PLAN
STAGE II - FORD - CHRYSLER INTERCHANGE

DRAWN BY	FILE NO.
D-E	58-10
CHECKED BY	SHEET NO.
	3 OF 8
APPROVED BY	DATE
G.F. Mew	4-1-61

MICHIGAN STATE HIGHWAY DEPARTMENT

WALTER P. CHRYSLER EXPRESSWAY

REVISIONS			
NO.	DESCRIPTION	DATE	BY

SQUAD BOSS		
DRAWN BY		
TRACED BY		
CHECKED BY		

SHEET 62 OF

82251 FC16

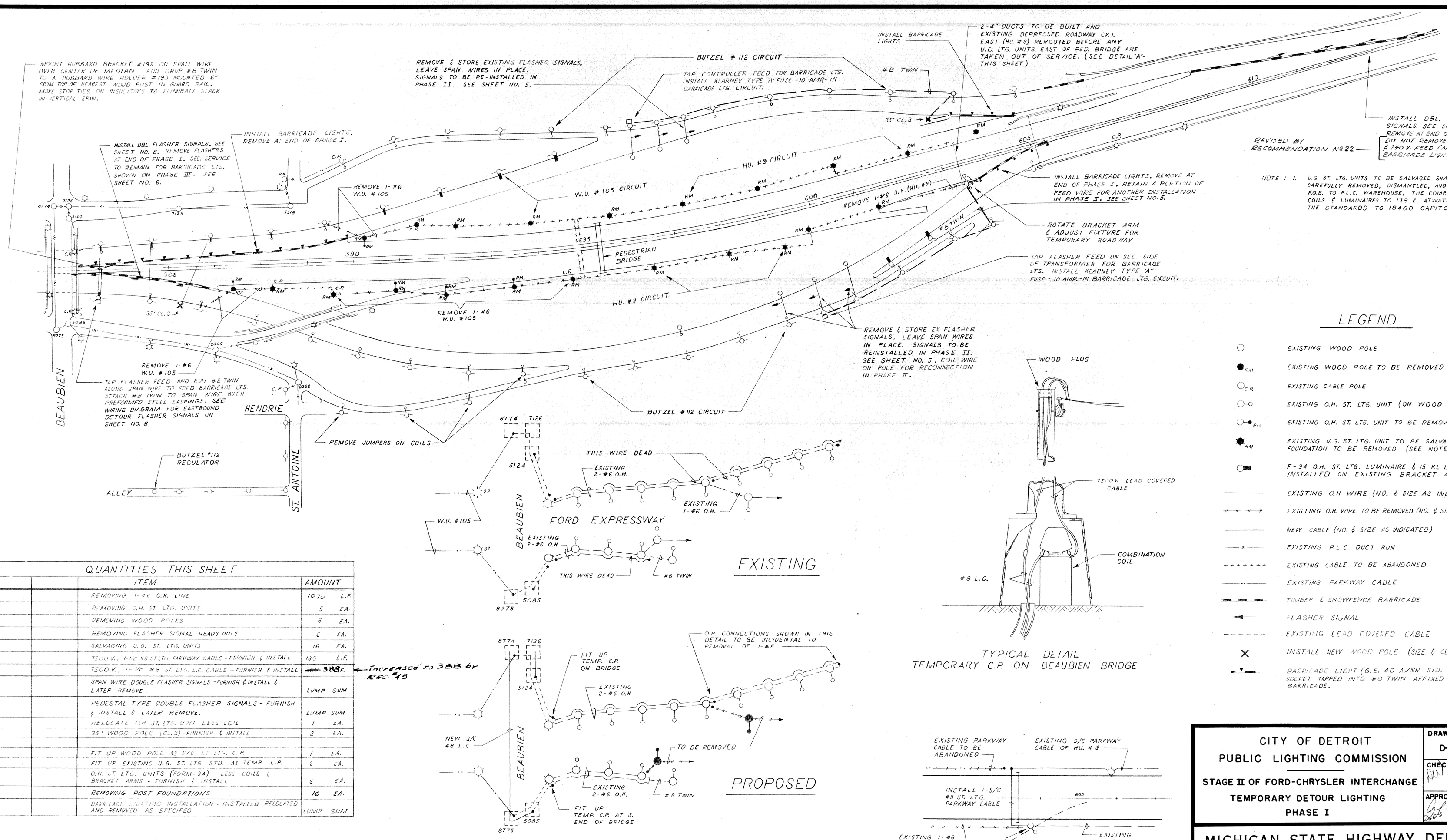

LEGEND

- EXISTING WOOD POLE
- RM — EXISTING WOOD POLE TO BE REMOVED
- C.P. — EXISTING CABLE POLE
- EXISTING O.H. ST. LTG. UNIT (ON WOOD POLE)
- RM — EXISTING O.H. ST. LTG. UNIT TO BE REMOVED
- RM — EXISTING U.G. ST. LTG. UNIT TO BE SALVAGED & FOUNDATION TO BE REMOVED (SEE NOTE 1)
- F-94 O.H. ST. LTG. LUMINAIRE & 15 KL LAMP TO BE INSTALLED ON EXISTING BRACKET ARM
- EXISTING O.H. WIRE (NO. & SIZE AS INDICATED)
- EXISTING O.H. WIRE TO BE REMOVED (NO. & SIZE AS INDICATED)
- NEW CABLE (NO. & SIZE AS INDICATED)
- EXISTING P.L.C. DUCT RUN
- EXISTING CABLE TO BE ABANDONED
- EXISTING PARKWAY CABLE
- TIMBER & SNOWFENCE BARRICADE
- FLASHER SIGNAL
- EXISTING LEAD COVERED CABLE
- INSTALL NEW WOOD POLE (SIZE & CL. AS INDICATED).
- BARRICADE LIGHT (G.E. 40 A/NR STD. BASE) IN WATER PROOF SOCKET TAPPED INTO #8 TWIN AFFIXED NEAR TOP OF BARRICADE.

QUANTITIES THIS SHEET

ITEM	AMOUNT
REMOVING 1-#6 O.H. LINE	1070 L.F.
REMOVING O.H. ST. LTG. UNITS	5 EA.
REMOVING WOOD POLES	6 EA.
REMOVING FLASHER SIGNAL HEADS ONLY	6 EA.
SALVAGING U.G. ST. LTG. UNITS	16 EA.
7500 V., 1-#6 89 STR. PARKWAY CABLE - FURNISH & INSTALL	130 L.F.
7500 V., 1-#6 #8 ST. LTG. L.C. CABLE - FURNISH & INSTALL	~~300~~ 388 L.F. ← INCREASED FROM 388 BY REC. 45
SPAN WIRE DOUBLE FLASHER SIGNALS - FURNISH & INSTALL & LATER REMOVE.	LUMP SUM
PEDESTAL TYPE DOUBLE FLASHER SIGNALS - FURNISH & INSTALL & LATER REMOVE.	LUMP SUM
RELOCATE O.H. ST. LTG. UNIT LESS COIL	1 EA.
35' WOOD POLE (CL. 3) - FURNISH & INSTALL	2 EA.
FIT UP WOOD POLE AS S/C ST. LTG. C.P.	1 EA.
FIT UP EXISTING U.G. ST. LTG. STD. AS TEMP. C.P.	2 EA.
O.H. ST. LTG. UNITS (FORM-34) - LESS COILS & BRACKET ARMS - FURNISH & INSTALL	6 EA.
REMOVING POST FOUNDATIONS	16 EA.
BARRICADE LIGHTING INSTALLATION - INSTALLED, RELOCATED AND REMOVED AS SPECIFIED	LUMP SUM

WIRING DIAGRAMS
TEMPORARY DETOUR LIGHTING
PHASE I

(RECONNECTION OF W.U. #105, AS SHOWN ABOVE, TO BE DONE THE SAME DAY TRAFFIC IS ROUTED ONTO DETOUR ROADWAY)

CITY OF DETROIT
PUBLIC LIGHTING COMMISSION

STAGE II OF FORD-CHRYSLER INTERCHANGE
TEMPORARY DETOUR LIGHTING
PHASE I

DRAWN BY	FILE NO.
D-E	58-10
CHECKED BY	SHEET NO.
	4 OF 8
APPROVED BY	DATE
	4-1-61

MICHIGAN STATE HIGHWAY DEPARTMENT

WALTER P. CHRYSLER EXPRESSWAY

REVISIONS

NO.	DESCRIPTION	DATE	BY

SQUAD BOSS	
DRAWN BY	
TRACED BY	
CHECKED BY	
SHEET 63 OF	

82251 F C16

NOTES: 1. ALL PERMANENT FLUORESCENT LIGHTING ON DEPRESSED RDWAY. TO BE INSTALLED AND READY FOR OPERATION BEFORE TRAFFIC IS REROUTED ONTO EXPRESSWAY WITH EXCEPTIONS AS NOTED.

2. BARRICADE LIGHTING INSTALLATIONS SHOWN ON THIS SHEET ARE INCLUDED IN LUMP SUM ON SHEET NO. 4.

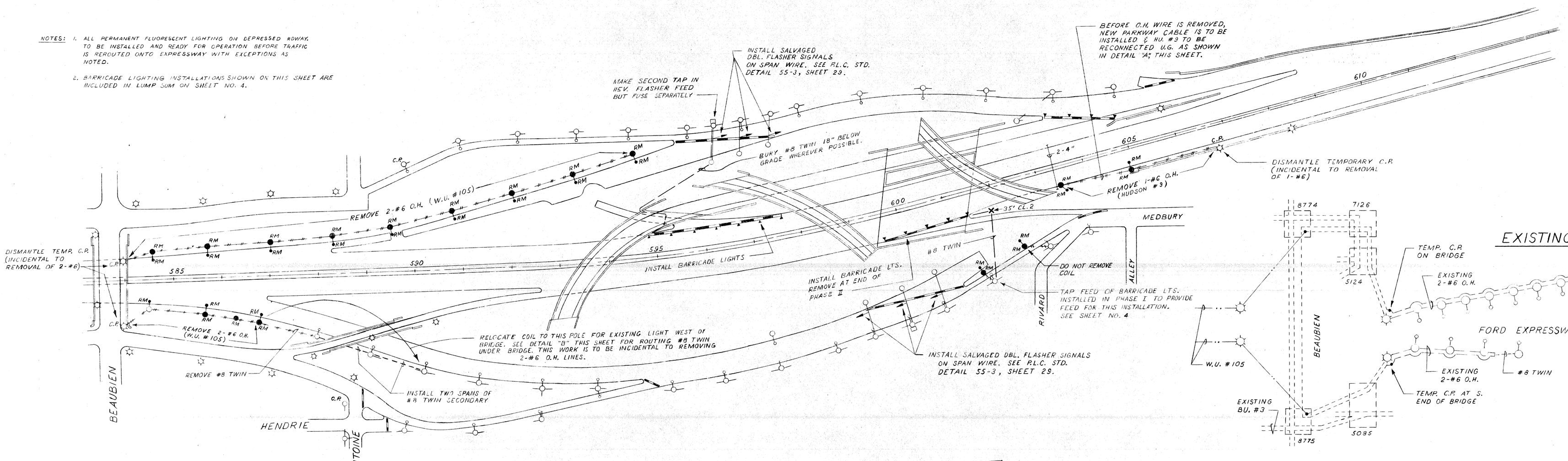

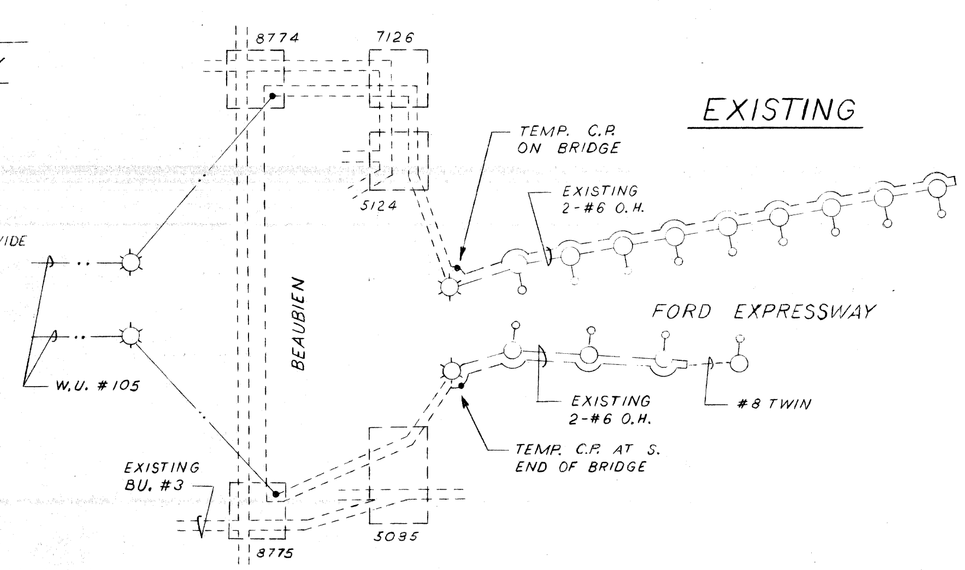

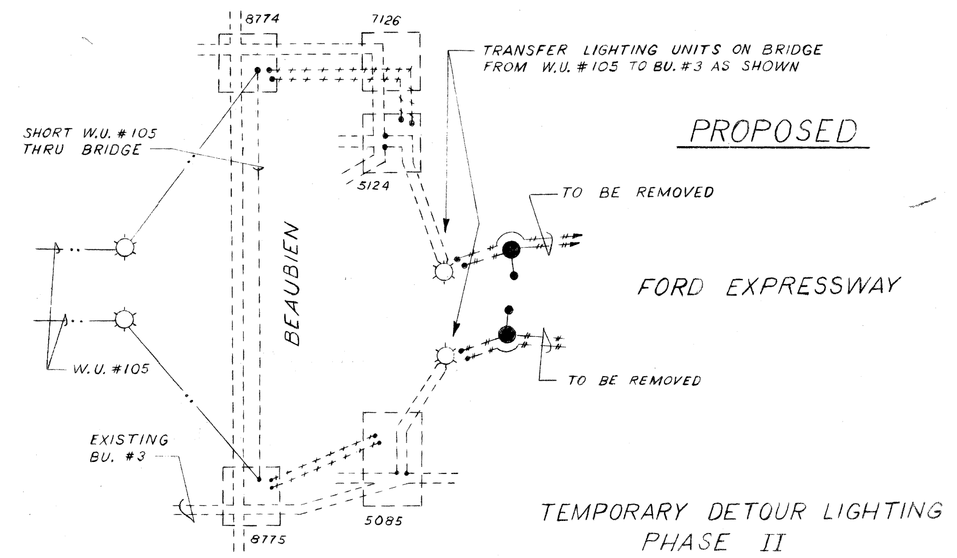

QUANTITIES THIS SHEET			
	ITEM	AMOUNT	
	REMOVING 1-#6 O.H. LINE	330 L.F.	
	REMOVING 2-#6 O.H. LINES	1370 L.F.	
	REMOVING WOOD POLES	~~+8~~ 15 EA.	DECREASED by REC. #45
	REMOVING O.H. ST. LTG. UNITS	~~+8~~ 15 EA.	
	INSTALL SALVAGED FLASHER SIGNAL HEADS ONLY	6 EA.	
	7500 V., 1-#8 ST. LTG. PARKWAY CABLE	~~330~~ 332 L.F.	INCREASED TO 332 by REC. #45
	3RD WIRE (LT. 3) - FURNISH & INSTALL	~~+3~~ 0 EA.	Deleted by Rec. #45

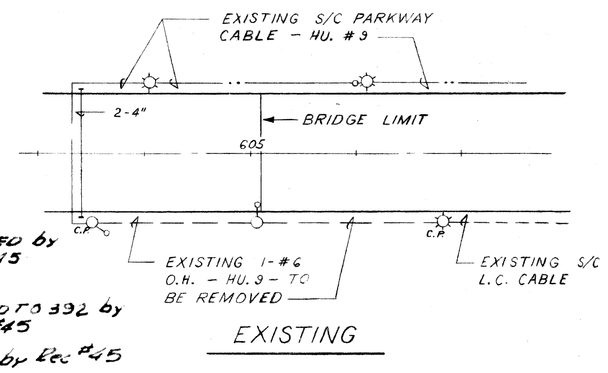

EXISTING

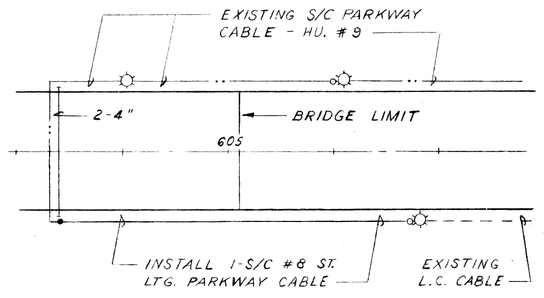

PROPOSED

DETAIL "A"

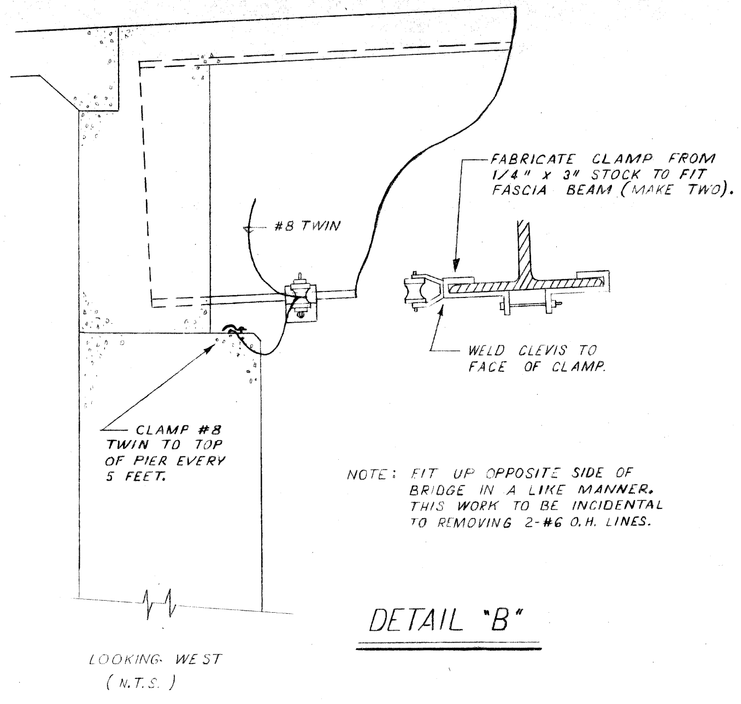

NOTE: FIT UP OPPOSITE SIDE OF BRIDGE IN A LIKE MANNER. THIS WORK TO BE INCIDENTAL TO REMOVING 2-#6 O.H. LINES.

DETAIL "B"

CITY OF DETROIT PUBLIC LIGHTING COMMISSION STAGE II OF FORD-CHRYSLER INTERCHANGE TEMPORARY DETOUR LIGHTING PHASE II	DRAWN BY D-E	FILE NO. 58-10	
	CHECKED BY	SHEET NO. 5 OF 8	
	APPROVED BY	DATE 4-1-61	

MICHIGAN STATE HIGHWAY DEPARTMENT
WALTER P. CHRYSLER EXPRESSWAY

REVISIONS			
NO.	DESCRIPTION	DATE	BY

SQUAD BOSS			
DRAWN BY			
TRACED BY			
CHECKED BY			

SHEET 64 OF

82251 F C16

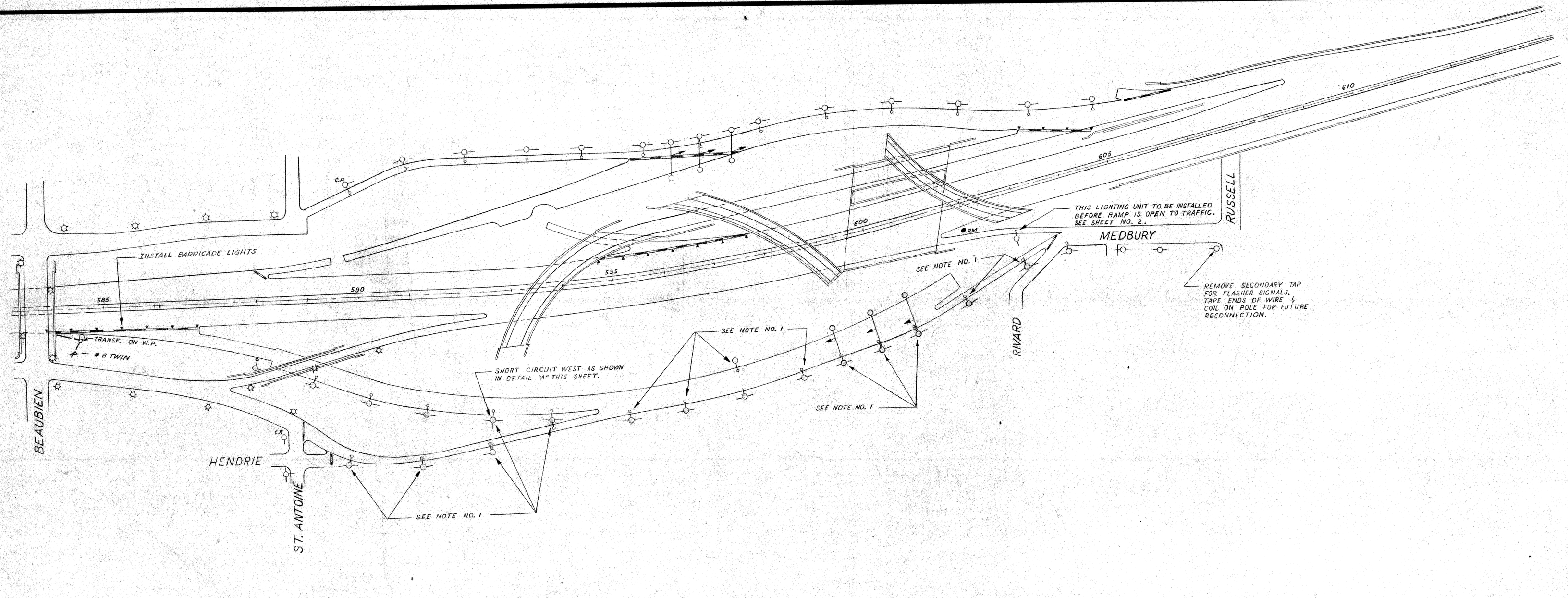

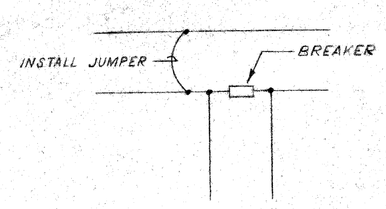

DETAIL "A"

NOTES:
1. SHORT PRIMARY OF STREET LIGHTING COIL BY INSTALLING JUMPER ACROSS BREAKER.
2. BARRICADE LIGHTING INSTALLATIONS SHOWN ON THIS SHEET ARE INCLUDED IN LUMP SUM ON SHEET NO. 4

QUANTITIES THIS SHEET

		ITEM	AMOUNT
		REMOVING WOOD POLES	1 EA.

CITY OF DETROIT
PUBLIC LIGHTING COMMISSION
STAGE II OF FORD-CHRYSLER INTERCHANGE
TEMPORARY DETOUR LIGHTING
PHASE III

DRAWN BY	FILE NO.
D-E	58-10
CHECKED BY	SHEET NO.
	6 OF 8
APPROVED BY	DATE
G.P. Mears	4-1-61

MICHIGAN STATE HIGHWAY DEPARTMENT
WALTER P. CHRYSLER EXPRESSWAY

REVISIONS

NO.	DESCRIPTION	DATE	BY

SQUAD BOSS			
DRAWN BY			
TRACED BY			
CHECKED BY			

SHEET 65 OF

82251 F C16

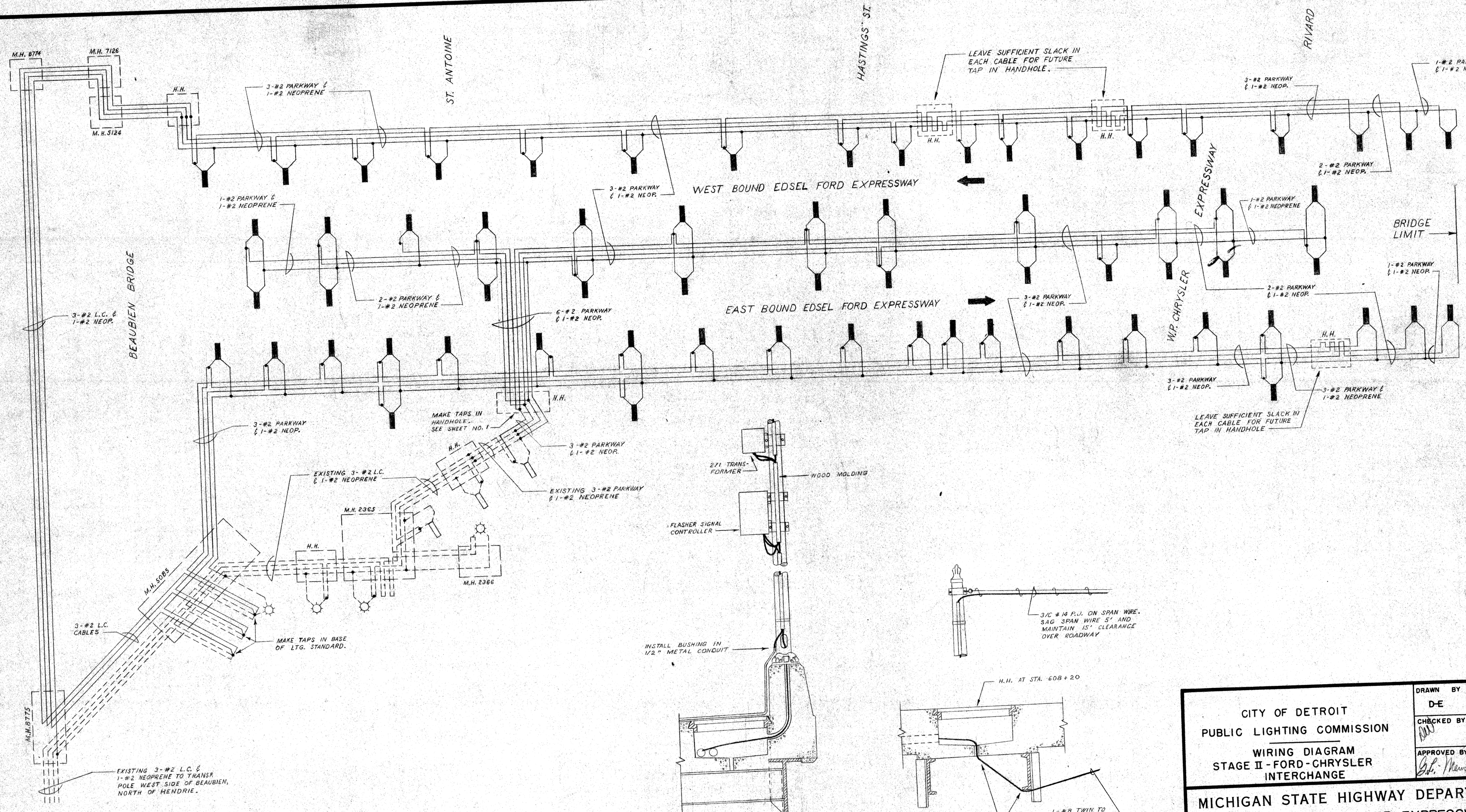

DETAILS OF FEED TO FLASHER SIGNALS ON BRIDGE

CITY OF DETROIT
PUBLIC LIGHTING COMMISSION

WIRING DIAGRAM
STAGE II - FORD - CHRYSLER INTERCHANGE

DRAWN BY	FILE NO.
D-E	58-10
CHECKED BY	SHEET NO.
DW	7 OF 8
APPROVED BY	DATE
G.L. Mears	4-1-61

MICHIGAN STATE HIGHWAY DEPARTMENT
WALTER P. CHRYSLER EXPRESSWAY

REVISIONS

NO.	DESCRIPTION	DATE	BY

SQUAD BOSS			
DRAWN BY			
TRACED BY			
CHECKED BY			

SHEET 66 OF

82251 F C16

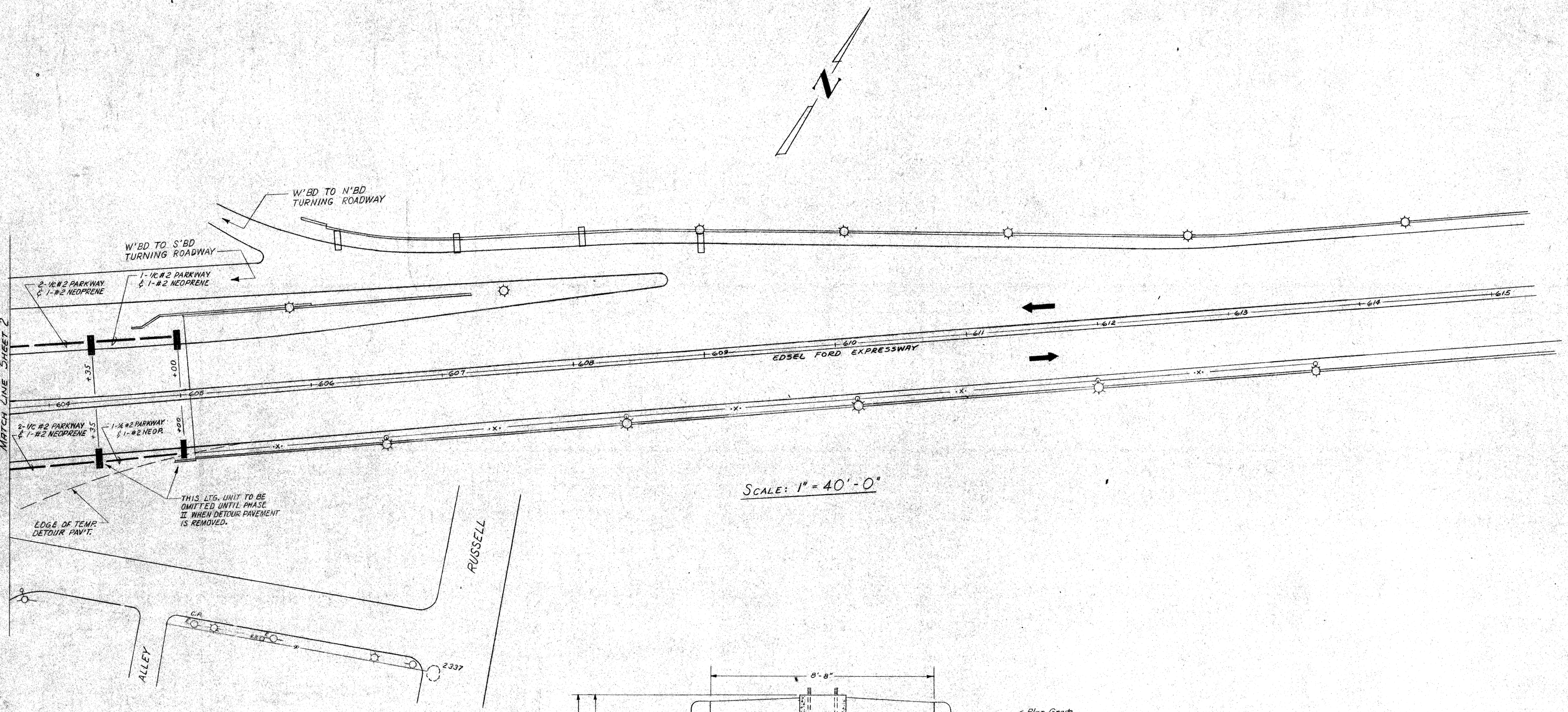

SCALE: 1" = 40'-0"

QUANTITIES THIS SHEET			
	ITEM	AMOUNT	
	600V., 1-1/c #2 PARKWAY CABLE & 1-#2 NEOPRENE WIRE - FURNISH & INSTALL	130	L.F.
	600V., 2-1/c #2 PARKWAY CABLES & 1-#2 NEOPRENE WIRE - FURNISH & INSTALL	130	L.F.
	U.G. ANCHOR BASE FLUORESCENT ST. LTG. UNITS - FURNISH & INSTALL ON NEW FDN.	4	EA.

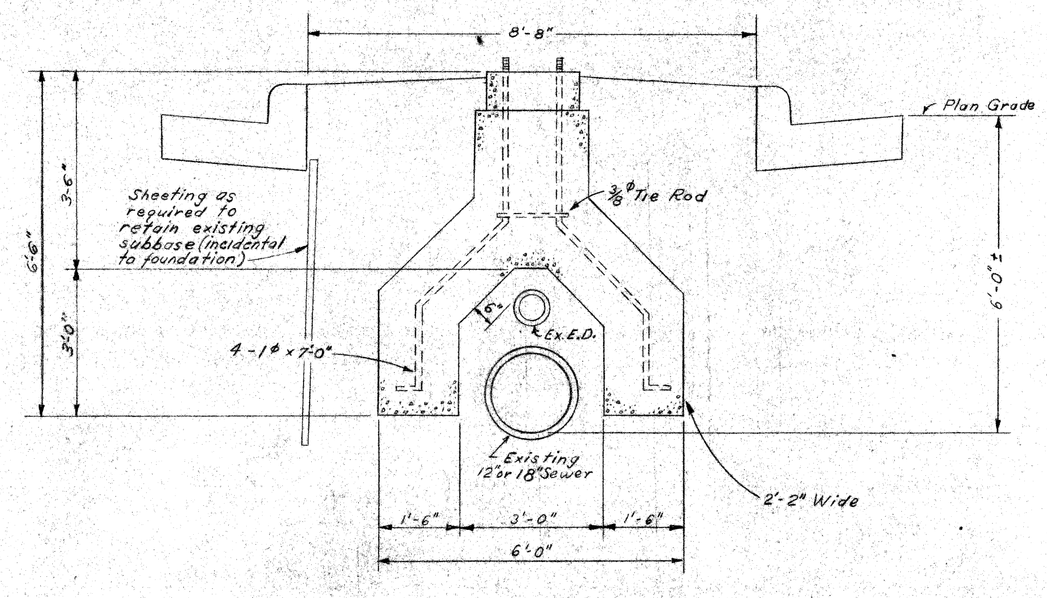

SPECIAL LIGHTING
STANDARD FOUNDATION
IN MEDIAN OF FORD EXPRESSWAY

CITY OF DETROIT
PUBLIC LIGHTING COMMISSION

GENERAL PLAN
STAGE II - FORD - CHRYSLER
INTERCHANGE

DRAWN BY	FILE NO.
D-E	58-10
CHECKED BY	SHEET NO.
RW	3 OF 8
APPROVED BY	DATE
G. L. Mann	4-1-61

MICHIGAN STATE HIGHWAY DEPARTMENT

WALTER P. CHRYSLER EXPRESSWAY

REVISIONS

NO.	DESCRIPTION	DATE	BY

SQUAD BOSS		
DRAWN BY		
TRACED BY		
CHECKED BY		

SHEET 62 OF

82251 FC16

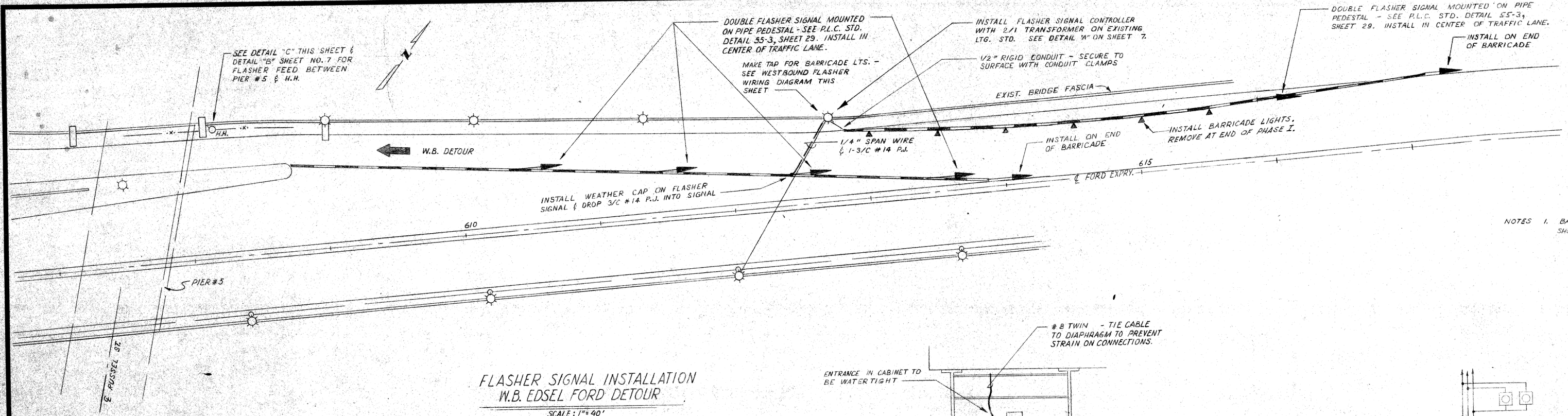

FLASHER SIGNAL INSTALLATION W.B. EDSEL FORD DETOUR

SCALE: 1" = 40'

NOTES 1. BARRICADE LIGHTING INSTALLATION SHOWN ON THIS SHEET IS INCLUDED IN LUMP SUM ON SHEET NO. 4

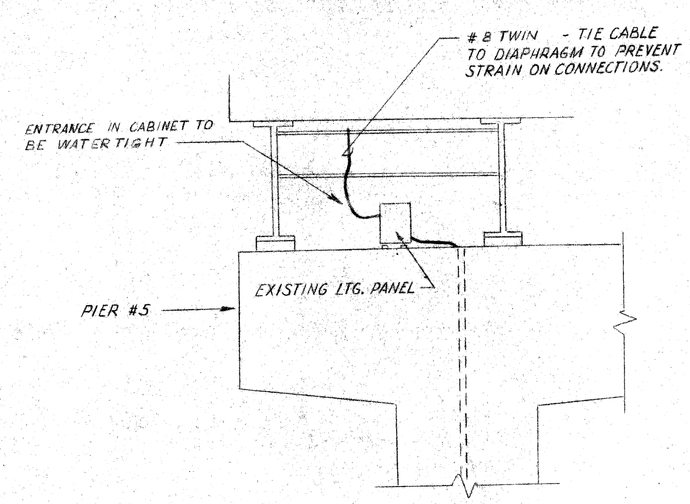

DETAIL "C" - FLASHER SIGNAL FEED

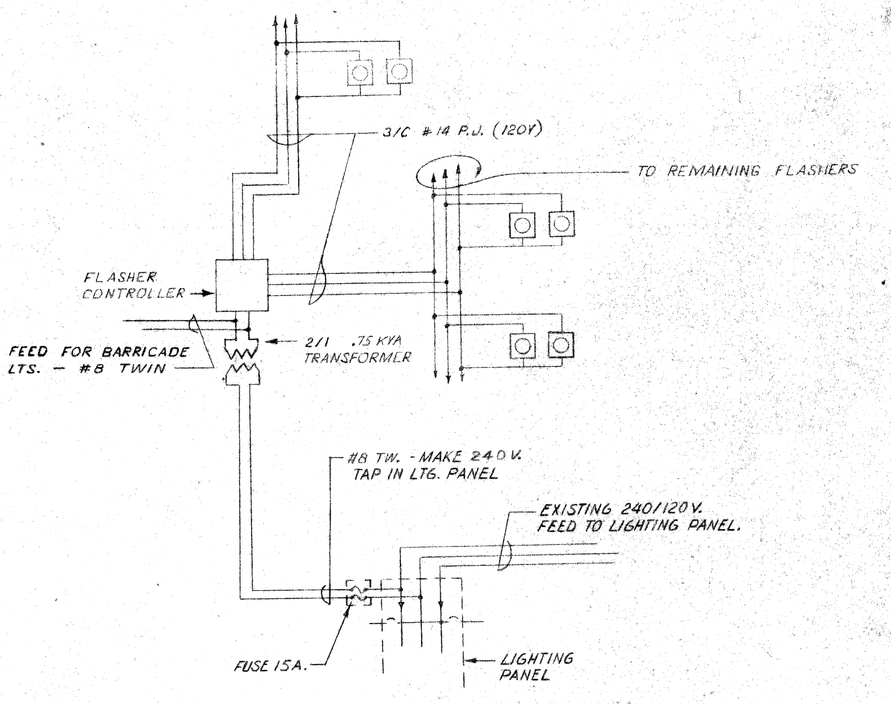

WIRING DIAGRAM - W.B. DETOUR FLASHER SIGNALS

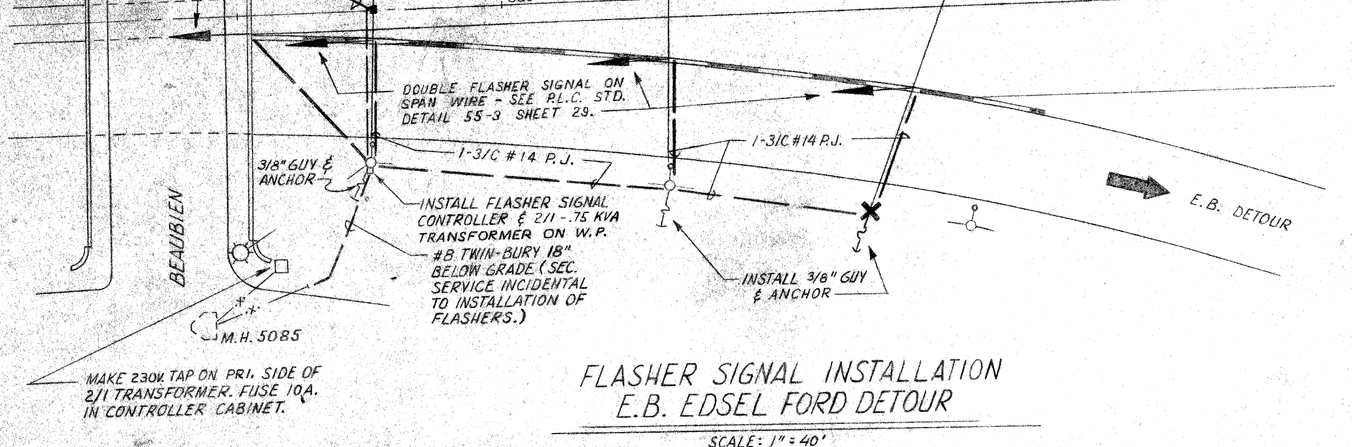

FLASHER SIGNAL INSTALLATION E.B. EDSEL FORD DETOUR

SCALE: 1" = 40'

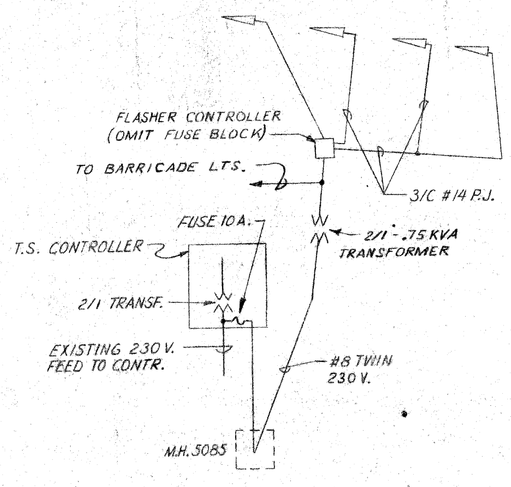

WIRING DIAGRAM
E.B. DETOUR FLASHER SIGNALS

LEGEND

PROPOSED DOUBLE FLASHER SIGNAL - INSTALL AS INDICATED.

35' CLASS 3 WOOD POLE & 3/8" GUY & ANCHOR.

EXISTING TRAFFIC SIGNAL CONTROLLER.

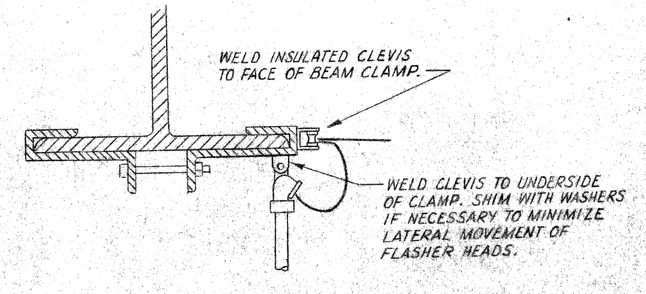

DETAIL OF FLASHER SIGNAL SUSPENDED FROM BRIDGE BEAM

N.T.S.

CITY OF DETROIT
PUBLIC LIGHTING COMMISSION

STAGE II OF FORD-CHRYSLER INTERCHANGE
DETOUR FLASHER SIGNALS

DRAWN BY	FILE NO.
D. W.	58-10
CHECKED BY	SHEET NO.
	8 OF 8
APPROVED BY	DATE
	4-1-61

MICHIGAN STATE HIGHWAY DEPARTMENT
WALTER P. CHRYSLER EXPRESSWAY

REVISIONS

NO.	DESCRIPTION	DATE	BY

SQUAD BOSS		
DRAWN BY		
TRACED BY		
CHECKED BY		

SHEET 67 OF

82251 F C16

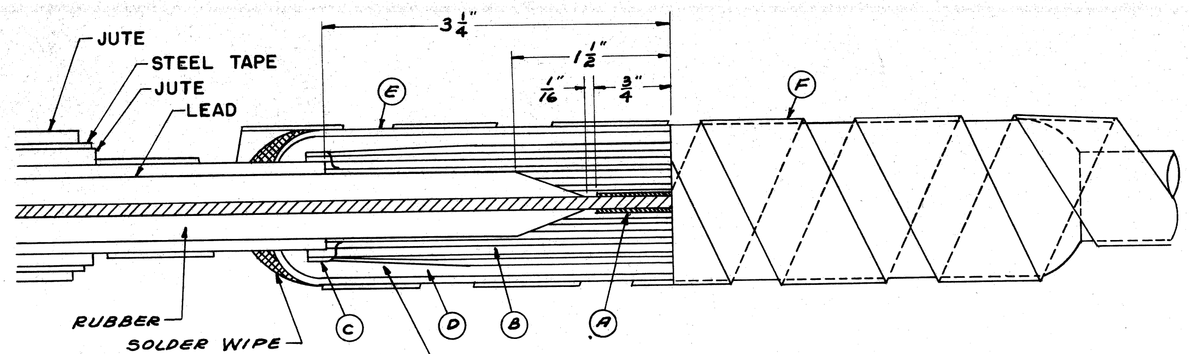

NOTE: VOID THIS JOINT NOT FILLED WITH COMPOUND.

(A) #8 COPPER SLEEVE 1½" LONG TIGHTLY CLOSED AND SWEATED.

(B) TAPE #1 TO BE BUILT TO A SIZE 50% GREATER THAN THE ORIGINAL INSULATION DIAMETER.

(C) TWO THICKNESSES TAPE #1 TO BE BROUGHT OVER LEAD-¼".

(D) ONE LAYER OF #2 TAPE.

(E) 1¼" x 8" x ⅛" WALL LEAD SLEEVE.

(F) STEEL TAPE TO BE PEELED FROM CABLE AND AFTER SPLICE IS COMPLETED, BOTH TAPES SHALL BE WRAPPED OVER SPLICE AND TIED WITH WIRE.

#8 PARKWAY CABLE JOINT (R.I.L.C. JOINT SIMILAR EXCEPT FOR JUTE AND ARMOR)

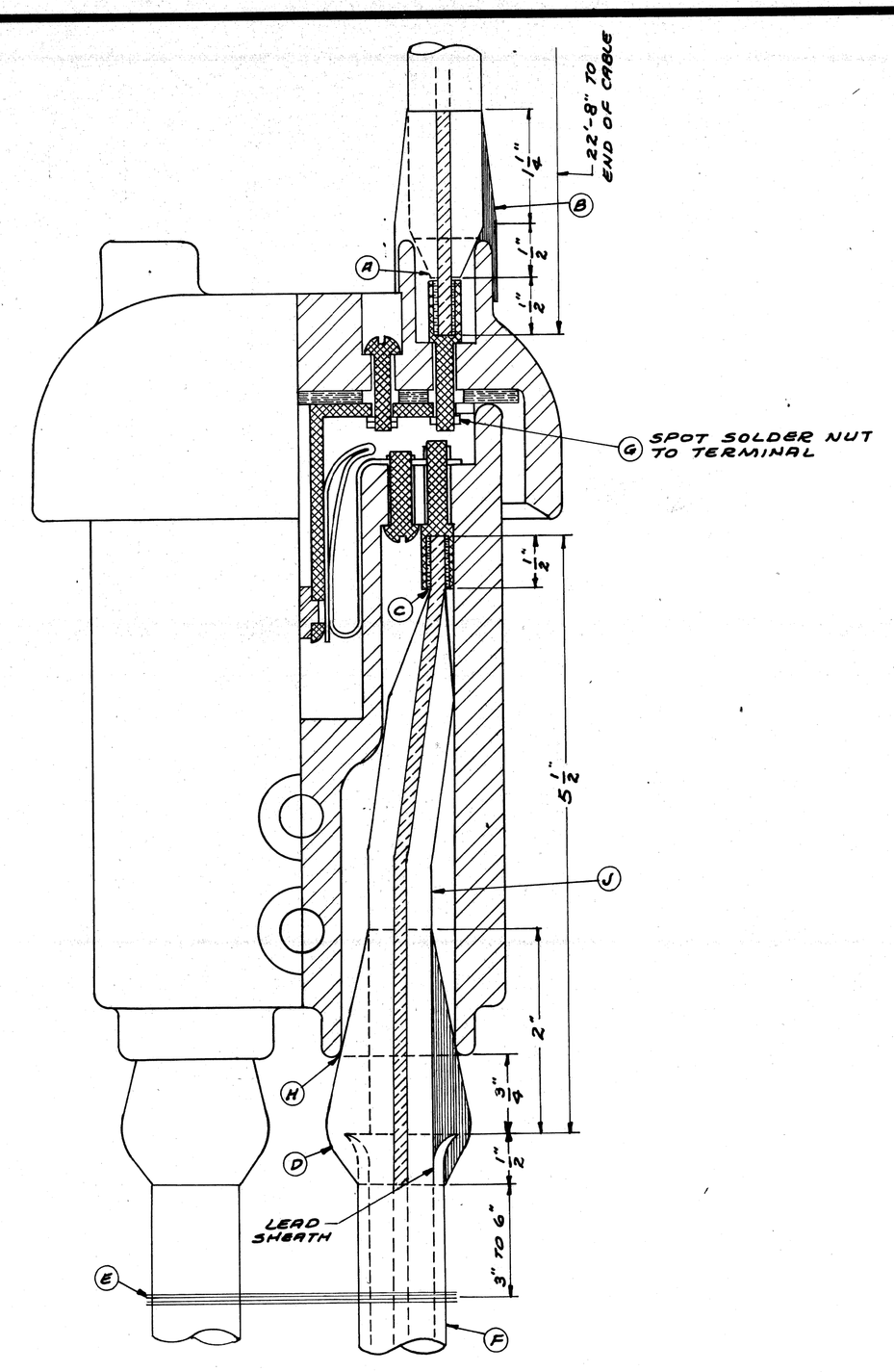

(A) SWEAT TERMINAL & PENCIL RUBBER INSULATION TO FIT SNUGLY IN PORCELAIN OPENING SO THAT AS NUT (G) IS DRAWN UP TIGHT THE OPENING IS COMPLETELY AND TIGHTLY FILLED.

(B) BUILD UP WITH TAPE #1 AS SHOWN AND COVER WITH 2 LAYERS OF ½" HALF LAP TAPE #2. THIS IS COVERED WITH ONE COAT OF BLACK INSULATING VARNISH, G.E. #457.

(C) SWEAT CONDUCTOR INTO TERMINAL & PENCIL RUBBER INSULATION 1" AS SHOWN.

(D) CUT LEAD SHEATH AND CHIP OFF WITH CHIPPING IRON, DON'T BREAK OFF BY BENDING. BELL THE LEAD SHEATH - THEN STRIP OFF THE BRAID AROUND THE RUBBER TO WITHIN ¾" OF LEAD SHEATH. FILL SHEATH CAVITY WITH BISHOP #55 B ADHESIVE. APPLY TAPE #1 TO FORM STRESS CONE OVER BELL AND HAVING ENOUGH TO FORM A TIGHT FIT BETWEEN CABLE AND PORCELAIN AT (H) COVER THE SPLICING GUM WITH 2 LAYERS OF TAPE #2 HALF LAP TO ABOUT ½" BEYOND TERMINAL END OF GUM AND PAINT WITH BLACK INSULATING VARNISH, G.E. #457.

(E) #18 SERVICE WIRE OR BRAID 4 WRAPS BETWEEN CABLES AND SWEATED TO LEAD SHEATH FOR BOND. TIE TO GROUND WIRE.

(F) FOR PARKWAY CABLE, JUTE AND STEEL TAPE STRIPPED OFF TO NEAR DUCT ENTRANCE.

(J) REMOVE WAX AND ANY FOREIGN MATTER FROM END OF BRAID TO TERMINAL BEFORE APPLYING ANY INSULATION.

#8 PARKWAY OR L.C.P.I. CABLE CONNECTIONS FOR SERIES CUTOUT

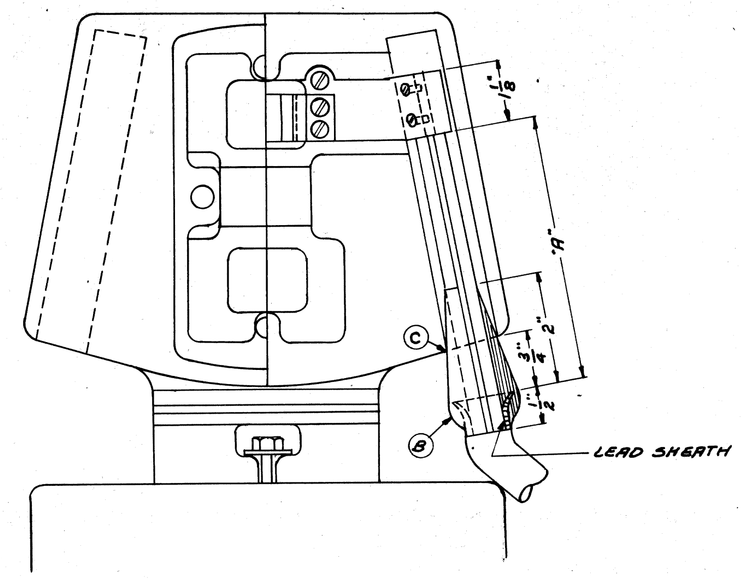

"A" THIS DISTANCE WILL VARY DEPENDING ON THE MAKE OF COIL USED.

(B) CUT LEAD SHEATH AND CHIP OFF WITH CHIPPING IRON. DON'T BREAK OFF BY BENDING. CUT OFF INSULATION FOR CONNECTION. BELL THE LEAD SHEATH THEN STRIP OFF THE BRAID AROUND THE RUBBER TO WITHIN ¾" OF LEAD SHEATH. APPLY OKOLITE RUBBER CEMENT IN BELL SHEATH. APPLY TAPE #1 TO FORM STRESS CONE OVER BELL AND HAVING ENOUGH TO FORM A TIGHT FIT BETWEEN CABLE AND PORCELAIN AT (C). COVER SPLICING GUM WITH DOUBLE LAYER OF ½" LAP TAPE #2 TO ABOUT ½" BEYOND TERMINAL END OF GUM AND PAINT WITH BLACK INSULATING VARNISH, G.E. #457. REMOVE WAX AND ANY FOREIGN MATTER FROM RUBBER INSULATION, FROM END OF BRAID TO TERMINAL BEFORE APPLYING ANY INSULATION.

CABLE CONNECTION TO COMBINATION SAFETY COIL AND SERIES CUTOUT

TAPE NOTE: (2) JOHNS-MANVILLE "DUTCH BRAND" ASTM RUBBER TAPE #1 TAPE #8, OR AN APPROVED EQUAL.
TAPE #2 - 3M SCOTCH BRAND #33 ELECTRICAL TAPE OR APPROVED EQUAL

COMPOUND NOTE:
COMPOUND A - MINERALLAC #78

CAULKING MATERIAL:
#1 SCOTCH CAST BRAND RESIN #4, EPOXY TYPE RESIN.

NOTES FOR 1/c 7500 V POTHEAD

1. CUT LEAD SHEATH AND CHIP OFF WITH CHIPPING IRON. DO NOT BREAK OFF BY BENDING. SLIP THE LEAD CUP OVER THE CABLE. BELL THE LEAD SHEATH, THEN STRIP OFF THE BRAID AROUND THE RUBBER TO WITHIN ¾" OF THE LEAD SHEATH. REMOVE WAX AND FOREIGN MATTER FROM RUBBER INSULATION.
2. SWEAT CONDUCTOR INTO TERMINAL (D) AND PENCIL RUBBER INSULATION 1" AS SHOWN.
3. FIRMLY MOUNT THE TERMINAL (D) IN THE PORCELAIN HOUSING INVERT THE POTHEAD AND FILL WITH COMPOUND "A" OR EQUAL.
4. AFTER THE COMPOUND HAS COOLED BUT WHILE STILL TACKY SLIP THE LEAD DISCS INTO PLACE AND SWEAT TO CABLE SHEATH AT (N)
5. TRAIN THE CABLE AND MOUNT THE POTHEAD ON CROSS-ARM.
6. SLIP THE CONE SHAPED RUBBER BUSHING (B) OVER THE CONDUCTOR.
7. SWEAT THE CONDUCTOR IN TERMINAL (E) & PENCIL THE RUBBER INSULATION AS SHOWN.
8. MOUNT THE TERMINAL FIRMLY IN THE CAP (B) & FILL TO UNDERSIDE OF RUBBER BUSHING WITH COMPOUND "A" OR EQUAL. (#8 WIRE ONLY)
9. BUILD UP WITH TAPE #1 AND CARRY TWO LAYERS OVER THE END OF THE CAP TO POINT (F) AS SHOWN AND COVER WITH 2 LAYERS OF HALF LAP TAPE #2 AND PAINT WITH G.E. #457 BLACK INSULATING VARNISH.

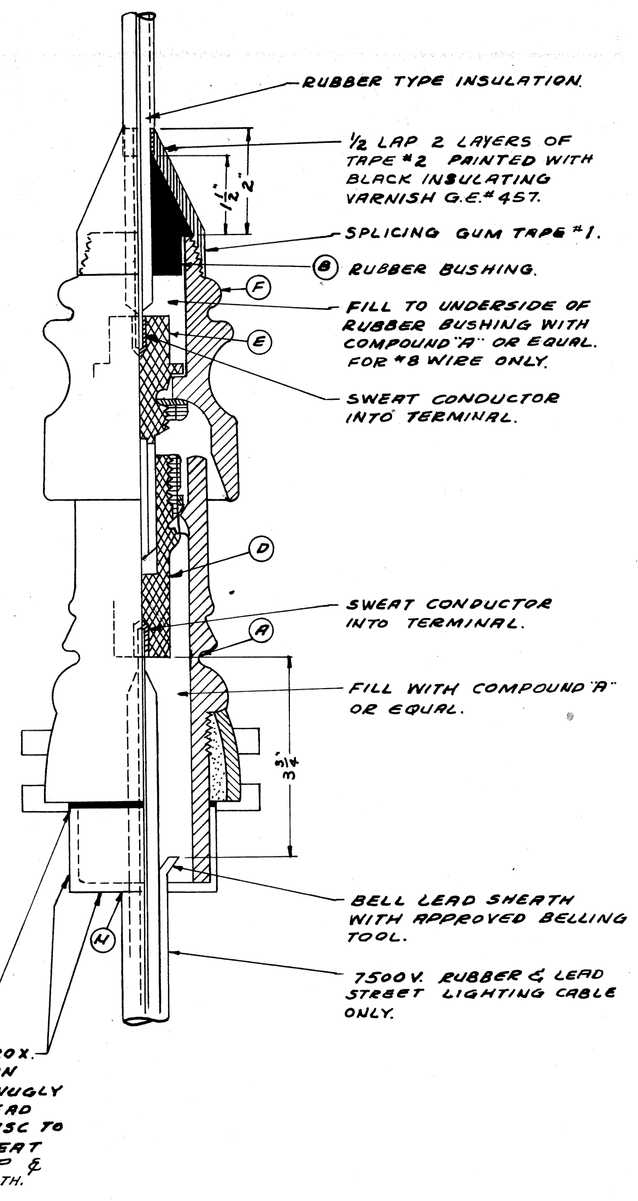

1/c 7500 V. POTHEAD

REDRAWN 9-9-60

CITY OF DETROIT
PUBLIC LIGHTING COMMISSION
P.L.C. DETAILS - CABLE SPLICES & CONNECTIONS

DRAWN BY	FILE NO.
R.K.J.	55-3H
CHECKED BY	SHEET NO.
	1
APPROVED BY	DATE
	1-31-52

MICHIGAN STATE HIGHWAY DEPARTMENT

REVISIONS

NO.	DESCRIPTION	DATE	BY
(2)	CHANGED TO JOHNS-MANVILLE TAPE	3-31-61	M.J.C.

SQUAD BOSS	
DRAWN BY	
TRACED BY	
CHECKED BY	

SHEET 68 OF

82251 F C16

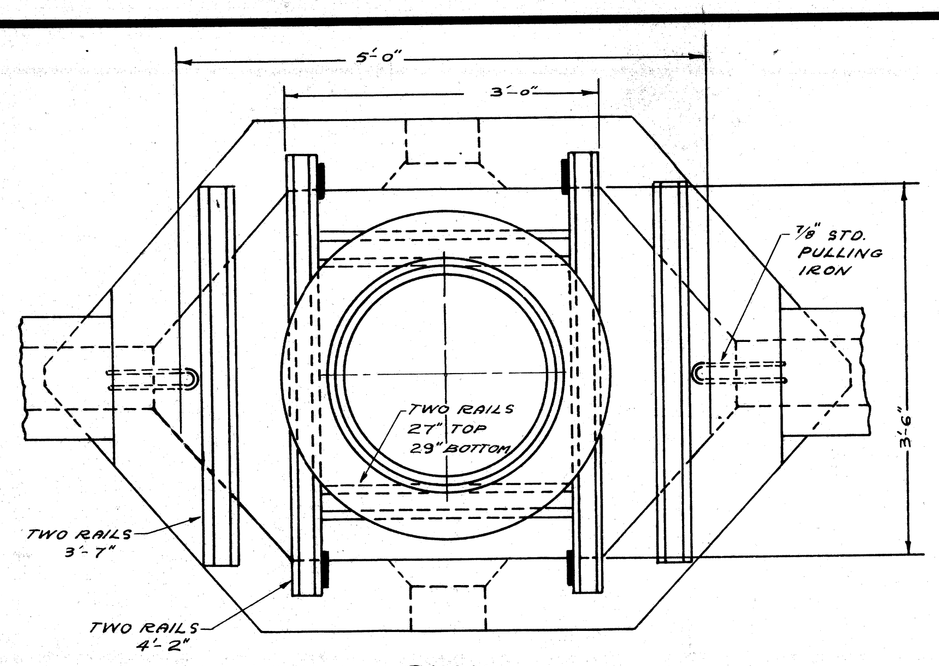

PLAN

TYPE "S" HANDHOLE

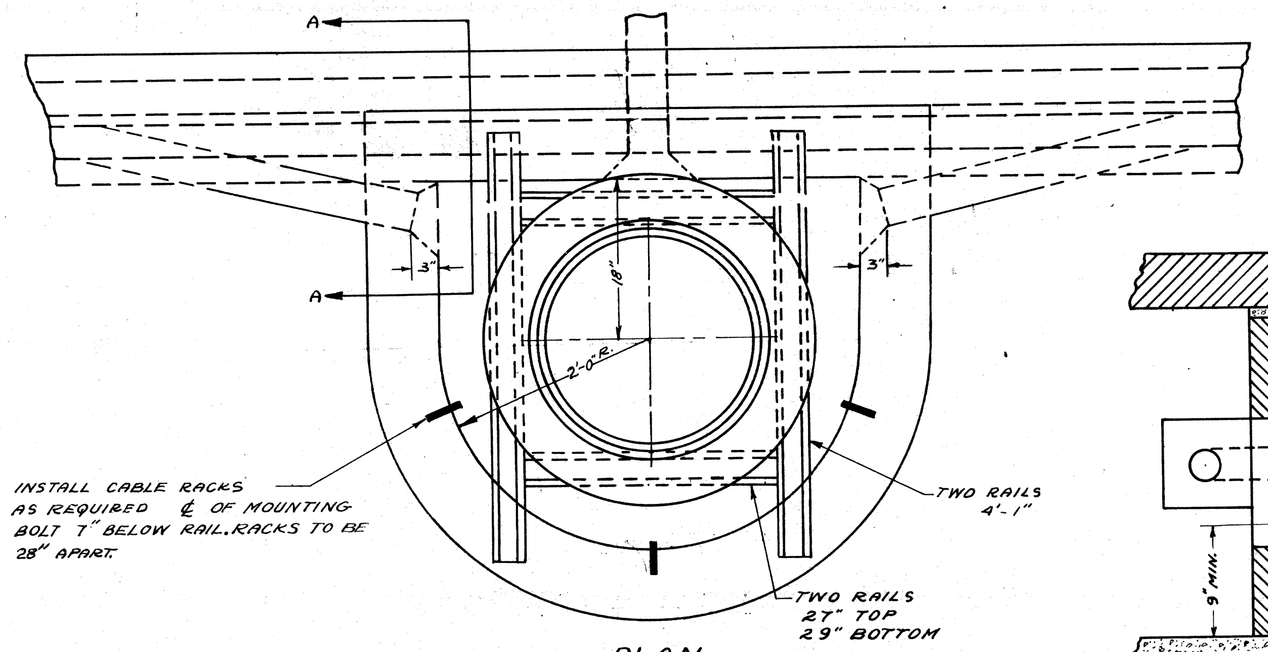

PLAN

TYPE "D" HANDHOLE

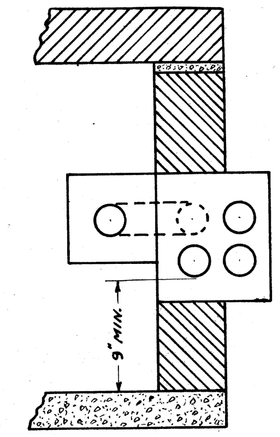

SECTION A-A

NOTES:

1. DUCT ENTRANCE TO BE BUILT AS REQUIRED
2. ALL RAILS TO BE 60 #/Y D OR HEAVIER
3. CABLE PULLING IRONS TO BE GALVANIZED
4. CABLE RACKS AND ARMS TO BE GALVANIZED
5. IN PAVEMENT PROVIDE AT LEAST 3" BETWEEN ROOF AND BASE OF PAVEMENT. WHERE EXISTING GRADE IS HIGHER THAN PROP. FUTURE GRADE, INSTALL BRICK RING OR GROUT (AS REQ'D) UNDER FRAME TO ALLOW FOR FUTURE FRAME ADJUSTMENT.

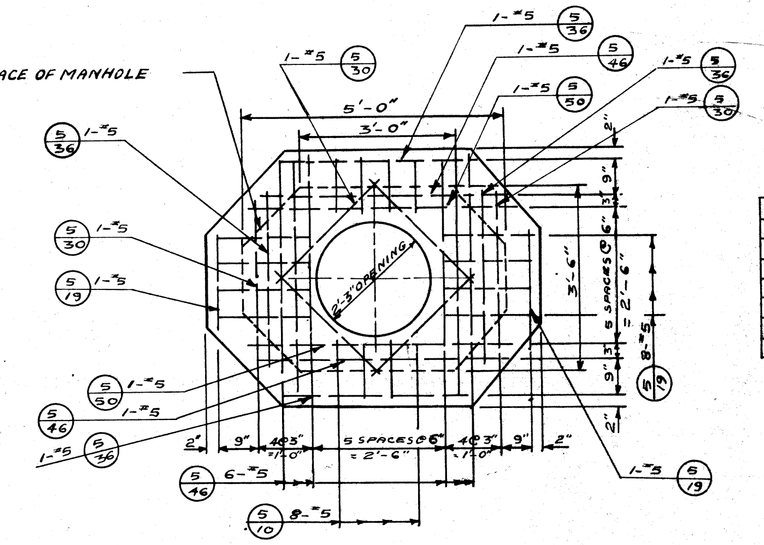

TABLE FOR "5 BARS		
MARK	NO.	LENGTH
5-50	2	5'-0"
5-46	8	4'-6"
5-36	4	3'-6"
5-30	6	3'-0"
5-19	10	1'-9"
5-10	8	1'-0"

PLAN

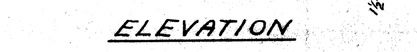

ELEVATION

ALTERNATE ROOF TYPE "S" HANDHOLE

MSHD GRADE A(6B) CONCRETE

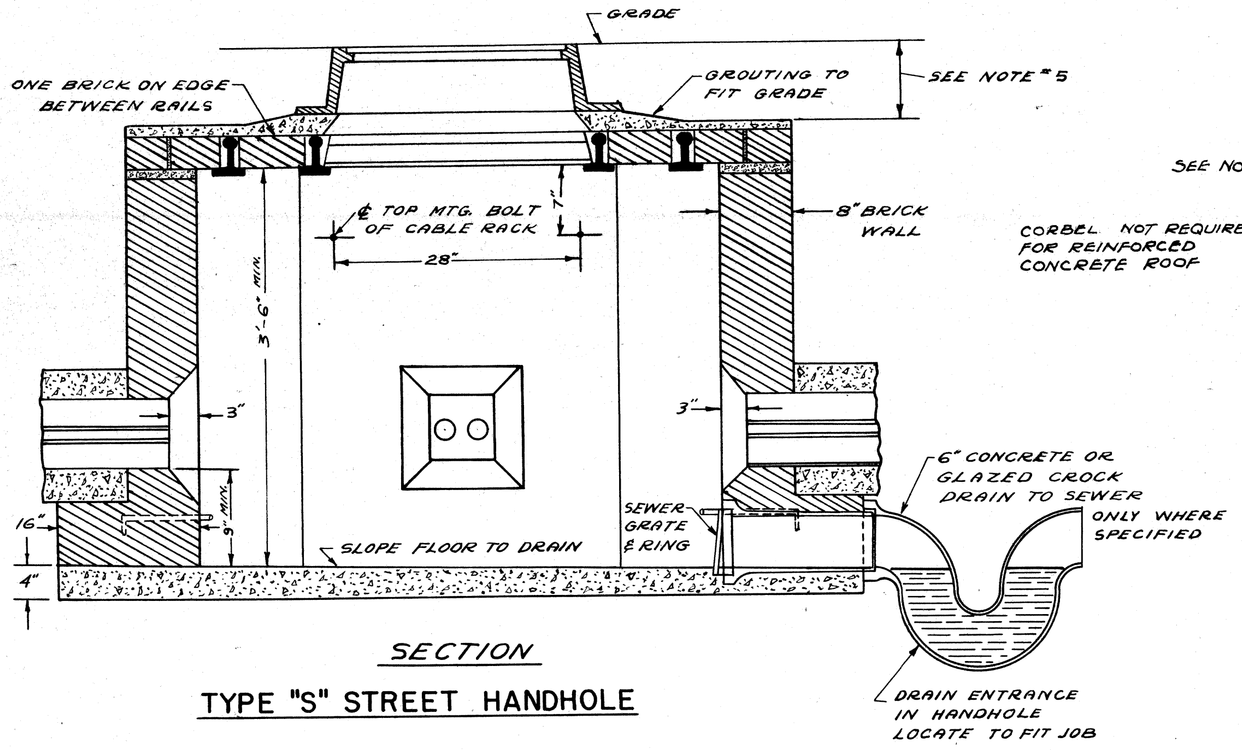

SECTION

TYPE "S" STREET HANDHOLE

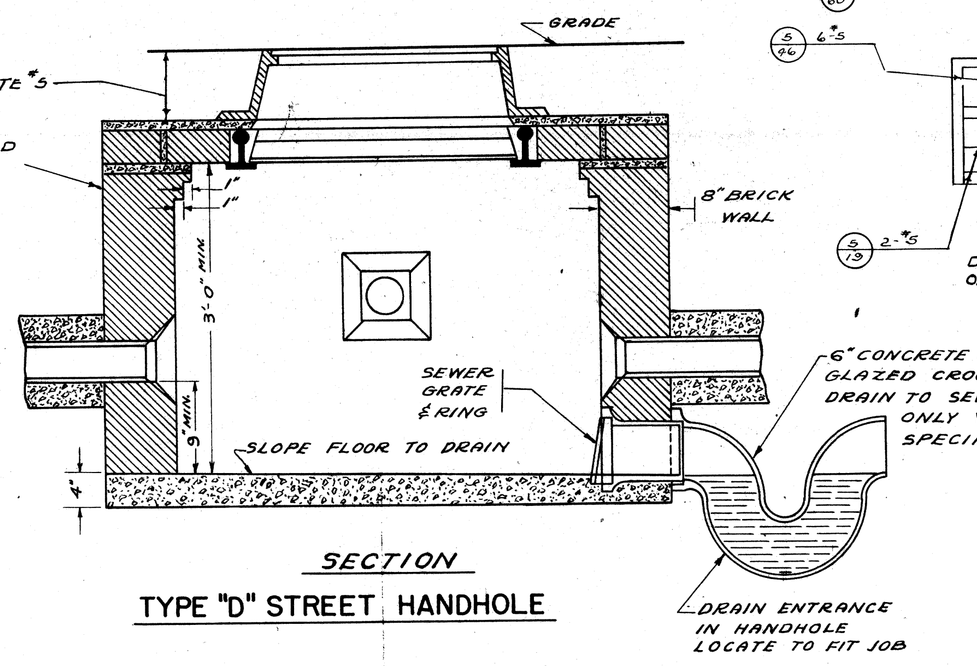

SECTION

TYPE "D" STREET HANDHOLE

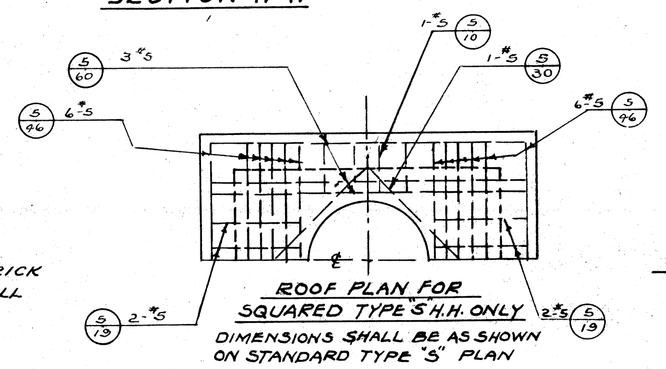

ROOF PLAN FOR SQUARED TYPE 'S' H.H. ONLY

DIMENSIONS SHALL BE AS SHOWN ON STANDARD TYPE "S" PLAN

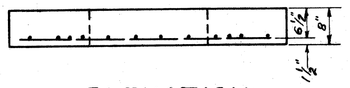

ELEVATION

ALTERNATE ROOF TYPE "D" HANDHOLE

MSHD GRADE A(6B) CONCRETE

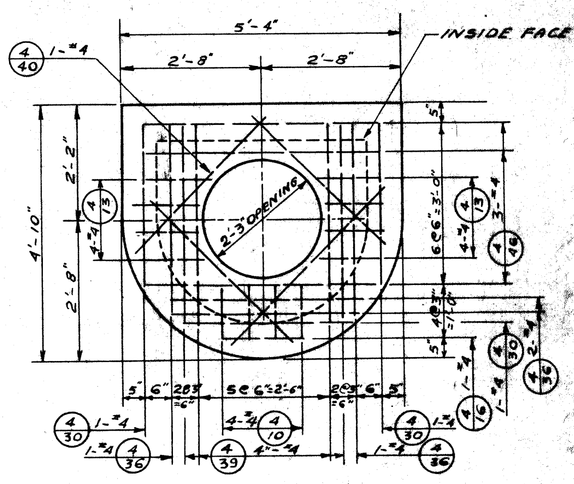

TABLE FOR "4 BARS		
MARK	NO	LENGTH
4-46	3	4'-6"
4-40	9	4'-0"
4-39	1	3'-9"
4-36	1	3'-6"
4-30	3	3'-0"
4-16	1	1'-6"
4-13	8	1'-3"
4-10	4	1'-0"

PLAN

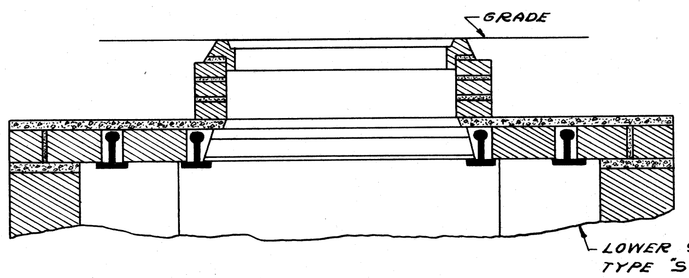

SECTION

TYPE "S" SIDEWALK HANDHOLE

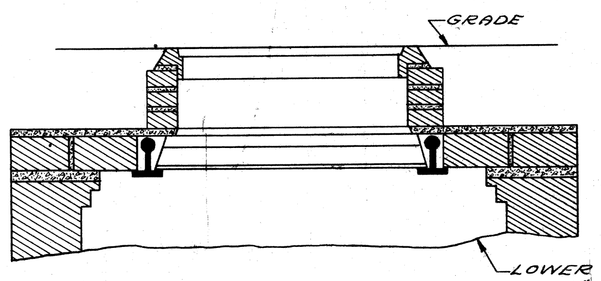

SECTION

TYPE "D" SIDEWALK HANDHOLE

NOTE:

BAR NUMBERS DENOTE THE SIZE OF BAR REQUIRED IN ACCORDANCE WITH CURRENT USAGE SPECIFIED BY THE CONCRETE REINFORCING STEEL INSTITUTE.

NOTE:

EXCAVATION LIMITS FOR PUBLIC LIGHTING COMMISSION HANDHOLES SHALL BE ON VERTICAL PLANES ON THE FOOTING OUTLINE.

SCALE: 1"=1'-0"
½"=1'-0"

NO.	DESCRIPTION	DATE	BY
	SQUARED TYPE 'S' H.H. ADDED	4-28-57	W.K.F.
5	EXCAVATION LIMITS NOTE ADDED	6-30-54	J.C.P.
	CK'D 4-22-55 QP REVISIONS REDRAWN 4-20-55		
1	ALTERNATE ROOFS ADDED		
2	ADDED SECTION A-A TO TYPE "D" HANDHOLE	4-2-52	M.J.C.
3	CORBELLING ADDED TO H.H. WALL	6-4-52	M.J.C.
4	CHANGE NOTE #5	9-31-74	J.C.P.

CITY OF DETROIT
PUBLIC LIGHTING COMMISSION

P.L.C. DETAILS — HANDHOLES

DRAWN BY	FILE NO.
R.G.P.	55-3E
CHECKED BY	SHEET NO.
OMB	2
APPROVED BY	DATE
Merc	2-11-52

MICHIGAN STATE HIGHWAY DEPARTMENT

APPROVED _____ CHIEF BRIDGE DRAFTSMAN

APPROVED _____ ENGINEER OF BRIDGE DESIGN

APPROVED _____ BRIDGE ENGINEER

ROAD DOSS	
DRAWN BY	
TRACED BY	
CHECKED BY	

SHEET 69 OF

82251 F C16

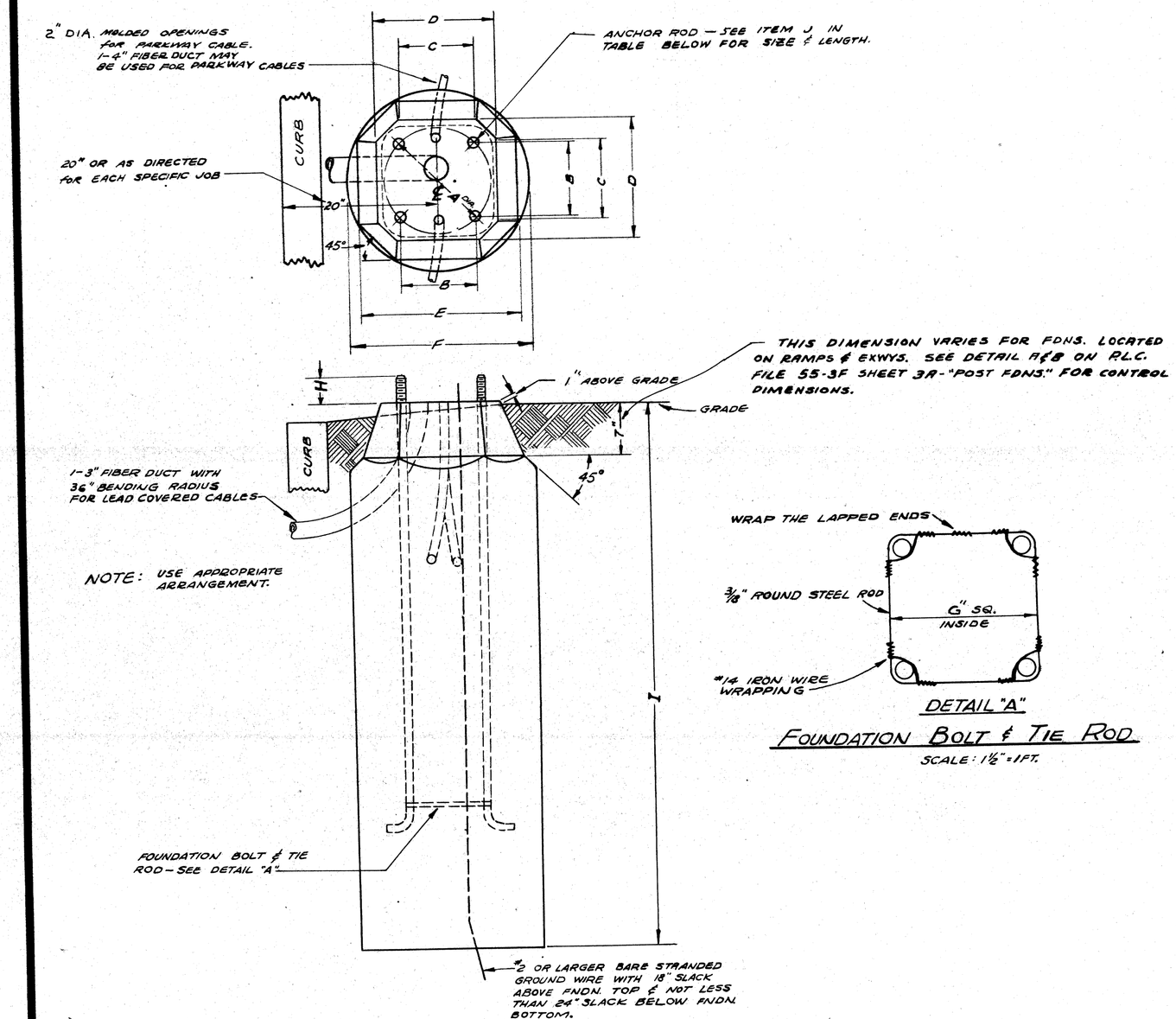

TYPICAL LAMP POST FOUNDATION

SCALE: 1"=1FT.

DETAIL "A"

FOUNDATION BOLT & TIE ROD

SCALE: 1½"=1FT.

	A	B	C	D	E	F	G	H	I	J	PLC. CODE NO'S.
INCANDESCENT COMB. TRANSF. BASE, 30 FT. MTG. HT. & 6 FT. BRACKET ARM											693Y7
MERCURY VAPOR LAMP ANCHOR BASE, 30 FT. MTG. HT. & 6 FT. BRACKET ARM — FOR SERVICE ROADS.	11"	7 3/4"	9 1/2"	13 1/4"	21 1/4"	26"	8 3/4"	2 11/16"	60"	1"X 40"	401A 1H 300 B2B
MERCURY VAPOR COMB. STD., 30 FT. MTG. HT. & 6 FT. BRACKET ARM — FOR SERVICE ROADS. ANCHOR BASE	15"	10 5/8"	12 1/8"	17 5/8"	21 3/8"	26"	12 3/8"	3 5/8"	72"	1 3/4 X 60"	401A 27M 300 B2B
MERCURY VAPOR ANCHOR BASE, 30 FT. MTG. HT. & 15 FT. BRACKET ARM — FOR EXPRESSWAY.	11"	7 3/4"	9 1/2"	13 1/2"	21 1/4"	26"	8 3/4"	2 11/16"	72"	1"X 60"	1407-Y1 1407-Y2-7H250 F2
FLUORESCENT ANCHOR BASE, 30 FT. MTG. HT. & 8 FT. BRACKET ARM (RAMPS & EXPWY.)	11"	7 3/4"	9 1/2"	13 1/2"	21 1/8"	26"	8 3/4"	2 5/8"	72"	1 1/4" X 48"	801A-7H300 C2E 801A-7H300 CC2E
MERCURY VAPOR TRANSF. BASE 30FT. MTG. HT. (NOMINAL) 6 FT. BRACKET ARM FOR SERVICE RDS.	15"	10 5/8"	13 3/16"	18"	20 3/8"	26"	12 3/8"	3"	60"	1"X 40"	403A-H 286B2B

CITY OF DETROIT

PUBLIC LIGHTING COMMISSION

P.L.C. DETAILS — POST FOUNDATIONS

DRAWN BY	FILE NO.
L.W.M.	55-3
CHECKED BY	SHEET NO.
G.K.	3 B
APPROVED BY	DATE
L.L.-Mem.	10-12-59

MICHIGAN STATE HIGHWAY DEPARTMENT

APPROVED BY P.L.C.

P.L.C. U.G. DEPT. H.L.K.

REVISIONS

NO.	DESCRIPTION	DATE	BY
1	ADDED P.L.C. CODE NO'S.	3-29-61	LWM

SQUAD BOSS	
DRAWN BY	
TRACED BY	
CHECKED BY	

SHEET 70 OF

82251 F C16

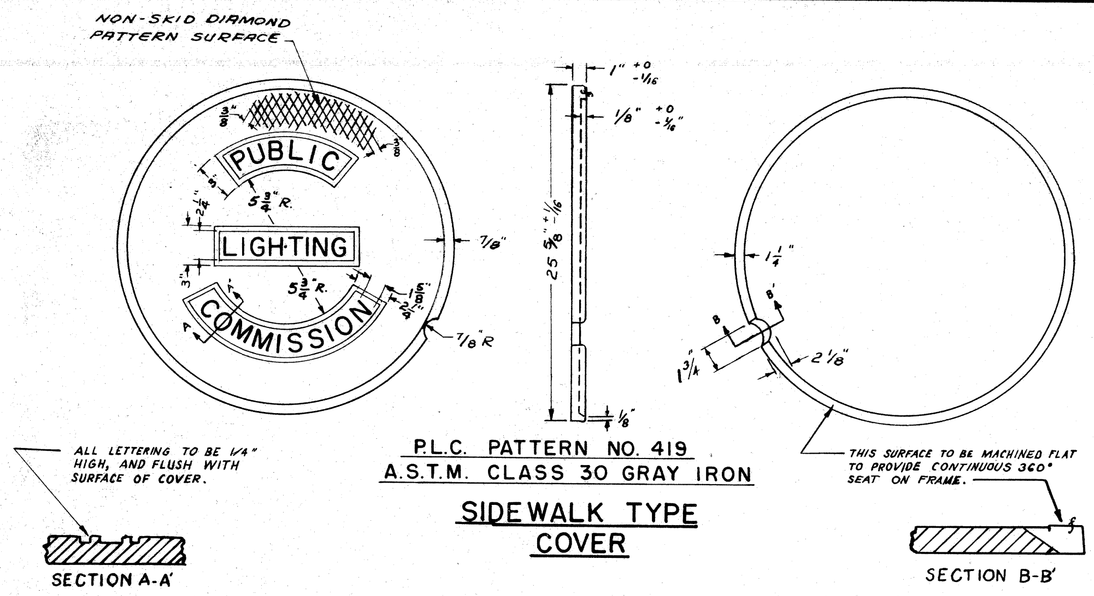

P.L.C. PATTERN NO. 419
A.S.T.M. CLASS 30 GRAY IRON

SIDEWALK TYPE COVER

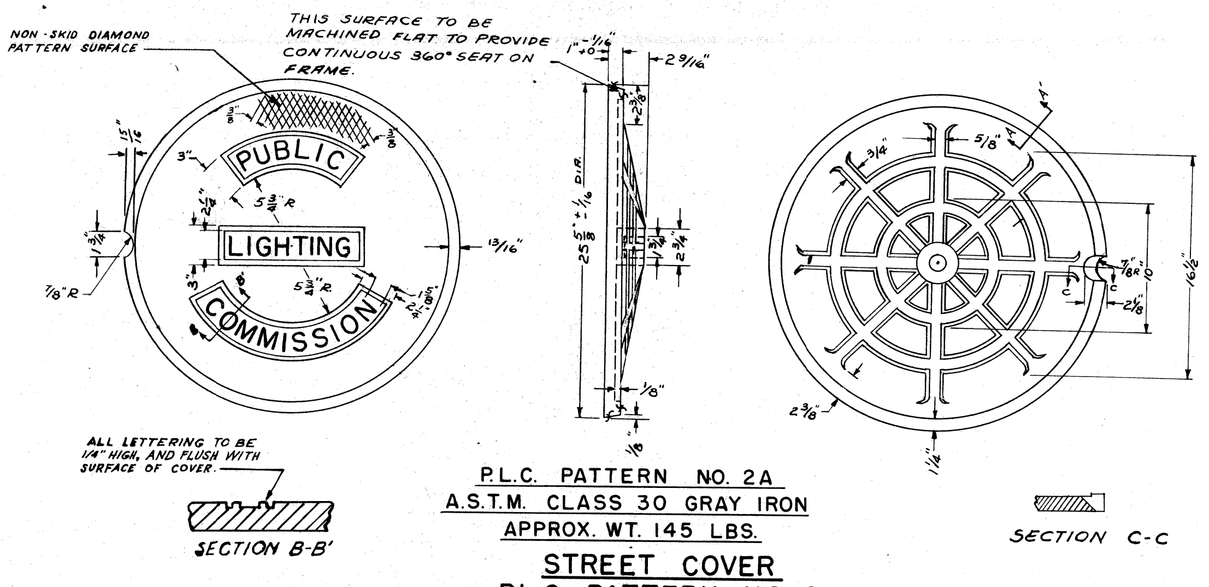

P.L.C. PATTERN NO. 2A
A.S.T.M. CLASS 30 GRAY IRON
APPROX. WT. 145 LBS.

STREET COVER P.L.C. PATTERN NO. 2A

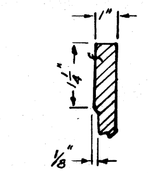

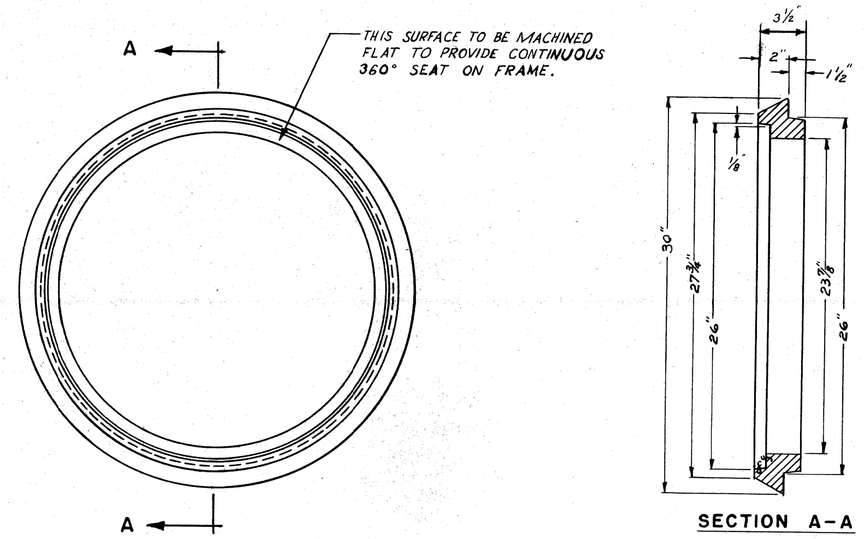

P.L.C. PATTERN NO. 420
A.S.T.M. CLASS 20 OR 30 GRAY IRON
APPROX. WT. 122 LBS. ⑤

SIDEWALK TYPE FRAME

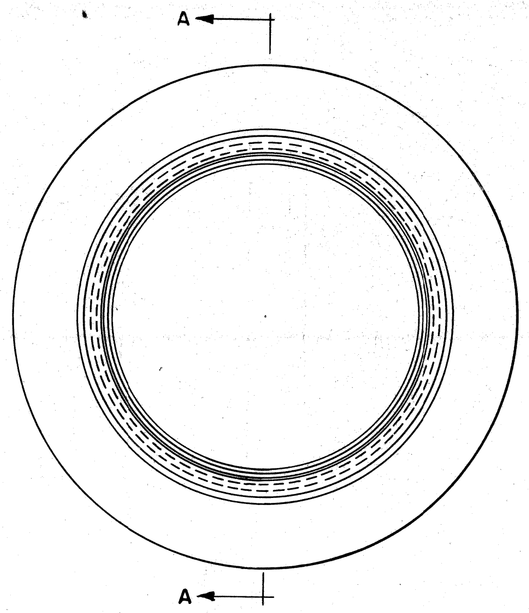

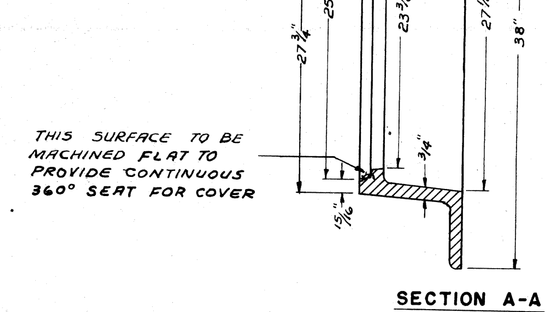

P.L.C. PATTERN NO. 1A
A.S.T.M. CLASS 20 OR 30 GRAY IRON
APPROX. WT. 231 LBS. ⑤

STREET TYPE FRAME

ALL FILLETS ARE 1/2" RADIUS & ALL ROUNDS ARE 1/4" RADIUS

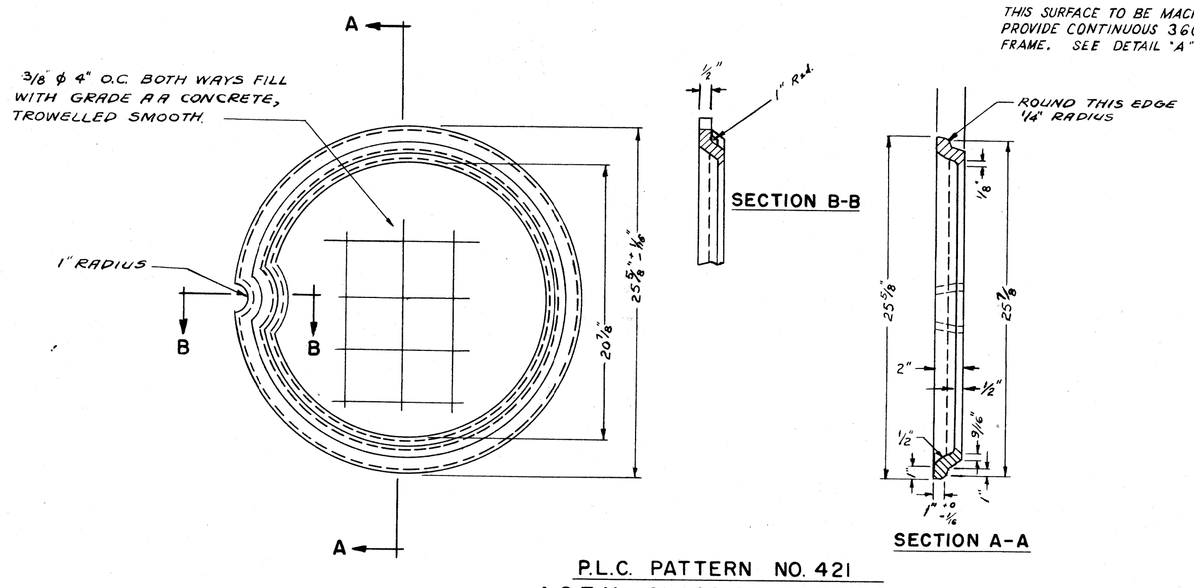

P.L.C. PATTERN NO. 421
A.S.T.M. CLASS 30 GRAY IRON
APPROX. WT. 44 LBS.

SIDEWALK TYPE CONCRETE FILLED COVER

NOTE:

FRAMES MAY BE A.S.T.M. CLASS 30 GRAY IRON IF THE CONTRACTOR SO ELECTS.

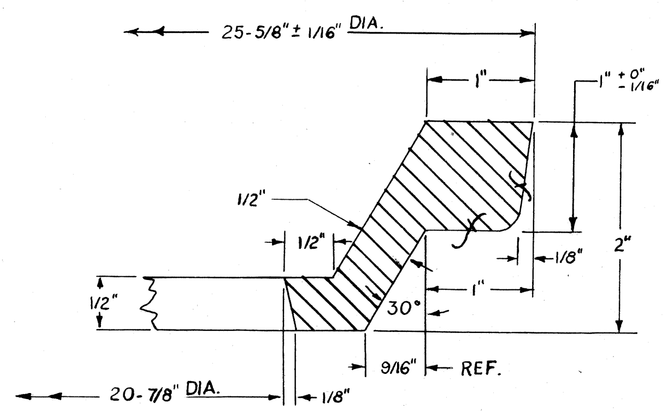

DETAIL "A"
(FULL SCALE)

APPROVED BY:

NO.	DESCRIPTION	DATE	BY
6	DIMENSIONAL CHANGES	6-6-61	DE
5	ADDED CLASS 30	6-1-61	MJC.
4	CHANGED DIM. ON ST. COVER	4-21-55	R.R.P.
3	FILLET NOTE ADDED	11-4-53	J.C.F.
2	CHANGE ST. FRAME PATTERN FROM #1 TO NO. 1A & THE DIMENSIONS	11-4-53	J.C.F.
1	MACHINE NOTES ADDED	4-29-53	R.F.P.

REVISIONS REDRAWN 4-18-55 2-4-52 R.K.J.

CITY OF DETROIT
PUBLIC LIGHTING COMMISSION
P.L.C. DETAILS – HANDHOLES FRAMES & COVERS

DRAWN BY	FILE NO.
R.G.P.	55-3D
CHECKED BY	SHEET NO.
G.Y. J.C.F.	9
APPROVED BY	DATE
	2-5-52

MICHIGAN STATE HIGHWAY DEPARTMENT

SQUAD BOSS			
DRAWN BY			
TRACED BY			
CHECKED BY			

SHEET 71 OF

82251 F C16

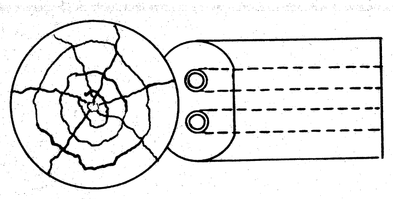

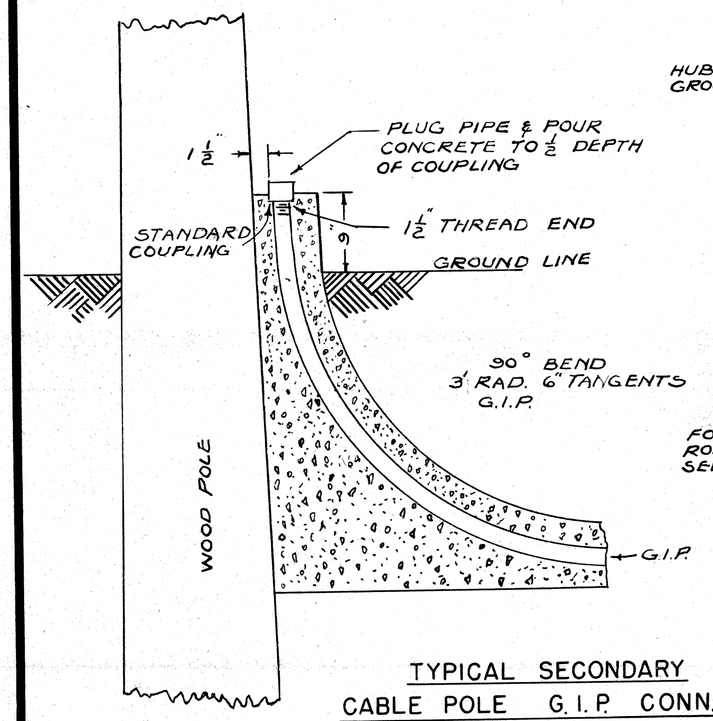

TYPICAL SECONDARY CABLE POLE G.I.P. CONN.

SCALE 1" = 1'-0"

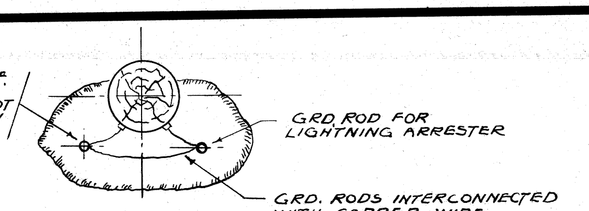

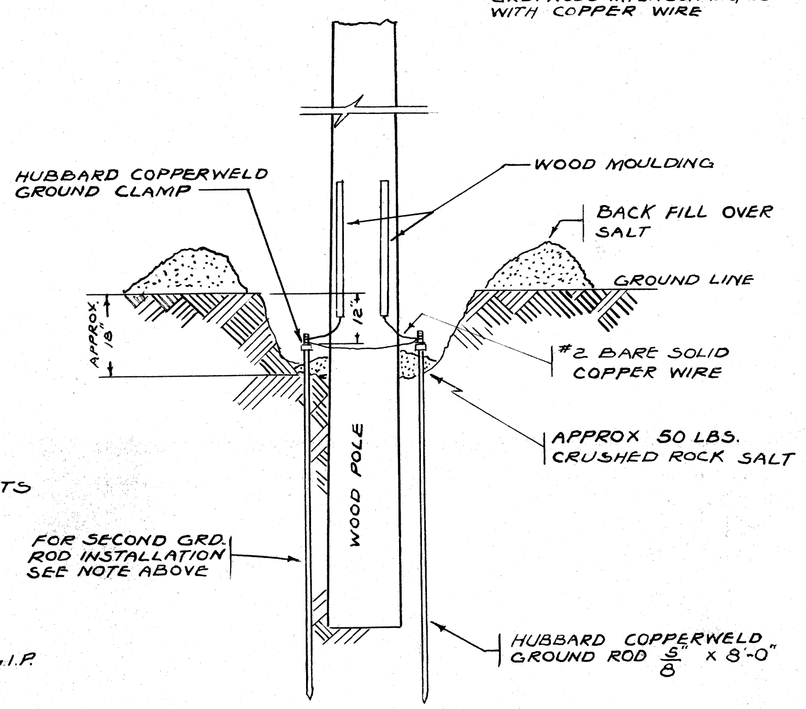

GROUND ROD INSTALLATION

SCALE ½" = 1'-0"

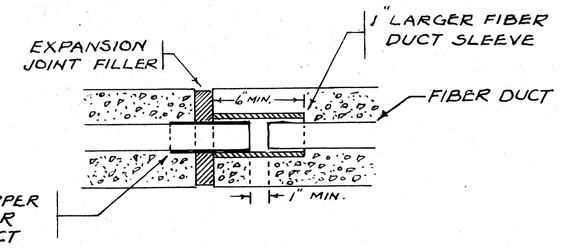

DETAIL OF EXPANSION JOINT ON BRIDGE

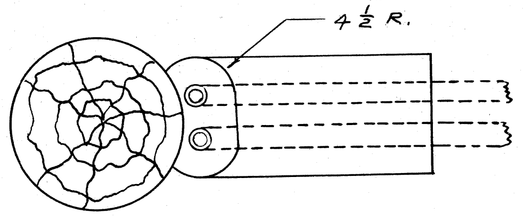

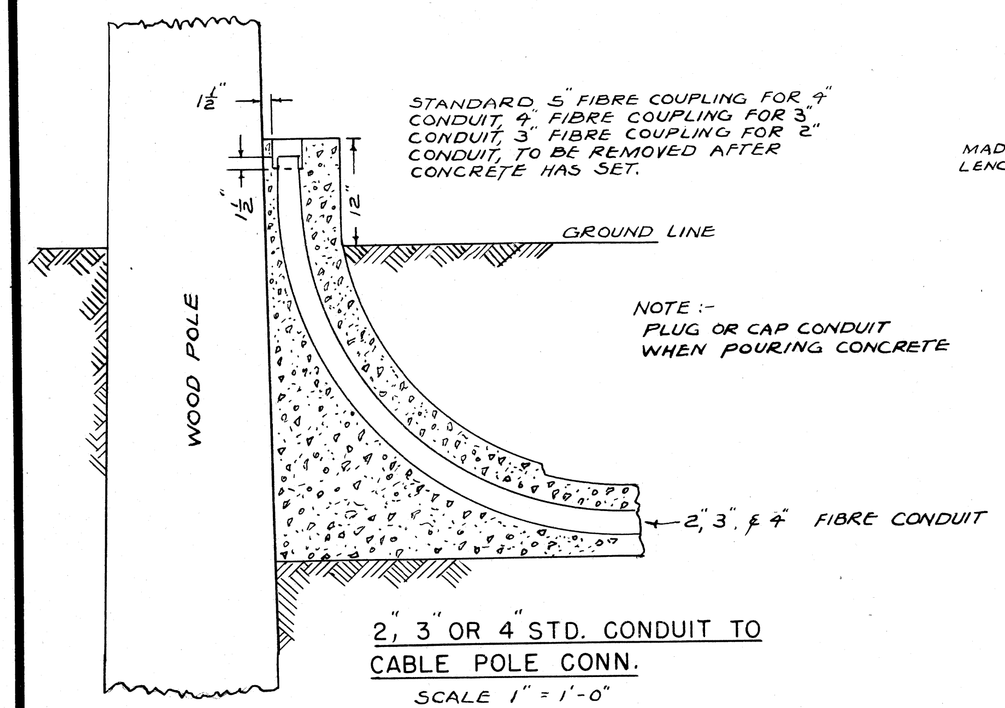

2", 3" OR 4" STD. CONDUIT TO CABLE POLE CONN.

SCALE 1" = 1'-0"

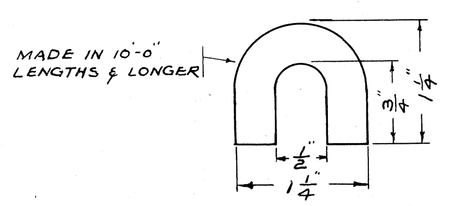

CYPRESS MOULDING

FULL SCALE

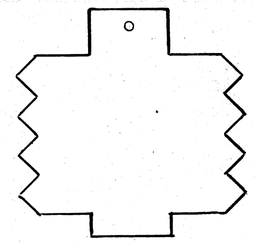

24000 VOLT TRUNK LINE

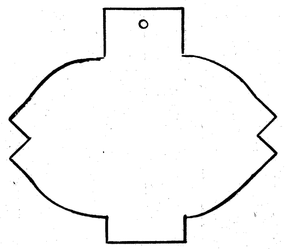

24000 VOLT FEEDER

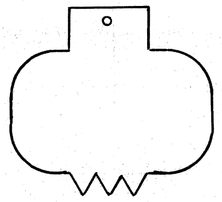

7200 VOLT FEEDER

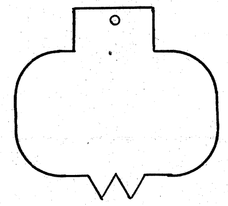

4800 VOLT & 5500 VOLT FEEDER

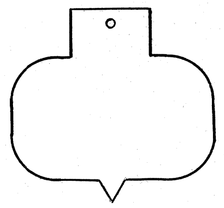

2400 VOLT FEEDER

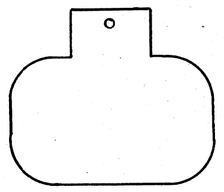

MISCELLANEOUS

SUBSTATION NAMES ON IDENTIFICATION TAGS SHALL BE SPELLED AS FOLLOWS

ATWTR.	
BI	TRNTY
BUTZL	TRBLY
CNFLD	TURNR
CONNR	VERNR
CUSTER	WALTN
GRNFD	WARRN
HUDSN	WD. TER.
J. CAMP	
JOY RD.	
LA. BEL	
LTHRP	
LUDDN	
MAPLE	
MCRDY	
MTRSE	
PAL. PK.	
PHILP	
PORTER	
STNTN	
STONE	

MULTIPLE INC. LTG.

MULTIPLE FLUORESCENT LIGHTING

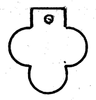

SECONDARY POWER SAFETY ISLANDS & TRAFFIC SIGNALS

TRAFFIC SIGNALS

TRAFFIC SIGNAL CHRONOLIZER

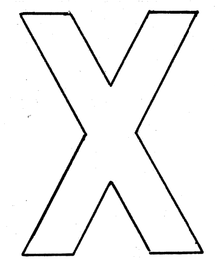

O.H. LINE PHASE TAG

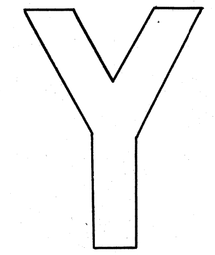

O.H. LINE PHASE TAG

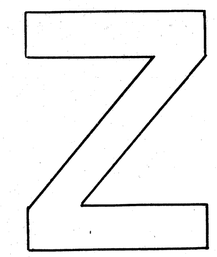

O.H. LINE PHASE TAG

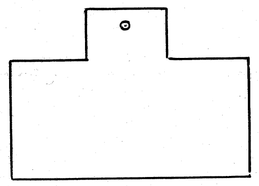

SUPERVISORY CONTROL

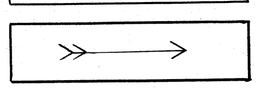

CIRCUIT DIRECTION

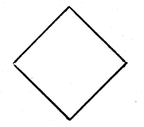

ST. LTG. COND. NO. (FROM 8/C CABLE)

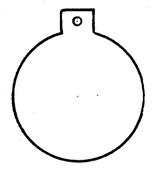

ST. LTG CIRC. NUMBER

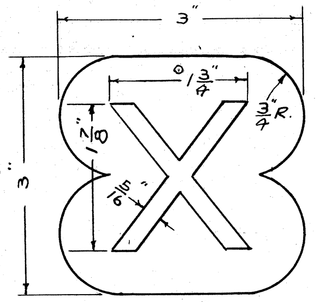

O.H. LINE OR POTHEAD PHASE TAG.

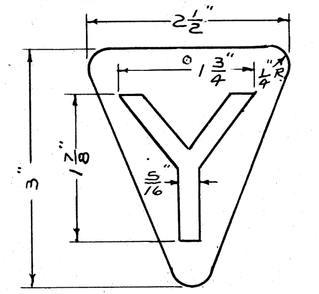

O.H. LINE OR POTHEAD PHASE TAG

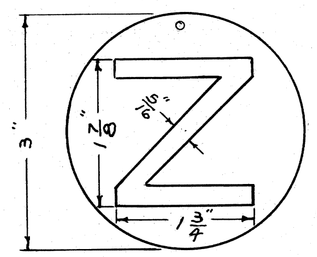

O.H. LINE OR POTHEAD PHASE TAG

NOTE

OVERHEAD LINE OR POTHEAD PHASE MARKERS MATERIAL LEAD .093" THICK RAISED LETTERS .093" THICK

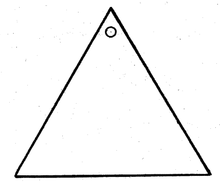

DEAD CABLE

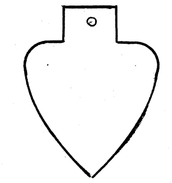

8 COND. CABLE

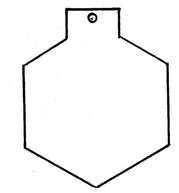

MULTIPLE LTG. CONTROL

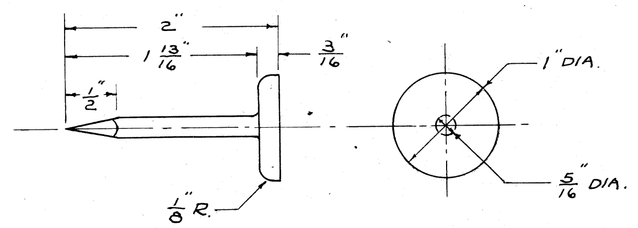

IDENTIFICATION TAGS

MATERIAL LEAD

SCALE ¾ = 1"

CAST BRONZE POLE MARKER ① FOR ALL WOOD POLES

TYPICAL MARKING

C 45
60

C 45 — PLC 45' POLE

60 — SET IN 1960

USE ¼" STEEL STAMP FOR LETTERING PIN

SET MARKER 7'-0" ABOVE GRADE

FACE OF HEAD TO BE ROUGH-GROUND. P.L.C. PATTERN PROVIDES FOR 40 MARKERS PER POURING

NOTE

CABLE TAG MARKINGS SUCH AS SUBSTATION OR CABLE MARKINGS WILL BE AS SHOWN ON PLANS OR WILL BE FURNISHED BY P. L. C.

REDRAWN 2-16-59

CITY OF DETROIT
PUBLIC LIGHTING COMMISSION
P.L.C. DETAILS
CABLE POLE & CABLE MARKING TAGS

DRAWN BY	FILE NO.
M.J.C.	55-3
CHECKED BY	SHEET. NO.
W.G.	10
APPROVED BY	DATE
G.L. Mann	2-11-52

MICHIGAN STATE HIGHWAY DEPARTMENT

REVISIONS			
NO.	DESCRIPTION	DATE	BY
①	ADDED CAST BRONZE POLE MARKER	3-8-60	M.J.C.

SQUAD BOSS		
DRAWN BY		
TRACED BY		
CHECKED BY		

SHEET 72 OF

82251 F C16

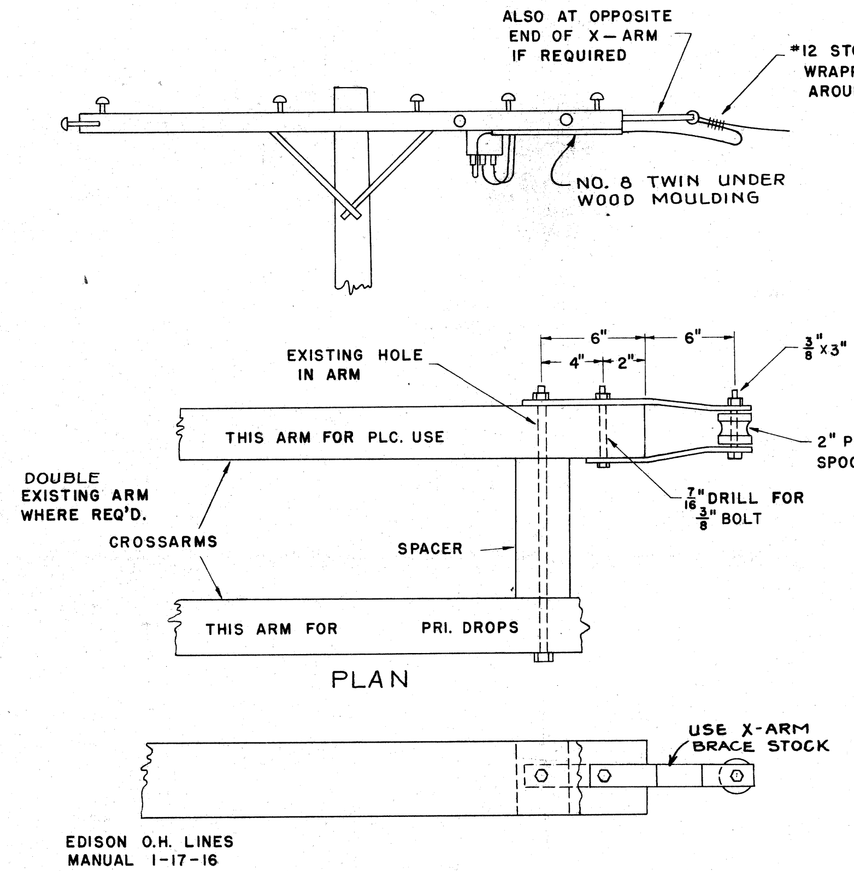

END OF ARM CONSTRUCTION FOR STREET LIGHTING DROP AT TRANSFORMER OR CABLE POLES.

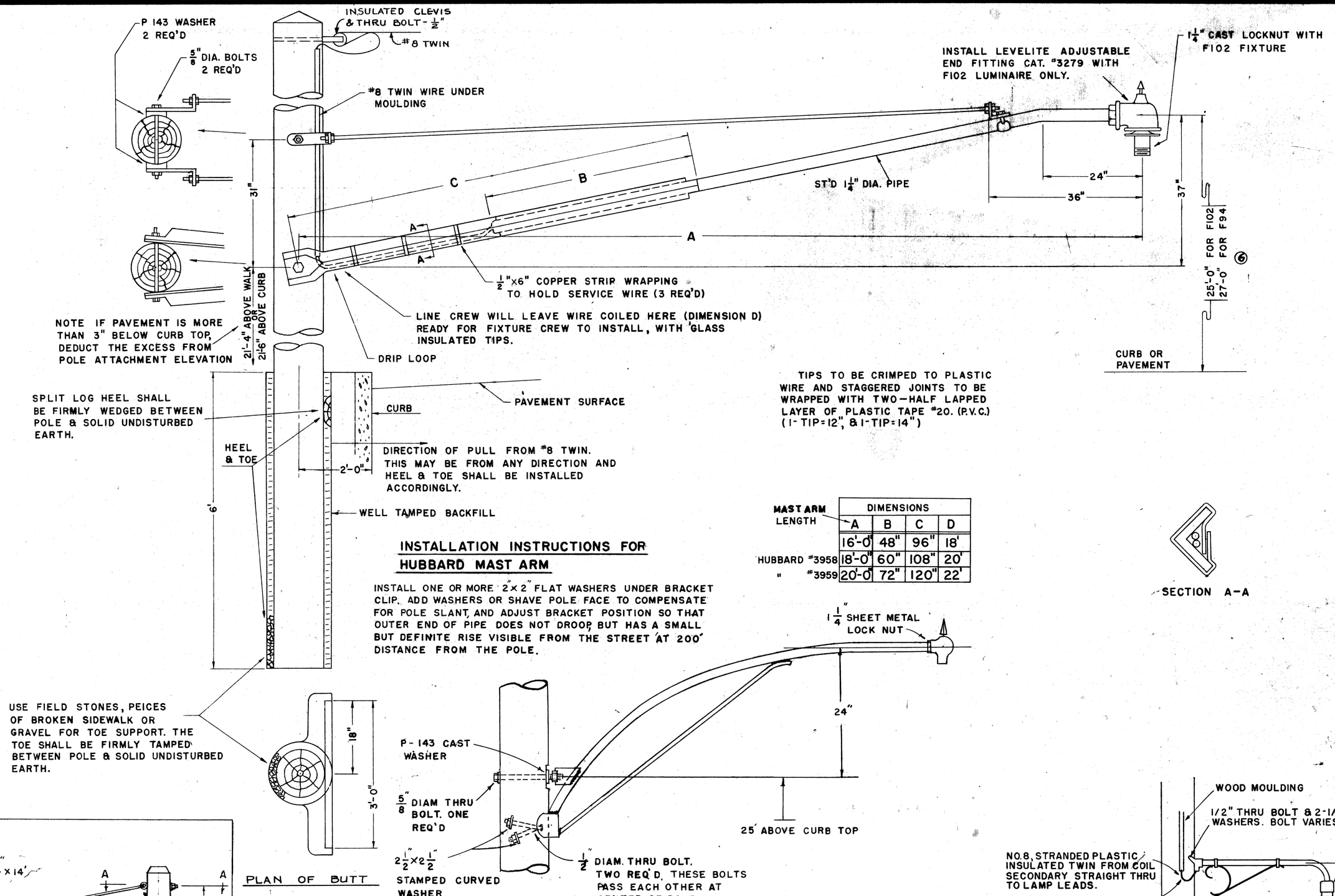

INSTALLATION INSTRUCTIONS FOR HUBBARD MAST ARM

INSTALL ONE OR MORE 2"x 2" FLAT WASHERS UNDER BRACKET CLIP. ADD WASHERS OR SHAVE POLE FACE TO COMPENSATE FOR POLE SLANT, AND ADJUST BRACKET POSITION SO THAT OUTER END OF PIPE DOES NOT DROOP BUT HAS A SMALL BUT DEFINITE RISE VISIBLE FROM THE STREET AT 200' DISTANCE FROM THE POLE.

MAST ARM LENGTH	DIMENSIONS A	B	C	D
	16'-0"	48"	96"	18'
HUBBARD #3958	18'-0"	60"	108"	20'
" #3959	20'-0"	72"	120"	22'

PLAN OF BUTT

6 FT. OR 10 FT. UPSWEEP STREET LIGHTING BRACKET
⑥ PIPE & BRACE TYPE

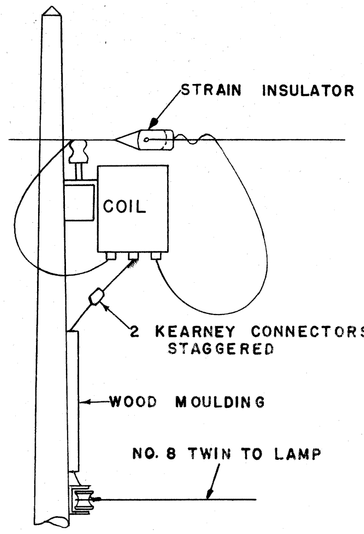

TYPICAL COIL INSTALLATION

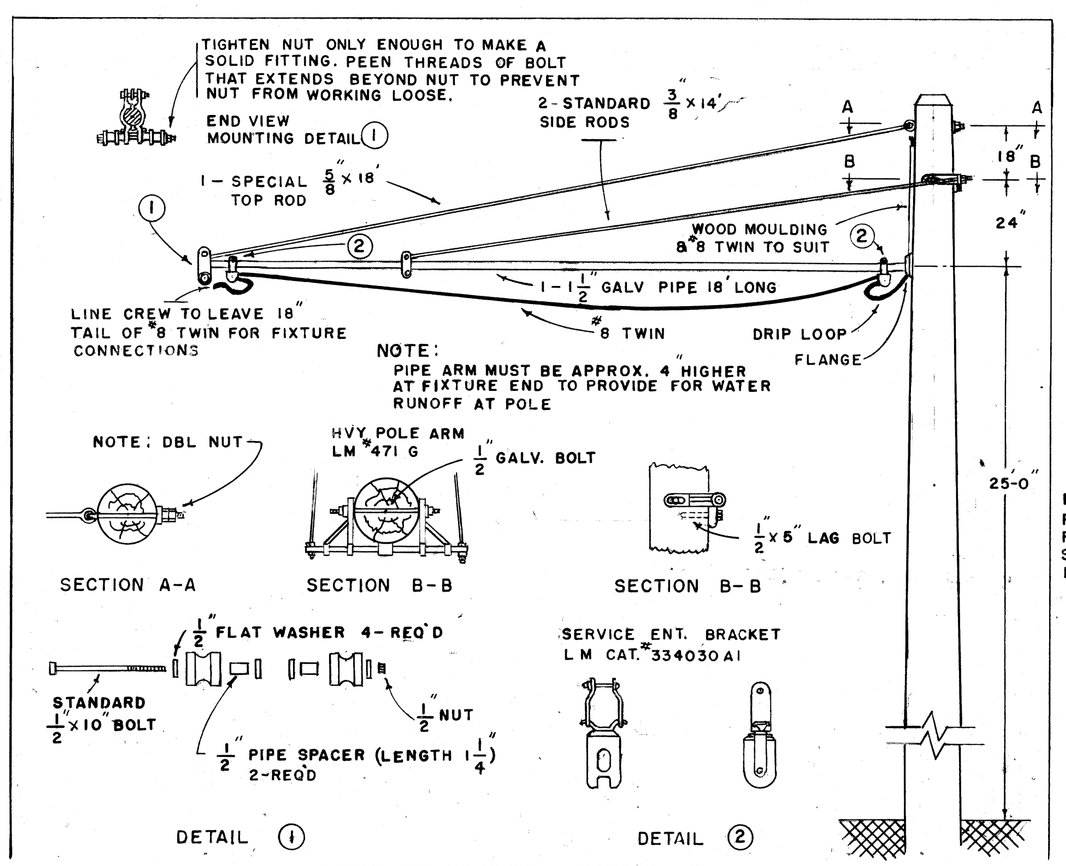

NOTE: PIPE ARM MUST BE APPROX. 4" HIGHER AT FIXTURE END TO PROVIDE FOR WATER RUNOFF AT POLE

TYPICAL INSTALLATION OF MODIFIED ⑤ F100 MAST ARM ON 35' POLE

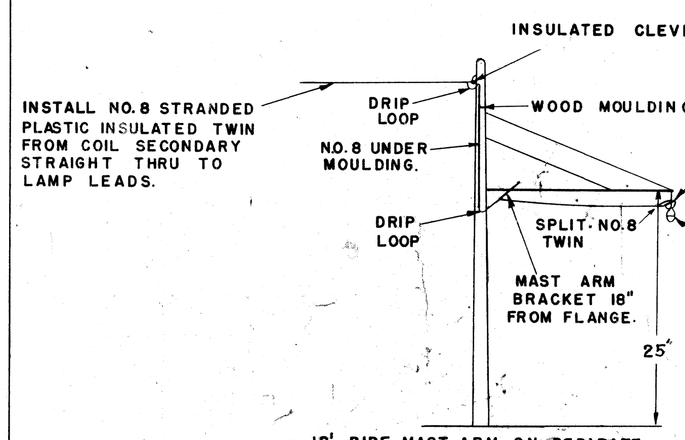

18' PIPE MAST ARM ON SEPARATE WOOD POLE WITH FORM NO.100 LUMINAIRE

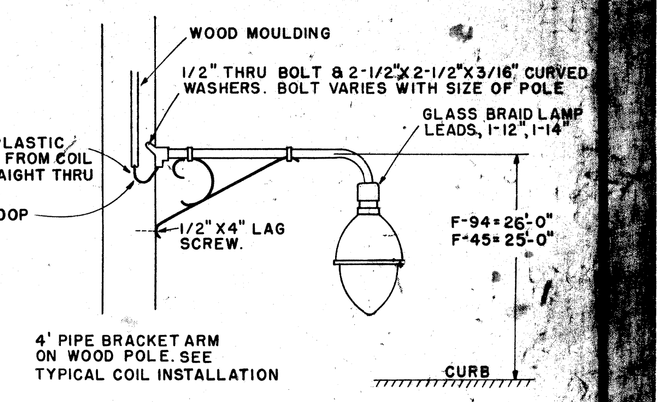

4' PIPE BRACKET ARM ON WOOD POLE. SEE TYPICAL COIL INSTALLATION

NO.	DESCRIPTION	DATE	BY
6	ADDED 10' ARM & MTG. HEIGHT CHANGE IN HUBBARD M.A.	8-7-60	M.J.C.
5	REMOVED 16 M.A. ON LINE POLE WITH F100 UNIT & ADDED INST. OF F100 M.A. ON SAME POLE	7-8-59	M.J.C.
4	6" BRACKET ARM ADDED	5-7-56	CH
3	MOUNTING HEIGHT CHANGED	4-25-55	R.G.P.
2	4' BRACKET ARM ADDED. MISC. CHANGES	6-15-53	W.S.
1	HUBBARD M.A. REPL. FAB. M.A.	6-27-49	G.F.

CITY OF DETROIT
PUBLIC LIGHTING COMMISSION
P.L.C. DETAILS
STREET LIGHTING MAST ARM

DRAWN BY	FILE NO.
R.S.C.	55-5E
CHECKED BY	SHEET NO.
A.J.L.	14
APPROVED BY	DATE
A.J.L.	7-7-47

MICHIGAN STATE HIGHWAY DEPARTMENT

APPROVED _____ CHIEF BRIDGE DRAFTSMAN

APPROVED _____ ENGINEER OF BRIDGE DESIGN

ROAD DOES	
DRAWN BY	
TRACED BY	
CHECKED BY	
SHEET 79 OF	

82251 F C16

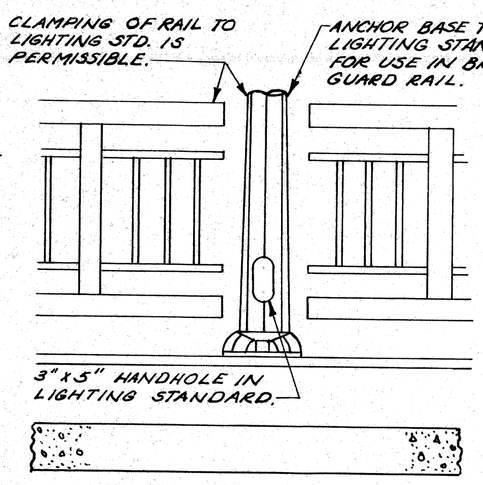

TYPICAL ELEVATION

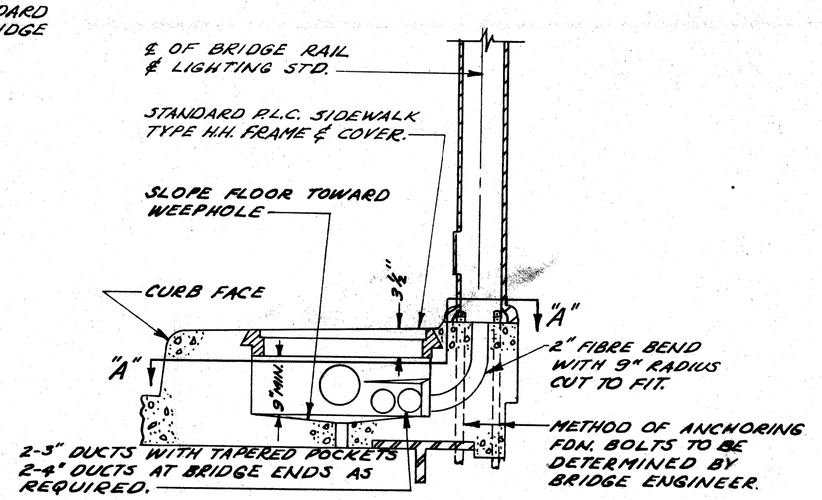

TYPICAL SECTION

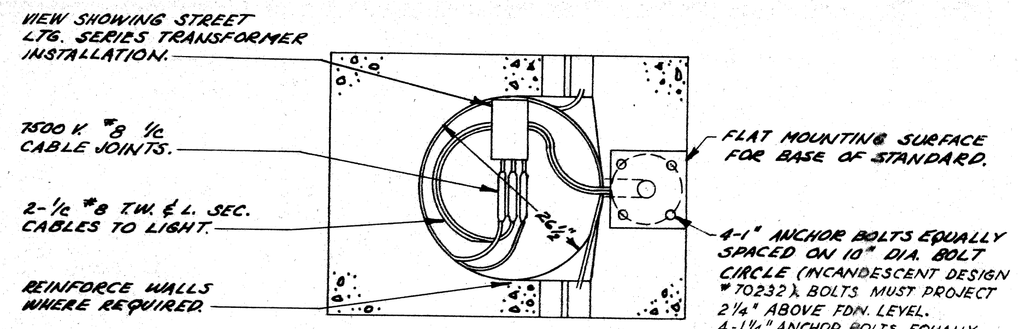

SECTION "A-A"

BRIDGE RAIL LIGHTING STANDARD INSTALLATION

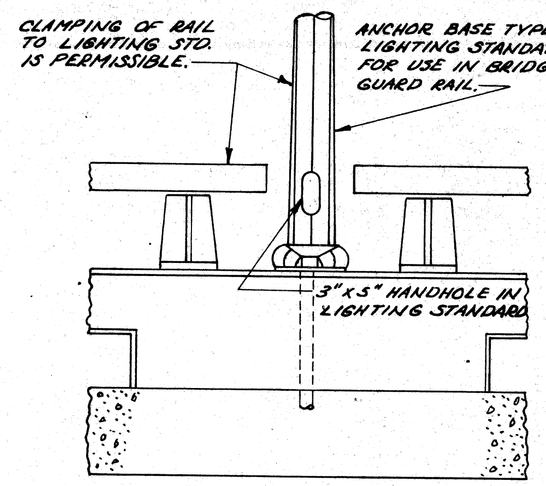

TYPICAL ELEVATION

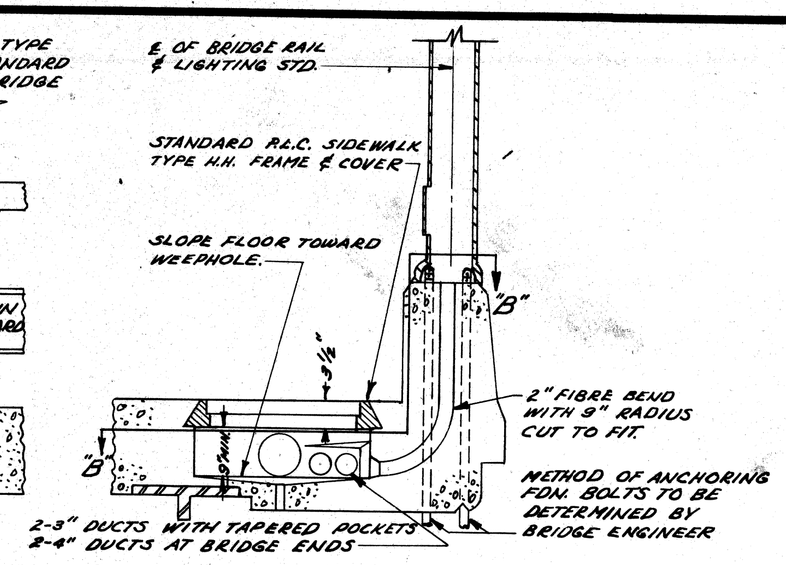

TYPICAL SECTION

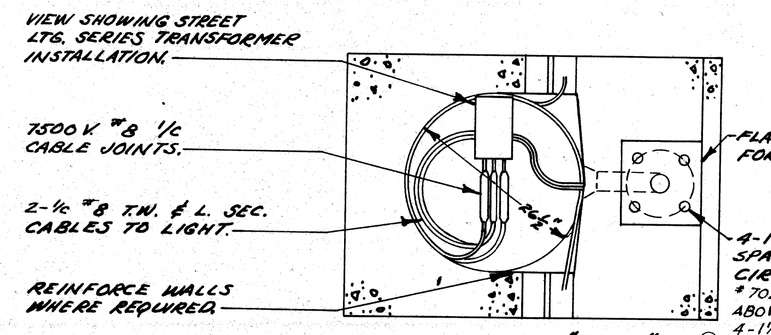

SECTION "B-B" ①

BRIDGE RAIL LIGHTING STANDARD INSTALLATION (WITH BUMPER RAIL)

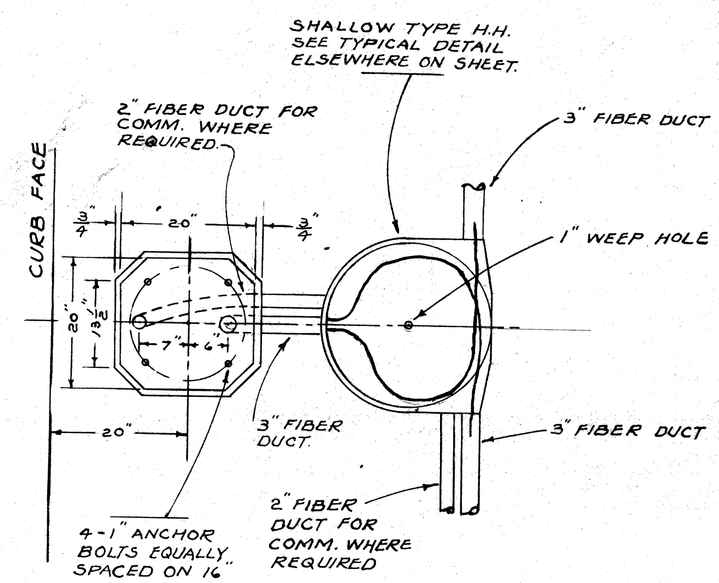

PLAN No. 5

LAMP POST FDN FOR 18" SQ. TRANSF. BASE LTG STD ON BRIDGE WHERE REQ'D ③

1

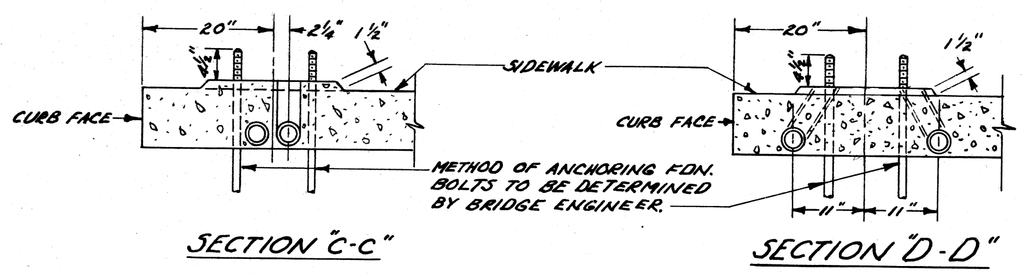

SECTION "C-C"

SECTION "D-D"

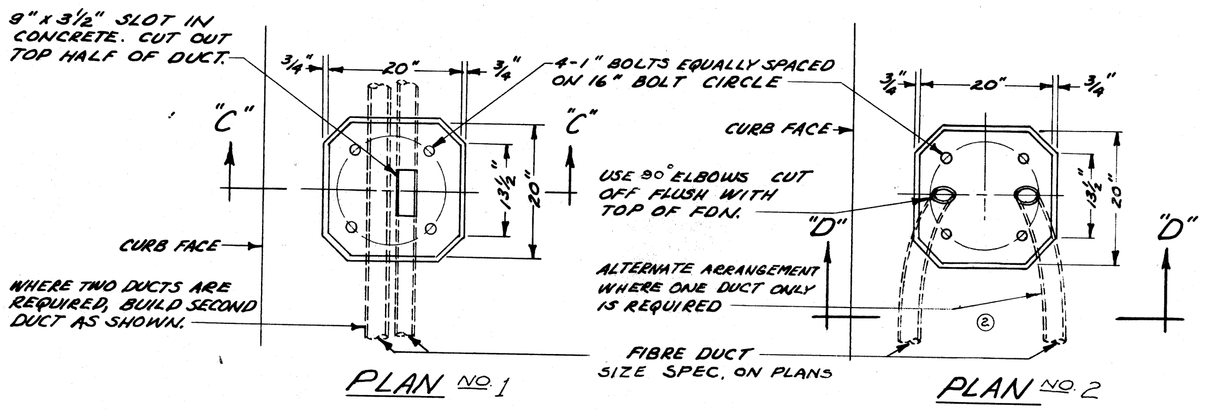

PLAN NO. 1

PLAN NO. 2

LAMP POST FOUNDATION ON BRIDGE FOR 18" SQ. BASE LIGHTING STANDARD

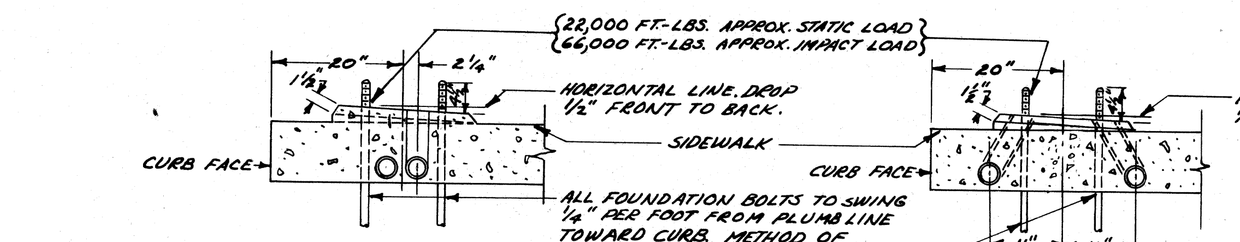

SECTION "E-E"

SECTION "F-F"

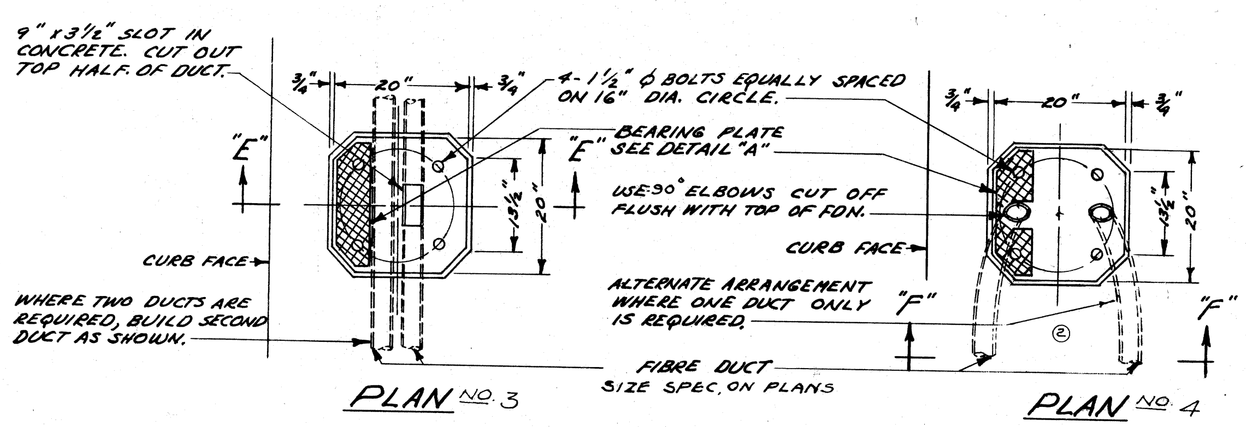

PLAN NO. 3

PLAN NO. 4

LAMP POST FOUNDATION ON BRIDGE FOR 18" SQ. BASE D.S.R. COMBINATION STANDARD

MATERIAL
1/4" FLAT MILD STEEL

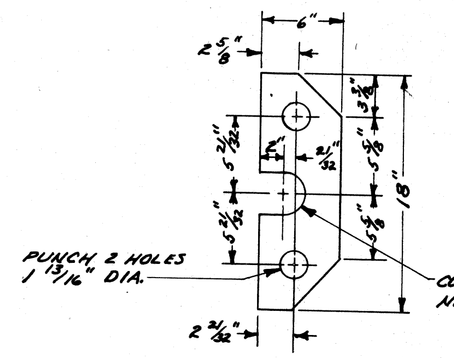

BEARING PLATE
DETAIL "A"

NO.	DESCRIPTION	DATE	BY
①	ADDED FL. DESIGN TO BRIDGE RAIL DETAIL	9-24-57	W.K.F.
②	CHANGED 18 SQ. BASE F.DN	3-22-61	M.J.C.
③	ADDED 18 SQ. TRANSF. BASE ON BRIDGE	3-23-61	M.J.C.

CHK'D 5/12/55 GP REVISIONS REDRAWN 5/16/55

CITY OF DETROIT
PUBLIC LIGHTING COMMISSION

P. L. C. DETAILS - MISCELLANEOUS

DRAWN BY	FILE NO.
DJN	55-3A
CHECKED BY	SHEET NO.
	15
APPROVED BY	DATE
	5-6-55

MICHIGAN STATE HIGHWAY DEPARTMENT

APPROVED _____ CHIEF BRIDGE DRAFTSMAN

APPROVED _____ ENGINEER OF BRIDGE DESIGN

APPROVED _____ BRIDGE ENGINEER

SQUAD BOSS			
DRAWN BY			
TRACED BY			
CHECKED BY			

SHEET 74 OF

82251 F C16

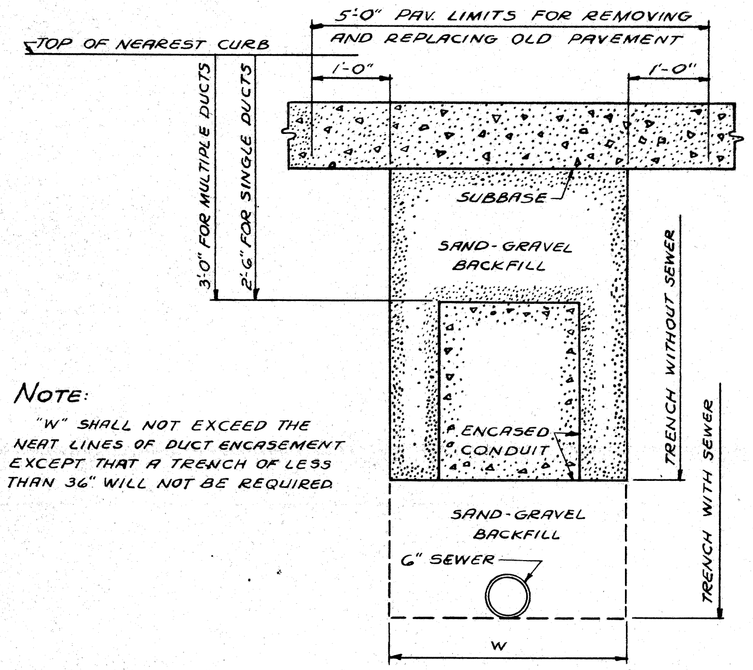

NOTE:
"W" SHALL NOT EXCEED THE NEAT LINES OF DUCT ENCASEMENT EXCEPT THAT A TRENCH OF LESS THAN 36" WILL NOT BE REQUIRED.

TYPICAL SECTION OF TRENCH

SCALE: 3/4" = 1'-0"

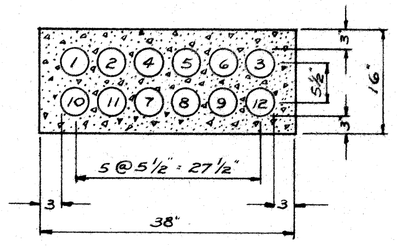

12-4" IN BRIDGE APPROACH

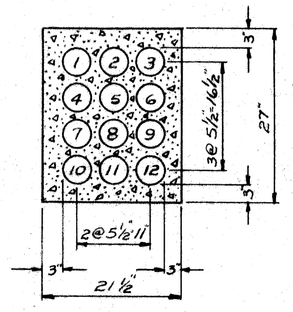

12-4" DUCTS

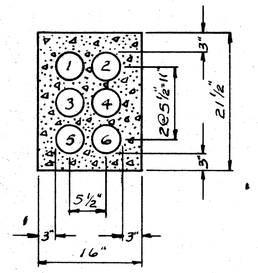

6-4" DUCTS

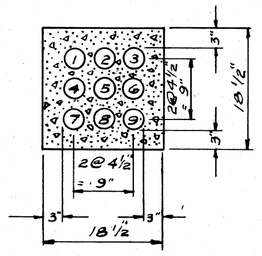

9-3" DUCTS

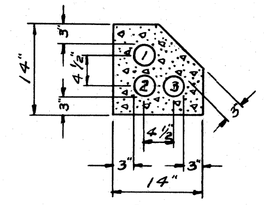

3-3" DUCTS

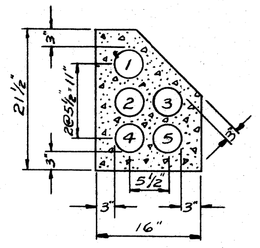

① 5-4" DUCTS

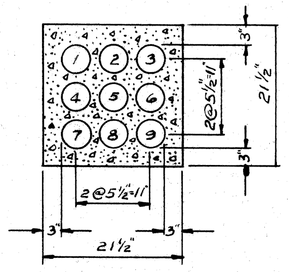

9-4" DUCTS

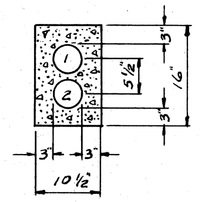

2-4" DUCTS

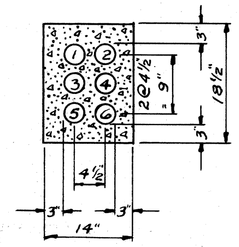

6-3" DUCTS

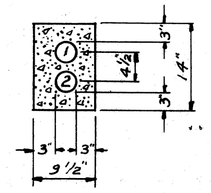

2-3" DUCTS

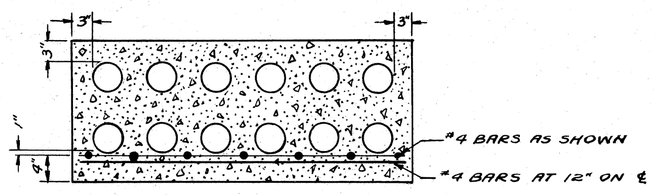

SECTION A-A

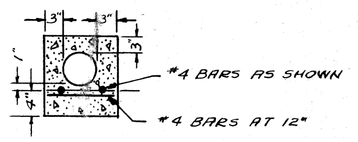

SECTION B-B

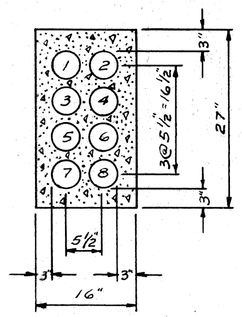

8-4" DUCTS

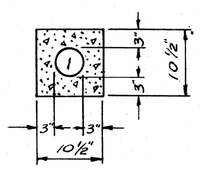

1-4" DUCT

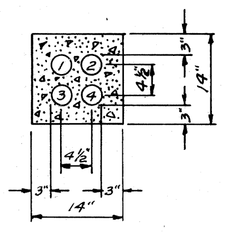

4-3" DUCTS

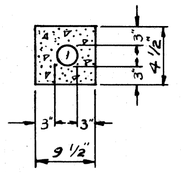

1-3" DUCT

TYPICAL DUCT SECTIONS

SCALE: 3/4" = 1'-0"

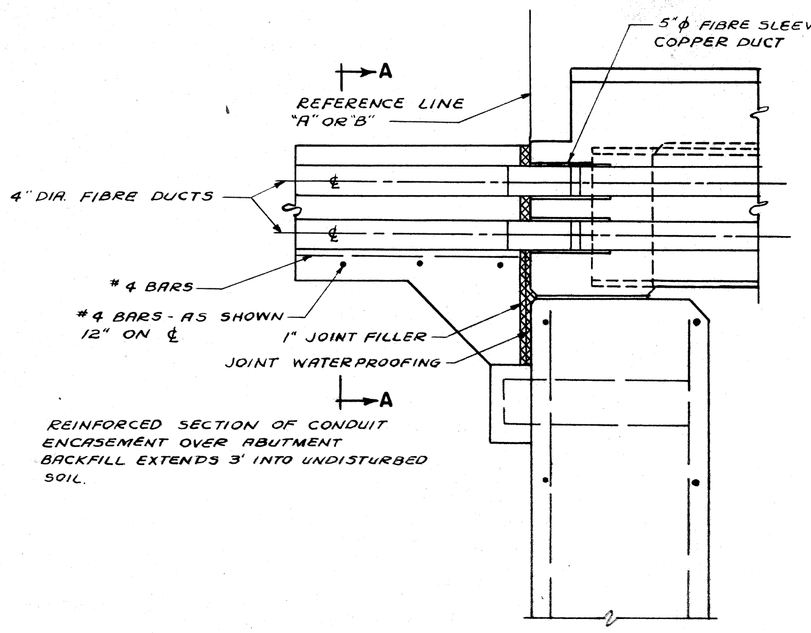

② SECTION THROUGH BACKWALL
SHOWING SUPPORTS FOR 12-4" DIA. ENCASED CONDUIT AND EXPANSION JOINTS

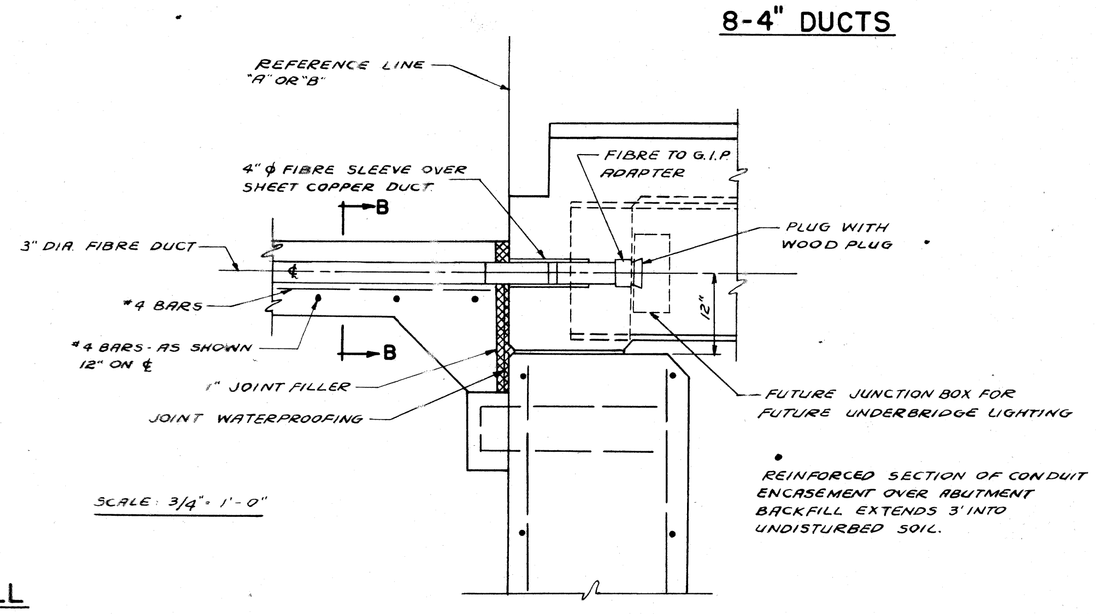

② SECTION THROUGH BACKWALL
SHOWING SUPPORTS FOR 1-3" DIA. ENCASED CONDUIT AND EXPANSION JOINT FOR UNDERBRIDGE LIGHTING

4-15-55
REDRAWN 2-1-61 R.K.

CITY OF DETROIT
PUBLIC LIGHTING COMMISSION
P.L.C. DETAILS
MISCELLANEOUS DUCT SECTIONS

DRAWN BY	FILE NO.
DJN	55-3B
CHECKED BY	SHEET NO.
M.V.C.	24
APPROVED BY	DATE
G.T.C. Mews	7-10-53

MICHIGAN STATE HIGHWAY DEPARTMENT

REVISIONS

NO.	DESCRIPTION	DATE	BY
1	ADDED 5-4" DUCTS	11-18-59	R.P.
2	ADDED SECTION THROUGH BACKWALL FOR 12-4" & 1-3"	2-29-56	R.T.

SQUAD BOSS		
DRAWN BY		
TRACED BY		
CHECKED BY		

SHEET 75 OF

82251 F C16

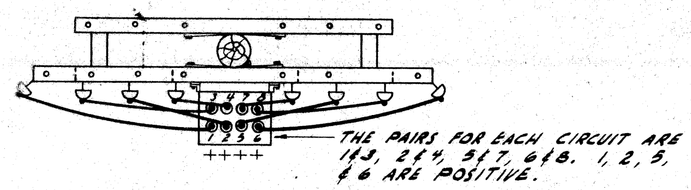

PLAN AT FIFTH GAIN INCLUDING B/C POTHEAD.

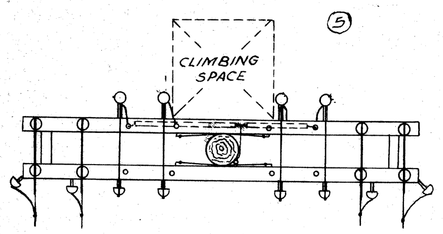

PLAN AT THIRD ARM

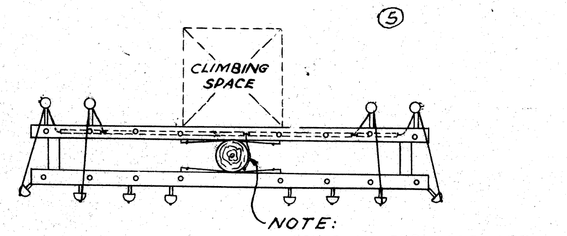

PLAN AT ~~FIFTH~~ ARM

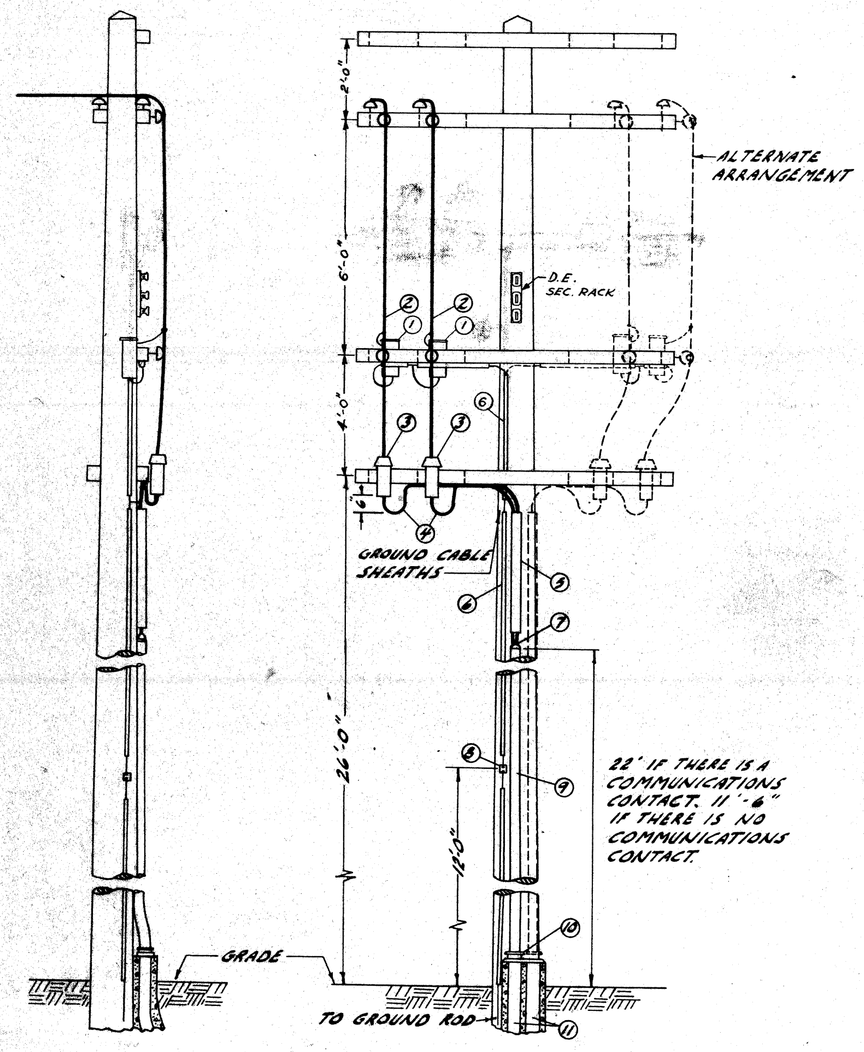

TYPICAL STREET LIGHTING CABLE POLE
NO SCALE

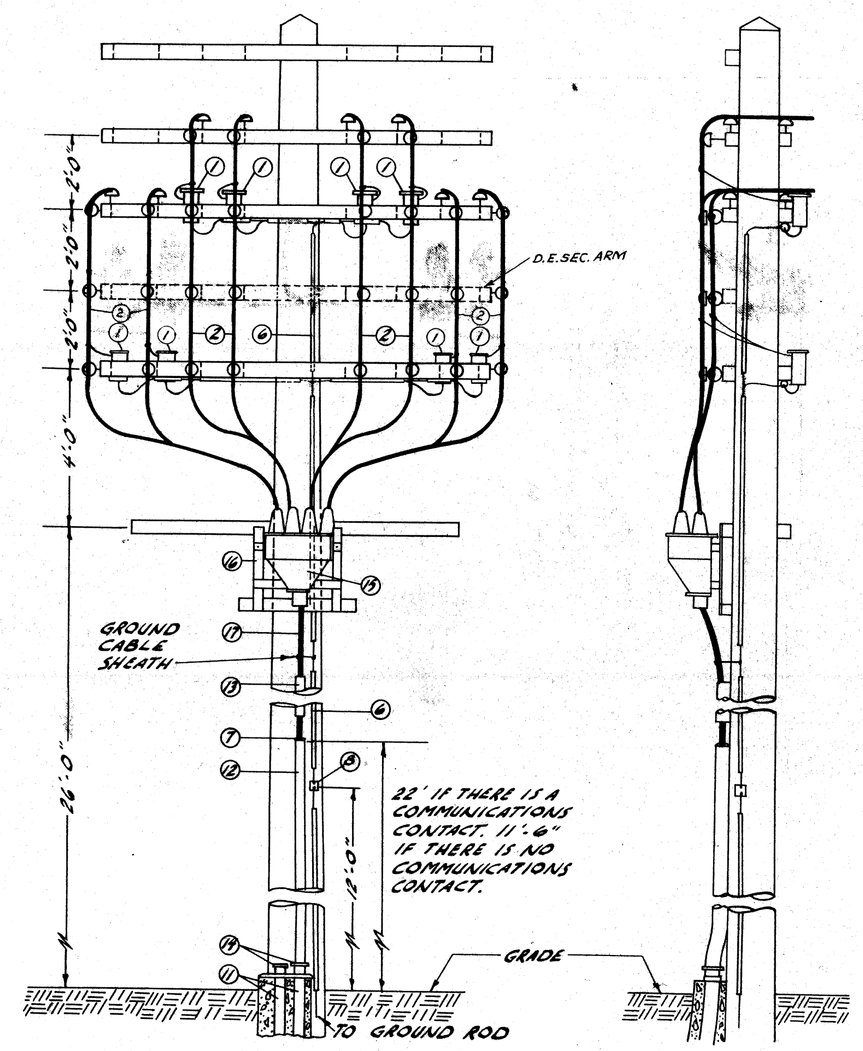

TYPICAL 8/C STREET LIGHTING CABLE POLE
NO SCALE

DETAIL ITEMS

1	LIGHTNING ARRESTER.
2	#6 OVERHEAD TRAINING WIRE.
3	1/c POTHEAD.
4	1/c #8 L.C. CABLE.
5	3" SPLIT FIBRE DUCT ABOVE G.I.P. TO 8" BELOW CROSSARM.
6	#2 GROUND WIRE UNDER WOOD MOULDING.
7	LEAD WEATHERCAP & GALV. BUSHING.
8	FOUR SCREW CONNECTOR.
9	2½" G.I.P. RISER
10	2½" X 4" REDUCER ADAPTER.
11	4" FIBRE CONDUIT.
12	3" G.I.P. RISER.
13	4" SPLIT FIBRE DUCT.
14	3" X 4" REDUCER ADAPTER.
15	8/C POTHEAD.
16	8/C POTHEAD MOUNTING BRACKET (SEE DETAIL "A").
17	8/C L.C. CABLE.

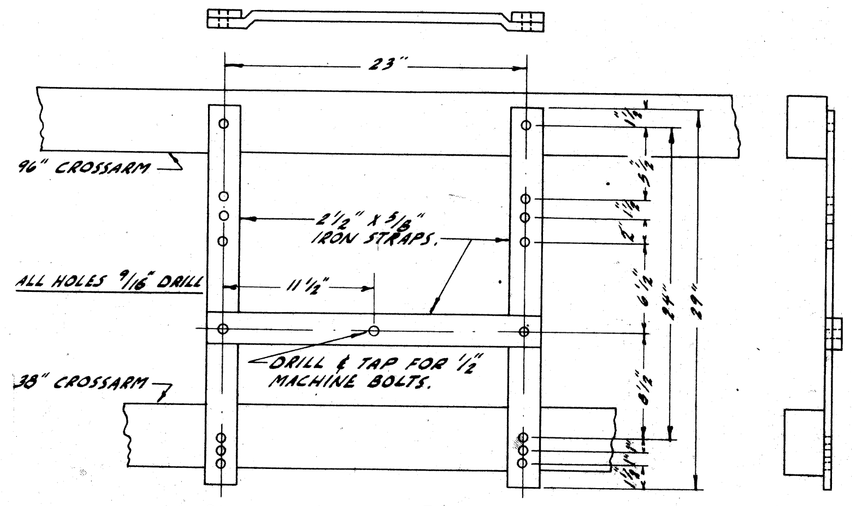

BRACKET FOR 8/C POLE TYPE POTHEAD

DETAIL "A"
NO SCALE

NOTES

1. SEE SHEET 10 OF P.L.C. DETAILS FOR GROUND ROD AND CONDUIT INSTALLATION.

REVISIONS			
NO.	DESCRIPTION	DATE	BY
4	REFRAMED ST. LTG. CABLE POLE'S	8-18-54	W.K.F.
5	REMOVED ENVELOPE OF EXHAUST GASES	3-11-36	M.J.C.

REVISIONS			
NO.	DESCRIPTION	DATE	BY
1	ADDED 8/C C.R. DETAIL	2-7-55	DJN
2	CHANGED DIM. TO POTHEAD	5-3-55	R.T.
3	CHANGED GROUNDING DETAIL & ADDED CLIMBING SPACE DETAIL	6-2-55	R.C.D.

CITY OF DETROIT
PUBLIC LIGHTING COMMISSION

P. L. C. DETAILS--CABLE POLES

DRAWN BY	FILE NO.
DJN	56-3B
CHECKED BY	SHEET NO.
CWB	26
APPROVED BY	DATE
	4-22-55

MICHIGAN STATE HIGHWAY DEPARTMENT

APPROVED _____ CHIEF BRIDGE DRAFTSMAN
APPROVED _____ ENGINEER OF BRIDGE DESIGN
APPROVED _____ BRIDGE ENGINEER

BOARD NO.	
DRAWN BY	
TRACING NO.	
CHECKED BY	
DATE	19

82251F C16

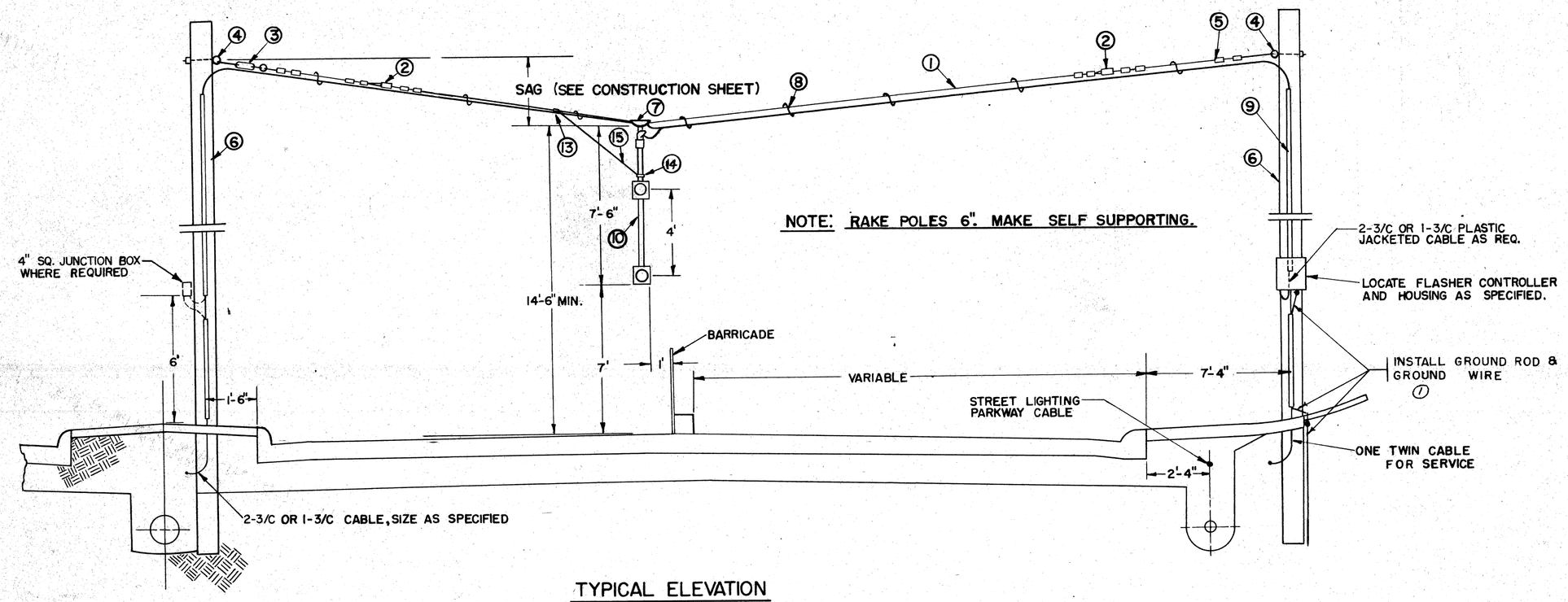

TYPICAL ELEVATION

SUSPENSION TYPE MOUNTING OF DOUBLE FLASHER SIGNAL

DETAIL 'A'

N.T.S.

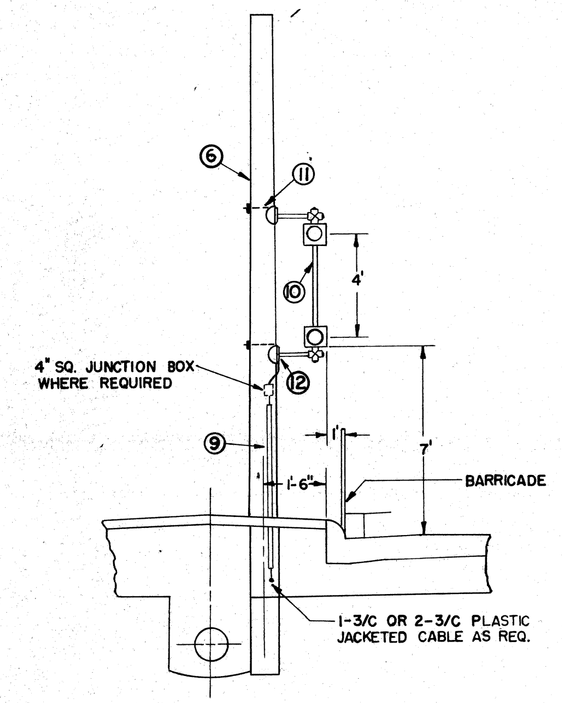

ELEVATION

BRACKET TYPE MOUNTING OF DOUBLE FLASHER SIGNAL

DETAIL 'B'

N.T.S.

DETAIL NOTES

NO.	DESCRIPTION
1	1/4" GUY WIRE
2	STRAIN INSULATOR
3	5/8"x 18" TURNBUCKLE
4	5/8" EYE BOLT
5	WIRE CLIPS
6	25' CLASS 3, OR BETTER, WOOD POLE
7	SPAN WIRE HANGER
8	PREFORMED STEEL LASHINGS
9	WOOD MOULDING
10	DOUBLE FLASHER ASSEMBLY
11	1/2"x 16" THRU-BOLT AT TOP OF POLE PLATE AND 1/2"x5" LAG SCREWS AT SIDES
12	POLE PLATE FOR 1-1/2" PIPE WITH BUSHED CABLE ENTRANCE
13	ONE BOLT GUY CLAMP
14	1-1/2" PIPE CLAMP – 1/4"x 1" MATERIAL
15	60"x 3/16"x 3/4" GALVANIZED IRON BAR

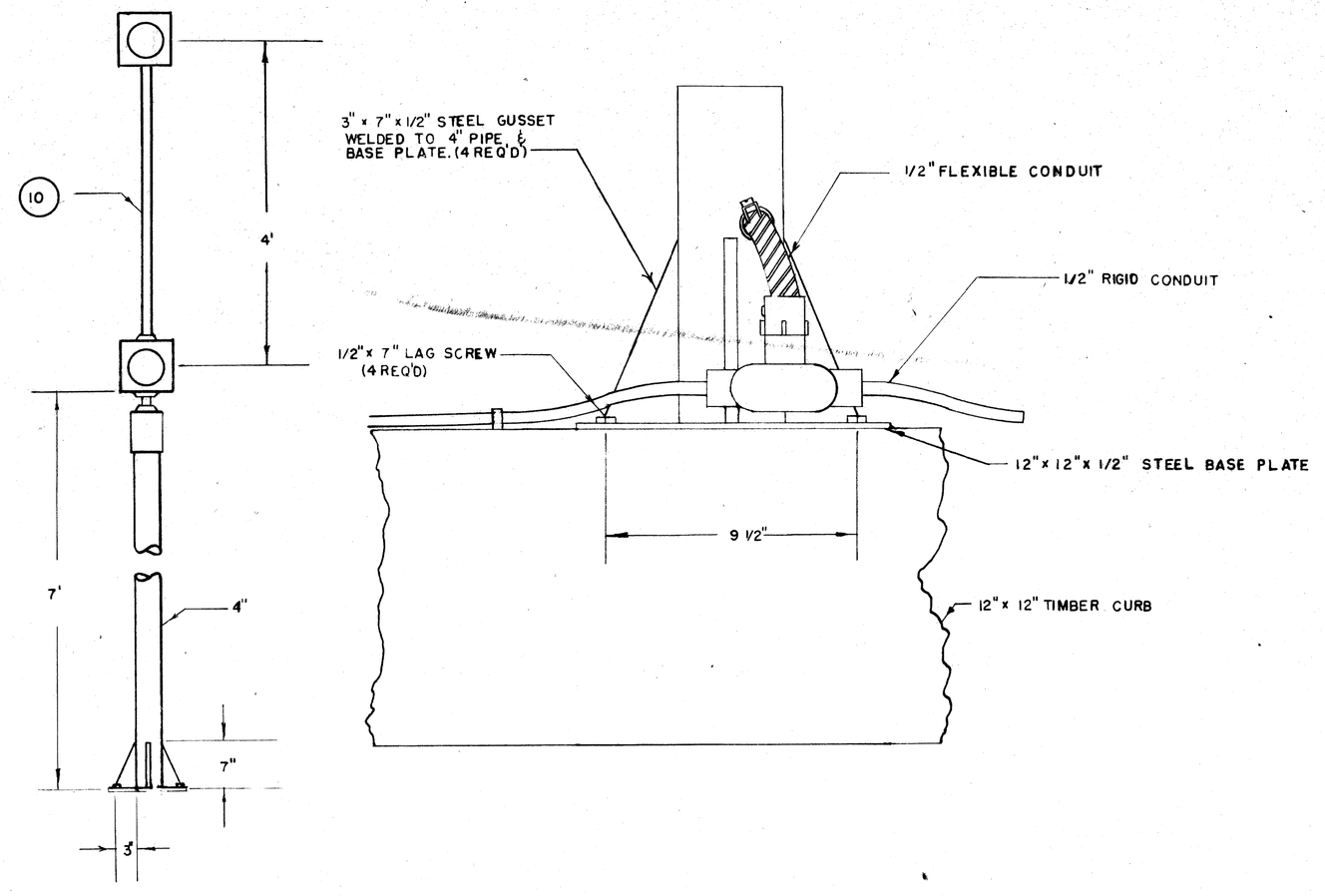

ELEVATION

PEDESTAL TYPE MOUNTING OF DOUBLE FLASHER SIGNAL

DETAIL 'C'

N.T.S.

APPROVED BY

CITY OF DETROIT
PUBLIC LIGHTING COMMISSION
—P.L.C. DETAILS—
DOUBLE FLASHER SIGNAL
(TYPICAL)

DRAWN BY	FILE NO.
L.W.M.	55-3
CHECKED BY	SHEET NO.
W.H.F.	29
APPROVED BY	DATE
Y.F. Mews	12-17-59

MICHIGAN STATE HIGHWAY DEPARTMENT

REVISIONS

NO.	DESCRIPTION	DATE	BY
1	ADDED GROUND ROD	4-6-61	M.J.C.

SQUAD BOSS	
DRAWN BY	
TRACED BY	
CHECKED BY	

SHEET 77 OF

82251 F C16

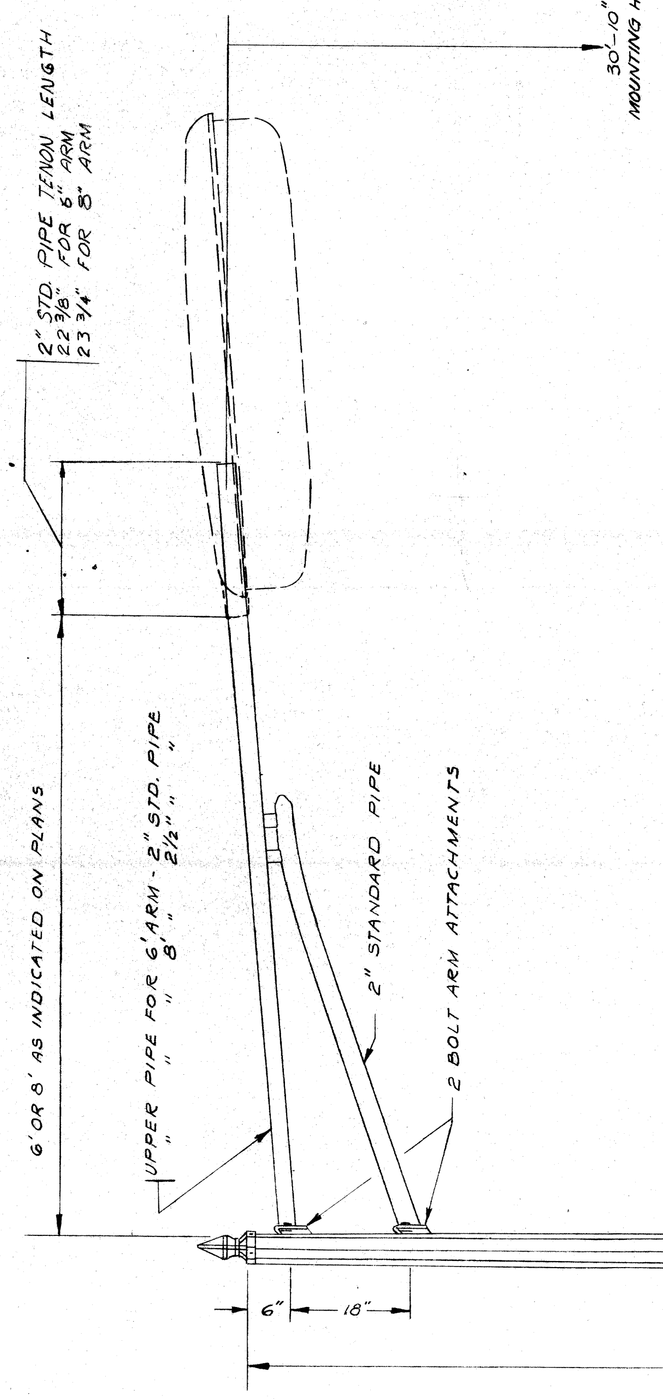

SCALE: 3/4" = 1'

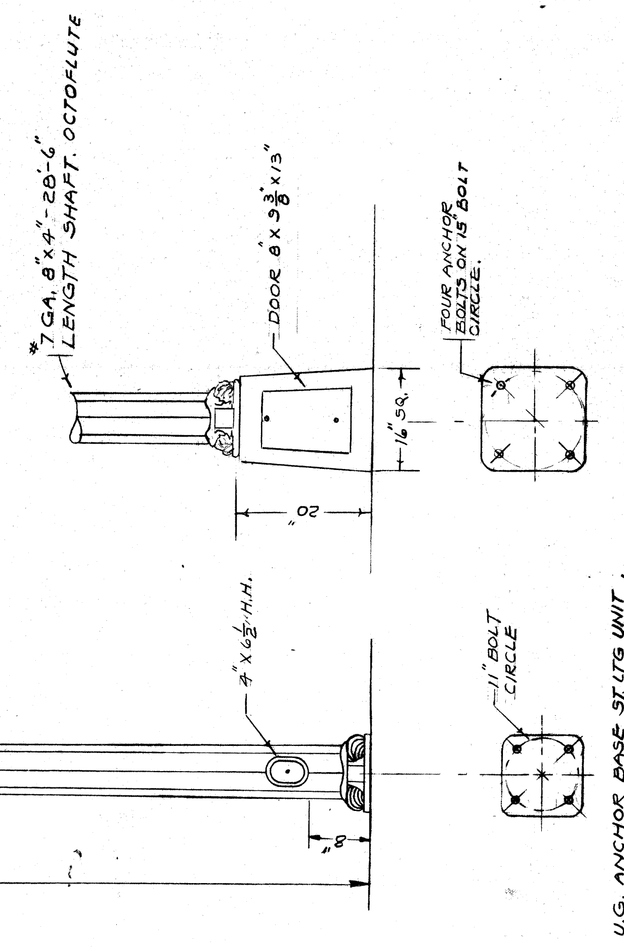

CITY OF DETROIT
PUBLIC LIGHTING COMMISSION
— DETAIL —
U.G. STREET LIGHTING STANDARD

DRAWN BY	FILE NO.
L.M.	55-3
CHECKED BY	SHEET NO.
DF.	39
APPROVED BY	DATE
DF-Mens	3-27-59

MICHIGAN STATE HIGHWAY DEPARTMENT

REVISIONS

NO.	DESCRIPTION	DATE	BY
1	ADDED TRANS. BASE.	3-7-61	M.J.C.

SQUAD BOSS	
DRAWN BY	
TRACED BY	
CHECKED BY	
SHEET 78 OF	

82251 F C16

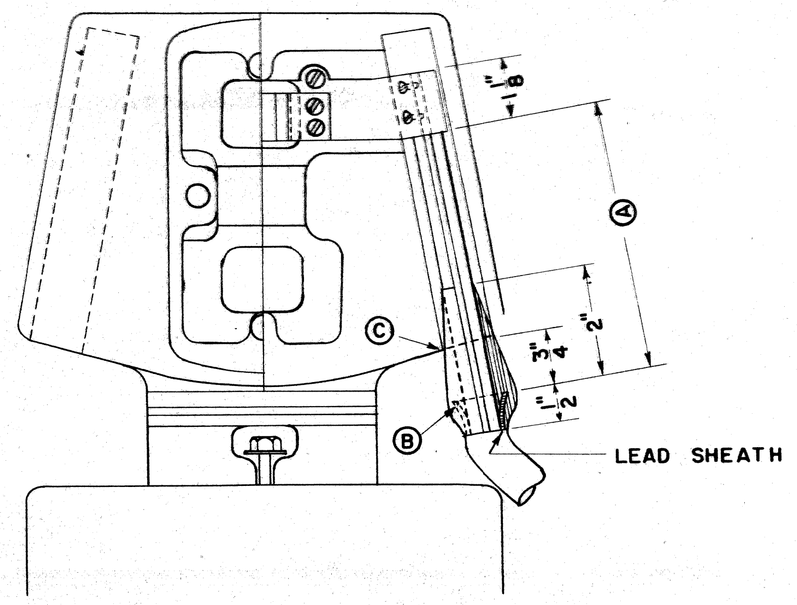

CABLE CONNECTION TO SERIES CUTOUT ON COMBINATION COIL

(A) THIS DISTANCE VARIES DEPENDING UPON MANUFACTURE OF COIL.
(B) CUT LEAD SHEATH AND CHIP OFF WITH CHIPPING IRON. DO NOT BREAK OFF BY BENDING. REMOVE INSULATION AT END FOR CONNECTION. BELL LEAD SHEATH EVENLY AND FILL SHEATH CAVITY WITH BISHOP ADHESIVE #55 B.
(C) APPLY TAPE #1 OVER BELL TO FORM A TIGHT FIT INTO PORCELAIN. COVER TAPE #1 WITH 2 LAYERS OF TAPE #2 (PLASTIC ELECTRICAL TAPE) TO APPROX. 3/4" FROM UPPER END OF TAPE #1.

#8 LIGHTING CABLE JOINT

(A) 1 1/2" #8 COPPER SLEEVE, TIGHTLY CLOSED AND SWEATED ON CONDUCTOR.
(B) TAPE #1 APPLIED TO AN OVERALL DIMENSION 50% GREATER THAN ORIGINAL DIAMETER OVER P.V.C. JACKET ON CABLE (.9 INCHES OVERALL). APPLY WITH ENOUGH TENSION TO REDUCE WIDTH OF TAPE TO 75% OF ORIGINAL WIDTH.
(C) OVERLAP END OF LEAD SHEATH WITH TAPES.
(D) 2 LAYERS OF TAPE #2 APPLIED HALF LAP.
(E) LEAD SLEEVE, 8" LONG, 1/8" WALL, 1 1/4" DIAMETER.
(F) SPECIAL LOW TEMPERATURE CADMIUM ALLOY WIPING METAL. SEE "SPECIAL PRECAUTIONS".

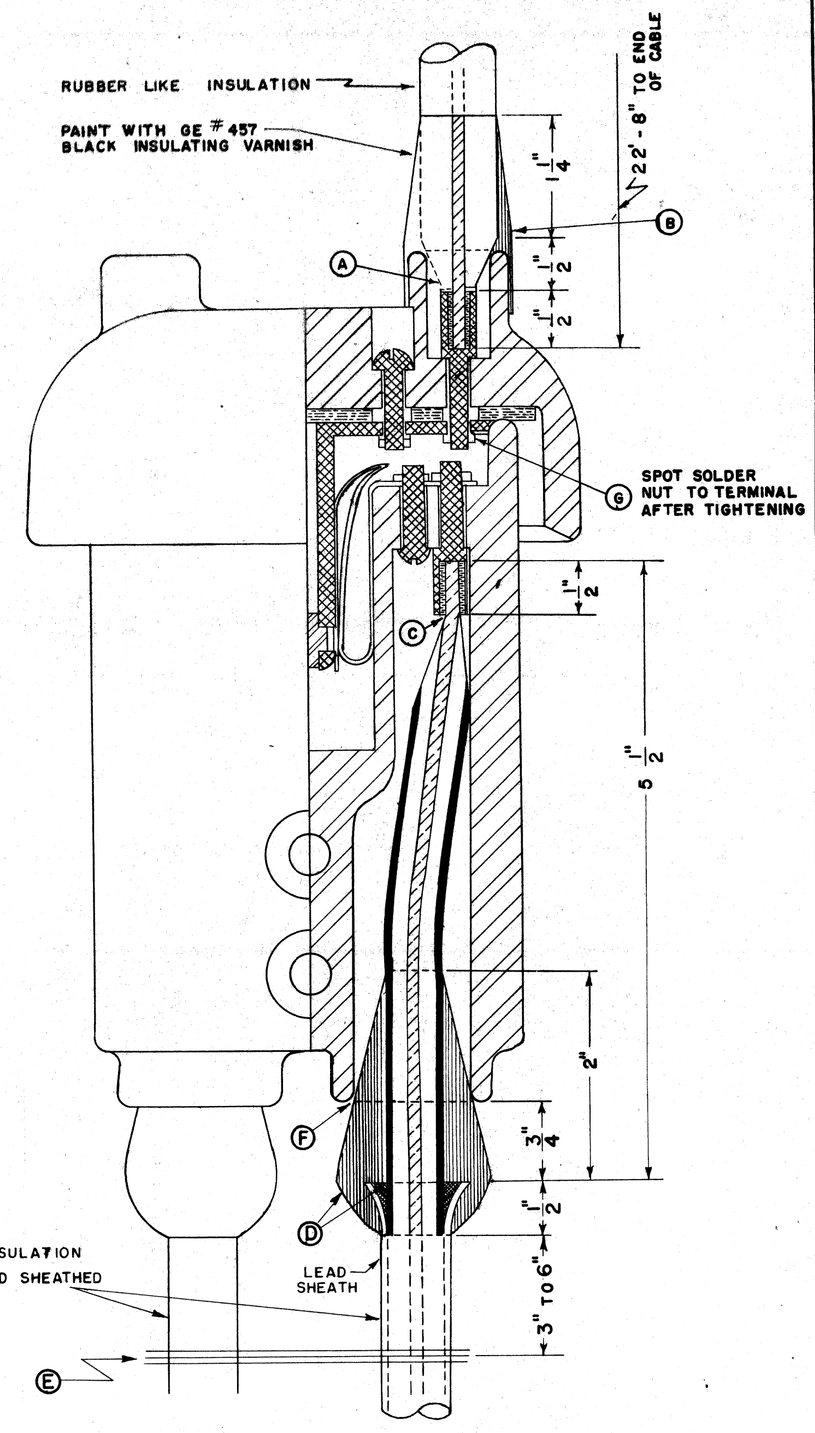

CONNECTION FOR SERIES CUTOUT

(A) SWEAT TERMINAL & PENCIL RUBBER INSULATION TO FIT SNUGLY IN PORCELAIN OPENING SO THAT AS NUT (G) IS DRAWN UP TIGHT THE OPENING IS COMPLETELY AND TIGHTLY FILLED.
(B) BUILD UP WITH TAPE #3 AS SHOWN AND COVER WITH 2 LAYERS OF 1/2" HALF LAP, TAPE #2.
(C) SWEAT CONDUCTOR INTO TERMINAL & PENCIL POLYETHYLENE INSULATION AND PVC JACKET SMOOTHLY.
(D) CUT LEAD SHEATH AND CHIP OFF WITH CHIPPING IRON. DO NOT BREAK OFF BY BENDING. CUT INSULATION FOR CONNECTION. BELL THE LEAD SHEATH AND FILL SHEATH CAVITY WITH BISHOP ADHESIVE #55 B. APPLY TAPE #1 OVER BELL SUFFICIENTLY TO FORM A TIGHT FIT BETWEEN CABLE AND PORCELAIN AT (F), COVER TAPE #1 WITH 2 LAYERS OF TAPE #2 (PLASTIC ELECTRICAL TAPE) TO ABOUT 3/4" FROM END OF TAPE #1. SEE "SPECIAL PRECAUTIONS".
(E) #18 SERVICE WIRE OR BRAID 4 WRAPS BETWEEN CABLES AND SWEATED TO LEAD SHEATH FOR BOND TIE TO GROUND WIRE.

CONNECTIONS FOR I/C 7500 V. POTHEAD

(A) CUT LEAD SHEATH AND CHIP OFF WITH CHIPPING IRON. DO NOT BREAK OFF BY BENDING. SLIP THE LEAD CUP OVER THE CABLE. BELL THE LEAD SHEATH.
(B) SWEAT CONDUCTOR INTO TERMINAL (B) AND PENCIL INSULATION SMOOTHLY FOR 3/4".
(C) MOUNT TERMINAL (B) FIRMLY INTO PORCELAIN HOUSING. INVERT THE POTHEAD AND FILL WITH G&W NOVOID TYPE 9A ONLY. DO NOT HEAT THE COMPOUND MORE THAN IS NECESSARY FOR POURING.
(D) AFTER COMPOUND HAS COOLED, BUT WHILE STILL TACKY, SWEAT LEAD CUP TO SHEATH. USE CADMIUM ALLOY WIPING METAL WITH A MINIMUM OF HEAT.
(E) TRAIN THE CABLE AND MOUNT THE POTHEAD ON CROSSARM.
(F) SLIP THE CONE SHAPED RUBBER BUSHING ON THE RUBBER TYPE INSULATED CABLE RISER.
(G) SWEAT CONDUCTOR INTO TERMINAL (G) AND PENCIL INSULATION AS SHOWN.
(H) MOUNT THE TERMINAL FIRMLY INTO THE POTHEAD CAP.
(I) BUILD UP WITH TAPE #3 AND CARRY 2 LAYERS OVER THE END OF THE CAP TO POINT (I) AS SHOWN. COVER WITH 2 LAYERS, HALF LAP OF TAPE #2.

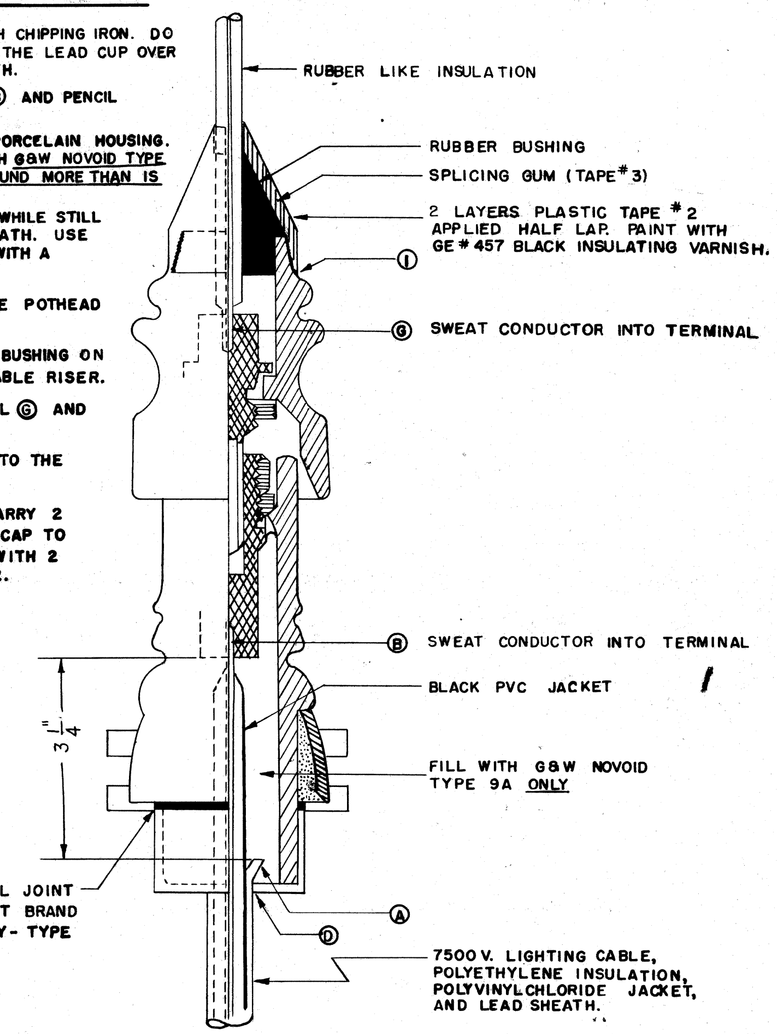

SPECIAL PRECAUTIONS

1. MATERIAL: TAPE #1 — BISHOP BI-SEAL #1 CLEAR POLYETHYLENE TAPE .02" THICK, 3/4" WIDE.
TAPE #2 — 3M SCOTCH BRAND #33 ELECTRICAL TAPE
TAPE #3 — JOHNS MANVILLE "DUTCH BRAND" ASTM RUBBER TAPE #8 ONLY
ADHESIVE — BISHOP 55-B
FILLING COMPOUND — G&W NOVOID TYPE 9A
WIPING METAL — OKONITE CADMIUM LOW TEMPERATURE ALLOY

NO SUBSTITUTIONS ALLOWED

2. USE SMALL HAND TORCH FOR WIPING JOINTS AT MINIMUM TEMPERATURE.
3. WHEN IT IS NECESSARY TO SPLICE POLYETHYLENE INSULATED CABLE TO RUBBER CABLE, USE ABOVE MATERIALS.

TRACED FROM P.L.C. DRAWING

CITY OF DETROIT
PUBLIC LIGHTING COMMISSION
P.L.C. DETAIL

DRAWN BY	FILE NO.
D-E	55-3
CHECKED BY	SHEET NO.
	47
APPROVED BY	DATE
H. L. Mero	8-4-60

MICHIGAN STATE HIGHWAY DEPARTMENT

REVISIONS

NO.	DESCRIPTION	DATE	BY
1	TAPE #3 CHANGED	2-22-61	R.K.J.

SQUAD BOSS	
DRAWN BY	
TRACED BY	
CHECKED BY	

SHEET 79 OF

82251 F C16

POLYETHYLENE INSULATION, POLYVINYLCHLORIDE JACKET LEADED CABLE CONNECTION SPECIFICATIONS

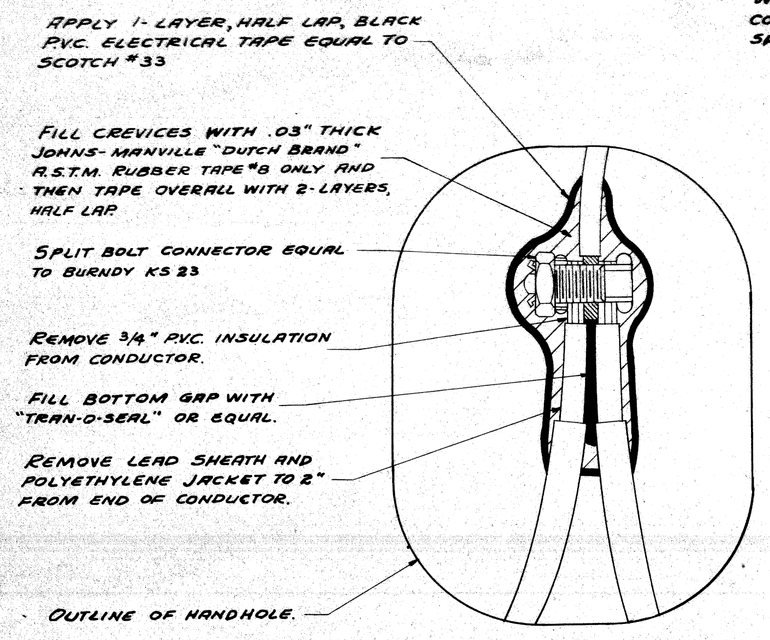

DETAIL-A

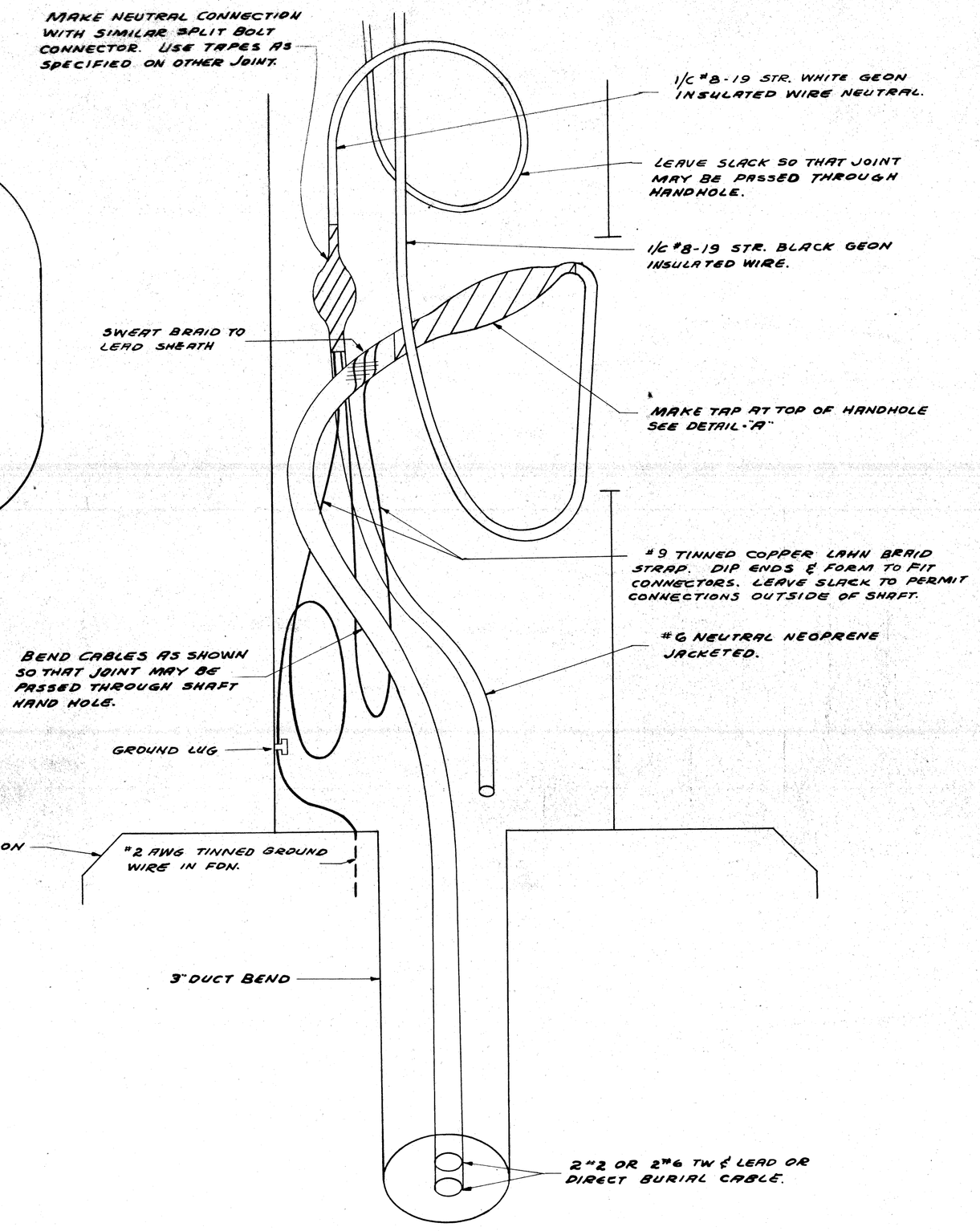

NOTE:

IF MORE THAN ONE LEAD COVERED CABLE IS IN BASE, CONNECT ALL CABLES WITH LAMN BRAID LEAVING SUFFICIENT SLACK BETWEEN EACH SO THAT INDIVIDUAL CABLE CAN BE PULLED THROUGH HANDHOLE.

CITY OF DETROIT
PUBLIC LIGHTING COMMISSION

MULTIPLE ST. LTG. CONNECTIONS

DRAWN BY	FILE NO.
R.K.J.	55-3
CHECKED BY	SHEET NO.
Fgy	49
APPROVED BY	DATE
Mens	3-30-61

MICHIGAN STATE HIGHWAY DEPARTMENT

REVISIONS

NO.	DESCRIPTION	DATE	BY

SQUAD BOSS		
DRAWN BY		
TRACED BY		
CHECKED BY		

SHEET 80 OF

82251 F C16

QUANTITY SHEET-B

B.P.R. DIV. NO.	STATE	PROJ. NO.	FISCAL YEAR	SHEET NO.	TOTAL SHEETS
4	MICH.	I-75-1(45)55			
ROUTE	STATE PROJECT	COUNTY	CITY	SHEET NO.	TOTAL SHEETS
	82251	Wayne	Detroit	81	

GRADING I 82251F C16 UN

AS PER PLANS

SHEET NO.	STATION TO STATION	Earth Excav. Cu. Yds.	Emb. + Shr. + Loss Cu. Yds.	Waste Cu. Yds.	Por. Mat. Gr. A Comp in Place Cu. Yds.	Por. Mat. Gr. B Comp. in Place Cu. Yds.	Subbase Comp. in Place Cu. Yds.	Selected Subbase 24A Tons
	Removal Items							
Sheet #15	584+00 to 595+00		80		20			
Sheet #16	595+00 to 605+07.50		16		130			
	Expressway Items							
	Edsel Ford Expressway							
Sheet #26	584+00 to 595+00	1,014	7,531	1,014			656	225
Sheet #28	595+00 to 605+07.50	1,463	1,656	1,463			735	664
	Walter P. Chrysler Expressway							
Sheet #30	163+71 to 167+35	55,021		45,409				
	Turning Roadways							
	WBD to SBD Turning Roadway							
Sheet #31	10+00 to 17+86.57	4,626	929	3,525			1,123	416
	Ramps							
	Beaubien Exit							
Sheet #32	593+80 to 597+61.17	3361		2,933			224	176
	Russell Exit							
Sheet #32	601+50.39 to 602+60	153		153			143	74
	Temp. Connection to Russell Exit							
Sheet #33	602+60 to 604+24	~~527~~ 573*		~~527~~ 573*				
	Manholes, Catch Basins & Sewer Trenches Excavation Includes Edge Drains	3,094	929	3,094	1,571	689		
	Bank Drains (Includes Edge Drains for Utilities)	246		246	149	95		
	Alterations to City Sewers	203		203	125			
	Fire Protection System	444		444	434			
	Alterations to Public Lighting	87		87	87			
TOTALS		70,285* ~~70,239~~	11,141	59,144* ~~59,098~~	2,516	784	2,881	1,555

AS CONSTRUCTED

STATION TO STATION	Earth Excav. Cu. Yds.	Emb. + Shr. + Loss Cu. Yds.	Waste Cu. Yds.	Por. Mat. Gr. A Comp in Place Cu. Yds.	Por. Mat. Gr. B Comp. in Place Cu. Yds.	Subbase Comp. in Place Cu. Yds.	Selected Subbase 31W Tons	EXPLANATION OF CHANGES
Removal Items								
Sheet #15 584+00 to 595+00		80		20				
Sheet #16 595+00 to 605+00	371			519				
Expressway Items								
Edsel Ford Expressway								
Sheet #26 584+00 to 595+00	1,084					835	228	
Sheet #28 595+00 to 605+07.50	1,592					798	638	
Walter P. Chrysler Expressway								
Sheet #30 163+71 to 167+35	49,845							
Turning Roadways								
W Bd. to S Bd. Turning Roadway								
Sheet #31 10+00 to 17+86.57	4,626					1,118	416	
Ramps								
Beaubien Exit								
Sheet #32 593+80 to 597+61.17	3,220					218	174	
Russell Exit								
Sheet #32 601+50.39 to 602+60	199					143	74	
Temp. Connection to Russell Exit								
Sheet #33 602+60 to 604+24	527							
Manholes, Catch Basins & Sewer Trenches Excavation Includes Edge Drains	2,728			1,129	680			
Bank Drains (Includes Edge Drains for Utilities)	0			0	0			
Alterations to City Sewers	325			220				
Fire Protection System	0			0				
Alterations to Public Lighting	34			25				
Authorization #1016	2,209							
								Decreased by Rec. 47
								Decreased by Rec. 47
								Decreased by Rec. 47
								Decreased by Rec. 47
								Decreased by Rec. 47
TOTALS	66,760			1,913	680	3,112	1,530	

GUARD RAIL & GUARD POSTS I 82251F C16 UN

AS PER PLANS

SHEET NO.	Two Cable Guard Rail Lin. Ft.	Steel Beam Guard Rail Lin. Ft.
Expressway Items		
Sheet # 28		610
Sheet # 30	720	
Turning Roadways		
Sheet # 31		220
TOTALS	720	830

AS CONSTRUCTED

SHEET NO.	Two Cable Guard Rail Lin. Ft.	Steel Beam Guard Rail Lin. Ft.	EXPLANATION OF CHANGES
Expressway Items			
Sheet # 28		615	
Sheet # 30	0		Deleted by Auth. 1011
Turning Roadways			
Sheet # 31		220	
			Increased by Rec. 38
TOTALS	0	835	

CHANGES or EXTRAS ~~AS PER PLANS~~

STA. TO STA.	Steel Beam Guard Rail Salvaged Mat. Lin. Ft.
Expressway Items	
Sheet # 30	720
	720

AS CONSTRUCTED

STA. TO STA.	Steel Beam Guard Rail Salvaged Mat. Lin. Ft.	EXPLANATION OF CHANGES
Expressway Items		
Sheet # 30	690	
		This extra added by Auth. 2003 (In Conjunction with Auth. 1011)
		Decreased by Rec. # 36
	690	

FENCING I 82251F C16 UN

AS PER PLANS

SHEET NO.	Woven Wire Fence Lin. Rods
Expressway Items	
Sheet # 28	25
TOTALS	25

AS CONSTRUCTED

SHEET NO.	Woven Wire Fence Lin. Rods	EXPLANATION OF CHANGES
Expressway Items		
Sheet # 28	0	
		Deleted by Rec. # 46
TOTALS	0	

REMOVING MASONRY & CONCRETE I 82251F C16 UN

AS PER PLANS

SHEET NO.	Removing Old Pavement Sq. Yds.	Removing Masonry & Concrete Cu. Yds.	Removing Sidewalks Sq. Yds.	Removing Curb & Gutter Lin. Ft.
Removal Items				
Sheet # 15	3,136	15	327	178
Sheet # 16	10,547	15	123	130 ~~90~~
TOTALS	13,683	30	450	308* ~~268~~

AS CONSTRUCTED

SHEET NO.	Removing Old Pavement Sq. Yds.	Removing Masonry & Concrete Cu. Yds.	Removing Sidewalks Sq. Yds.	Removing Curb & Gutter Lin. Ft.	EXPLANATION OF CHANGES
Removal Items					
Sheet # 15	3,053	14	327	195	
Sheet # 16	10,424	52	123	10	
					Decreased by Rec. # 46
					Increased by Rec. # 46
					Decreased by Rec. # 46
TOTALS	13,477	66	450	205	

SODDING I 82251F C16 UN

AS PER PLANS

STATION TO STATION	Class A Sodding Sq. Yds.
Expressway Items (Incl. Ramps)	
584+00 to 595+00	~~4,890~~
595+00 to 605+07.50	~~3,499~~
Turning Roadways	
W'BD to S'BD Turning Roadway	
10+00 to 17+86.57	1,395
Ramps	
Beaubien Exit	
593+80 to 597+61.17	382
Russell Exit	
601+50.39 to 602+60	38
Increased to 5340 by Auth. # 1008	
Increased to 3,649 by Auth. # 1015	
TOTALS	10,204

AS CONSTRUCTED

STATION TO STATION	Class A Sodding Sq. Yds.	EXPLANATION OF CHANGES
Expressway Items (incl. Ramps)		
584+00 to 595+00	5,932	
595+00 to 605+07.50	2,165	
Turning Roadways		
W'Bd. to S'Bd. Turning Roadway		
10+00 to 17+86.57	820	
Ramps		
Beaubien Exit		
593+80 to 597+61.17	256	
Russell Exit		
601+50.39 to 602+60	38	
		Decreased by Rec. # 38
TOTALS	9,211	

MISCELLANEOUS

AS PER PLANS ITEM	QTY.	AS CONSTRUCTED ITEM	QTY.	EXPLANATION OF CHANGES
I 82251F C16 UN				
Removing Trees, 8"-12" Dia.	2 Each	Removing Trees, 8"-12" Dia.	1 each	Decreased by Rec. # 37
Removing Trees, 13"-24" Dia.	1 Each	Removing Trees, 13"-24" Dia.	1 each	
Removing D.S.R. Track Strip	4 Sq. Yds.	Removing D.S.R. Track Strip	13 Sq. Yds.	Increased by Rec. # 46
Fine Grading	10.2 Stas.	Fine Grading	10.2 Stations	
Trimming & Finishing	—	Trimming & Finishing		
Earth Grade	8.3 Stas.	Earth Grade	0	Deleted by Rec. # 38
Fine Grading & Cleanup	17 Stas.	Fine Grading & Cleanup	13.7 Stations	Decreased by Rec. # 38
Calcium Chloride	—	Calcium Chloride	—	
Type 1-Admixed	4.7 Tons	Type 1-Admixed	0	Deleted by Rec. # 37
Water, 1000 Gallon Units	19 Units	Water, 1000 Gallon Units	19 units	
Removing Portions of Existing	—	Removing Portions of Existing	—	
Steel Sheet Piling	Lump Sum	Steel Sheet Piling	100 %	
Maintaining Traffic	Lump Sum	Maintaining Traffic	100 %	
Concrete Noses	3 Each	Concrete Noses	3 each	
Altering the Existing Double	—	Altering the Existing Double	—	
Steel Beam Guard Rail	Lump Sum	Steel Beam Guard Rail	100 %	
Reconstructing the Existing	—	Reconstructing the Existing	—	
Emergency Crossover	Lump Sum	Emergency Crossover	100 %	
Abandoning Existing	—	Abandoning Existing	—	
Hastings Sewer	Lump Sum	Hastings Sewer	100 %	
Timber Curb & Snow Fence	300 Lin. Ft.	Timber Curb & Snow Fence	0	Deleted by Rec. # 38
I 82251F C27 UN				
Rye Seeding	0.1 Acres	Rye Seeding	0	Deleted by Auth. 1019
Class A Seeding	0.5 Acres	Class A Seeding	0	Deleted by Auth. 1019
Mulching	0.9 Tons	Mulching	0	Deleted by Auth. 1019
I 82251F C16 EXTRAS TO PLAN (See Sheet 84)				

PLAN ESTIMATE BY ______ DATE ______ CHECKED BY ______ DATE ______ DATE ______ DATA COMPLETED ______ PROJ. ENG. ______ DATE ______ HISTORY CHECKED ENTERED ON PLANS BY ______ DATE ______

*Revised by Recommendation No. 16

PLANS PREPARED BY CITY OF DETROIT DEPARTMENT OF PUBLIC WORKS CITY ENGINEERING DIVISION BUREAU OF HIGHWAYS AND EXPRESSWAYS

SQUAD LEADER	WICKEY	9/61
DRAFTED	WOLKAN	9/61
TRACED	KARWAS	9/61
CHECKED	Allen E. Pagan	9/61
CORRECT		
RECOMMENDED FOR APPROVAL	R. K. Fickel	9/61

FILE NO. USED STENCIL 82251 F C16

STATE PROJECT	FEDERAL PROJECT	SHEET NO.
82251	I-75-1(45)55	81

QUANTITY SHEET – E

SURFACING (SQ. YDS.) – CURB & GUTTER (LIN. FT.)

B.P.R. DIV. NO.	STATE	PROJ. NO.	FISCAL YEAR	SHEET NO.	TOTAL SHEETS
4	MICH.	I-75-1(43)53			
ROUTE	STATE PROJECT	COUNTY	City	SHEET NO.	TOTAL SHEETS
	82251	Wayne	Detroit	82	

AS PER PLANS

SHEET NO.	STATION TO STATION	Conc. Pavement 10" Unif. Sq. Yds.	Conc. Pavement 8" Unif. Sq. Yds.	Conc. Base Course 9" Unif. Sq. Yds.	Pav't Reinf. Sq. Yds.	Bituminous Conc. Leveling Course Tons	Bituminous Conc. Wearing Course Tons	Bitum. Bond Coat Gals.	Aggregate Shoulder Special Tons	Bitum. Agg. for Shoulders 4.11 Tons	Bitum. Prime Coat MC-0 Gals.	Conc. Curb & Gutter Det. A Lin. Ft.	Conc. Curb & Gutter Det. B Lin. Ft.	Conc. Curb Det. 2A Lin. Ft.	Conc. End Header Det. 20 Lin. Ft.	Pav't Replacement Sq. Yds.	Crushed Limestone Tons	EXPLANATION OF CHANGES
I 82251 F C16 UN																		
	Removal Items																	
Sheet # 15	Sta. 584+00 to Sta. 595+00																	
Sheet # 16	Sta. 595+00 to Sta. 605+07.50															11		
	Expressway Items																	
	Edsel Ford Expressway																	
Sheet # 26	Sta. 584+00 to Sta. 595+00	252		174	426	10	10	35	608	155	638	573	1,520		13		32	
Sheet # 28	Sta. 595+00 to Sta. 605+07.50	4,082		327	4,409	18	18	65	505	129	530	1,030	1,188					
	Turning Roadways																	
Sheet # 31	W'BD. to S'BD. Turning Roadway	1,533			1,533				202	52	212	547	607					
	Ramps																	
Sheet # 32	Beaubien Exit			536	536	30	30	107	83	21	87	164	382		13			
Sheet # 32	Russell Exit			244	244	14	14	49	12	3	13	110	51					
Sheet # 33	Temp. Connection to Russell Exit		~~177~~ 213*											10				
										Increased to 363 by Auth. 1015	Increased to 1,533 by Rec. # 27							
									Increased to 1,419 by Auth. 1015	Increased to 375.8 by Rec. # 27	Decreased to 1,272 by Rec. # 42			Increased to 19 by Auth. 1018		Increased to 22 by Auth. # 1018		
			213*						1,419	375.8	1,272			19		22		
	TOTALS	5,867	~~177~~	1,281	7,148	72	72	256	~~1,410~~	~~360~~	~~1,400~~	2,424	3,748	~~10~~	26	~~11~~	32	

*Revised by Recommendation No. 16

AS CONSTRUCTED

SHEET NO.	STATION TO STATION	Conc. Pavement 10" Unif. Sq. Yds.	Conc. Pavement 8" Unif. Sq. Yds.	Conc. Base Course 9" Unif. Sq. Yds.	Pav't Reinf. Sq. Yds.	Bituminous Conc. Leveling Course Tons	Bituminous Conc. Wearing Course Tons	Bitum. Bond Coat Gals.	Aggregate Shoulder Special Tons	Bitum. Agg. for Shoulders 4.11 Tons	Bitum. Prime Coat MC-0 Gals.	Conc. Curb & Gutter Det. A Lin. Ft.	Conc. Curb & Gutter Det. B Lin. Ft.	Conc. Curb Det. 2A Lin. Ft.	Conc. End Header Det. 20 Lin. Ft.	Pav't Replacement Sq. Yds.	Crushed Limestone Tons	EXPLANATION OF CHANGES
	Removal Items																	
Sheet # 15	Sta. 584+00 to Sta. 595+00																	
Sheet # 16	Sta. 595+00 to Sta. 605+07.50																	
	Expressway Items																	
	Edsel Ford Expressway																	
Sheet # 26	Sta. 584+00 to Sta. 595+00	466.5		162.8	631.3	6	14.80	41.3	384.8	144.2	371	544	1335		13		32	
Sheet # 28	Sta. 595+00 to Sta. 605+07.50	3780.1		320.8	4100.9	10.8	26.00	75.0	616.2	143.2	592	1027	1176					
	Turning Roadways																	
Sheet # 31	W'BD. to S'BD. Turning Roadway	1522.8			1,522.8				189.4	24	89	538	596					
	Ramps																	
Sheet # 32	Beaubien Exit			546.2	546.2	18.0	44.80	123.0	67.6	19	71	159	377		13			
Sheet # 32	Russell Exit			256.9	256.9	6.5	23.24	56.0	14.0	3.7	15	107	40					
Sheet # 33	Temp. Connection to Russell Exit		207.4											10				
				Decreased by Rec. # 42	Decreased by Rec. # 42	Decreased by Rec. # 42	Decreased by Rec. # 42	Decreased by Rec. # 42	Decreased by Rec. # 42	Decreased by Rec. # 42		Decreased by Rec. # 42	Decreased by Rec. # 42					
		Decreased by Rec. # 43	Decreased by Rec. # 43	Increased by Rec. # 43	Decreased by Rec. # 43	Decreased by Rec. # 44	Increased by Rec. # 44	Increased by Rec. # 44	Decreased by Rec. # 42	Decreased by Rec. # 44	Decreased by Rec. # 44	Decreased by Rec. # 43	Decreased by Rec. # 43	Decreased by Rec. # 43				
	TOTALS	5771.4	207.4	1286.7	7058.1	41.3	108.84	295.3	1272	334.1	1138	2315	3524	10	26	22	32	

PLAN ESTIMATE BY ________ DATE ________ CHECKED BY ________ DATE ________ DATA COMPLETED ________ DATE ________ HISTORY CHECKED ENTERED ON PLANS BY ________ DATE ________

FILE NO. 82251 F C16 — STATE PROJECT 82251 — FEDERAL PROJECT I-75-1(43)53 — SHEET NO. 82

PLANS PREPARED BY CITY OF DETROIT DEPARTMENT OF PUBLIC WORKS CITY ENGINEERS OFFICE BUREAU OF HIGHWAYS AND EXPRESSWAYS

SQUAD LEADER	WICKEY	9/61
DESIGNED BY	WOLKAN	9/61
DRAWN BY	WOLKAN	9/61
CHECKED BY	KAWWAS	9/61
CORRECT	Allen E. Rogers	9/61
RECOMMENDED	R. K. Hicks	9/61

QUANTITY SHEET – E

DRAINAGE I 82251 F C16 UN

B.P.R. Div. No.	State	Proj. No.	Fiscal Year	Sheet No.	Total Sheets
4	Mich.	I-75-1(43)53			
Route	**State Project**	**County**	**City**	**Sheet No.**	**Total Sheets**
	82251	Wayne	Detroit	83	

AS PER PLANS / AS CONSTRUCTED

Sheet No.	Station to Station	Removing C.B. Each	Abandoning Inlets Each	Abandoning C.B. Each	Abandoning M.H. Each	Adjusting C.B. Covers Method #1 Each	Reconstructing C.B. Each	Type A Cover Each	Adjusting M.H. Covers Method #1 Each	Catch Basins 6.1' to 14' Deep Each: 3J	3H	6J	6H	3J with Salvaged Cover	3H with Salvaged Cover	6J with Salvaged Cover	6H with Salvaged Cover	12" Tile Traps Each
AS PER PLANS																		
	Removal Items																	
Sheet # 15	Sta. 584+00 to Sta. 595+00		2	10	2													
Sheet # 16	Sta. 595+00 to Sta. 605+07.50	2	1	5	2													
	Expressway Items																	
	Edsel Ford Expressway																	
Sheet # 26	Sta. 584+00 to Sta. 595+00					1	1	1						2	2	3	1	2
Sheet # 28	Sta. 595+00 to Sta. 605+07.50					1	2		1					6	4	3	2	4
	Walter P. Chrysler Expressway																	
Sheet # 30	Sta. 163+71 to Sta. 167+35																	
	Turning Roadways																	
Sheet # 30	E'BD. to N'BD. Turning Roadway									1	1	1	1					2
Sheet # 31	W'BD. to S'BD. Turning Roadway									2	2	1	1					
	Ramps																	
Sheet # 32	Beaubien Exit									1				1		1	1	2
Sheet # 32	Russell Exit										1							1
Sheet # 33	Temp. Connection to Russell Exit *					1*												
	Bank Drains & (Edge Drains & Sewers for Utilities) This Contract																	
	Alterations to City Sewers																	
Sheet # 53																		
	TOTALS	2	3	15	4	~~2~~ 3*	3	1	1	4	4	2	2	9	6	7	4	11
AS CONSTRUCTED																		
	Removal Items																	
Sheet # 15	Sta. 584+00 to Sta. 595+00		2	10	2													
Sheet # 16	Sta. 595+00 to 605+07.50	2	1	5	2													
	Expressway Items																	
	Edsel Ford Expressway																	
Sheet # 26	Sta. 584+00 to Sta. 595+00					1		1						2	2	3	1	2
Sheet # 28	Sta. 595+00 to Sta. 605+07.50					1	2		2					6	4	3	2	4
	Walter P. Chrysler Expressway																	
Sheet # 30	Sta. 163+71 to Sta. 167+35																	
	Turning Roadways																	
Sheet # 30	E'BD. to N'BD. Turning Roadway									1	1	1	1					2
Sheet # 31	W'BD. to S'BD. Turning Roadway									2	2	1	1					
	Ramps																	
Sheet # 32	Beaubien Exit									1				1		1	1	2
Sheet # 32	Russell Exit										1							1
Sheet # 33	Temp. Connection to Russell Exit					1												
	Bank Drains & (Edge Drains & Sewers for Utilities) This Contract																	
	Alterations to City Sewers																	
Sheet # 53																		
	(Changes)						Decreased by Rec. #46		Increased by Rec. #48									
	TOTALS	2	3	15	4	3	2	1	2	4	4	2	2	9	6	7	4	11

Sheet No.	Station to Station	M.H. 1A 6.1' to 14' Deep Each	Special M.H. 1AD, Det D 14.1' to 25' Deep Each	Drop M.H. A 6.1' to 14' Deep Each	M.H. Special Each: 5'0" Dia, Det D 14.1' to 25' Deep	5'-0" Dia., Det D 25.1' Deep or over	Square M.H. with Pressure Cover 6.1' to 14' Deep Each	Special Pressure M.H. Det E 6.1' to 14' Deep Each	6" Edge Drain Lin. Ft.	6" Bank Drain Lin. Ft.	6" Sewer 6.1' to 14' Deep Lin. Ft.	12" Cl. B Culvert Lin. Ft.	12" Sewer Lin. Ft.: 0' to 6' Deep	6.1' to 14' Deep	14.1' to 25' Deep
AS PER PLANS															
	Removal Items														
Sheet # 15	Sta. 584+00 to Sta. 595+00														
Sheet # 16	Sta. 595+00 to Sta. 605+07.50														
	Expressway Items														
	Edsel Ford Expressway														
Sheet # 26	Sta. 584+00 to Sta. 595+00	2							1,150			62	6	152	
Sheet # 28	Sta. 595+00 to Sta. 605+07.50	2		1			1		1,208			395	166	37	
	Walter P. Chrysler Expressway														
Sheet # 30	Sta. 163+71 to Sta. 167+35	3							245			53			
	Turning Roadways														
Sheet # 30	E'BD. to N'BD. Turning Roadway	1		1					172			55	12		
Sheet # 31	W'BD. to S'BD. Turning Roadway								572			92	14	164	40
	Ramps														
Sheet # 32	Beaubien Exit	1		1					414			84	8		
Sheet # 32	Russell Exit	1							147			96	45		
Sheet # 33	Temp. Connection to Russell Exit *														
	Bank Drains & (Edge Drains & Sewers for Utilities) This Contract								50	130	139				
	Alterations to City Sewers														
Sheet # 53			1		1	2		1							
	TOTALS	10	1	3	1	2	1	1	3,958	130	139	837	251	353	40
AS CONSTRUCTED															
	Removal Items														
Sheet # 15	Sta. 584+00 to Sta. 595+00														
Sheet # 16	Sta. 595+00 to 605+07.50														
	Expressway Items														
	Edsel Ford Expressway														
Sheet # 26	Sta. 584+00 to Sta. 595+00	2							1097			56	6	148	
Sheet # 28	Sta. 595+00 to Sta. 605+07.50	2		1			1		1166			381	137	34	
	Walter P. Chrysler Expressway														
Sheet # 30	Sta. 163+71 to Sta. 167+35	1							216			0			
	Turning Roadways														
Sheet # 30	E'BD. to N'BD. Turning Roadway	1		0					148			16	12		
Sheet # 31	W'BD. to S'BD. Turning Roadway								570			90	14	159	40
	Ramps														
Sheet # 32	Beaubien Exit	1		1					403			83	6		
Sheet # 32	Russell Exit	1							147			96	45		
Sheet # 33	Temp. Connection to Russell Exit														
	Bank Drains & (Edge Drains & Sewers for Utilities) This Contract								0	0	0				
	Alterations to City Sewers														
Sheet # 53			1		1	2		1							
	(Changes)	Decreased by Rec. #40		Decreased by Rec. #40					Decreased by Rec. #41	Deleted by Rec. #41	Deleted by Rec. #41	Decreased by Rec. #41	Decreased by Rec. #41	Decreased by Rec. #41	
	TOTALS	8	1	2	1	2	1	1	3747	0	0	722	220	341	40

Sheet No.	Station to Station	12" Sewer C-76-II Enc. 6.1' to 14' Deep Lin. Ft.	15" Cl. B Culvert Lin. Ft.	15" Sewer C-76-II 6.1' to 14' Deep Lin. Ft.	15" Sewer C-76-II Enc. 6.1' to 14' Deep Lin. Ft.	18" Cl. B Culvert Lin. Ft.	18" Sewer 6.1' to 14' Deep Lin. Ft.	18" Sewer 14.1' to 25' Deep Lin. Ft.	21" Sewer 6.1' to 14' Deep Lin. Ft.	21" Sewer C-76-III 6.1' to 14' Deep Lin. Ft.	42" Sewer Conc. C-76-IV Jacked in Place Lin. Ft.	48" Sewer Conc. C-76-IV Jacked in Place Lin. Ft.	48" Sewer Reinf. Conc. Steel Cyl. Pipe AWWA C-300 Jacked in Place Lin. Ft.	48" x 18" Wye Branch Reinf. Conc. Steel Cyl. Pipe AWWA C-300 Lin. Ft.	Sewer Taps Each: 6"	12"	15"	Conc. Grade A Cu. Yds.	Reinf. Steel Lbs.	Explanation of Changes
AS PER PLANS																				
	Removal Items																			
Sheet # 15	Sta. 584+00 to Sta. 595+00																			
Sheet # 16	Sta. 595+00 to Sta. 605+07.50																			
	Expressway Items																			
	Edsel Ford Expressway																			
Sheet # 26	Sta. 584+00 to Sta. 595+00								146	128					2	1				
Sheet # 28	Sta. 595+00 to Sta. 605+07.50	81	100			24									1	7	1			
	Walter P. Chrysler Expressway																			
Sheet # 30	Sta. 163+71 to Sta. 167+35				237		6													
	Turning Roadways																			
Sheet # 30	E'BD. to N'BD. Turning Roadway	160																		
Sheet # 31	W'BD. to S'BD. Turning Roadway														2		1			
	Ramps																			
Sheet # 32	Beaubien Exit			48	105			245												
Sheet # 32	Russell Exit																			
Sheet # 33	Temp. Connection to Russell Exit *																			
	Bank Drains & (Edge Drains & Sewers for Utilities) This Contract																			
	Alterations to City Sewers																			
Sheet # 53								17			252	69	187	8				10	879	
	TOTALS	241	100	48	342	24	6	262	146	128	252	69	187	8	5	8	2	10	879	
AS CONSTRUCTED																				
	Removal Items																			
Sheet # 15	Sta. 584+00 to Sta. 595+00																			
Sheet # 16	Sta. 595+00 to 605+07.50																			
	Expressway Items																			
	Edsel Ford Expressway																			
Sheet # 26	Sta. 584+00 to Sta. 595+00								148	125					2	1				
Sheet # 28	Sta. 595+00 to Sta. 605+07.50	81	100			24									1	6	1			
	Walter P. Chrysler Expressway																			
Sheet # 30	Sta. 163+71 to Sta. 167+35				214		0													
	Turning Roadways																			
Sheet # 30	E'BD. to N'BD. Turning Roadway	148																		
Sheet # 31	W'BD. to S'BD. Turning Roadway														2		1			
	Ramps																			
Sheet # 32	Beaubien Exit			48	105			245												
Sheet # 32	Russell Exit																			
Sheet # 33	Temp. Connection to Russell Exit																			
	Bank Drains & (Edge Drains & Sewers for Utilities) This Contract																			
	Alterations to City Sewers																			
Sheet # 53								24			252	69	187	8				10	879	
	(Changes)	Decreased by Rec. #40			Decreased by Rec. #40		Decreased by Rec. #40	Increased by Rec. #41	Increased by Rec. #41	Decreased by Rec. #41										
	TOTALS	229	100	48	319	24	0	269	148	125	252	69	187	8	5	7	2	10	879	

* Design Recommendation No. 16

PLAN ESTIMATE BY ______ DATE ______ CHECKED BY ______ DATE ______ DATE ______ DATA COMPLETED ______ PROJ. ENG. ______ DATE ______ HISTORY CHECKED ENTERED ON PLANS BY ______ DATE ______

SQUAD LEADER	WICKEY	9/61
DRAWN BY	WOLKAN	9/61
TRACED BY	WOLKAN	9/61
CHECKED BY	COMLY	9/61
CORRECT	Allan E. Boyer (signature)	9/61
RECOMMENDED FOR APPROVAL	R. R. Hicks (signature)	9/61

PLANS PREPARED BY CITY OF DETROIT DEPARTMENT OF PUBLIC WORKS CITY ENGINEERS OFFICE BUREAU OF HIGHWAYS AND EXPRESSWAYS

File No. Use No. 230 Stencil: 82251 F C16 — State Project 82251 — Federal Project I-75-1(43)53 — Sheet No. 83

B.P.R. DIV. NO.	STATE	PROJ. NO.	FISCAL YEAR	SHEET NO.	TOTAL SHEETS
4	MICH.	I-75-1(95)53			
ROUTE	STATE PROJECT	COUNTY	City	SHEET NO.	TOTAL SHEETS
	82251	Wayne	Detroit	84	

QUANTITY SHEET – E

FIRE PROTECTION SYSTEM

I 82251 F C16 UN

AS PER PLANS	QUANT.	UNIT	AS CONSTRUCTED
3" Cast Iron Water Main, Furnished & Placed	73	Lin. Ft.	
4" Cast Iron Water Main, Furnished & Placed	1,987	Lin. Ft.	
4" Gate Valves & Boxes, Furnished & Placed	2	Each	
Sand-Lime Mixture (Compacted in Place)	50	Cu. Yds.	→ Deleted by Auth. # 1004
3" Fire Hydrants, Furnished & Placed	11	Each	
4" Siamese Standpipes, Furnished & Placed	1	Each	
1" Air Valves and Wells, Furnished & Placed	3	Each	
182251F C16 EXTRAS TO PLAN			
Auth. # 2001 Pay for unusable Type A Sign Face Alum. Extrusion			
Auth. # 2002 Replace O.H. St. Light Unit destroyed by vehicle			
Auth. # 2003 Steel beam guard rail (Salvage Material) to replace 2 cable guard			
Auth. # 2004 Replace O.H. St. Light Unit and wiring destroyed by vehicle			
Auth. # 2005 Force Account budget for overtime required to switch expressway traffic on Edsel Ford Expressway and erect signs on Sundays			
Auth. # 2006 Cable splices on median lighting circuit			
Rec. # 49 Balance Force Account Auth. # 2005			

PLANS PREPARED BY
CITY OF DETROIT
DEPARTMENT OF PUBLIC WORKS
CITY ENGINEER'S OFFICE
BUREAU OF HIGHWAYS AND EXPRESSWAYS

DESIGNED BY	MICKEY	9/61
DRAWN BY	WOLKAN	9/61
TRACED BY	WOLKAN	9/61
CHECKED BY	MICKEY	9/61
APPROVED BY	William S. Rogers	9/61
SUPERVISOR	A. A. Kish	9/61

PLAN ESTIMATE BY _____ DATE _____ CHECKED BY _____ DATE _____ DATA COMPLETED _____ PROJ. ENG DATE _____ HISTORY CHECKED ENTERED ON PLANS BY _____ DATE _____

410

FILE NO. USE NO. 350 STENCIL	82251 F C16	STATE PROJECT	FEDERAL PROJECT	SHEET NO.
		82251	I-75-1(95)53	84

QUANTITY SHEET – E

CONSTRUCTION AND RELOCATION OF CITY LIGHTING, POWER, COMMUNICATIONS AND SIGNAL FACILITIES

I 82251F C16 UN

AS PER PLANS — AS CONSTRUCTED

B.P.R. Div. No.	State	Proj. No.	Fiscal Year	Sheet No.	Total Sheets
4	Mich.	I-75-1(43)153			
Route	State Project	County	City	Sheet No.	Total Sheets
	82251	Wayne	Detroit	85	

Item	Revised	Quant.	Unit	As Construct.	Remarks
Removing Wood Poles		23	Each	22	Decreased by Rec. #45
Removing Post Foundations		16	Each	16	
Removing Overhead Street Lighting Units		21	Each	20	Decreased by Rec. #45
Removing 1-#6 Overhead Lines		1,400	Lin. Ft.	1400	
Removing 2-#6 Overhead Lines		1,370	Lin. Ft.	1370	
Street Type "D" Handholes	1 (18)	~~4~~	Each	1	Decreased by Auth. #1013
1-4" Encased Conduit	63 (18)	~~70~~	Lin. Ft.	75	Decreased by Auth. #1013 Increased by Rec. #45
2-4" Encased Conduit		90	Lin. Ft.	94	Increased by Rec. #45
Salvaging Underground Street Lighting Units		16	Each	16	
U.G. Anchor Base Fluorescent Street Lighting Units - Furnish & Install on New Foundation		34	Each	34	
U.G. Anchor Base Fluorescent Street Lighting Units - Furnish & Install on Bridge		3	Each	3	
U.G. Anchor Base Double Arm Fluorescent Street Lighting Units - Furnish & Install on New Foundation		12	Each	12	
U.G. Anchor Base Double Arm Fluorescent Street Lighting Units - Furnish & Install on Bridge		2	Each	2	
U.G. Anchor Base Fluorescent Street Lighting Units Without Luminaire - Furnish & Install on New Foundation		5	Each	5	
U.G. Anchor Base Fluorescent Street Lighting Units Without Luminaire - Furnish & Install on Bridge		10	Each	10	
600 V, 1-1/c #2 Parkway Cable and 1-#2 Neoprene Wire - Furnish & Install		545	Lin. Ft.	642	Increased by Rec. #45
600 V, 2-1/c #2 Parkway Cables and 1-#2 Neoprene Wire - Furnish & Install		645	Lin. Ft.	765	Increased by Rec. #45
600 V, 3-1/c #2 Parkway Cables and 1-#2 Neoprene Wire - Furnish & Install	6460 (18)	~~6,340~~	Lin. Ft.	6594	Increased by Rec. #45
600 V, 6-1/c #2 Parkway Cables and 1-#2 Neoprene Wire - Furnish & Install		50	Lin. Ft.	54	Increased by Rec. #45
600 V, 3-1/c #2 Lead Covered Cables - Furnish & Install		32	Lin. Ft.	44	Increased by Rec. #45
600 V, 3-1/c #2 Lead Covered Cables and 1-#2 Neoprene Wire - Furnish & Install		370	Lin. Ft.	378	Increased by Rec. #45
600 V, 1-1/c #2 Lead Covered Cable and 1-1/c #2 Parkway Cable - Furnish & Install		120	Lin. Ft.	151	Increased by Rec. #45
7500 V, 1-1/c #8 Street Lighting Parkway Cable - Furnish & Install		460	Lin. Ft.	522	Increased by Rec. #45
7500 V, 1-1/c #8 Lead Covered Street Lighting Cable - Furnish & Install		360	Lin. Ft.	388	Increased by Rec. #45
O.H. Street Lighting Units (Form-94) Less Coils & Bracket Arms - Furnish & Install		6	Each	6	
35' Wood Pole - Furnish & Install		3	Each	2	Decreased by Rec. #45
Install Salvaged Wood Pole		1	Each	5	
Relocate Overhead Street Lighting Unit Less Coil		1	Each	1	
Install Salvaged F-94 Street Lighting Unit and & 10' Bracket Arm		1	Each	1	
Span Wire Double Flasher Signals - Furnish & Install, Later Remove		Lump	Sum	100%	
Pedestal Type Double Flasher Signals - Furnish & Install, Later Remove		Lump	Sum	100%	
Removing Flasher Signal Heads only		6	Each	6	
Install Salvaged Flasher Signal Heads only		6	Each	6	
Fit Up Wood Pole as 1/c Street Lighting Cable Pole		1	Each	1	
Fit Up Existing Underground Street Lighting Standard as Temporary Cable Pole		2	Each	2	
Barricade Lighting Installation	(18)	Lump	Sum	100%	

(18) REVISED BY RECOMMENDATION No 18

PLANS PREPARED BY CITY OF DETROIT DEPARTMENT OF PUBLIC WORKS CITY ENGINEERS OFFICE BUREAU OF HIGHWAYS AND EXPRESSWAYS

WICKEY 9/61
WOLKAN 9/61
WOLKAN 9/61
KAWWAS 9/61
Allen E. Rogers 9/61
R. A. Hicks 9/61

PLAN ESTIMATE BY ______ DATE ______ CHECKED BY ______ DATE ______ DATE ______ DATA COMPLETED ______ PROJ. ENG. ______ DATE ______ HISTORY CHECKED ENTERED ON PLANS BY ______ DATE ______

File No. 82251 F C16 — State Project 82251 — Federal Project I-75-1(43)153 — Sheet No. 85

PLANS PREPARED BY
CITY OF DETROIT
DEPARTMENT OF PUBLIC WORKS
CITY ENGINEER'S OFFICE
BUREAU OF HIGHWAYS AND EXPRESSWAYS

B.P.R. DIV. NO.	STATE	PROJ. NO.	FISCAL YEAR	SHEET NO.	TOTAL SHEETS
4	MICH.	F-251(103)C55			
ROUTE	STATE PROJECT	COUNTY	City	SHEET NO.	TOTAL SHEETS
	82251	Wayne	Detroit	401	

B.P.R. DIV. NO.	STATE	PROJ. NO.	FISCAL YEAR	SHEET NO.	TOTAL SHEETS
4	MICH.				
ROUTE	STATE PROJECT	COUNTY		SHEET NO.	TOTAL SHEETS

9/61	WICKEY	
2/62	WICKEY	
2/62	WICKEY	
2/62	Allen E. Pagan	
9/61	A.H. Wickey	

BEFORE CONSTRUCTION

STAGE I

CONSTRUCTION - STAGE I

Remove the Hastings Pedestrian Bridge.
Construct Bridges S 28, S 27, and S 29.
Construct portions of Bridges S 25 and S 30.
Construct alterations to the Edsel Ford Expressway.
Construct portions of the W'BD. to S'BD Turning Roadway and the Russell Exit Ramp.
Complete construction of the Beaubien Exit Ramp.

Note:
For Stage II and Stage III See Sh.# 402.
All Signs shall be Mounted to Provide a Minimum Clearance of 15'-0" from Bottom of Sign to Top of Roadbed.

LEGEND
- New Signs
- Existing Signs
- New Pavement
- New Shoulder
- Timber Curb & Snow Fence
- Barricade

PLAN OF CONSTRUCTION SEQUENCE FOR TRAFFIC SIGNS

FILE NO.	STATE PROJECT	FEDERAL PROJECT	SHEET NO.
82251 F C16	82251	F-251(103)C55	401

PLANS PREPARED BY
CITY OF DETROIT
DEPARTMENT OF PUBLIC WORKS
CITY ENGINEERS OFFICE
BUREAU OF HIGHWAYS AND EXPRESSWAYS

SQUAD LEADER	WICKEY	9/61
DRAWN BY	WICKEY	9/61
TRACED BY	WALSH	9/61
CHECKED BY	WICKEY	9/61
CORRECT	Edward E. Pagen	9/61
RECOMMENDED FOR APPROVAL	A.H. Beadle	9/61

A.P.I. DIV. NO.	STATE	PROJ. NO.	FISCAL YEAR	SHEET NO.	TOTAL SHEETS
4	MICH.	I75-1(43)53			
ROUTE	STATE PROJECT	COUNTY	City	SHEET NO.	TOTAL SHEETS
	82251	Wayne	Detroit	402	

A.P.R. DIV. NO.	STATE	PROJ. NO	FISCAL YEAR	SHEET NO.	TOTAL SHEETS
4	MICH.				
ROUTE	STATE PROJECT	COUNTY		SHEET NO.	TOTAL SHEETS

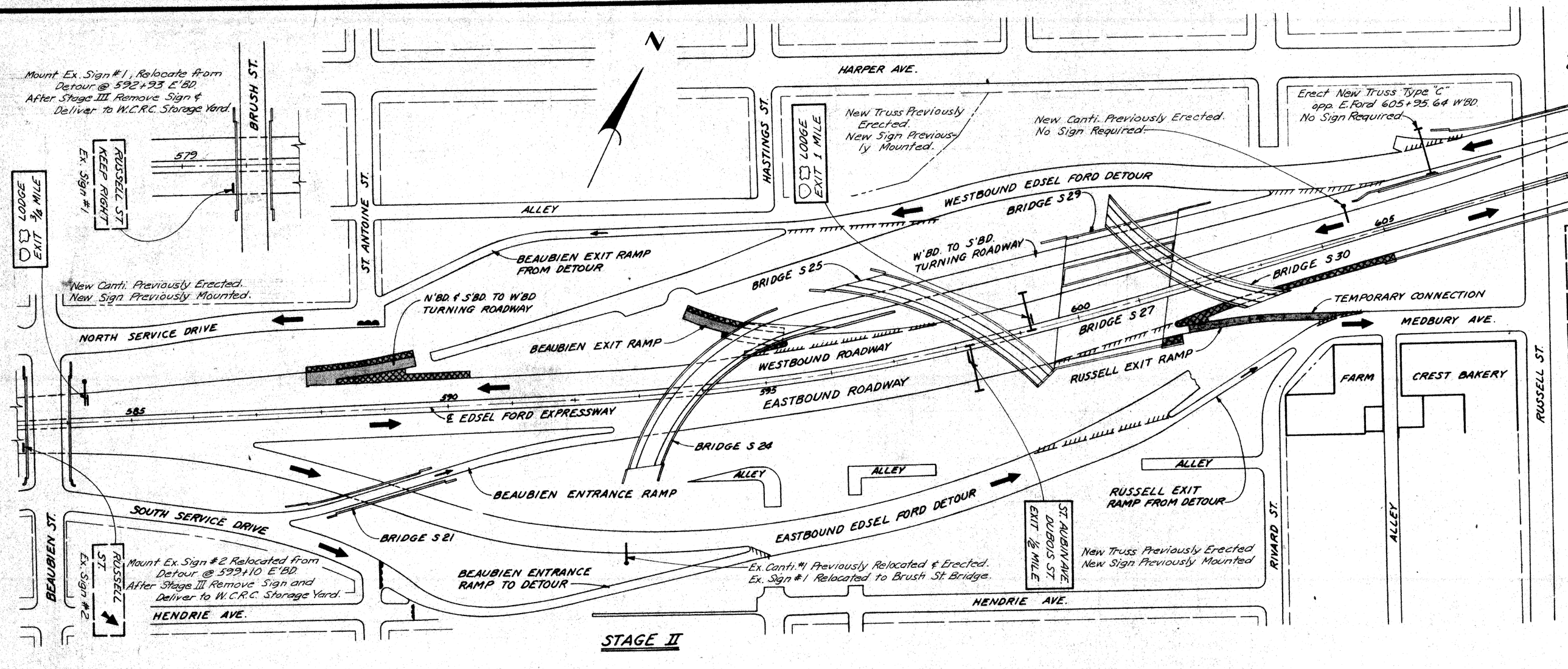

STAGE II

CONSTRUCTION - STAGE II

Remove portions of the Eastbound and Westbound Detours.
Construct alterations to the Edsel Ford Expressway.
Construct portions of the Beaubien Exit Ramp and the N'BD. & S'BD. to W'BD. Turning Roadway.
Construct a portion of the Russell Exit Ramp and construct the Temporary Russell Connection.

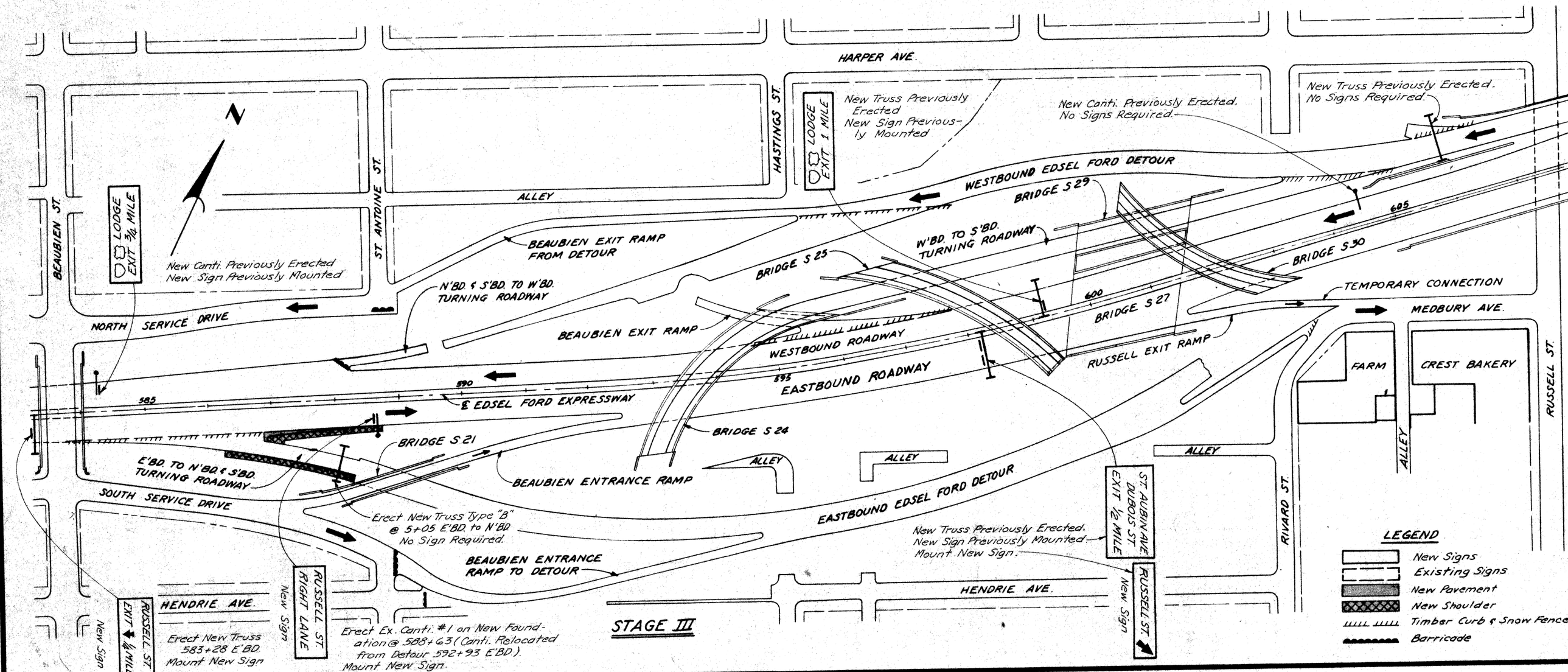

STAGE III

CONSTRUCTION STAGE III

Complete alterations to the Edsel Ford Expressway.
Construct a portion of the E'BD. to S'BD. Turning Roadway.

For New Signs @ 558+50 E'BD. & 570+90 E'BD. Installed This Contract See Sh.# 403.

Notes:

For Stage I See Sh.# 401.

All Signs shall be Mounted to Provide a Minimum Clearance of 15'-0" from Bottom of Sign to Top of Roadbed.

LEGEND

- New Signs
- Existing Signs
- New Pavement
- New Shoulder
- Timber Curb & Snow Fence
- Barricade

PLAN OF CONSTRUCTION SEQUENCE FOR TRAFFIC SIGNS

FILE NO.	STATE PROJECT	FEDERAL PROJECT	SHEET NO.
82251 F C16	82251	I-75-1(43)53	402

NOTE:
ALL SIGN SUPPORTING STRUCTURES SHOWN HEREON SHALL BE ERECTED TO PROVIDE FOR BOTTOM HEIGHT OF SIGNS AT 15'-0" MIN. ABOVE ROADBED.

44' PAVEMENT
TYPE C TRUSS - SPAN 70'
ON W.BD. TO N.BD. & E.BD
OPPOSITE E. FORD 605+95.64WB
127'
FUTURE SIGN
20'x9'
18'-0"
℄ TRUSS
Bot. of Base ℓ
652.91

TYPE D
CANTILEVER
620+97WB
FUTURE SIGN
16'x7'
Bot. of Base ℓ
652.91

59'-4" PAVEMENT - SPAN 73'-6"
SPECIAL TYPE C TRUSS
611+43.27 WB
Bot. of Base ℓ
652.91
3'-6"
10'-8"
26'x9'
20'x5'
12'x9'
FUTURE SIGNS
℄ TRUSS
18'-4"
1'
16'
15'
St Aubin Ave
Dubois St
EXIT ½ MILE
18'x8.5'
Russell St
16'x4'
25'
18'
BASE ELEV. ABOVE MEDIAN = 0.79
48' PAVEMENT
TYPE B TRUSS SPAN = 70'
598+19 EB
15'
1'
18'-6"
17'-0"

FUTURE SIGN
(10) Woodward Ave
Brush St
EXIT 1/4 MILE
℄ 12'x7.5
BASE ELEV. 162.79
TYPE D
CANTILEVER
604+30WB
℄ TRUSS

℄ MEDIAN
15'
14'
1'
20'
8'
Russell St
EXIT 1/4 MILE
14'x6.5
℄ 20'x5'
FUTURE SIGN
℄ TRUSS
18'-6"
14'-0"
BASE ELEV. ABOVE MEDIAN = 0.37'
36' PAVEMENT
17'
7'
TYPE B TRUSS - SPAN = 60'
583+28 EB

℄ MEDIAN
17'
36' PAVEMENT
TYPE C TRUSS - SPAN = 60'
599+74 WB
7'
18'-0"
BASE ELEV. ABOVE MEDIAN = 0.25
(22'x7.5)
EXIT ¾ MILE
Lodge Fwy
(10) Woodward Ave
Brush St
℄ 12'x7.5
FUTURE SIGN
9'
26'
1'
18'
2'
℄ TRUSS
18'-0"

TYPE D
CANTILEVER
584+25 WB
BASE ELEV. 137.09
(22'x7.5)
EXIT ¾ MILE
Lodge Fwy

NOTE:
UNLESS NOTED OR SHOWN, ALL OTHER DETAILS OF FOUNDATION ARE IDENTICAL WITH STANDARD FOUNDATION FOR TYPE "C"

℄ MEDIAN
2'-6"
TOP OF FOUNDATION 131.18
127.6
INVERT OF EX. 24" SEWER 124.6 ±
123.6
4'-0"
4'-6"
SPECIAL FOUNDATION AT 558+50 EB

℄ TRUSS
15'-6"
20'x9'
FUTURE SIGN
BASE ELEV. = 137.52
11'
24' PAVEMENT
15'
TYPE B TRUSS - SPAN = 50'
5+05 E.B. N.S.

14'x6'
Russell St
RIGHT LANE
USE EXIST. CANTILEVER RELOCATED FROM 587+00EB
588+63 EB
BASE ELEV. 138.50
VERIFY EXIST. BOLT CIRCLE

℄ MEDIAN
16'
1'
26'
(10) Woodward Ave
John R St
℄ 26'x7.5
℄ TRUSS
FUTURE SIGN
16'x7.5
18'-0"
13'-6"
BASE ELEV. ABOVE MEDIAN = 0.25'
36'
17'
7'
TYPE C TRUSS - SPAN = 60'
558+50 EB
SEE DETAIL OF FOUNDATION SHOWN ABOVE

FREEWAY
570
16'x7'
FUTURE SIGN
TYPE D
CANTILEVER
570+90 EB
BASE ELEV. 139.36
560
FORD

ROUTE	STATE PROJECT	COUNTY		SHEET NO.	TOTAL SHEETS
	MICH.				
D.P.M. DIV. NO.	STATE	PROJ. NO.	FISCAL YEAR	SHEET NO.	TOTAL SHEETS
4	MICH.	I-75-1(053)53			
ROUTE	STATE PROJECT	COUNTY	C.Y.N.	SHEET NO.	TOTAL SHEETS
	82251	Wayne	Detroit	403	
D.P.M. DIV. NO.	STATE	PROJ. NO.	FISCAL YEAR	SHEET NO.	TOTAL SHEETS
4	MICH.				

B.P.R. DIV. NO.	STATE	PROJ. NO.	FISCAL YEAR	SHEET NO.	TOTAL SHEETS
4	MICH.	I-75-1(43)53			
ROUTE	STATE PROJECT	COUNTY	CITY	SHEET NO.	TOTAL SHEETS
	82251	Wayne	Detroit	404	

QUANTITY

SIGN	STATION	SIZE	SPEC. PLAN NO.	NO. OF SIGNS
NONE REQUIRED	FORD - 604+50WB			
(SPUR I-96) Lodge Fwy EXIT 1 MILE	FORD - 599+24 WB	18 × 7.5	SB-3-117	1
(SPUR I-96) Lodge Fwy EXIT 3/4 MILE	FORD - 584+25 WB	18 × 7.5	SB-3-117	1
Russell St EXIT 1/4 MILE	FORD - 583+28 EB	14 × 6.5	SB-3-81 (SIMILAR)	1
Russell St RIGHT LANE	FORD - 588+63EB	14 × 6	SB-3-124	1
St Aubin Ave Dubois St EXIT 1/2 MILE	FORD - 598+19 EB	18 × 8.5	SB-3-118	1
Russell St ↗	FORD - 598+19 EB	16 × 4	SB-3-100	1
(10) Woodward Ave ↗ John R St	FORD - 558+50EB	26 × 7.5	SB-3-101 SB-3-117	1
NONE REQUIRED	FORD - 570+90 EB	—	—	—
NONE REQUIRED	E → N&S 5+05	—	—	—
NONE REQUIRED	FORD - 620+97 WB	—	—	—
NONE REQUIRED	FORD - 611+43.27 WB	—	—	—
NONE REQUIRED	WB→NB&SB OPP. FORD - 605+95.64 WB	—	—	—
TOTAL - THIS SHEET				
TOTAL - THIS CONTRACT				

SUPPORT TYPE — OVERHEAD TRUSS

STATION	TYPE A (EA.) SPAN (FT.)	TYPE A END SUPPORT HEIGHT LEFT	TYPE A END SUPPORT HEIGHT RIGHT	TYPE A CONC. BASE	TYPE B (EA) SPAN (FT.) 50'	TYPE B SPAN 60'	TYPE B SPAN 70'	TYPE B END SUPPORT HEIGHT LEFT	TYPE B END SUPPORT HEIGHT RIGHT	TYPE B CONC. BASE	TYPE C (EA) SPAN (FT.) 60'	TYPE C SPAN 70'	TYPE C SPAN 73'6"	TYPE C END SUPPORT HEIGHT LEFT	TYPE C END SUPPORT HEIGHT RIGHT	TYPE C CONC. BASE	Remarks
FORD - 604+50WB																	
FORD - 599+24 WB											1			18'0"	18'0"	2	ALTER & REPLACE EXISTING 6" EDGE DRAIN AT MEDIAN - INCIDENTAL TO CONC. BASE
FORD - 584+25 WB																	
FORD - 583+28 EB						1		18'6"	14'0"	2							
FORD - 588+63EB																	
FORD - 598+19 EB							1	18'6"	14'0"	2							ALTER & REPLACE EXISTING 6" EDGE DRAIN AT MEDIAN - INCIDENTAL TO CONC. BASE
FORD - 598+19 EB							—			—							
FORD - 558+50EB											1			18'0"	13'6"	2	SPECIAL CONC BASE REQUIRED AT MEDIAN SEE SH# 403
FORD - 570+90 EB																	
E → N&S 5+05					1			15'6"	15'6"	2							
FORD - 620+97 WB																	
FORD - 611+43.27 WB													1	19'6"	18'4"	—	SPECIAL BASES - SEE BRIDGE SH# 353
WB→NB&SB OPP. FORD - 605+95.64 WB												1		18'0"	18'0"	—	SPECIAL BASES PROVIDED UNDER PRIOR CONTRACT - SEE BRIDGE SH# 353
TOTAL - THIS SHEET																	
TOTAL - THIS CONTRACT					1	1	1			6	2	1	1			4	

REQUIRED FOR TEMPORARY SIGNS

TYPE B CONC. BASE	CANTILEVER CONC. BASE	STEEL BEAM GUARD RAIL
EA.	EA.	LIN.FT.
4	1	123
TOTAL - THIS CONTRACT: 4	1	123

CANTILEVER (EA.) / ROADSIDE (EA.) / DELINEATOR AND POST (EA.) / STEEL BEAM GUARD RAIL / POST LENGTH (LIN. FT.)

STATION	CANT. TYPE A	CANT. TYPE B	CANT. TYPE C	CANT. TYPE D	CANT. CONC. BASE	Remarks	8 WF 24	10 WF 33	10 WF 49	TYPE A CONC. BASE	TYPE B CONC. BASE	SINGLE CRYSTAL	DOUBLE YELLOW	TRIPLE YELLOW	STEEL BEAM GUARD RAIL (LIN. FT.)	2# POST	3# POST	3# DBL. POST	3" ϕ PIPE	4" ϕ PIPE
FORD - 604+50WB				1	1										–					
FORD - 599+24 WB															41					
															–					
FORD - 584+25 WB				1	1										41					
FORD - 583+28 EB															41					
FORD - 588+63EB					1	USE EXIST. CANTIL. RELOCATED FROM STA 587+00 EB									41					
FORD - 598+19 EB															–					
FORD - 598+19 EB															–					
FORD - 558+50EB															41					
FORD - 570+90 EB				1	1										41					
E → N&S 5+05															82					
FORD - 620+97 WB				1	–	SPECIAL BASE SEE BRIDGE SH# 353									–					
FORD - 611+43.27 WB															–					
WB→NB&SB OPP. FORD - 605+95.64 WB															–					
TOTAL - THIS SHEET																				
TOTAL - THIS CONTRACT				4	4										328					

Extras to Plans
Auth. #2001 pay for Unusable Type A Sign Face Alum. Extrusion

SIGN FACE AREA (SQ. FT.)

STATION	TYPE A ALUMINUM EXTRUSION	TYPE A PLYWOOD	TYPE A ALUMINUM SHEET	TYPE B ALUMINUM EXTRUSION	TYPE B PLYWOOD	TYPE B ALUMINUM SHEET	TYPE C PLYWOOD	TYPE C ALUMINUM SHEET	TYPE D PLYWOOD	TYPE D ALUMINUM SHEET
FORD - 604+50WB	–									
FORD - 599+24 WB	135									
	–									
FORD - 584+25 WB	135									
FORD - 583+28 EB	91									
FORD - 588+63EB	84									
FORD - 598+19 EB	153									
FORD - 598+19 EB	64									
FORD - 558+50EB	195									
FORD - 570+90 EB										
E → N&S 5+05										
FORD - 620+97 WB										
FORD - 611+43.27 WB										
WB→NB&SB OPP. FORD - 605+95.64 WB										
TOTAL - THIS SHEET										
TOTAL - THIS CONTRACT	857									

Decreased by Auth. 1005
Increased by Rec. #45

As Constructed — As Plan
Relocating Existing Traffic Signs 100% ✓ — 100%

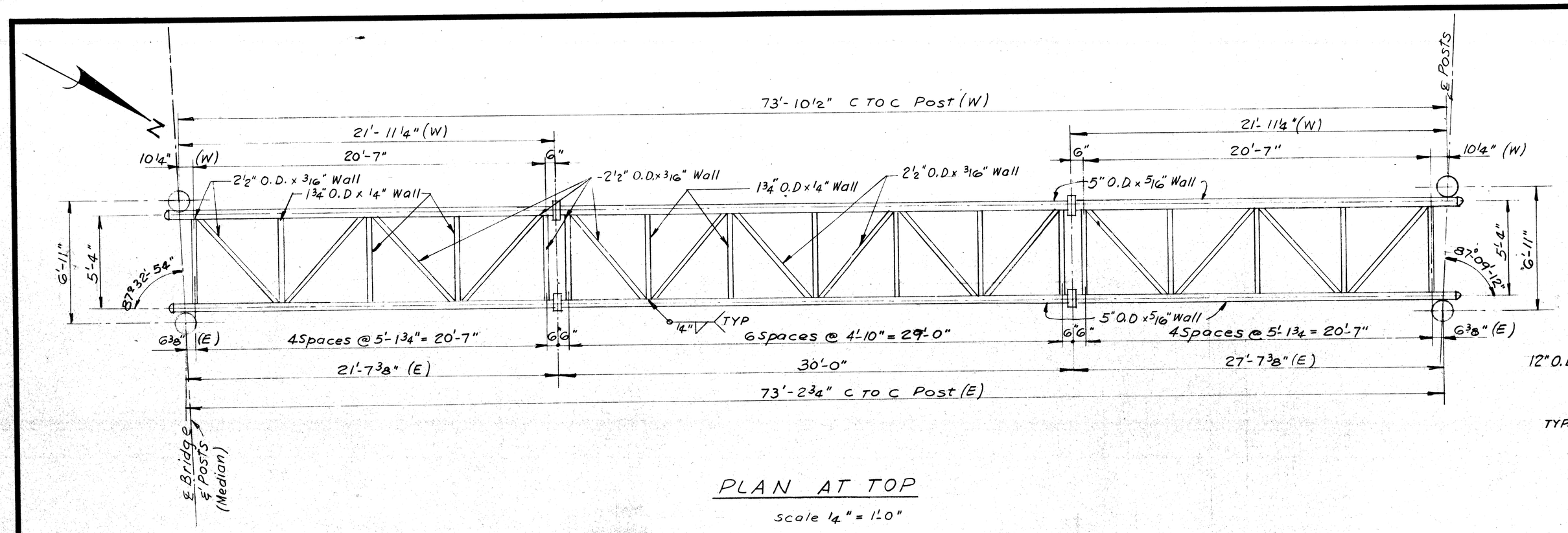

PLAN AT TOP

scale ¼" = 1'-0"

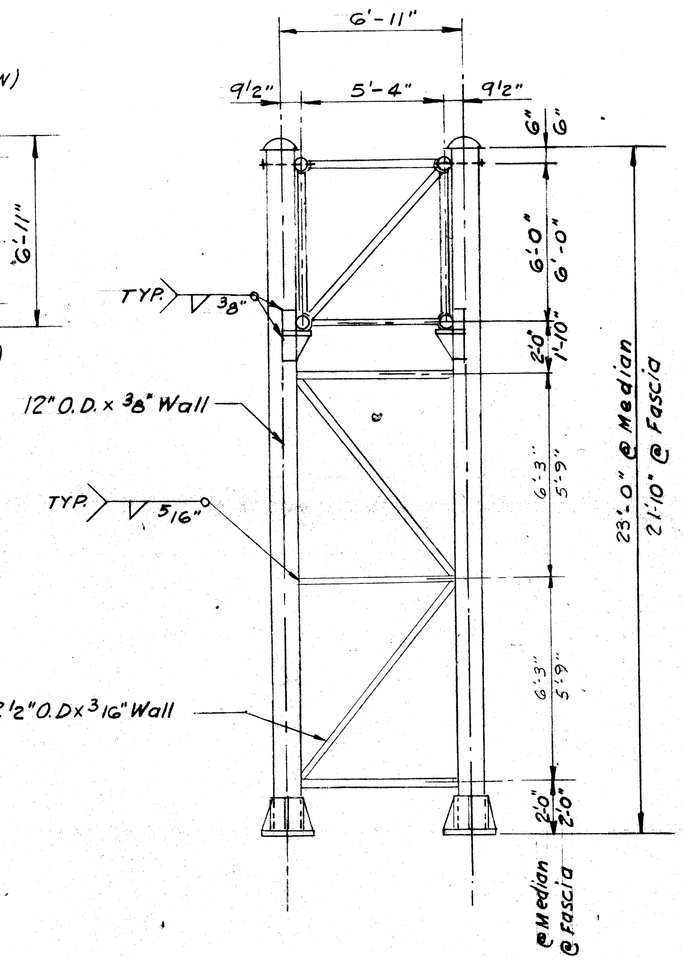

END VIEW

scale ¼" = 1'-0"

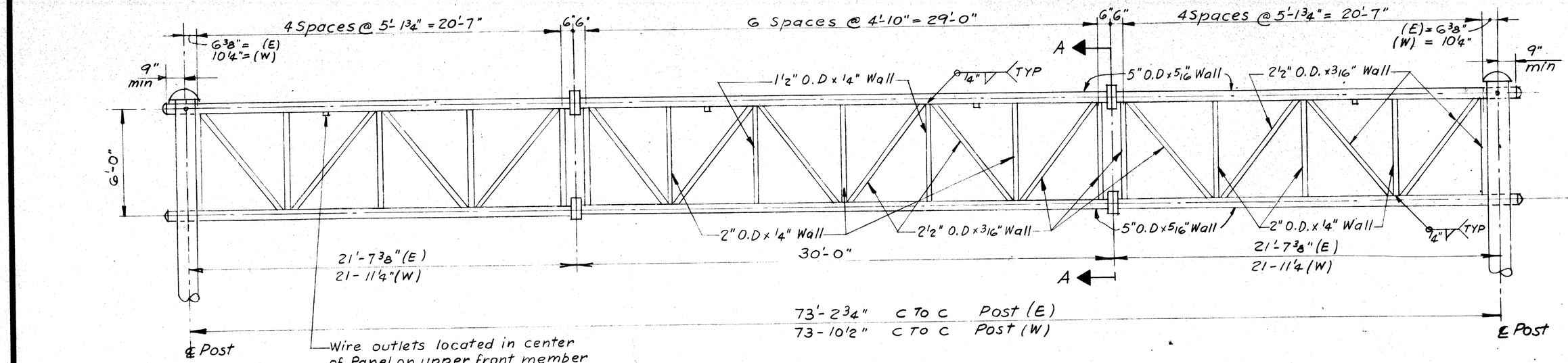

ELEVATION (Looking West)

scale ¼" = 1'-0"

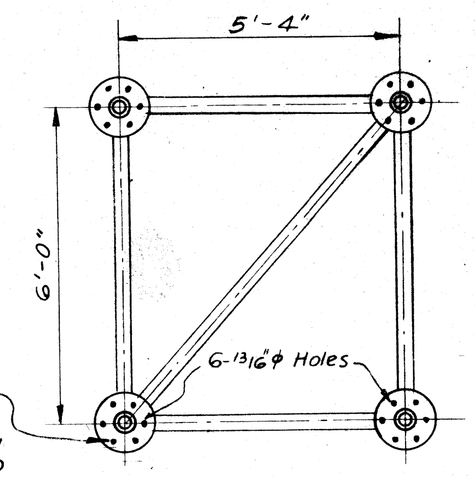

¾" x 5" Hex. Hd. bolts 2024-T4 Al Alloy
Flat Washers 2024-T4 Al Alloy
¾" Elastic stop nut GBNE-120 or equiv.
1⅛" Spot Face

SECTION A-A

scale ¼" = 1'-0"

Notes:
All work in connection with materials, fabrication and erection of Aluminum Signs, shall be in conformance to the M.S.H.D. Supplemental Specifications for Highway Traffic Signs.

Material: Alum. Alloy 6061-T6 Except where noted.
Specifications: Specifications for Structures of Alum. Alloy 6061-T6.
Weight of Box Truss = 50# Per lin. ft.
Sign Area = 480 sq. ft. max.
All welds shall be Consumable Electrode Type using Alum. Alloy 4043 as Filler material

For Details not shown see M.S.H.D Std. Sh S.F. 66 for 70'&80' Alum. Overhead Sign Support Structure Type "C".

Work this sheet with Sheets No. 355, 356, 357

CONTROL SECTION 82024 B

PLANS PREPARED BY
CITY OF DETROIT
DEPARTMENT OF PUBLIC WORKS
CITY ENGINEERS OFFICE
BUREAU OF HIGHWAYS AND EXPRESSWAYS

CORRECT _____ Sr. Assoc. Bridge Engr.
RECOMMENDED FOR APPROVAL _____ Sr. Assoc. Engr. – Expwy. Design

JOB No. PW 897B(5)

MICHIGAN STATE HIGHWAY DEPARTMENT

CHRYSLER-FORD INTERCHANGE
TURNING ROADWAY ADDITIONS TO DEQUINDRE YARD BRIDGE
FOR THE WALTER P. CHRYSLER EXPRESSWAY IN DETROIT

SIGN SUPPORT DETAILS

CITY OF DETROIT

SQUAD LEADER	L.S. Lloyd	3-27-61
DRAWN BY	A. FREIBERG	3-21-61
TRACED BY	A. FREIBERG	3-21-61
CHECKED BY	E.T.	3-29-61

SHEET 405 W

REVISIONS

NO.	DESCRIPTION	DATE	BY

82251 F C16

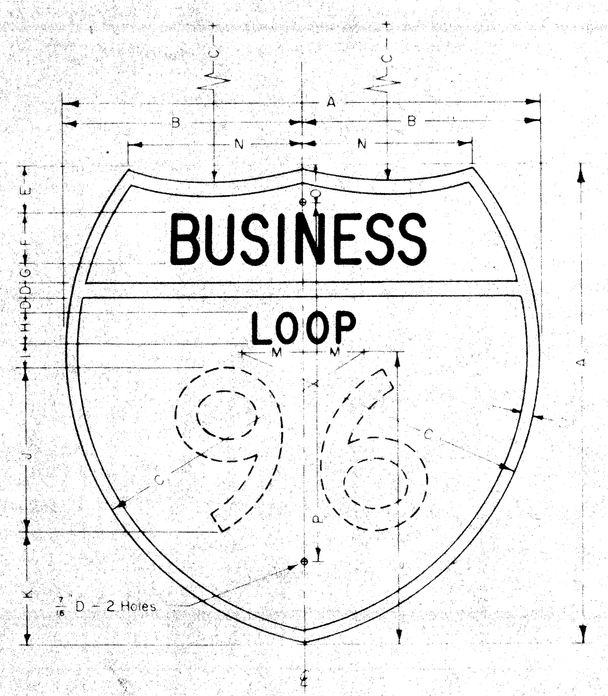

(Alternate second line)

SPUR

SHIELD SIZE	A	B	C	D	E	F	G	H	I	J	K	L	M	N	O	P
18"	18"	9"	11 1/4"	9/16	2 25/32	1 1/2	3/4	1 1/2	15/16	6"	4 5/16	10 15/16	2 1/4	6 3/4	1 1/2	15"
24"	24"	12"	15"	3/4	2 3/8	2 1/2	1"	1 1/2	1 3/8	8"	5 3/4	4 3/8	3"	8 3/4	1 7/8	18"
36"	36"	18"	22 1/2"	1 1/8	3 5/8	3 1/2	1 1/2	2 1/4	2 1/16	12"	8 5/8	21 15/16	4 1/2	3 5/8	3 1/16	27"
48"	48"	24"	30"	1 1/2	4 3/4	5"	2"	3"	2 3/4	16"	11 1/2	29 1/4	6"	17 1/2	—	—
30"	30"	15"	18 3/4"	1 5/16	2 30/32	3 1/8	1 1/4	1 7/8	1 23/32	10"	7 3/16	18 9/32	3 3/4	10 15/16	2 5/32	24"
42"	42"	21"	26 1/4"	1 3/16	4 5/32	4 3/8	1 3/4	2 5/8	2 13/32	14"	10 1/16	25 13/32	5 1/4"	15 5/16	3 21/32	33"

DETAIL OF SIGN

Scale 3/16" = 1"

SPECIFICATIONS

Size — Variable — 0.08" Aluminum or Equivalent
Legend — First line - Variable - Series "C" letters
Second line - Variable - Series "D" letters
Third line - Variable - Series "D" numerals
Michigan State Highway Department Standard alphabet
Color — Face - Silver letters, numerals, and border on a green background
Back - unpainted
Reflectorization — Standard specifications 7.26 (1) 2 silver and green

All materials and workmanship shall comply with M.S.H.D. current specifications

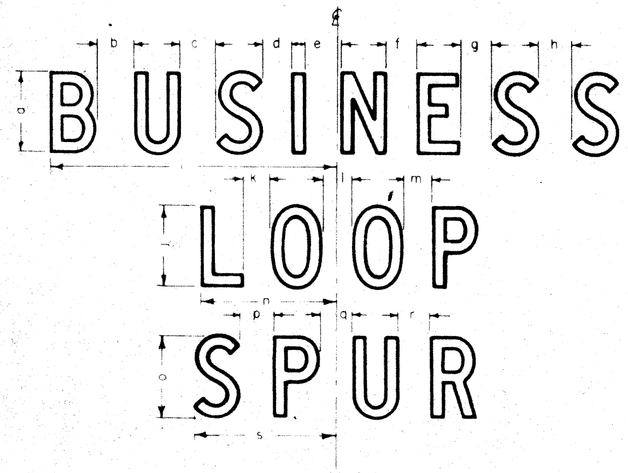

SHIELD SIZE	a	b	c	d	e	f	g	h	i	j	k	l	m	n	o	p	q	r	s
18"	7/8	3/4	9/16	9/16	3/4	3/4	7/16	3/8	5 5/8	1/4	3/8	3/8	7/16	2"	1/4	7/16	5/16	5/16	1/2
24"	2 1/2	1"	13/16	3/4	1"	1"	5/8	1/2	7 1/2	1/2	1/2	1/2	5/8	2 13/16	1 1/2	5/8	3/8	3/8	2 1/2
36"	3 3/4	1 1/2	1"	1"	1 1/2"	1 1/2"	7/8	3/4	11 1/4	2 1/4	3/4	3/4	1"	4 1/2"	2 1/4"	3/4	1/2	1/2	3 3/4
48"	5"	2"	1 1/4"	1 1/2"	2"	2"	1"	1"	15"	3"	1"	1"	1 1/4"	5 5/8"	3"	1"	3/4	3/4	5 1/2
30"	3 3/8	1 1/4"	1"	1"	1 1/4"	1 1/4"	3/4"	5/8"	9 3/8"	7/8"	5/16"	5/16"	11/16"	3 1/2"	7/8"	5/16"	2"	5/16"	3 3/8"
42"	4 3/8"	1 3/4"	1"	1"	1"	1"	7/8"	7/16"	13 1/8"	2 5/8"	7/16"	7/16"	14 1/16"	2 5/8"	1 1/16"	7/16"	3/4"	1 1/16"	9 5/16"

DETAIL OF LETTER SPACING

Scale: none

OFF - INTERSTATE BUSINESS ROUTE MARKER	
AUTH. NO.	DRAWN BY —
REVISIONS	DATE 1-9-59
	SCALE
SHEET NO. 1 OF 2	FILE NO. SB-3-65

DETAIL OF LETTER SPACING	
AUTH. NO.	DRAWN BY —
REVISIONS	DATE 1-9-59
	SCALE NONE
SHEET NO. 2 OF 2	FILE NO. SB-3-65

OFFICES OF ENGINEERING, CONSTRUCTION, MAINTENANCE

APPROVED _____ CONSTRUCTION ENGINEER — 10-26-59 DATE
APPROVED _____ MAINTENANCE ENGINEER — 10-19-59 DATE
APPROVED _____ CHIEF ENGINEER — 10-26-59 DATE

STATE HIGHWAY DEPARTMENT APPROVAL

APPROVED **JOHN C. MACKIE**, STATE HIGHWAY COMMISSIONER
BY _____ DIRECTOR OF ENGINEERING — 10-21-59 DATE

APPROVED BY BUREAU OF PUBLIC ROADS — DATE

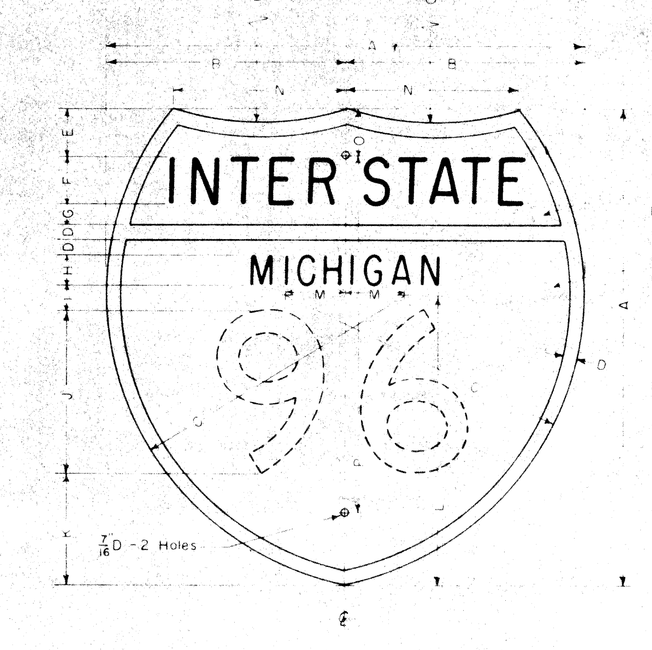

Red Background
Blue Background

SHIELD SIZE	a	b	c	d	e	f	g	h	i	j	k	l	m	n	o	p	q	r	s	t
18"	7/8	3/4	9/16	9/16	3/4	3/4	7/16	3/8	5 5/8	1/4	3/8	3/8	7/16	2"	1/4	7/16	5/16	5/16	1/2	4"
24"	2 1/2	1"	13/16	3/4	1"	1"	5/8	1/2	7 1/2	1/2	1/2	1/2	5/8	2 13/16	1 1/2	5/8	3/8	3/8	2 1/2	5 5/16
36"	3 3/4	1 1/2	1"	1"	1 1/2"	1 1/2"	7/8	3/4	11 1/4	2 1/4	3/4	3/4	1"	4 1/2"	2 1/4"	3/4	1/2	1/2	3 3/4	8"
48"	5"	2"	1 1/4"	1 1/2"	2"	2"	1"	1"	15"	3"	1"	1"	1 1/4"	5 5/8"	3"	1"	3/4	3/4	5 1/2	10 5/8"
30"	3 3/8	1 1/4"	1"	1"	1 1/4"	1 1/4"	3/4"	5/8"	9 3/8"	7/8"	5/16"	5/16"	11/16"	3 1/2"	7/8"	5/16"	2"	5/16"	3 3/8"	6 5/8"
42"	4 3/8"	1 3/4"	1"	1"	1"	1"	7/8"	7/16"	13 1/8"	2 5/8"	7/16"	7/16"	14 1/16"	2 5/8"	1 1/16"	7/16"	3/4"	1 1/16"	9 5/16"	9 5/16"

SPECIFICATIONS

Size Variable — 0.08" Aluminum or Equivalent
Legend First line Variable - Series "C" letters
Second line Variable - Series "D" letters
Third line Variable - Series "D" numerals
Michigan State Highway Department standard alphabet
Color Face - silver letters, numerals and border on a interstate Red and interstate Blue background
Back - Unpainted
Reflectorization Interstate red transparent and interstate blue transparent screened on standard specifications 7.26 (h) 2 silver face

All material and workmanship shall comply with Michigan State Highway Department current specifications

SHIELD SIZE	A	B	C	D	E	F	G	H	I	J	K	L	M	N	O	P
18"	18"	9"	11 1/4"	9/16	2 25/32	1 1/2	3/4	1 1/2	15/16	6"	4 5/16	10 15/16	2 1/4	6 3/4	1 1/2	15"
24"	24"	12"	15"	3/4	2 3/8	2 1/2	1"	1 1/2	1 3/8	8"	5 3/4	4 3/8	3"	8 3/4	1 7/8	18"
36"	36"	18"	22 1/2"	1 1/8	3 5/8	3 1/2	1 1/2	2 1/4	2 1/16	12"	8 5/8	21 15/16	4 1/2	3 5/8	3 1/16	27"
48"	48"	24"	30"	1 1/2	4 3/4	5"	2"	3"	2 3/4	16"	11 1/2	29 1/4	6"	17 1/2	—	—
30"	30"	15"	18 3/4"	1 5/16	2 30/32	3 1/8	1 1/4	1 7/8	1 23/32	10"	7 3/16	18 9/32	3 3/4	10 15/16	2 5/32	24"
42"	42"	21"	26 1/4"	1 3/16	4 5/32	4 3/8	1 3/4	2 5/8	2 13/32	14"	10 1/16	25 13/32	5 1/4"	15 5/16	3 21/32	33"

DETAIL OF SIGN

Scale 3/16" = 1"

DETAIL OF LETTER SPACING

Scale: none

INTERSTATE ROUTE MARKER	
AUTH. NO.	DRAWN BY E.D.-W.W.
REVISIONS	DATE 10-23-58
	SCALE AS SHOWN
SHEET NO. 1 OF 1	FILE NO. SB-3-5

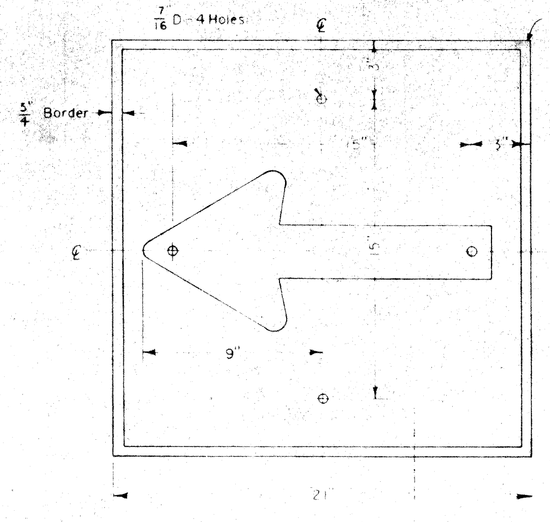

DETAIL OF SIGN

Scale 1/8" = 1"

SPECIFICATIONS

Size 21" x 21" - 0.08" Aluminum or equivalent
Legend 2 3/4 Stroke width arrow
Color Face - Silver arrow and border on an interstate blue background
Back - Unpainted
Reflectorization Interstate blue transparent screened on standard specification 7.26 (h) 2 silver reflectorized face

All material and workmanship shall comply with M.S.H.D. current specifications

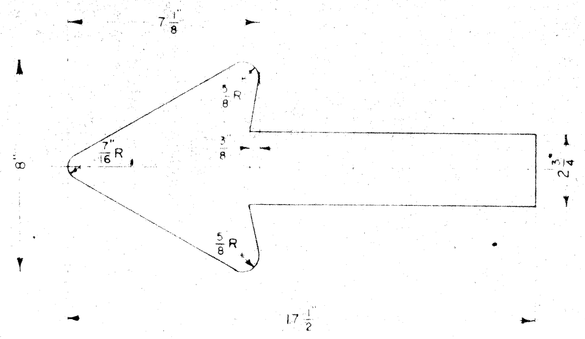

DETAIL OF ARROW

Scale 1/4" = 1"

INTERSTATE ROUTE DIRECTIONAL ARROW 21" x 21"	
AUTH. NO.	DRAWN BY W.B.
REVISIONS 1/11/61	DATE 11-5-58
	SCALE AS SHOWN
SHEET NO. 1 OF 1	FILE NO. SB-3-19

MICHIGAN STATE HIGHWAY DEPARTMENT

STANDARD PLANS FOR HIGHWAY SIGNS AND SUPPORTS

DESIGN AND TRAFFIC DIVISIONS

CHECKED _____ ENGINEER OF TRAFFIC OPERATIONS — 10-14-59 DATE
RECOMMENDED FOR APPROVAL _____ ENGINEER OF BRIDGE AND ROAD DESIGN — 10-23-59 DATE
RECOMMENDED FOR APPROVAL _____ DIRECTOR OF TRAFFIC DIVISION — 10-15-59 DATE

SS-19 | FILE NO. USE NO. 1350 STENCIL | 82251 F C16 | STATE PROJECT 82251 | FEDERAL PROJECT 175(163)53 | SHEET NO. 406

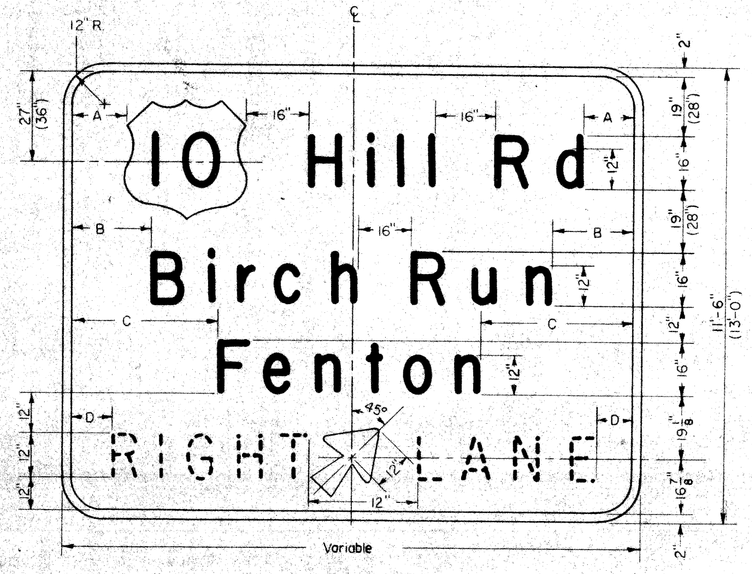

DETAIL OF SIGN

Scale: none

Note:

Dimensions "A" shall be variable (16" min.) but approximately equal.
Dimensions "B" shall be variable (16" min.) but approximately equal.
Dimensions "C" shall be variable (16" min.) but approximately equal.
Dimensions "D" shall be variable (12" min.) but approximately equal.

Spacing between letters shall be in accordance with letter spacing charts prepared by the Traffic Division.

SPECIFICATIONS

Size: Variable - Aluminum extruded planks.

Legend: First line - 16" upper case and 12" loop height lower case letters with a No.36 route marker (see plans SB-36, SB-3-5 or SB-3-65 for construction details) *.
Second and Third lines - 16" Series "E" upper case and 12" loop height lower case letters.
Fourth line - 12" Series "E" letters or No.16 expressway type arrow. (see plan No. SB-64.) Bureau of Public Roads standard alphabet.

Color: Face - Letters, numerals and border - silver, clear or white.
Arrows - silver.
Route markers - variable.
Background - green.
Back: Unpainted.

Reflectorization: Standard specifications:
Background, route markers (with enclosed legend) and arrows - 7.26(h)2.
Letters, numerals and border - (1.) 7.26(h)2 or
(2.) 7.26(i)1 or
(3.) 7.26(i)2.

All material and workmanship shall comply with M.S.H.D. current specifications.

* Where cardinal direction is specified on the plans in place of road name, use 15" Series "E" capital letters and center vertically with route marker.

Notes:

If business route overlay is to be placed on sign, dimensions shall be changed as shown in parentheses and all route marker overlays shall be No.36.
A No.36 route marker with "BUSINESS" overlay (see plan No. SB-3-109) shall be centered as one unit on the horizontal centerline shown through the route marker location.

Use legend "RIGHT LANE" (or LEFT) in place of arrow for bottom line only where specified in plans.

INTERSTATE EXIT GUIDE SIGN WITH ROUTE MARKER & ROAD NAME OR CARDINAL DIRECTION	AUTH. NO.		DRAWN R.R.
	CONT. SEC.		DATE 2-23-61
	REF.		SCALE NONE
	SHEET 1 OF 2	PLAN SB-3-123	

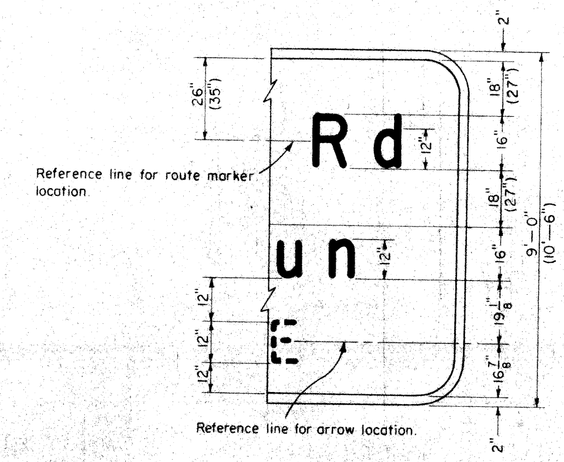

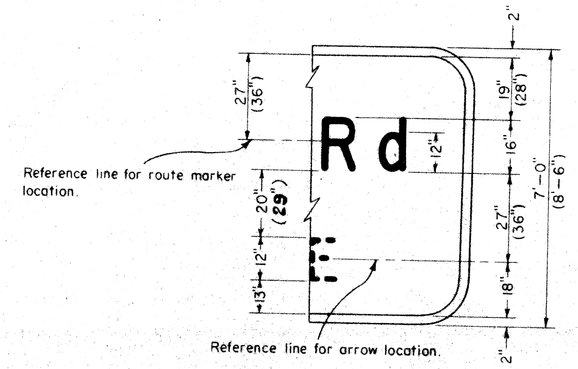

INTERSTATE EXIT GUIDE SIGN WITH ROUTE MARKER & ROAD NAME OR CARDINAL DIRECTION	AUTH. NO.		DRAWN R.R.
	CONT. SEC.		DATE 2-24-61
	REF.		SCALE NONE
	SHEET 2 OF 2	PLAN SB-3-123	

OFFICES OF ENGINEERING, CONSTRUCTION, MAINTENANCE

APPROVED _____ CONSTRUCTION ENGINEER _____ DATE _____

APPROVED _____ MAINTENANCE ENGINEER _____ DATE _____

APPROVED _____ CHIEF OF DESIGN _____ DATE _____

STATE HIGHWAY DEPARTMENT APPROVAL

APPROVED JOHN C. MACKIE, STATE HIGHWAY COMMISSIONER

BY _____ DIRECTOR OF ENGINEERING & CHIEF ENGINEER _____ DATE _____

APPROVED BY BUREAU OF PUBLIC ROADS _____ DATE _____

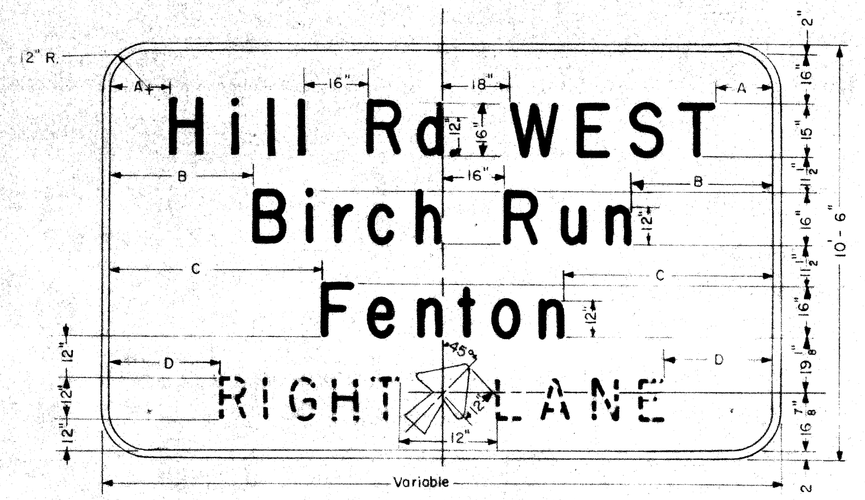

DETAIL OF SIGN

Scale None

NOTE:

Dimensions "A" shall be variable (16" min.) but approximately equal.
Dimensions "B" shall be variable (16" min.) but approximately equal.
Dimensions "C" shall be variable (16" min.) but approximately equal.
Dimensions "D" shall be variable (12" min.) but approximately equal.

Spacing between letters shall be in accordance with letter spacing charts prepared by the Traffic Division.

Use legend "RIGHT LANE" (or LEFT) in place of arrow for bottom line only where specified in plans.

SPECIFICATIONS

Size: Variable — Aluminum extruded planks.

Legend: First line - 16" Series "E" uppercase and 12" loop height lower case and 15" Series "E" capital letters.
Second & Third lines - 16" Series "E" upper case and 12" loop height lower case letters.
Fourth line - 12" Series "E" letters or No. 16 expressway type arrow. (See plan no. SB-64) Bureau of Public Roads standard alphabet.

Color: Face: Letters and border - silver, clear or white.
Arrows - silver.
Routemarkers - variable.
Background - green
Back: Unpainted.

Reflectorization: Standard Specifications:
Background and arrow - 7.26 (h)2.
Letters and border - (1.) 7.26 (h) 2 or
(2.) 7.26 (i) 1 or
(3.) 7.26 (i) 2.

All material and workmanship shall comply with M.S.H.D. current specifications.

INTERSTATE EXIT GUIDE SIGN WITH ROAD NAME AND CARDINAL DIRECTION	AUTH. NO.		DRAWN WJE
	CONT. SEC.		DATE 2-24-61
	REF.		SCALE NONE
	SHEET 1 OF 2	PLAN SB-3-124	

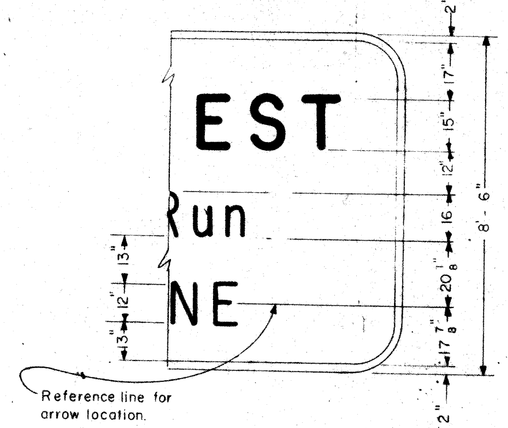

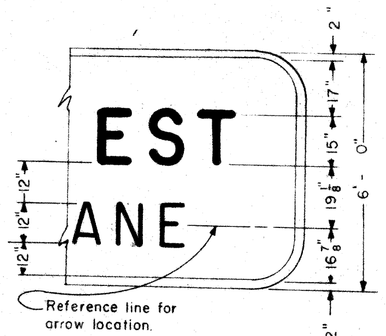

INTERSTATE EXIT GUIDE SIGN WITH ROAD NAME AND CARDINAL DIRECTION	AUTH. NO.		DRAWN WJE
	CONT. SEC.		DATE 2-24-61
	REF.		SCALE NONE
	SHEET 2 OF 2	PLAN SB-3-124	

MICHIGAN STATE HIGHWAY DEPARTMENT

STANDARD PLANS FOR

HIGHWAY SIGNS AND SUPPORTS

DESIGN AND TRAFFIC DIVISIONS

CHECKED _____ ENGINEER OF TRAFFIC OPERATIONS _____ DATE _____

RECOMMENDED FOR APPROVAL _____ ENGINEER OF BRIDGE AND ROAD DESIGN _____ DATE _____

RECOMMENDED FOR APPROVAL _____ DIRECTOR OF TRAFFIC DIVISION _____ DATE _____

SS-28

FILE NO USE NO. 330 STENCIL	STATE PROJECT	FEDERAL PROJECT	SHEET NO.
82251 F C16	82251	175-1(69)153	407

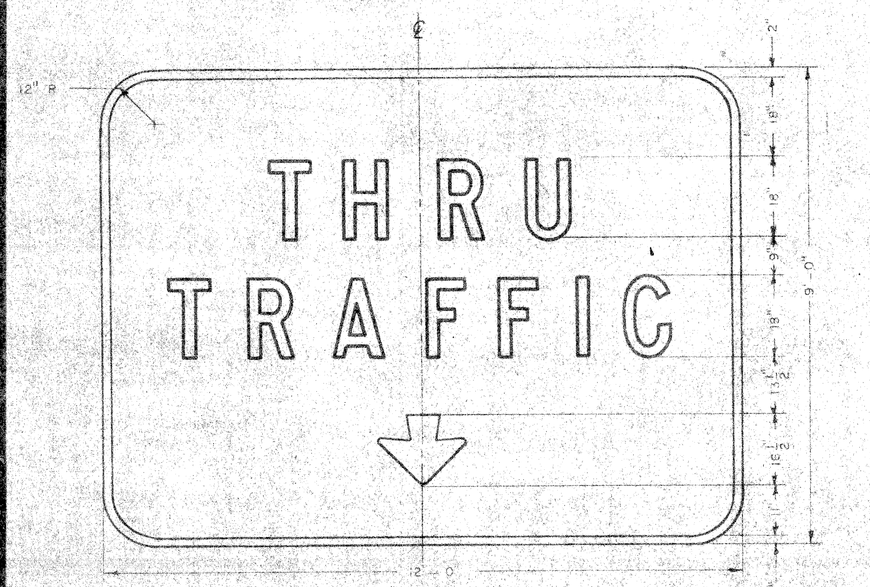

DETAIL OF SIGN
Scale: None

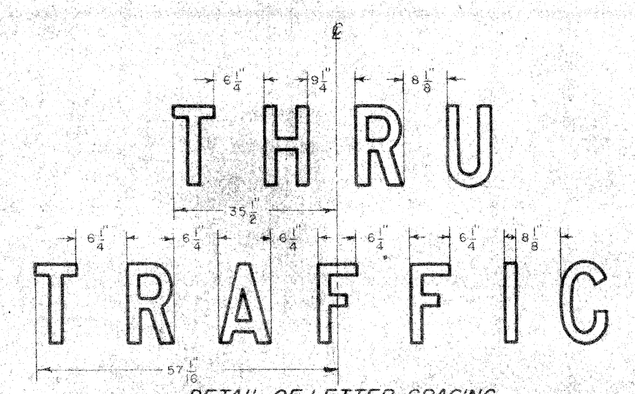

DETAIL OF LETTER SPACING
Scale: None

SPECIFICATIONS

Size: 12'-0" X 9'-0" — Aluminum extruded planks.
Legend: 18" Series "D" letters — M.S.H.D. standard alphabet
See plan SB-3-64 for arrow construction details.
Color: Face: Letters, numerals and border - silver, clear or white
Arrows - silver
Route Markers - variable
Background - green
Back: Unpainted
Reflectorization: Standard Specifications.
Background, route markers (with enclosed legend) and arrows - 7.26 (h) 2
Letters, numerals and border - 1. 7.26 (h) 2 or
2. 7.26 (i) 1 or
3. 7.26 (i) 2

All material and workmanship shall comply with M.S.H.D. current specifications.

INTERSTATE OVERHEAD "THRU TRAFFIC" 12'-0" X 9'-0"	AUTH. NO.	DRAWN R. H.
	CONT. SEC.	DATE 2-10-59
	REF.	SCALE As shown
	SHEET 1 OF 1	PLAN SB-3-60

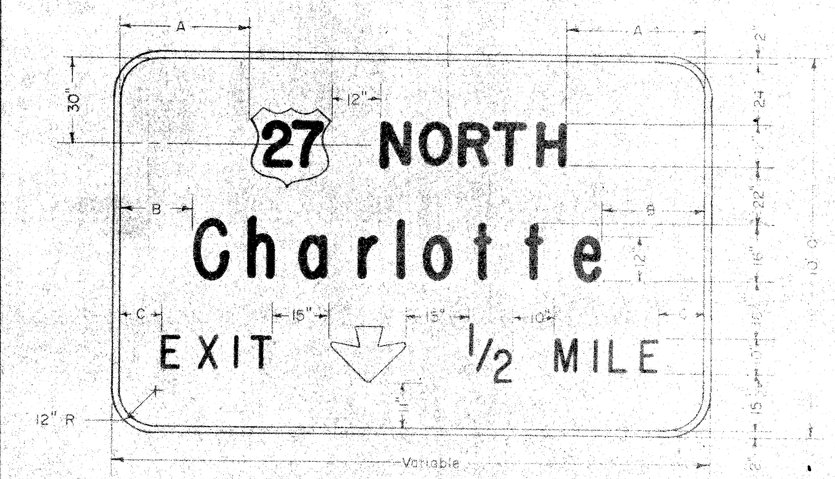

DETAIL OF SIGN
Scale: None

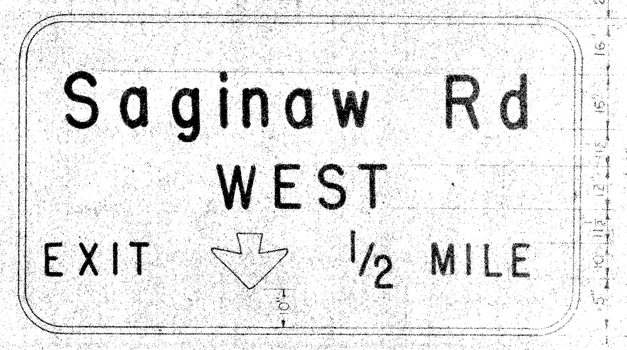

ALTERNATE LAYOUT
WITHOUT ROUTE MARKER

SPECIFICATIONS

Size: Variable - Aluminum extruded planks.
Legend: First line - No. 36 route marker (See plans SB-36, SB-3-5 or SB-3-65 for construction details) and 15" Series "E" letters.
Second line - 16" Series "E" upper case with 12" loop height lower case letters.
Third line - 10" Series "E" letters and fractional numerals Bureau of Public Roads standard alphabet. See plan No. SB-3-63 for detail of fractional designation placement. See plan No. SB-3-64 for detail of arrow.
Color: Face: Letters, numerals & border - silver, clear or white.
Arrows - silver.
Route Markers - variable.
Background - green.
Back: Unpainted.
Reflectorization: Standard Specifications.
Background, route markers (with enclosed legend) & arrows - 7.26(h)2
Letters, numerals & border - 1. 7.26(h)2 or
2. 7.26(i) 1 or
3. 7.26(i) 2

All material and workmanship shall comply with M.S.H.D. current specifications.

NOTE

Dimension "A" shall be variable (16" min.) but approximately equal.
Dimension "B" shall be variable (12" min) but approximately equal.
Dimension "C" shall be variable (10" min.) but approximately equal.
Spacing between letters shall be in accordance with letter spacing charts prepared by the Traffic Division.

Rev. 3-7-61
Rev. 1-26-61

INTERSTATE OVERHEAD ADVANCE EXIT GUIDE SIGN	AUTH. NO.	DRAWN R.H.
	CONT. SEC.	DATE 5-12-59
	REF.	SCALE None
	SHEET 1 OF 1	PLAN SB-3-61

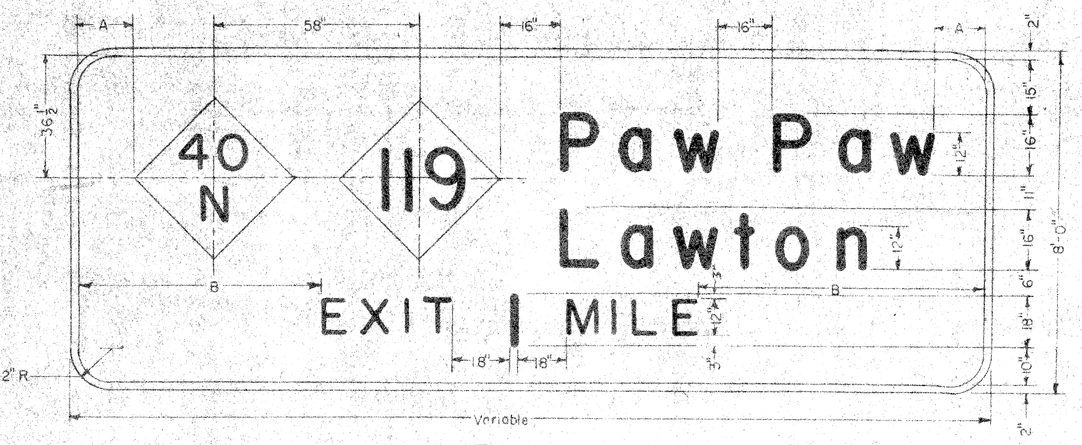

Notes:
Dimensions "A" shall be variable (16" min.) but approximately equal.
Dimensions "B" shall be variable (12" min.) but approximately equal.
Spacing between letters shall be in accordance with letter spacing charts prepared by the Traffic Division.

DETAIL OF SIGN
Scale None

SPECIFICATIONS

Size: 8'-0" x variable — Aluminum extruded planks.
Legend: First and Second lines — 16" Series "E" upper case and 12" loop height lower case letters.
Third line — 12" Series "E" letters and 18" Series "E" numeral
Bureau of Public Roads standard alphabet
No. 42 route markers (see plans SB-36, SB-3-5 or SB-3-65 for construction details).
See plan No. SB-3-63 for detail of fractional designation placement.
Color: Face: Letters, numerals and border - silver, clear or white
Arrows - silver
Route Markers - variable
Background - green
Back: Unpainted
Reflectorization: Standard Specifications.
Background, route markers (with enclosed legend) and arrows - 7.26 (h)2.
Letters, numerals and border - 1. 7.26 (h)2 or
2. 7.26 (i) 1 or
3. 7.26 (i) 2

All materials and workmanship shall comply with M.S.H.D. current specifications.

Rev. 1-7-60

INTERSTATE OVERHEAD ADVANCE EXIT GUIDE SIGN	AUTH. NO.	DRAWN T.J.M.
	CONT. SEC.	DATE 5-8-59
	REF.	SCALE NONE
	SHEET 1 OF 1	PLAN SB-3-87

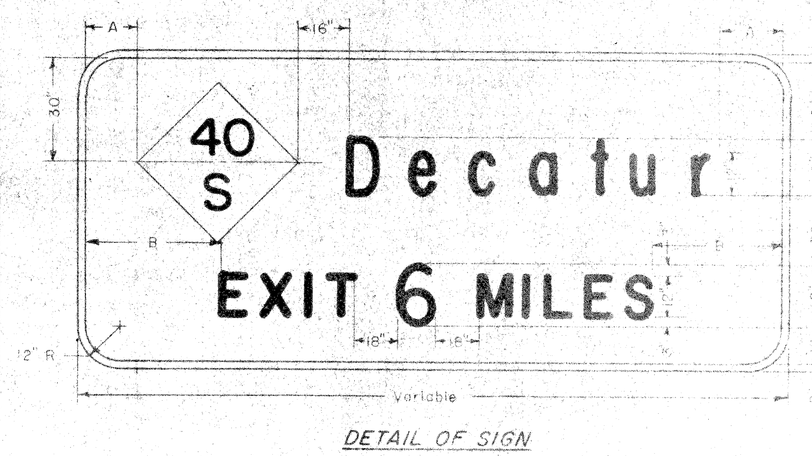

DETAIL OF SIGN
Scale: None

Note: Dimensions "A" shall be variable (16" min.) but approximately equal.
Dimensions "B" shall be variable (12" min.) but approximately equal.
Spacing between letters shall be in accordance with letter spacing charts prepared by the Traffic Division.

SPECIFICATIONS

Size: 7'-6" x variable Aluminum extruded planks.
Legend: First line - 16" Series "E" upper case and 12" loop height lower case letters.
Second line - 12" Series "E" letters and 18" Series "E" numerals
Bureau of Public Roads standard alphabet.
No. 42 route marker see plans SB-36, SB-3-5, or SB-3-65 for construction details. See plan No. SB-3-63 for detail of fractional designation placement.
Color: Face: Letters, numerals and border - silver, clear or white
Arrows - Silver
Route Markers - variable
Background - green
Back: Unpainted
Reflectorization: Standard Specifications
Background, route markers (with enclosed legend) and arrows - 7.26 (h)2
Letters, numerals and border - 1. 7.26 (h)2 or
2. 7.26 (i) 1 or
3. 7.26 (i) 2

All materials and workmanship shall comply with M.S.H.D. current specifications.

Rev. 1-7-60

INTERSTATE OVERHEAD ADVANCE EXIT GUIDE	AUTH. NO.	DRAWN R.H.
	CONT. SEC.	DATE 5-8-59
	REF.	SCALE None
	SHEET 1 OF 1	PLAN SB-3-88

OFFICES OF ENGINEERING, CONSTRUCTION, MAINTENANCE

APPROVED _____ CONSTRUCTION ENGINEER _____ DATE

APPROVED _____ MAINTENANCE ENGINEER _____ DATE

APPROVED _____ CHIEF OF DESIGN _____ DATE

STATE HIGHWAY DEPARTMENT APPROVAL

APPROVED JOHN C. MACKIE, STATE HIGHWAY COMMISSIONER

BY _____ DIRECTOR OF ENGINEERING & CHIEF ENGINEER _____ DATE

APPROVED BY BUREAU OF PUBLIC ROADS _____ DATE

MICHIGAN STATE HIGHWAY DEPARTMENT

STANDARD PLANS FOR

HIGHWAY SIGNS AND SUPPORTS

DESIGN AND TRAFFIC DIVISIONS

CHECKED _____ ENGINEER OF TRAFFIC OPERATIONS _____ DATE

RECOMMENDED FOR APPROVAL _____ ENGINEER OF BRIDGE AND ROAD DESIGN _____ DATE

RECOMMENDED FOR APPROVAL _____ DIRECTOR OF TRAFFIC DIVISION _____ DATE

SS-34

82251 F C16 82251 I75-1(93)53 408

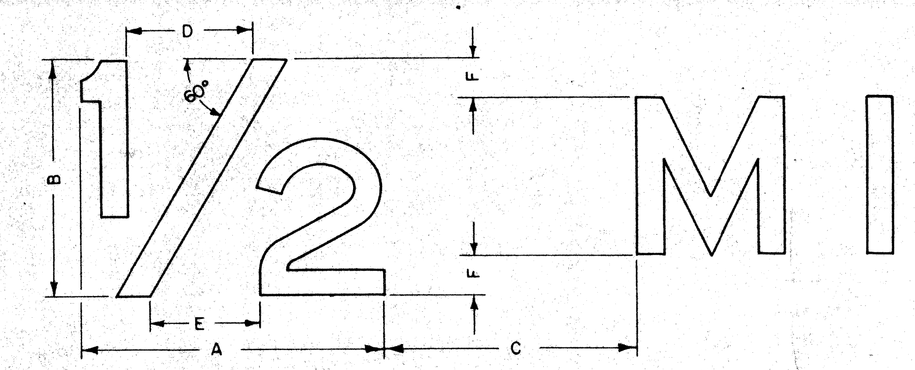

Legend & Numeral Ht.	A	B	C	D	E	F
8"	14 3/4	12	8	6 3/8	5 1/8	2
10"	18 3/4	15	10	8	6 1/4	2 1/2
12"	22 3/4	18	12	9 1/2	8 1/4	3

NOTE: Numerals in fractional designation shall be Series "E" with diagonal width equal to numeral stroke width.

MICHIGAN
STATE HIGHWAY DEPARTMENT
JOHN C. MACKIE
STATE HIGHWAY COMMISSIONER

TRAFFIC DIVISION

FRACTIONAL DESIGNATION PLACEMENT ON INTERSTATE GUIDE SIGNS

AUTH. NO.	DRAWN BY
REVISIONS	DATE 1-8-59
	SCALE NONE
SHEET NO. 1 OF 1	FILE NO. SB-3-63

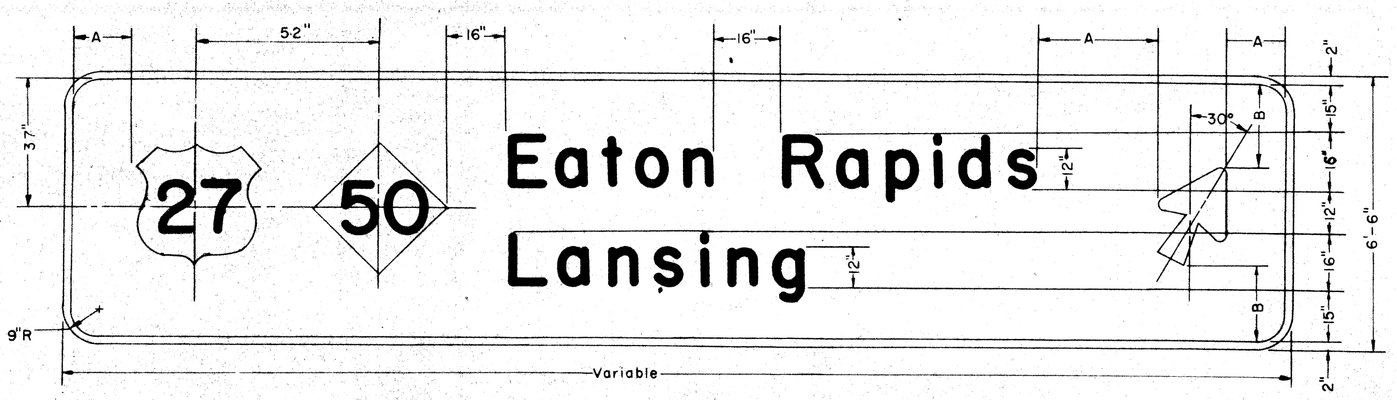

DETAIL OF SIGN
Scale: None.

SPECIFICATIONS

Size: 6'-6" x variable - Aluminum extruded planks.
Legend: 16" Series "E" upper case and 12" loop height lower case letters (Bureau of Public Roads standard alphabet) with No. 36 route markers and No. 20 expressway-type arrow (See plans SB-36, SB-3-5 or SB-3-65 for route marker construction details and plan SB-64 for detail of expressway arrow).

Notes:
Dimensions "A" shall be variable (16" min.) but approximately equal.
Dimensions "B" shall be equal.
Spacing between letters shall be in accordance with letter spacing charts prepared by the Traffic Division.
When applicable, a no. 36 route marker overlay with "BUSINESS" overlay (see plan SB-3-109) shall be centered as one unit on the horizontal centerline shown through the route marker location.

Color: Face: Letters, numerals & border - silver, clear or white.
Arrows - silver.
Route Markers - variable.
Background - green.
Back: Unpainted.
Reflectorization: Standard Specifications:
Background, route markers (with enclosed legend) & arrows - 7.26(h)2.
Letters, numerals & border - 1. 7.26(h)2 or
2. 7.26(i) 1 or
3. 7.26(i)2

All material and workmanship shall comply with M.S.H.D. current specifications.

Rev. 3/30/61

INTERSTATE OVERHEAD EXIT DIRECTION SIGN	AUTH. NO.	DRAWN A.C.W.
	CONT. SEC.	DATE 5-4-59
	REF.	SCALE NONE
	SHEET 1 OF 1	PLAN SB-3-101

OFFICES OF ENGINEERING, CONSTRUCTION, MAINTENANCE

APPROVED _____ CONSTRUCTION ENGINEER _____ DATE _____
APPROVED _____ MAINTENANCE ENGINEER _____ DATE _____
APPROVED _____ CHIEF OF DESIGN _____ DATE _____

STATE HIGHWAY DEPARTMENT APPROVAL

APPROVED JOHN C. MACKIE, STATE HIGHWAY COMMISSIONER
BY _____ DIRECTOR OF ENGINEERING & CHIEF ENGINEER _____ DATE _____

APPROVED BY BUREAU OF PUBLIC ROADS _____ DATE _____

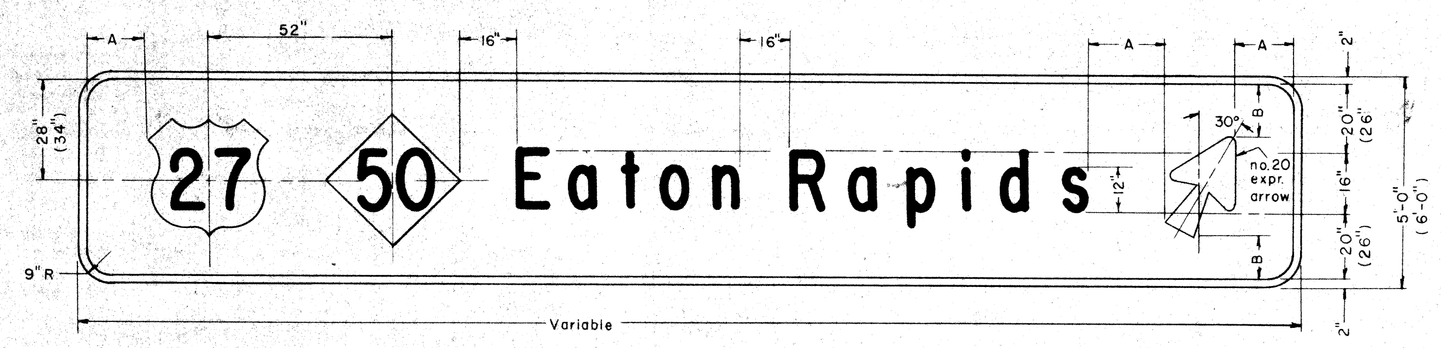

DETAIL OF SIGN
Scale: none

SPECIFICATION

Size: Variable - Aluminun extruded planks
Legend: 16" Series "E" upper case and 12" loop height lower case letters (Bureau of Public Roads standard alphabet) with No. 36 route markers and No. 20 or 16 expressway-type arrow (See plans SB-36, SB-3-5 or SB-3-65 for route marker construction details and plan SB-64 for detail of expressway arrow).

Notes:
Dimensions "A" shall be variable (16" min.) but approximately equal.
Dimensions "B" shall be equal.
Spacing between letters shall be in accordance with letter spacing charts prepared by the Traffic Division.
If business route overlay is to be placed on sign, dimensions shall be changed as shown in parentheses. A no. 36 route marker overlay with "BUSINESS" overlay (see plan SB-3-109) shall be centered as one unit on the horizontal centerline shown through the route marker location.

Color: Face: Letters, numerals & border - silver, clear or white.
Arrows - silver.
Route Markers - variable.
Background - green.
Back: Unpainted.
Reflectorization: Standard Specifications:
Background, route markers (with enclosed legend) & arrows - 7.26(h)2.
Letters, numerals & border - 1. 7.26(h)2 or
2. 7.26(i) 1 or
3. 7.26(i)2

All material and workmanship shall comply with M.S.H.D. current specifications.

Rev. 3/29/61

INTERSTATE OVERHEAD EXIT DIRECTON SIGN	AUTH. NO.	DRAWN vern
	CONT. SEC.	DATE 5-5-59
	REF.	SCALE None
	SHEET 1 OF 2	PLAN SB-3-100

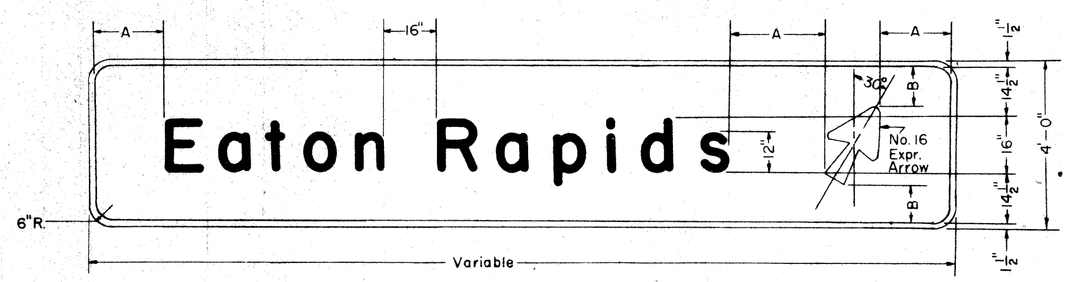

DETAIL OF SIGN
Scale: None

INTERSTATE OVERHEAD EXIT DIRECTION SIGN	AUTH. NO.	DRAWN A.C.W.
	CONT. SEC.	DATE 5-4-59
	REF.	SCALE NONE
	SHEET 2 OF 2	PLAN SB-3-100

MICHIGAN STATE HIGHWAY DEPARTMENT

STANDARD PLANS FOR HIGHWAY SIGNS AND SUPPORTS

DESIGN AND TRAFFIC DIVISIONS

CHECKED _____ ENGINEER OF TRAFFIC OPERATIONS _____ DATE _____
RECOMMENDED FOR APPROVAL _____ ENGINEER OF BRIDGE AND ROAD DESIGN _____ DATE _____
RECOMMENDED FOR APPROVAL _____ DIRECTOR OF TRAFFIC DIVISION _____ DATE _____

SS-38

FILE NO. U.S. NO. 350 STENCIL	82251 F C16	STATE PROJECT	FEDERAL PROJECT	SHEET NO.
		82251	I 75-1(93)53	409

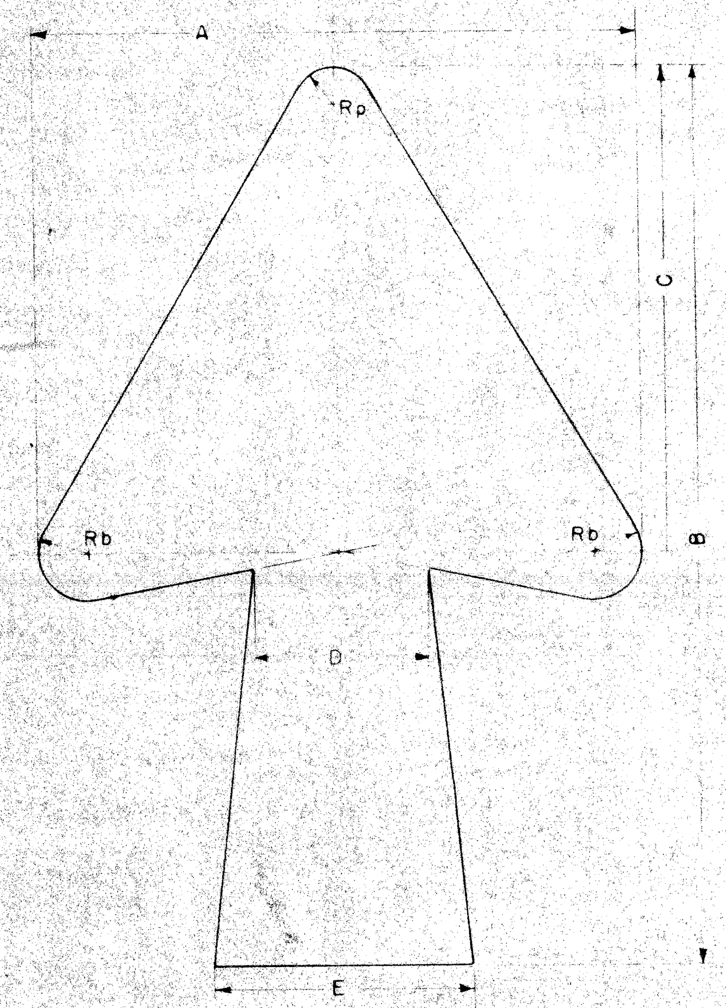

ARROW NUMBER	A	B	C	D	E	Rp	Rb
3	3.0	4.50	2.42	0.83	1.35	0.17	.25
4	4.0	6.00	3.22	1.11	1.80	0.22	.33
5	5.0	7.50	4.02	1.39	2.25	0.28	.42
6	6.0	9.00	4.84	1.67	2.70	0.33	.50
7	7.0	10.50	5.64	1.94	3.15	0.39	.58
8	8.0	12.00	6.45	2.22	3.61	0.45	.67
9	9.0	13.50	7.25	2.50	4.06	0.50	.75
10	10.0	15.00	8.05	2.78	4.50	0.56	.83
11	11.0	16.50	8.86	3.06	4.95	0.61	.92
12	12.0	18.00	9.67	3.33	5.65	0.67	1.00
13	13.0	19.50	10.48	3.61	5.85	0.72	1.08
14	14.0	21.00	11.28	3.88	6.30	0.78	1.16
15	15.0	22.50	12.05	4.16	6.75	0.84	1.25
16	16.0	24.00	12.87	4.44	7.20	0.89	1.33
18	18.0	27.00	14.50	5.00	8.10	1.00	1.50
20	20.0	30.00	16.10	5.55	9.00	1.13	1.65
24	24.0	36.00	19.34	6.66	11.30	1.34	2.00

EXPRESSWAY TYPE DIRECTIONAL ARROW	
AUTH NO	DRAWN R.N.P
CONT SEC	DATE 1-14-59
REF	SCALE
SHEET OF	PLAN SB-64

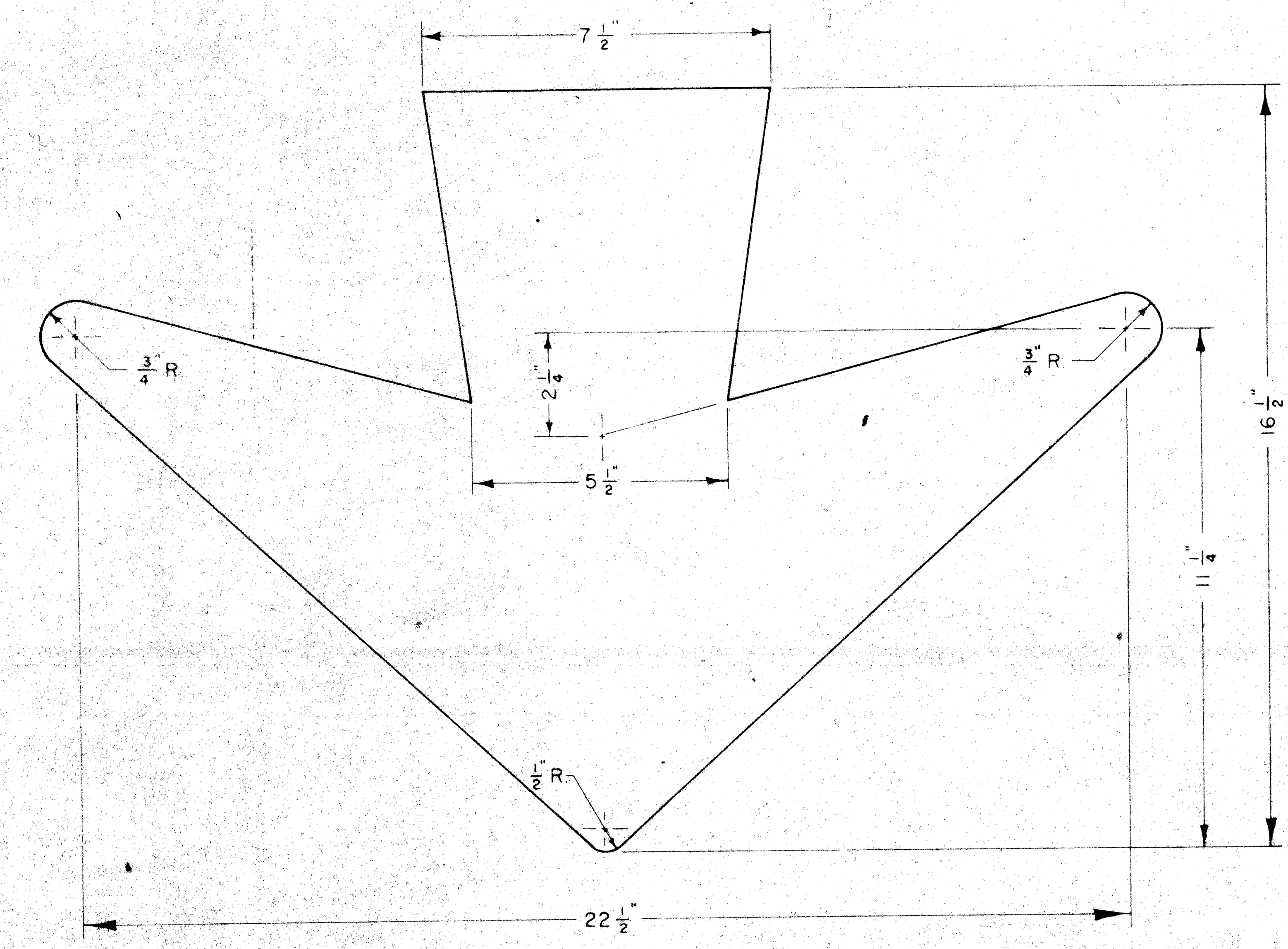

INTERSTATE ARROW FOR LANE DIRECTION	
AUTH NO / REVISIONS	DRAWN BY / DATE 1-8-59 / SCALE 3/8" = 1"
SHEET NO. 1 OF 1	FILE NO. SB-3-64

	No. 16	No. 20	No. 24	No. 30	No. 36	No. 42	No. 48
A	16.5	20.62	24.75	30.94	37.12	43.31	49.50
B	16.00	20.00	24.00	30.00	36.00	42.00	48.00
C	8.25	10.31	12.37	15.46	18.55	21.65	24.75
D	2.44	3.05	3.66	4.58	5.50	6.42	7.34
E	2.50	3.12	3.75	4.69	5.62	6.56	7.50
F	9.97	12.46	14.95	18.69	22.44	26.18	29.91
G	6.03	7.54	9.05	11.31	13.56	15.84	18.11
H	2.08	2.60	3.12	3.90	4.68	5.46	6.24
I	5.73	7.16	8.59	10.74	12.88	15.04	17.19
J	3.50	4.38	5.25	6.56	7.88	9.20	10.50
K	5.69	7.11	8.53	10.66	12.79	14.93	17.07
L	2.44	3.05	3.67	4.58	5.50	6.42	7.34
M	1.72	2.15	2.58	3.25	3.87	4.54	5.16
N	8.00	10.00	12.00	15.00	18.00	21.00	24.00
O	4.00	5.00	6.00	7.50	9.00	10.50	12.00
P	3.50	4.38	5.25	6.56	7.88	9.20	10.50
Q	3.50	4.38	5.25	6.56	7.88	9.20	10.50
R	9.00	11.25	13.50	16.88	20.25	23.62	27.00
S	4.25	5.31	6.38	7.96	9.55	11.14	12.75
T	3.00	3.75	4.50	5.62	6.75	7.88	9.00

SPECIFICATIONS

Size: As indicated in table-reflective sheeting material to be applied to expressway-type signs.

Legend: Numerals of the height indicated (Series variable) M.S.H.D. standard alphabet.

Color: Green numerals on a silver background.

Reflectorization: Standard specifications 7.26 (h)2 silver and green.

All material and workmanship shall comply with M.S.H.D. current specifications.

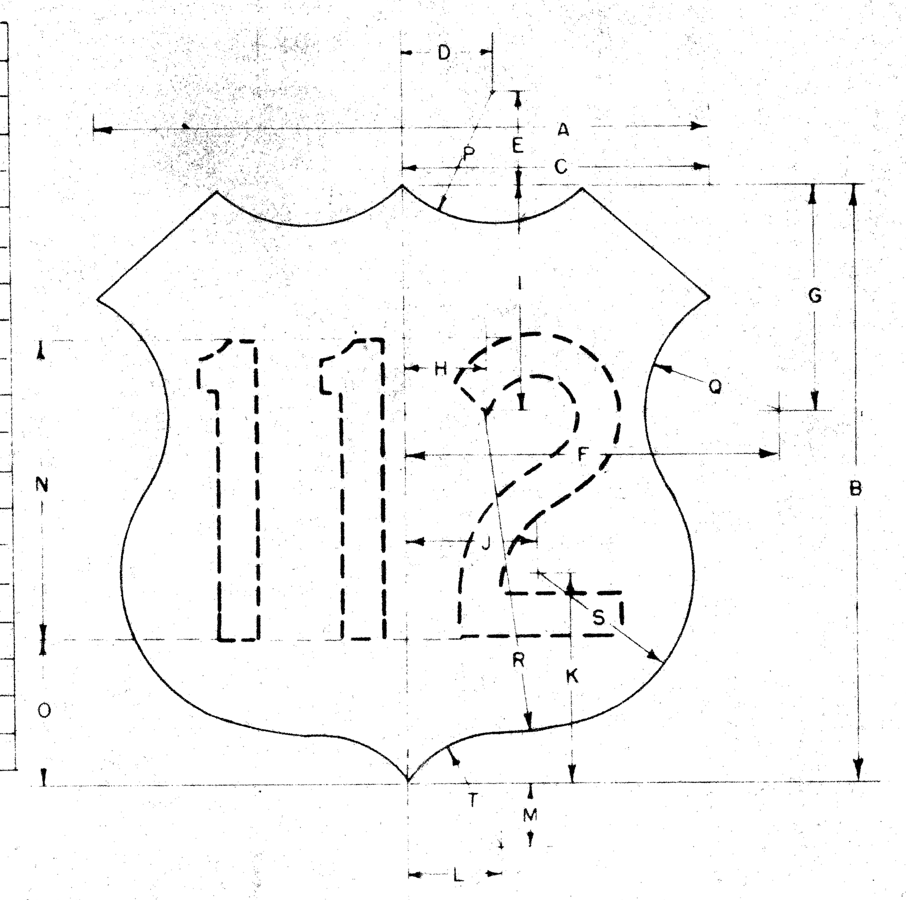

Note: Spacing between numerals shall be in accordance with letter spacing charts prepared by the Traffic Division. Numerals may be cut out of the silver route marker, so that the green reflectorized background of the sign shows thru, or they may be green reflectorized material applied directly to the silver route marker.

ROUTE MARKER OVERLAY FOR EXPRESSWAY SIGNS	
AUTH NO	DRAWN T.J.M
CONT SEC	DATE 4-1-59
REF	SCALE NONE
SHEET 1 OF 6	PLAN SB-36

	No. 16	No. 20	No. 24	No. 30	No. 36	No. 42	No. 48
A	13.00	15.00	19.00	24.00	29.00	33.00	38.00
B	13.00	15.00	19.00	24.00	29.00	33.00	38.00
C	5.20	5.60	7.44	9.48	11.50	12.88	14.50
D	8.00	10.00	12.00	15.00	18.00	21.00	24.00

SPECIFICATIONS

Size: As indicated in table-reflectorized sheeting material to be applied to expressway-type signs.

Legend: Numerals of the height indicated (Series variable) M.S.H.D. standard alphabet.

Color: Green numerals on a silver background.

Reflectorization: Standard specifications 7.26(h)2 silver and green.

All materials and workmanship shall comply with Michigan State Highway Department current Specifications.

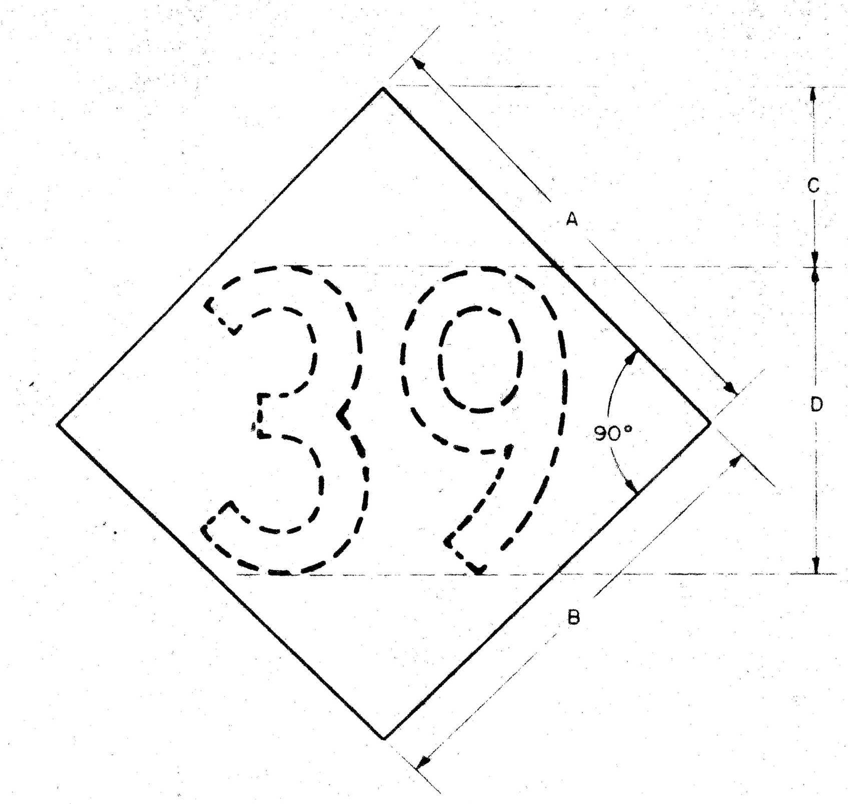

Note: Spacing between numbers shall be in accordance with letter spacing charts prepared by the Traffic Division. Numerals may be cut out of the silver route marker so that the green reflectorized background of the sign shows thru, or they may be green reflectorized material applied directly to the silver route marker.

ROUTE MARKER OVERLAY FOR EXPRESSWAY SIGNS	
AUTH NO	DRAWN
CONT SEC	DATE
REF	SCALE
SHEET 2 OF 6	PLAN SB-36

OFFICES OF ENGINEERING, CONSTRUCTION, MAINTENANCE

APPROVED [signature] CONSTRUCTION ENGINEER — DATE 6-10-60

APPROVED [signature] MAINTENANCE ENGINEER — DATE 6-10-60

APPROVED [signature] CHIEF OF DESIGN — DATE 6-10-60

STATE HIGHWAY DEPARTMENT APPROVAL

APPROVED JOHN C. MACKIE, STATE HIGHWAY COMMISSIONER

BY [signature] DIRECTOR OF ENGINEERING & CHIEF ENGINEER — DATE 6/10/60

APPROVED BY BUREAU OF PUBLIC ROADS — DATE

MICHIGAN STATE HIGHWAY DEPARTMENT

STANDARD PLANS FOR HIGHWAY SIGNS AND SUPPORTS

DESIGN AND TRAFFIC DIVISIONS

CHECKED [signature] ENGINEER OF TRAFFIC OPERATIONS — DATE May 10, 1960

RECOMMENDED FOR APPROVAL [signature] ENGINEER OF BRIDGE AND ROAD DESIGN — DATE

RECOMMENDED FOR APPROVAL [signature] DIRECTOR OF TRAFFIC DIVISION — DATE 5-16-60

SS-40 | FILE NO. USE NO. 350 STENCIL | 82251 F C16 | STATE PROJECT 82251 | FEDERAL PROJECT I-75-1(43)53 | SHEET NO. 410

	No 36	No 42	No 48
A	11.50	12.00	13.00
B	10.00	12.00	14.00
C	2.50	3.00	3.50
D	10.00	12.00	14.00

SPECIFICATIONS

Size: As indicted in table – reflectorized sheeting material to be applied to expessway-type signs

Legend: Numerals of the height indicated (Series variable) M.S.H.D. standard alphabet. Letter of the height indicated (Series "D") M.S.H.D. standard alphabet

Color: Green numerals and letter on a silver background

Reflectorization: Standard specifications 7.26(h)2 silver and green.

All materials and workmanship shall comply with Michigan State Highway Department current specifications

Note: Spacing between numerals shall be in accordance with letter spacing charts prepared by the Traffic Division. Numerals and letter may be cut out of the silver route marker so that the green reflectorized background of the sign shows thru, or they may be green reflectorized material applied directly to the silver route marker

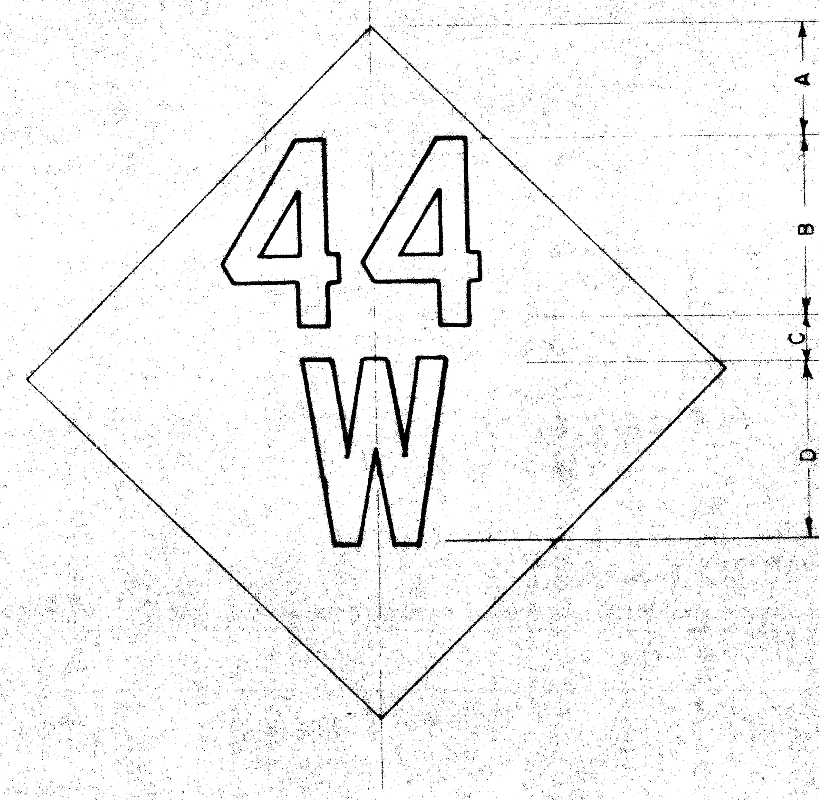

Note: For construction details of silver route marker, refer to sheet 2 of plan SB-36

DIRECTIONAL STATE ROUTE MARKER OVERLAY FOR EXPRESSWAY SIGNS	AUTH. NO.	DRAWN T.J.M.
	CONT. SEC.	DATE 4-7-59
	REF.	SCALE As shown
	SHEET 3 OF 6	PLAN SB-36

	No.36	No.42	No.48
A	6.00	6.75	7.50
B	10.00	12.00	14.00
C	4.00	4.25	4.25
D	10.00	12.00	14.00

SPECIFICATIONS

Size: As indicated in table – reflective sheeting material to be applied to expressway-type signs.

Legend: Numerals of the height indicated (Series variable) M.S.H.D. standard alphabet. Letter of the height indicated (Series "E") Bureau of Public Roads standard alphabet.

Color: Green numerals and letter on a silver background

Reflectorization: Standard specifications 7.26 (h) 2 silver and green.

All material and workmanship shall comply with M.S.H.D. current specifications.

Note: Spacing between numerals shall be in accordance with letter spacing charts prepared by the Traffic Division. Numerals and letter may be cut out of the silver route marker, so that the green reflectorized background of the sign shows thru, or they may be green reflectorized material applied directly to the silver route marker.

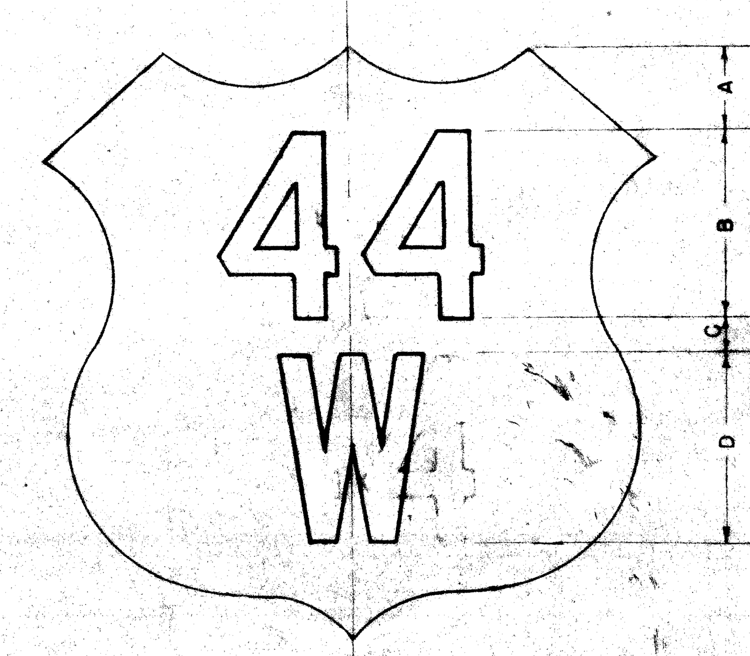

Note: For construction details of silver route marker, refer to sheet 1 of plan SB-36

U.S. DIR'L. RTE. MARKER OVERLAY FOR EXPRESSWAY SIGNS	AUTH. NO.	DRAWN T.J.M.
	CONT. SEC.	DATE 4-6-59
	REF.	SCALE AS SHOWN
	SHEET 4 OF 6	PLAN SB-36

	No.24	No 30	No 36	No. 42	No. 48
A	4.50	5.25	6.00	6.75	7.50
B	6.00	8.00	10.00	12.00	14.00
C	2.50	3.25	4.00	4.25	4.50
D	6.00	8.00	10.00	12.00	14.00

SPECIFICATIONS

Size: As indicated in table – reflectorized sheeting material to be applied to expressway-type signs

Legend: Numerals of the height indicated (Series variable) M.S.H.D. standard alphabet

Color: Green numerals on a silver background

Reflectorization: Standard specifications 7.26 (h) 2 silver and green

All material and workmanship shall comply with M.S.H.D. current specifications

Spacing between numerals shall be in accordance with letter spacing charts prepared by the Traffic Division. Numerals may be cut out of the silver route marker so that the green reflectorized background of the sign shows thru, or they may be green reflectorized material applied directly to the silver route marker.

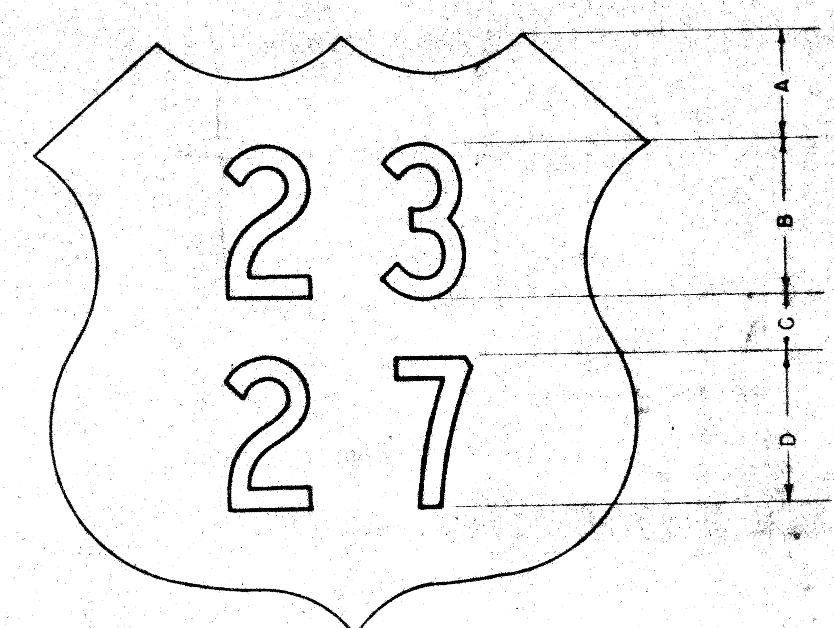

For construction details of silver route marker, refer to sheet 1 of plan SB-36

ROUTE MARKER OVERLAY FOR EXPRESSWAY SIGNS	AUTH. NO.	DRAWN T.J.M.
	CONT. SEC.	DATE 5-31-59
	REF.	SCALE NONE
	SHEET 5 OF 6	PLAN SB-36

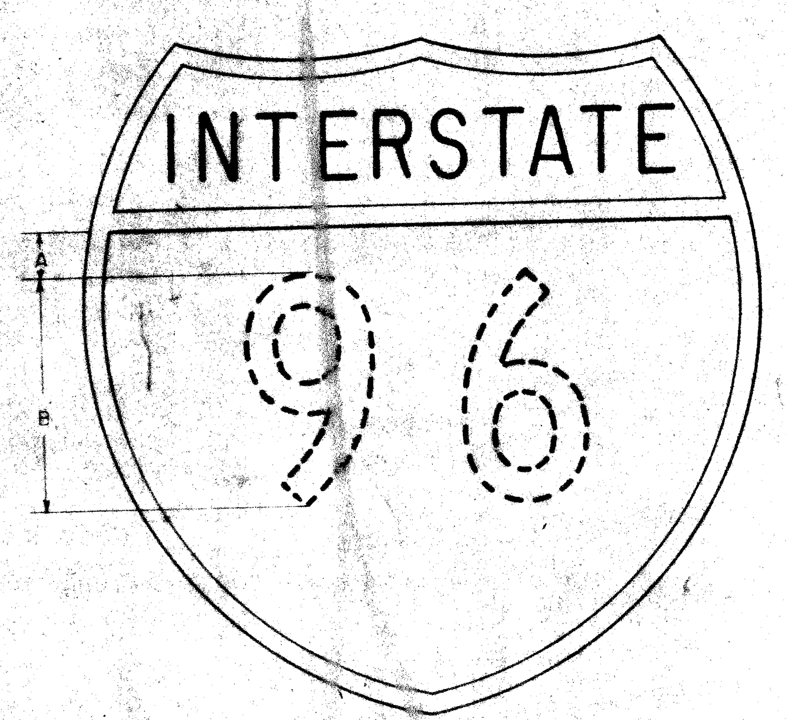

Note: For construction details of interstate route marker overlay, refer to plan SB-3-5.

	No. 24	No. 30	No. 36	No. 42	No. 48
A	$2\frac{1}{8}''$	$2\frac{13}{16}''$	$3\frac{3}{8}''$	$3\frac{15}{16}''$	$4\frac{1}{2}''$
B	9"	12"	14"	16"	18"

SPECIFICATIONS

Size: As indicated in table – reflectorized sheeting material to be applied to expressway – type signs.

Legend: Numerals of the height indicated (Series variable) M.S.H.D. standard alphabet.

Color: See plan SB-3-5.

Reflectorization: See plan SB-3-5.

All material and workmanship shall comply with Michigan State Highway Department current specifications.

Note: Spacing between numerals shall be in accordance with letter spacing charts prepared by the Traffic Division.

INTERSTATE ROUTE MARKER OVERLAY FOR EXPRESSWAY SIGNS	AUTH. NO.	DRAWN P.E.H.
	CONT. SEC.	DATE 4-26-60
	REF.	SCALE NONE
	SHEET 6 OF 6	PLAN SB-36

OFFICES OF ENGINEERING, CONSTRUCTION, MAINTENANCE

APPROVED: CONSTRUCTION ENGINEER — DATE 6-10-60

APPROVED: MAINTENANCE ENGINEER — DATE 6-10-60

APPROVED: CHIEF OF DESIGN — DATE 6-10-60

STATE HIGHWAY DEPARTMENT APPROVAL

APPROVED JOHN C. MACKIE, STATE HIGHWAY COMMISSIONER

BY: DIRECTOR OF ENGINEERING & CHIEF ENGINEER — DATE 6-10-60

APPROVED BY BUREAU OF PUBLIC ROADS — DATE

MICHIGAN STATE HIGHWAY DEPARTMENT

STANDARD PLANS FOR

HIGHWAY SIGNS AND SUPPORTS

DESIGN AND TRAFFIC DIVISIONS

CHECKED: ENGINEER OF TRAFFIC OPERATIONS — DATE

RECOMMENDED FOR APPROVAL: ENGINEER OF BRIDGE AND ROAD DESIGN — DATE

RECOMMENDED FOR APPROVAL: DIRECTOR OF TRAFFIC DIVISION — DATE 5-16-60

SS-41

FILE NO.		STATE PROJECT	FEDERAL PROJECT	SHEET NO.
	82251 F C16	82251		411

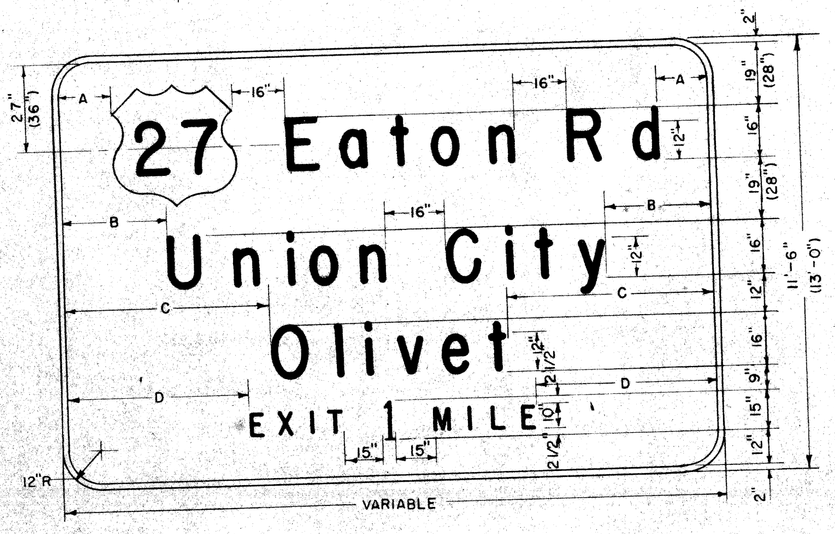

DETAIL OF SIGN

Scale. None

NOTE:

Dimensions "A" shall be variable (16" min) but approximately equal.
Dimensions "B" shall be variable (16" min) but approximately equal.
Dimensions "C" shall be variable (16" min) but approximately equal.
Dimensions "D" shall be variable (10" min) but approximately equal.

Spacing between letters shall be in accordance with letter spacing charts prepared by the Traffic Division.

SPECIFICATIONS

Size: Variable – Aluminum extruded planks.

Legend: First line – 16" Series "E" upper case and 12" loop height lower case letters with No. 36 route marker (See plans SB-36, SB-3-5 or SB-3-65 for construction details)*
Second & Third lines – 16" Series "E" upper case and 12" loop height lower case letters.
Fourth line – 10" Series "E" letters with 15" Series "E" numeral (See plan SB-3-63 for detail of fractional designation placement) Bureau of Public Roads standard alphabet.

Color: Face: Letters, numerals and border – silver, clear or white.
Route markers – variable.
Background – green.
Back: Unpainted.

Reflectorization: Standard Specifications:
Background, route markers (with enclosed legend) & arrows – 7.26(h)2.
Letters, numerals & border – 1. 7.26(h)2 or
2. 7.26(i)1 or
3. 7.26(i)2

All material and workmanship shall comply with M.S.H.D. current Specifications.

* Where cardinal direction is specified on plans in place of road name, use 15" Series "E" capital letters and center vertically with route maker.

NOTE:

If business route overlay is to be placed on sign, dimensions shall be changed as shown in parenthesis and all route marker overlays shall be No. 36.

A No. 36 route marker overlay with "BUSINESS" overlay (see std. plan No. SB-3-109) shall be centered as one unit on the horizontal centerline shown through the route marker location.

INTERSTATE ADVANCE EXIT GUIDE SIGN WITH ROUTE MARKER AND ROAD NAME OR CARDINAL DIRECTION	AUTH. NO.		DRAWN W.P.B
	CONT. SEC.		DATE 2-17-61
	REF.		SCALE None
	SHEET 1 OF 2	PLAN SB-3-117	

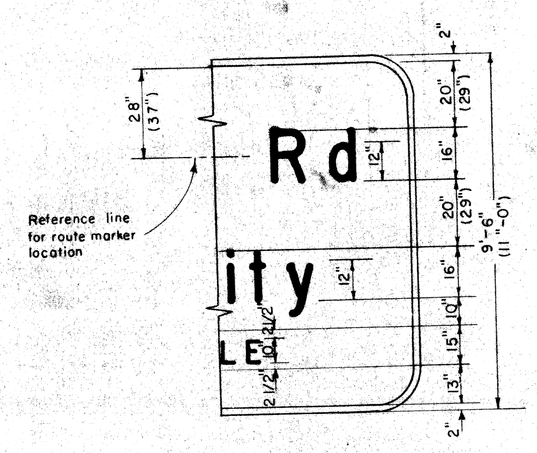

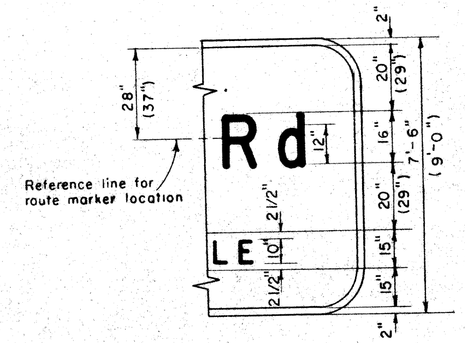

INTERSTATE ADVANCE EXIT GUIDE SIGN WITH ROUTE MARKER AND ROAD NAME OR CARDINAL DIRECTION	AUTH. NO.		DRAWN W.P.B
	CONT. SEC.		DATE 2-17-61
	REF.		SCALE None
	SHEET 2 OF 2	PLAN SB-3-117	

OFFICES OF ENGINEERING, CONSTRUCTION, MAINTENANCE

APPROVED _____ CONSTRUCTION ENGINEER _____ DATE

APPROVED _____ MAINTENANCE ENGINEER _____ DATE

APPROVED _____ CHIEF OF DESIGN _____ DATE

STATE HIGHWAY DEPARTMENT APPROVAL

APPROVED BY JOHN C. MACKIE, STATE HIGHWAY COMMISSIONER

_____ DIRECTOR OF ENGINEERING & CHIEF ENGINEER _____ DATE

APPROVED BY BUREAU OF PUBLIC ROADS _____ DATE

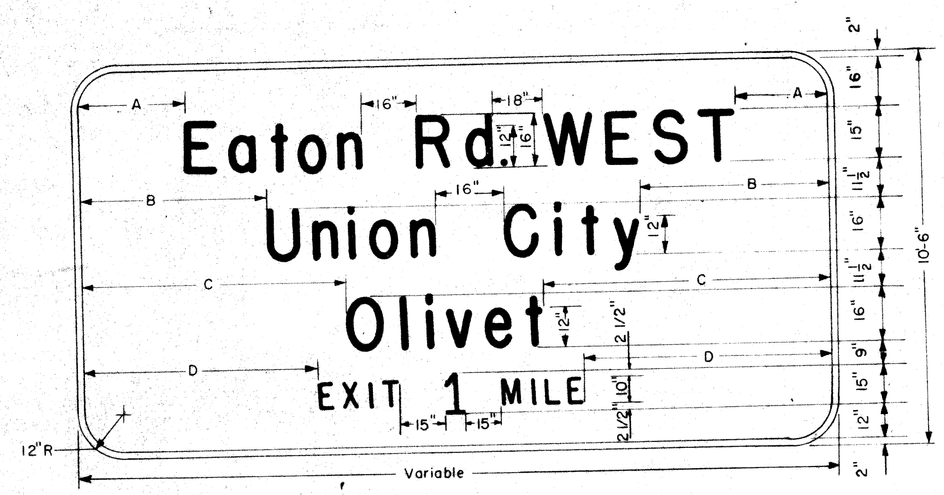

DETAIL OF SIGN

Scale None

Note:

Dimensions "A" shall be variable (16" min.) but approximately equal.
Dimensions "B" shall be variable (16" min.) but approximately equal.
Dimensions "C" shall be variable (16" min.) but approximately equal.
Dimensions "D" shall be variable (10" min.) but approximately equal.

Spacing between letters shall be in accordance with letter spacing charts prepared by the Traffic Division.

SPECIFICATIONS

Size: Variable - Aluminum extruded planks

Legend: First line - 16" Series "E" upper case, 12" loop height lower case letters and 15" Series "E" capital letters.
Second & Third lines - 16" Series "E" upper case and 12" loop height lower case letters.
Fourth line - 10" Series "E" letters and 15" Series "E" numeral (See plan SB-3-63 for detail of fractional designation placement.) Bureau of Public Roads standard alphabet.

Color: Face - Letters, numeral and border - silver, clear, or white.
Route markers - variable
Background - green
Back - unpainted

Reflectorization: Standard Specifications:
Background - 7.26(h)2
Letters, numerals and border - (1) 7.26(h)2 or
(2) 7.26(i)1 or
(3) 7.26(i)2

All material and workmanship shall comply with M.S.H.D. current specifications.

INTERSTATE ADVANCE EXIT GUIDE SIGN WITH ROAD NAME AND CARDINAL DIRECTION	AUTH. NO.		DRAWN by E.B.A.
	CONT. SEC.		DATE 2-6-61
	REF.		SCALE NONE
	SHEET 1 OF 2	PLAN SB-3-118	

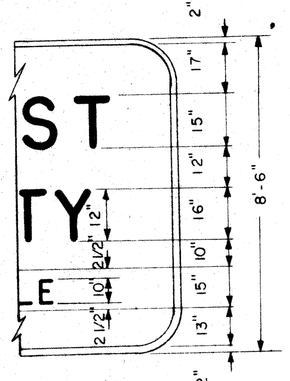

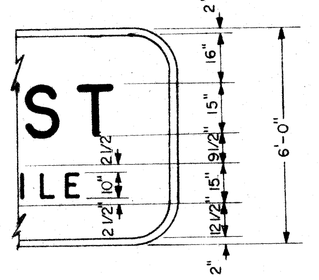

INTERSTATE ADVANCE EXIT GUIDE SIGN WITH ROAD NAME AND CARDINAL DIRECTION	AUTH. NO.		DRAWN by E.B.A.
	CONT. SEC.		DATE 2-6-61
	REF.		SCALE NONE
	SHEET 2 OF 2	PLAN SB-3-118	

MICHIGAN STATE HIGHWAY DEPARTMENT

STANDARD PLANS FOR

HIGHWAY SIGNS AND SUPPORTS

DESIGN AND TRAFFIC DIVISIONS

CHECKED _____ ENGINEER OF TRAFFIC OPERATIONS _____ DATE

RECOMMENDED FOR APPROVAL _____ ENGINEER OF BRIDGE AND ROAD DESIGN _____ DATE

RECOMMENDED FOR APPROVAL _____ DIRECTOR OF TRAFFIC DIVISION _____ DATE

SS-43

FILE NO. DRC NO. 330 STENCIL	STATE PROJECT	FEDERAL PROJECT	SHEET NO.
82251 F C16	82251	I 75-1(93)155	412

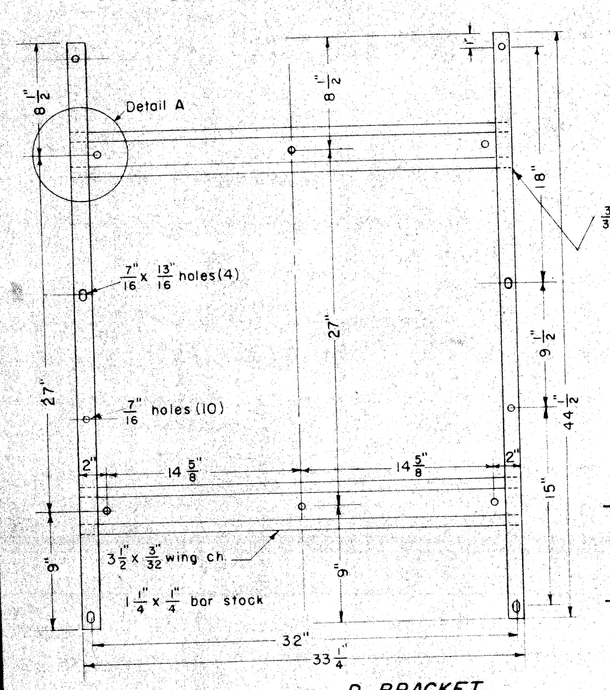

D BRACKET

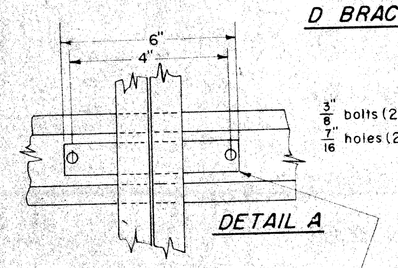

DETAIL A

¼" x 1½" x 6½" COUPLING-LINK for joining two D brackets side by side. (2) each installation.

C BRACKET

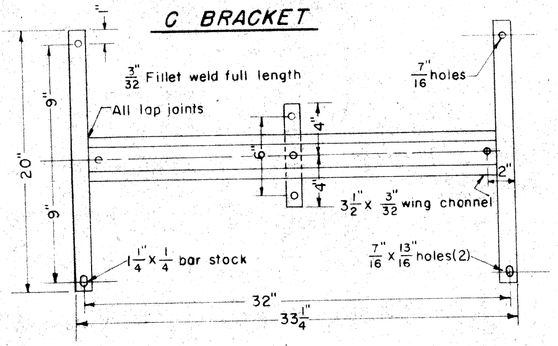

Use ⅜" flat galv. washers where ⅞" galv. bolts are specified.

EXTENSION BAR

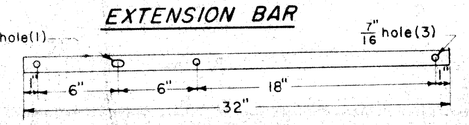

For C and D brackets

NOTE:

See plan SF-49 for details of fastening.

NOTE:

Use 3½ x 3/32 steel wing channel and 1¼" X ¼" steel bar stock for "C" and "D" brackets.

Use 1½ x ¼ steel bar stock for Extension Bar, Coupling link and Tie-Bar.

Delineator (light) steel sign post, 1.33 lbs per foot min., may be substituted for 3½ wing channel.

TIE-BAR

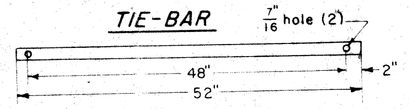

For cross-bracing of adjacent posts carrying special oversize route markers.

REVISED AUGUST 1960

FABRICATION DETAILS: C & D BRACKETS, COUPLING LINKS, EXTENSION BAR,	AUTH. NO.	DRAWN W.P.B.
	CONT. SEC.	DATE 4-2-59
	REF.	SCALE
	SHEET 1 OF 1	PLAN SB-65

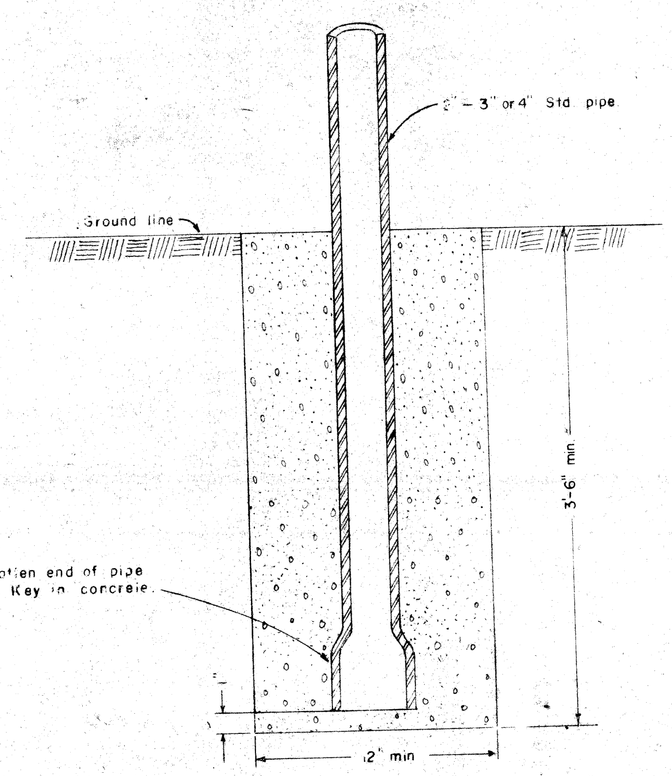

SECTION A-A

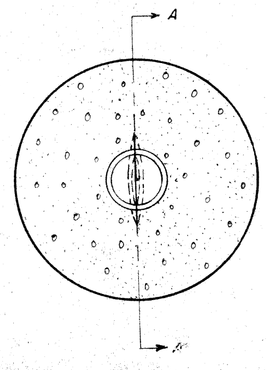

PLAN VIEW

FOUNDATION DETAIL FOR 2" 3, & 4" DIA PIPE	AUTH. NO.	DRAWN [illegible]
	CONT. SEC.	DATE [illegible] 59
	REF.	SCALE
	SHEET 1 OF 1	PLAN SB-75

FEV - SEPT 60

OFFICES OF ENGINEERING, CONSTRUCTION, MAINTENANCE

APPROVED _____ CONSTRUCTION ENGINEER _____ DATE _____

APPROVED _____ MAINTENANCE ENGINEER _____ DATE _____

APPROVED _____ CHIEF OF DESIGN _____ DATE _____

STATE HIGHWAY DEPARTMENT APPROVAL

APPROVED JOHN C. MACKIE, STATE HIGHWAY COMMISSIONER

BY _____ DIRECTOR OF ENGINEERING & CHIEF ENGINEER _____ DATE _____

APPROVED BY BUREAU OF PUBLIC ROADS _____ DATE _____

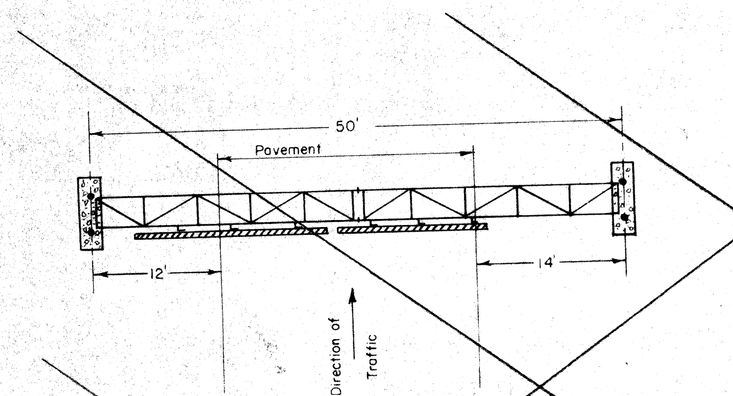

Note: Distance from edge of pavement shall be the same as shown for span lengths greater than 50' unless otherwise specified on the plans.

ELEVATION OF BASE TOP#
(O=CROWN OF PVT.)

MAXIMUM SIGN HEIGHT	TYPE A TRUSS END SUPPORT A-1 15'-BH	TYPE A TRUSS END SUPPORT A-1 16'6"BH	TYPE B TRUSS END SUPPORT B-1 15'-BH	TYPE B TRUSS END SUPPORT B-1 16'6"BH	TYPE B TRUSS END SUPPORT B-2 15'-BH	TYPE B TRUSS END SUPPORT B-2 16'6"BH	TYPE C TRUSS END SUPPORT C-2 15'-BH	TYPE C TRUSS END SUPPORT C-2 16'6"BH
4'-0"	-1'-6"	0'-0"	-1'-6"	0'-0"	-3'-0"	-1'-6"	-3'-9"	-2'-3"
4'-6"	-1'-3"	0'-3"	-1'-3"	0'-3"	-2'-9"	-1'-3"	-3'-9"	-2'-3"
5'-0"	-1'-0"	0'-6"	-1'-0"	0'-6"	-2'-6"	-1'-0"	-3'-9"	-2'-3"
5'-6"	-0'-9"	0'-9"	-0'-9"	0'-9"	-2'-3"	-0'-9"	-3'-9"	-2'-3"
6'-0"	-0'-6"	1'-0"	-0'-6"	1'-0"	-2'-0"	-0'-6"	-3'-9"	-2'-3"
6'-6"	-0'-3"	1'-3"	-0'-3"	1'-3"	-1'-9"	-0'-3"	-3'-9"	-2'-3"
7'-0"	0'-0"	1'-6"	0'-0"	1'-6"	-1'-6"	0'-0"	-3'-9"	-2'-3"
7'-6"	0'-3"	1'-9"	0'-3"	1'-9"	-1'-3"	0'-3"	-3'-9"	-2'-3"
8'-0"	0'-6"	2'-0"	0'-6"	2'-0"	-1'-0"	0'-6"	-3'-6"	-2'-0"
8'-6"	0'-9"	2'-3"	0'-9"	2'-3"	-0'-9"	0'-9"	-3'-3"	-1'-9"
9'-0"	1'-0"	2'-6"	1'-0"	2'-6"	-0'-6"	1'-0"	-3'-0"	-1'-6"
9'-6"	1'-3"	2'-9"	1'-3"	2'-9"	-0'-3"	1'-3"	-2'-9"	-1'-3"
10'-0"	1'-6"	3'-0"	1'-6"	3'-0"	0'-0"	1'-6"	-2'-6"	-1'-0"
10'-6"	1'-9"	3'-3"	1'-9"	3'-3"	0'-3"	1'-9"	-2'-3"	-0'-9"
11'-0"	2'-0"	3'-6"	2'-0"	3'-6"	0'-6"	2'-0"	-2'-0"	-0'-6"
11'-6"	2'-3"	3'-9"	2'-3"	3'-9"	0'-9"	2'-3"	-1'-9"	-0'-3"
12'-0"	2'-6"	4'-0"	2'-6"	4'-0"	1'-0"	2'-6"	-1'-6"	0'-0"

#Applicable unless otherwise specified on the plans.
B.H. - Bottom height of sign above crown of pavement.

Rev. 12-2-60
Rev. 6-12-60
Rev. 2-8-60
Rev. 12-15-59

DETAIL OF BASE LOCATION FOR OVERHEAD SIGN SUPPORT STRUCTURES	AUTH. NO.	DRAWN P.H.
	CONT. SEC.	DATE 12-6-60
	REF.	SCALE NONE
	SHEET 1 OF 1	PLAN SB-77

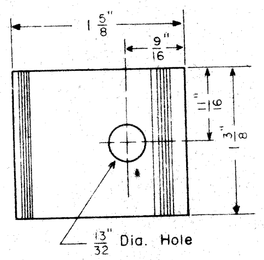

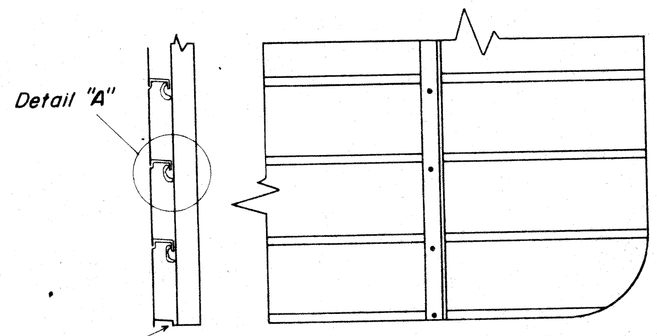

Bolt directly through angle and extruded sign plank at bottom of sign. Use ⅜" x 1" Hex. Hd. bolt, 2024-T4 Aluminum Alloy, Flatwasher-alclad 2024-T4 Aluminum Alloy and Elastic Stop Nut 68-NE-066 or equivalent.

SIGN CLIP APPLICATION

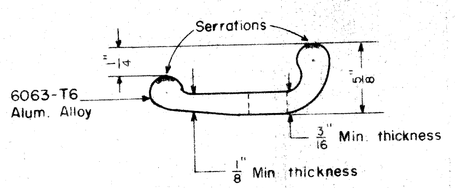

SIGN CLIP

Scale: Full

Note

Use ⅜" x 1¾" Hex. Hd. Bolt 2024-T4 Aluminum Alloy, Flatwasher-alclad 2024-T4 Aluminum Alloy and Elastic Stop Nut 68-NE-066 or equivalent

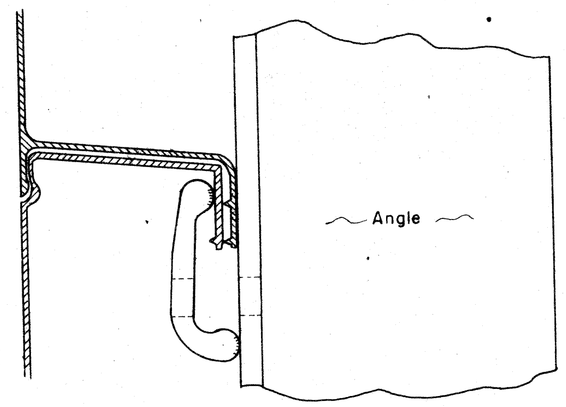

DETAIL A

EXTRUDED SIGN CLIP FOR ALUMINUM EXTRUDED SIGNS	AUTH. NO.	DRAWN H.J.B.
	CONT. SEC.	DATE 4/25/61
	REF.	SCALE AS SHOWN
	SHEET 1 OF 1	PLAN SB-97

MICHIGAN STATE HIGHWAY DEPARTMENT

STANDARD PLANS FOR

HIGHWAY SIGNS AND SUPPORTS

DESIGN AND TRAFFIC DIVISIONS

CHECKED _____ ENGINEER OF TRAFFIC OPERATIONS _____ DATE _____

RECOMMENDED FOR APPROVAL _____ ENGINEER OF BRIDGE AND ROAD DESIGN _____ DATE _____

RECOMMENDED FOR APPROVAL _____ DIRECTOR OF TRAFFIC DIVISION _____ DATE _____

SS-45

FILE NO. USR NO. 350 STENCIL	STATE PROJECT	FEDERAL PROJECT	SHEET NO.
82251 F C16	82251	I-75-1(45)123	413

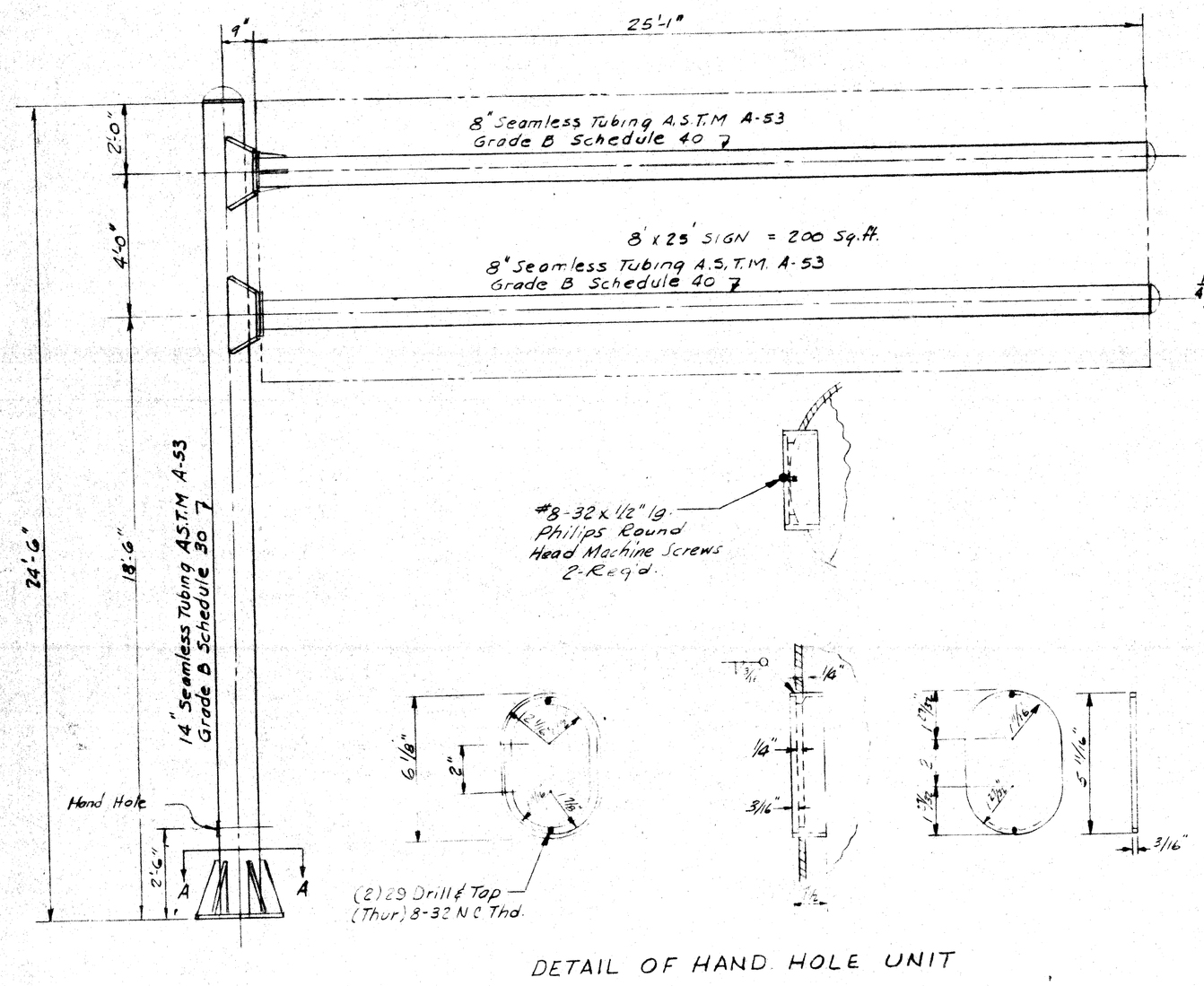

DETAIL OF HAND HOLE UNIT

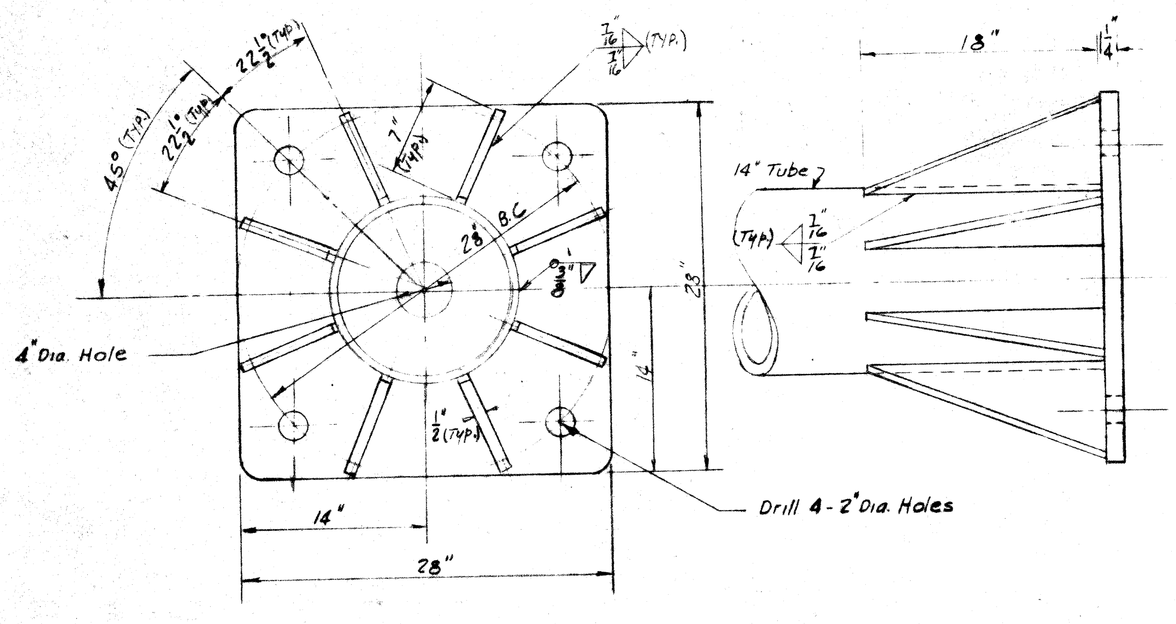

SECTION A-A

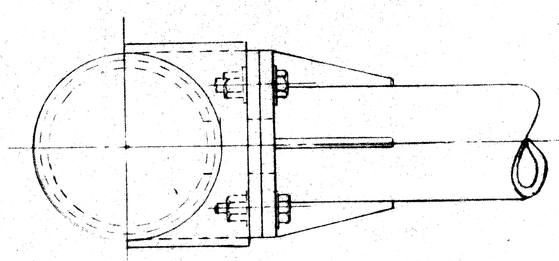

PLAN

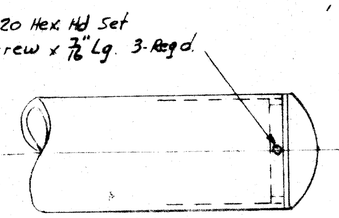

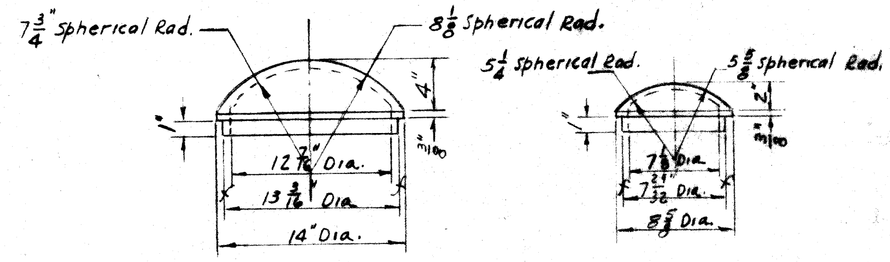

MAST CAP (CAST IRON) 1-REQ'D

ARM CAP (CAST IRON) 2-REQ'D

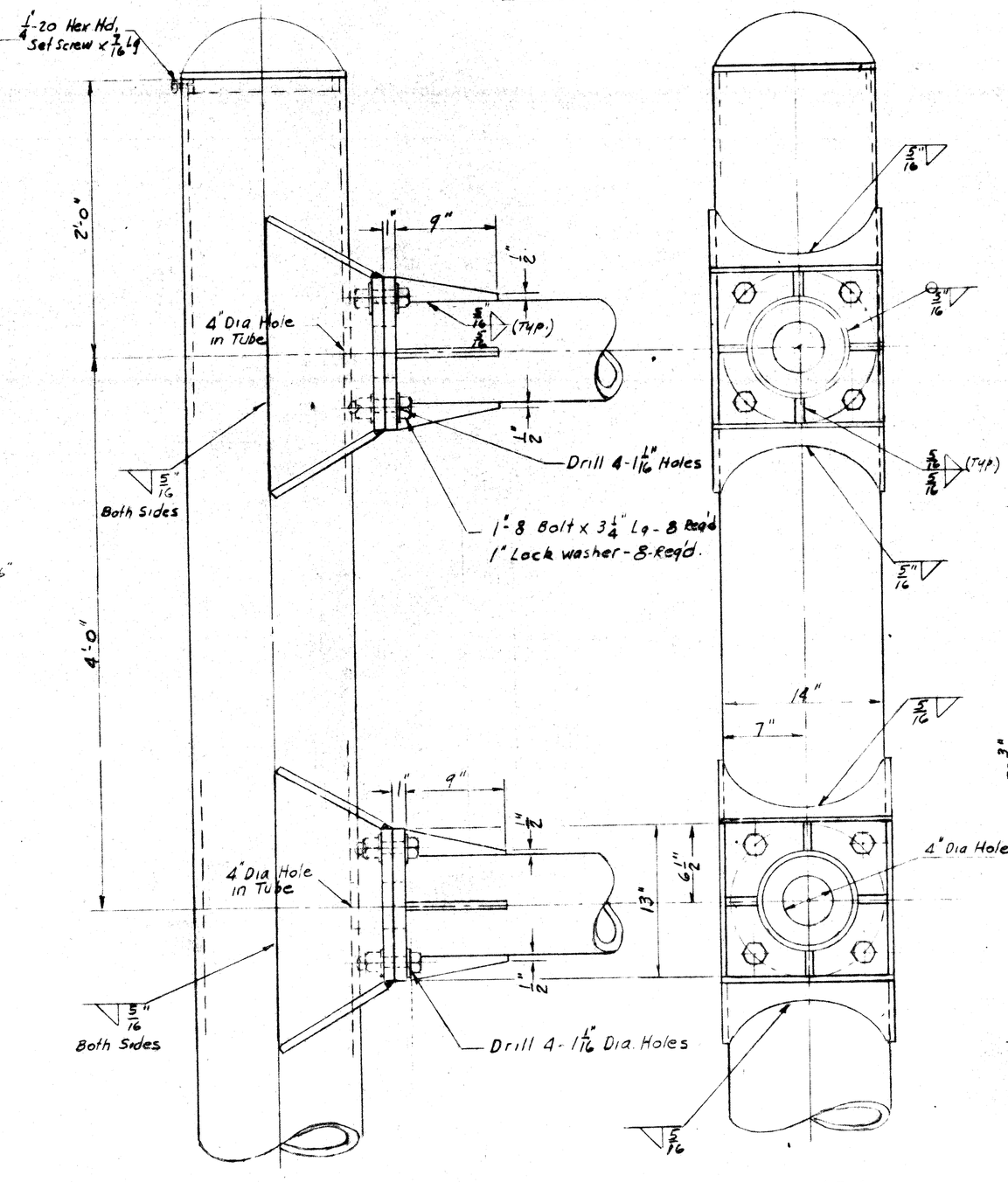

ELEVATION

END VIEW

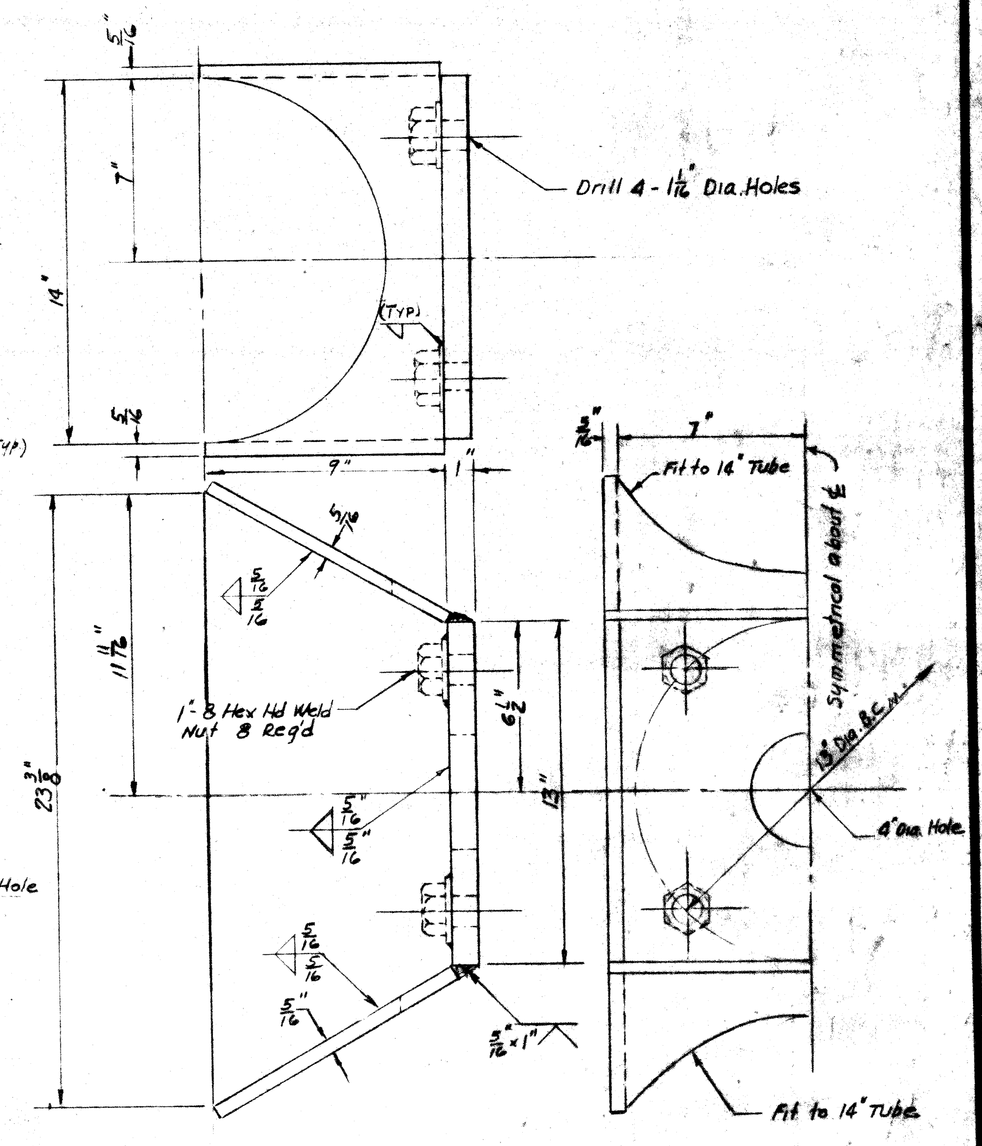

DETAIL OF BRACKET

MICHIGAN STATE HIGHWAY DEPARTMENT

CANTILEVER SIGN SUPPORT

STRUCTURE - TYPE D

REVISIONS

NO.	DESCRIPTION	DATE	BY
1	Detail of Hand Hole Unit	1-12-60	Silver

SQUAD BOSS	Ryerman	7-1-60
DRAWN BY	K.D.D.	5-13-59
TRACED BY		
CHECKED BY	T.H.	5-18-59
SHEET	414 OF ?	

82251 FC16

SS-53C

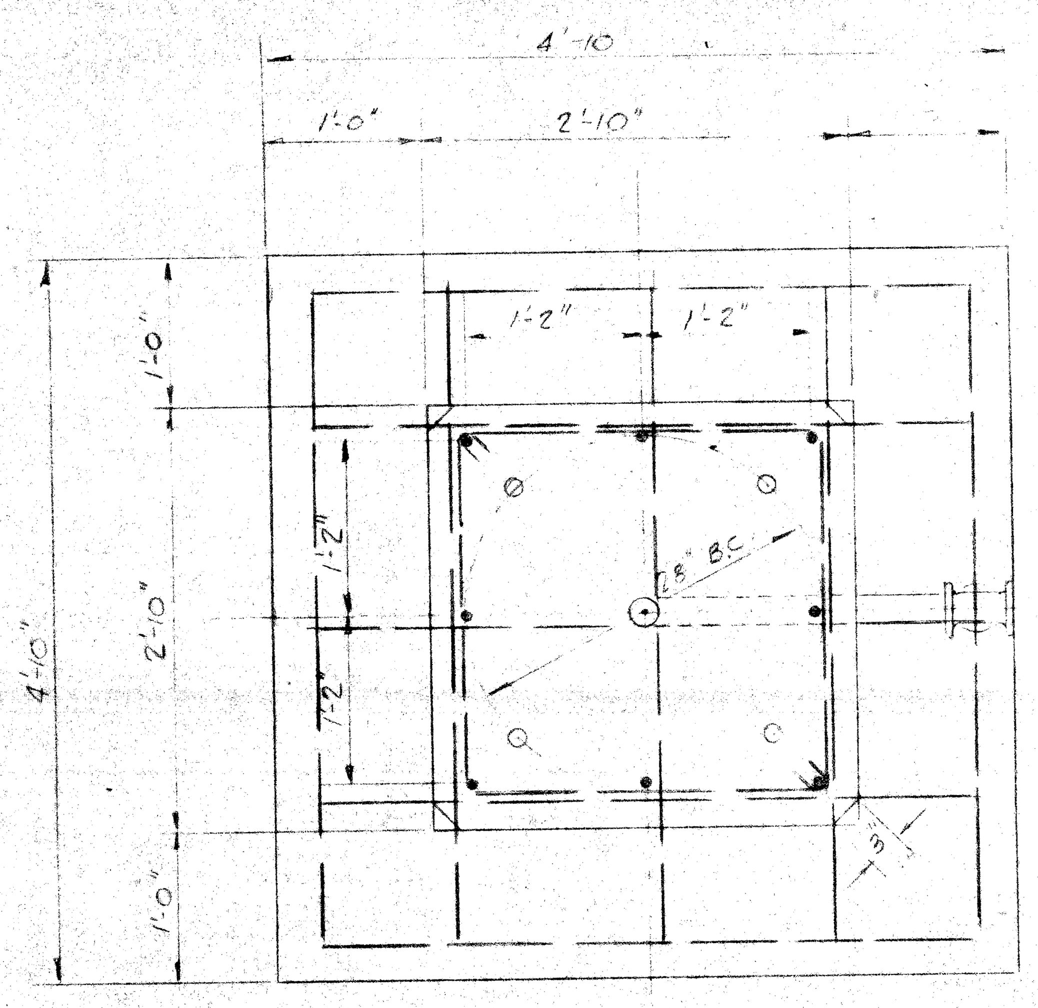

PLAN

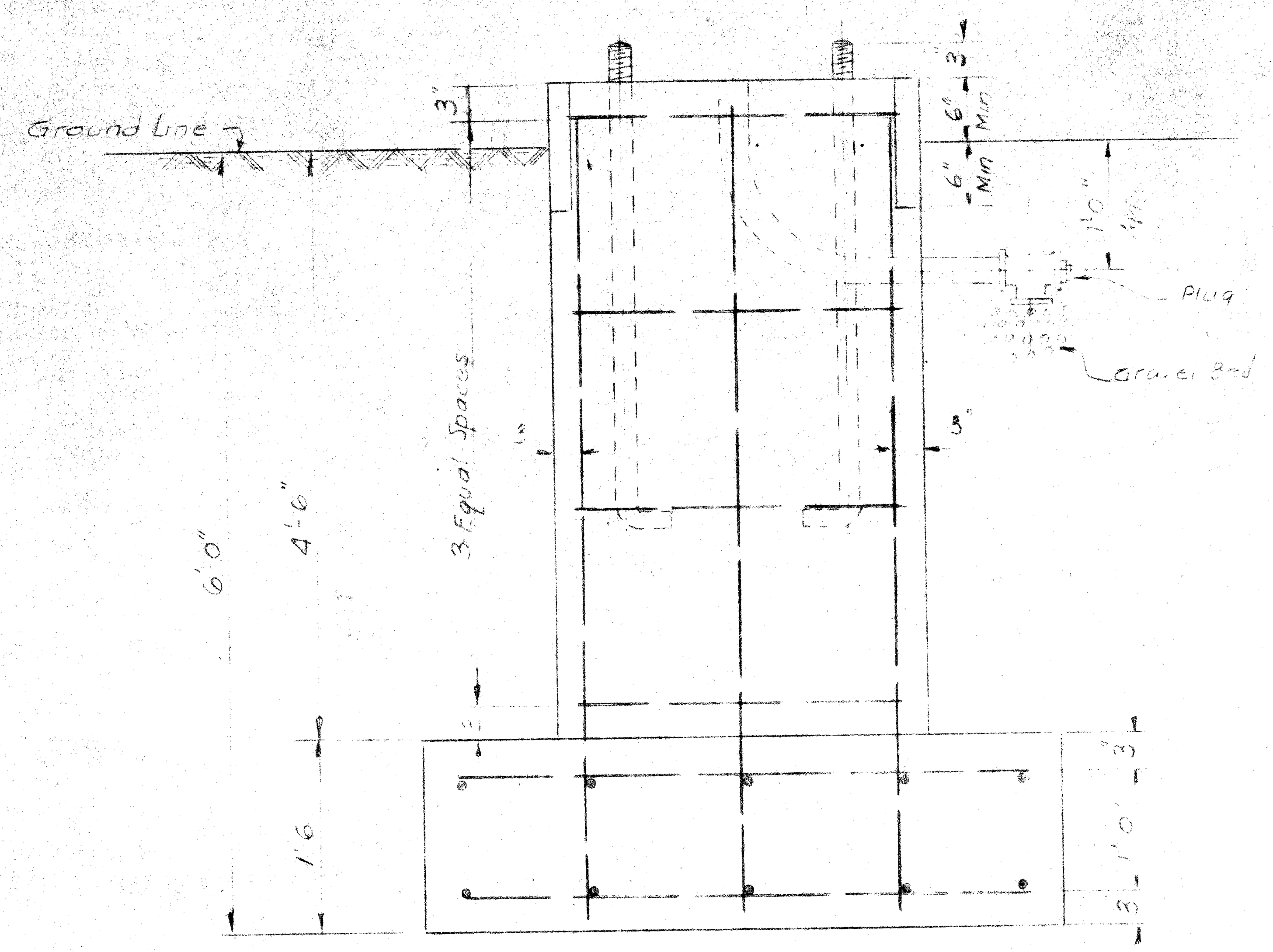

SIDE ELEVATION

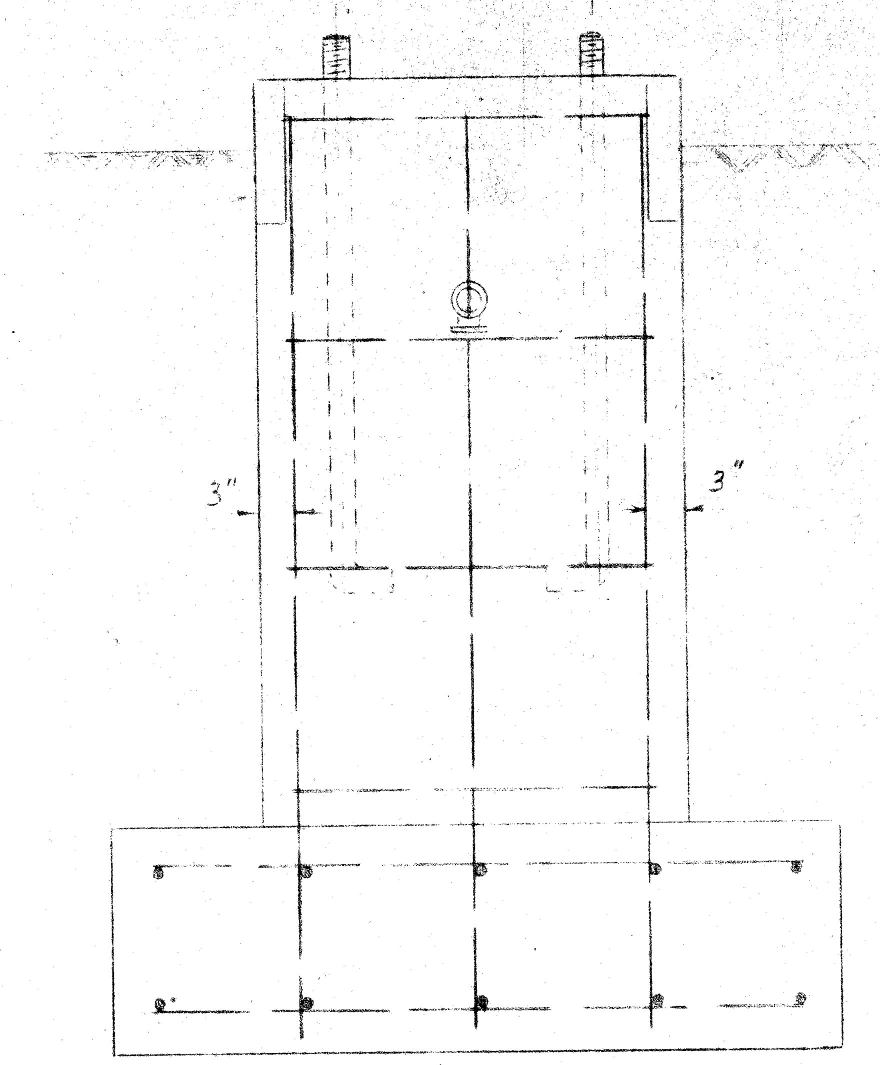

END ELEVATION

STEEL REINFORCEMENT		
SIZE	DIMENSION	Nº REQD
½" ø	2'-4"	8
½" ø	4'-4"	20
½" ø	6'-0"	8

2.8 Cu. Yds. Concrete
118 Lbs. Reinforcing Steel
Quantities Based on 6" Min. Ground Clearance.

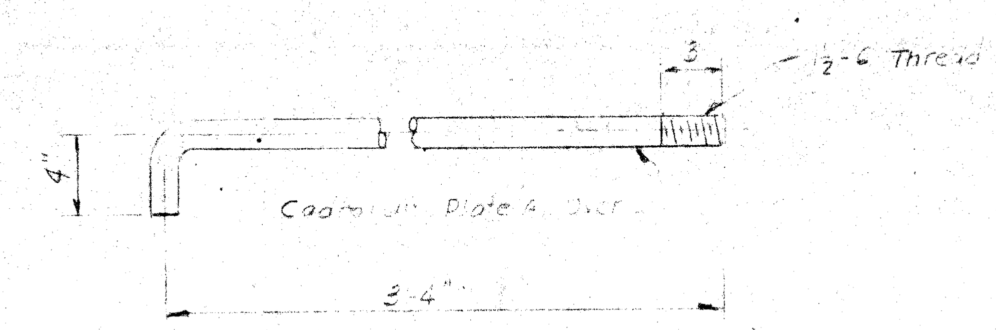

ANCHOR BOLTS WITH NUTS AND [illegible]
4 - REQ'D

NOTE:
[illegible] Sweep Bend 2" Rigid Galv. Conduit, 12" Radius, 2'-6" Min. Length for Wire Entrance [illegible] Roadway Side of Base. Cut [illegible] Flush with Top of Base after [illegible] Begin Be[illegible] from [illegible]

MICHIGAN STATE HIGHWAY DEPARTMENT
STANDARD PLANS FOR
HIGHWAY SIGNS AND SUPPORTS

OFFICES OF ENGINEERING, CONSTRUCTION, MAINTENANCE
APPROVED ____ CONSTRUCTION ENGINEER ____ DATE
APPROVED ____ MAINTENANCE ENGINEER ____ DATE
APPROVED ____ CHIEF OF DESIGN ____ DATE

STATE HIGHWAY DEPARTMENT APPROVAL
APPROVED JOHN C. MACKIE, STATE HIGHWAY COMMISSIONER
BY ____ DIRECTOR OF ENGINEERING & CHIEF ENGINEER ____ DATE
____ APPROVED BY BUREAU OF PUBLIC ROADS ____ DATE

DESIGN AND TRAFFIC DIVISIONS
CHECKED ____ ENGINEER OF TRAFFIC OPERATIONS ____ DATE
RECOMMENDED FOR APPROVAL ____ ENGINEER OF BRIDGE AND ROAD DESIGN ____ DATE
RECOMMENDED FOR APPROVAL ____ DIRECTOR OF TRAFFIC DIVISION ____ DATE

MICHIGAN STATE HIGHWAY DEPARTMENT, JOHN C. MACKIE, COMMISSIONER, TRAFFIC DIVISION	CONCRETE BASE FOR CANTILEVER SIGN [illegible]	AUTH. NO.	DRAWN E.O.W.
		CONT. SEC.	DATE 1-28-[illegible]
		REF.	SCALE
		SHEET 1 OF 1	PLAN SF-64

SS-53 D

FILE NO. USE NO. 350 STENCIL — 82251 F C16

STATE PROJECT	FEDERAL PROJECT	SHEET NO.
82251	I-75-1(43)53	4/5

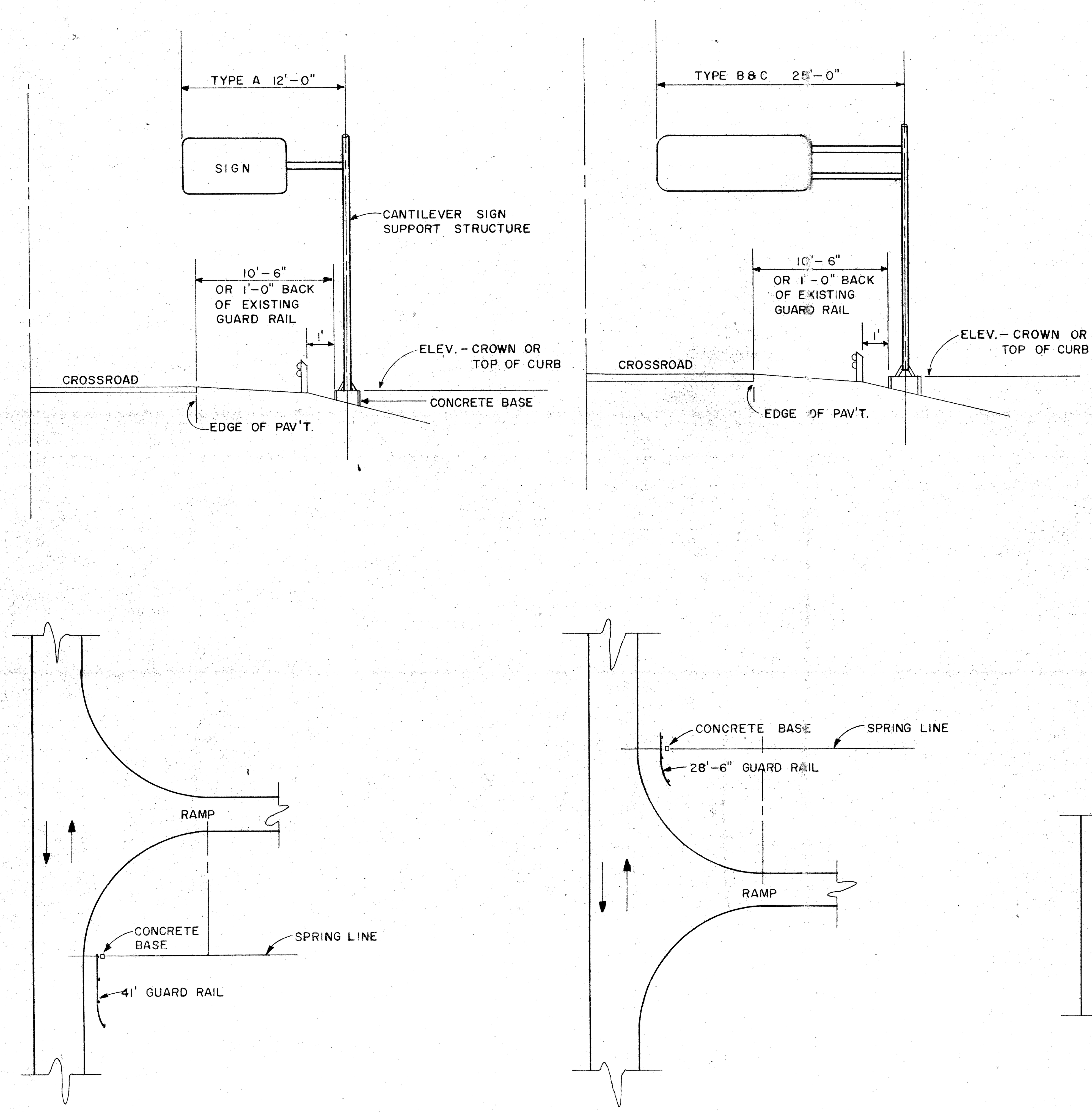

CROSSROAD INSTALLATION

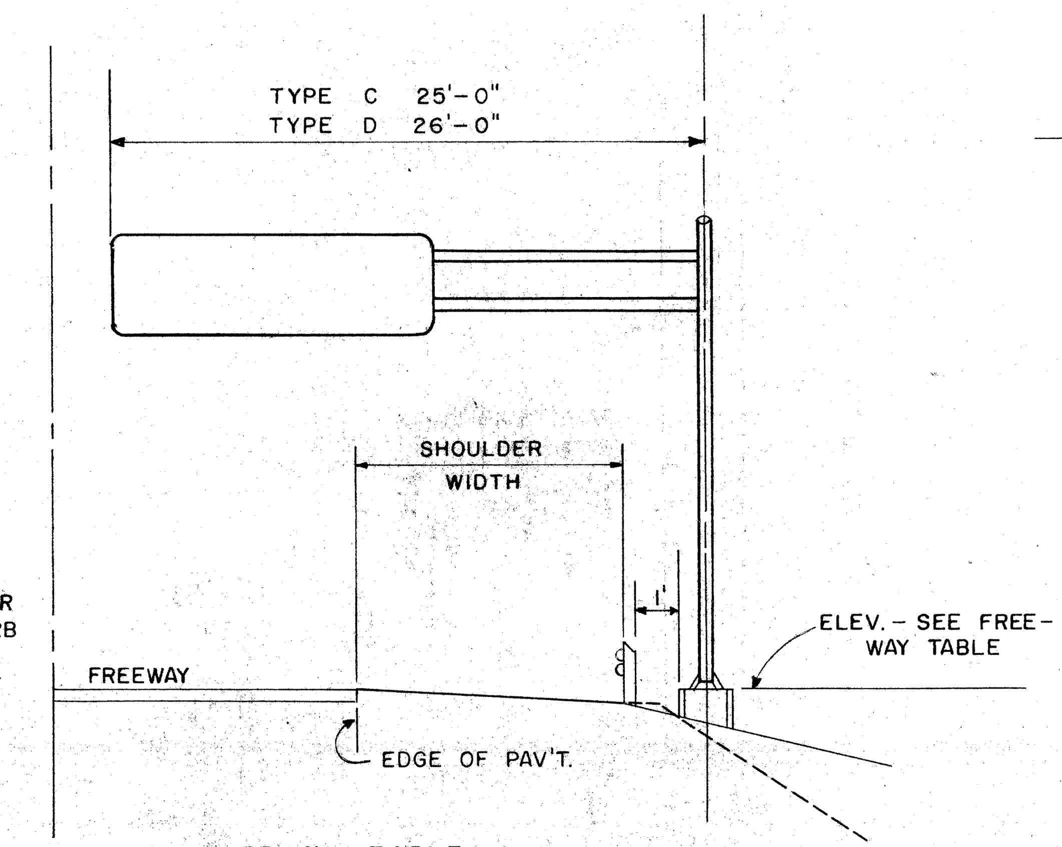

FREEWAY TABLE

SIGN HEIGHT	BASE HEIGHT ABOVE CROWN OR TOP OF CURB TYPE C	TYPE D
4'-0"	0'-0"	0'-0"
4'-6"	0'-3"	0'-0"
5'-0"	0'-6"	0'-0"
5'-6"	0'-9"	0'-0"
6'-0"	1'-0"	0'-0"
6'-6"	1'-3"	0'-0"
7'-0"	1'-6"	0'-0"
7'-6"	1'-9"	0'-0"
8'-0"	2'-0"	0'-0"
8'-6"	2'-3"	0'-3"
9'-0"	2'-6"	0'-6"

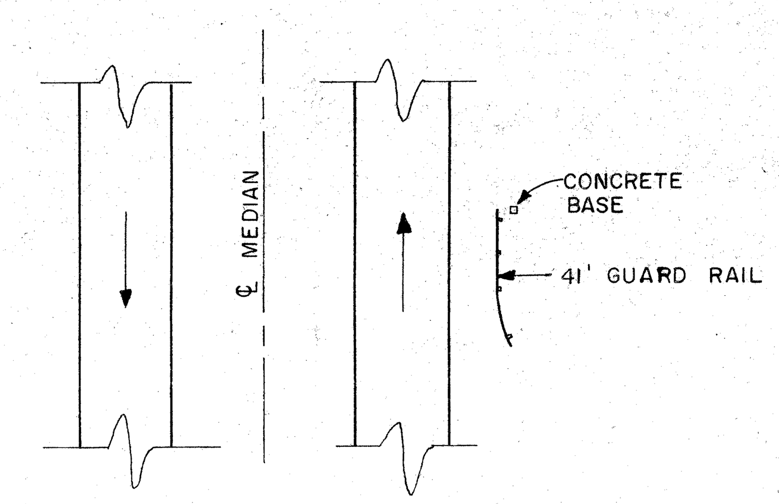

FREEWAY INSTALLATION

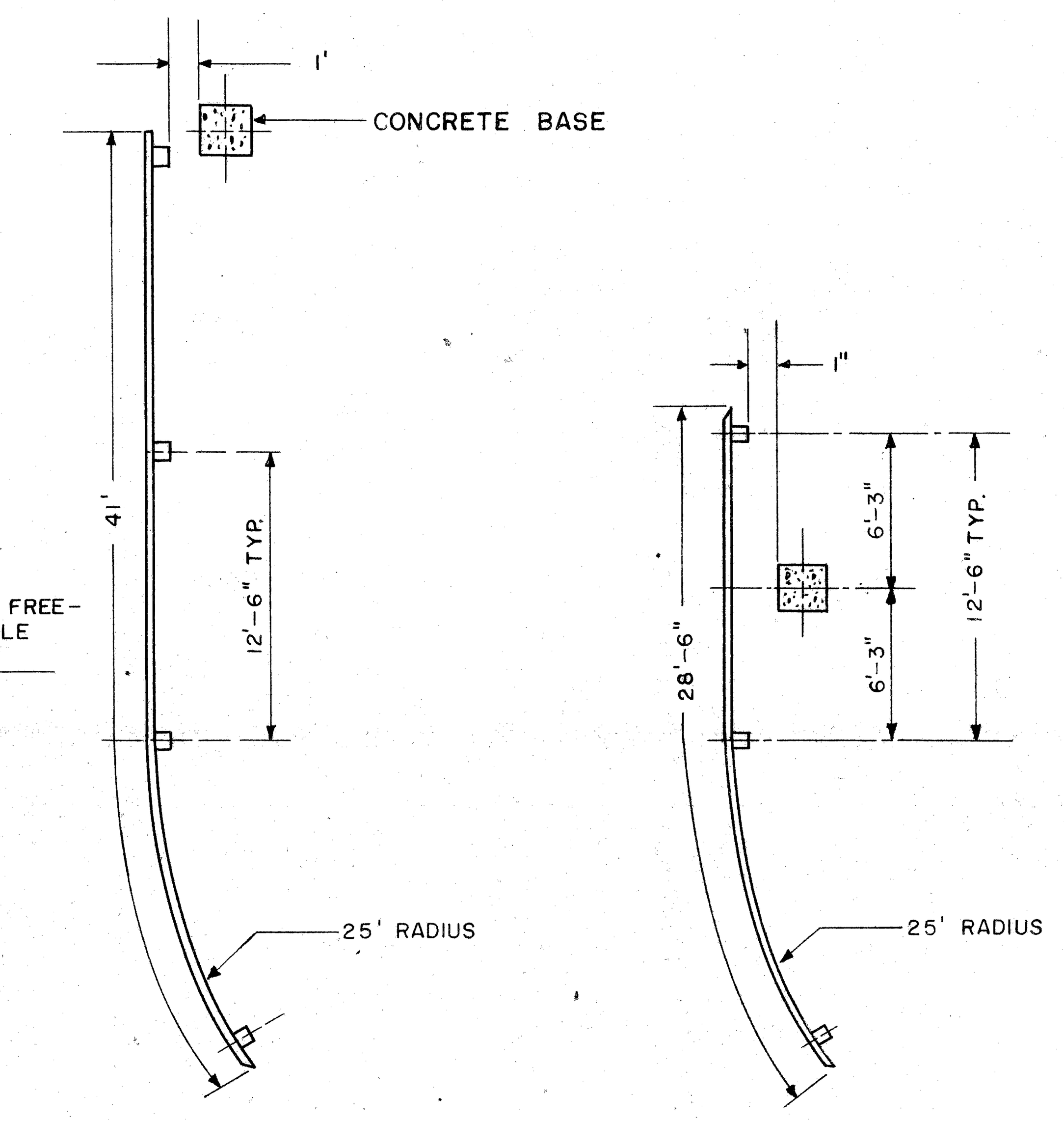

GUARD RAIL

GENERAL NOTES

1. See drawing No. SF-64 for concrete base.
2. See drawing No. SF-46 for sign attachment.
3. See the following drawing Nos. for Cantilever Sign Support Structures.
   Type A, see SF-61
   Type B, see SF-62
   Type C, see SF-37
   Type D, see SF-63
4. See STD. E-4-A-137-C for Guard Rail Installation.
5. Where straight curb exists no guard rail shall be installed.

LOCATION OF SIGN, BASE & GUARD RAIL FOR CANTILEVER SIGN SUPPORT STRUCTURE	AUTH. NO.		DRAWN H.J.B.
	CONT. SEC.		DATE 4-27-61
	REF.		SCALE NONE
	SHEET OF		PLAN SF-47

Rev. July 1961
REVISED MAY 1961

MICHIGAN STATE HIGHWAY DEPARTMENT

STANDARD PLANS FOR HIGHWAY SIGNS AND SUPPORTS

DESIGN AND TRAFFIC DIVISIONS

CHECKED ______ ENGINEER OF TRAFFIC OPERATIONS ______ DATE

RECOMMENDED FOR APPROVAL ______ ENGINEER OF BRIDGE AND ROAD DESIGN ______ DATE

RECOMMENDED FOR APPROVAL ______ DIRECTOR OF TRAFFIC DIVISION ______ DATE

OFFICES OF ENGINEERING, CONSTRUCTION, MAINTENANCE

APPROVED ______ CONSTRUCTION ENGINEER ______ DATE

APPROVED ______ MAINTENANCE ENGINEER ______ DATE

APPROVED ______ CHIEF OF DESIGN ______ DATE

STATE HIGHWAY DEPARTMENT APPROVAL

APPROVED JOHN C. MACKIE, STATE HIGHWAY COMMISSIONER

BY ______ DIRECTOR OF ENGINEERING & CHIEF ENGINEER ______ DATE

APPROVED BY BUREAU OF PUBLIC ROADS ______ DATE

SS-54

FILE NO. USE NO. 350 STENCIL	8225I F CI6	STATE PROJECT 8225I	FEDERAL PROJECT I75-1(43)53	SHEET NO. 4/6

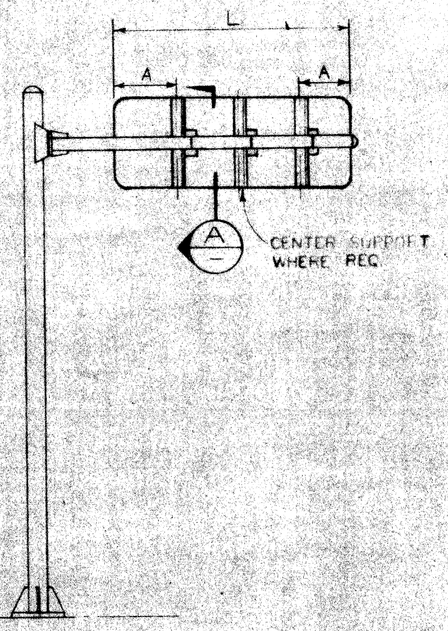

ELEVATION
TYPE A

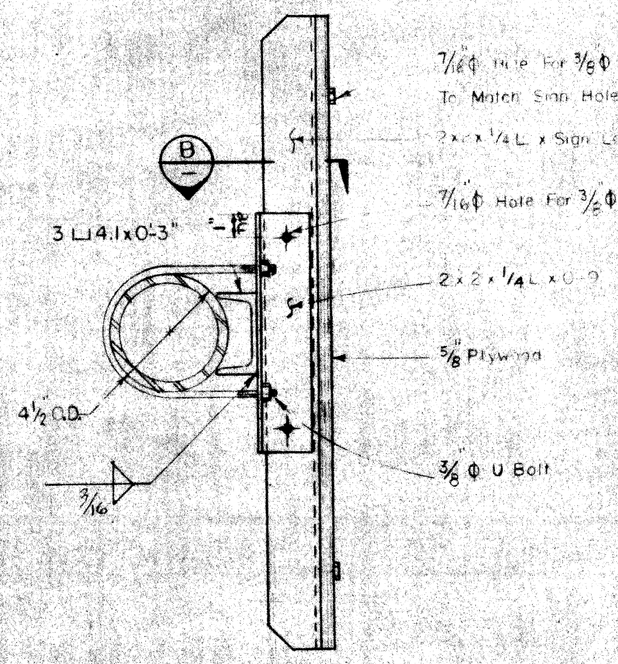

SECTION (A)
(Typ 2 or 3 places)

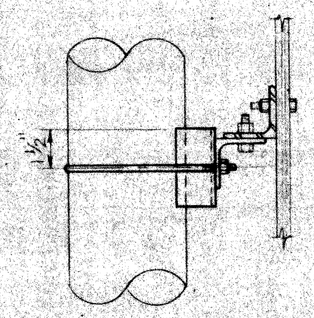

SECTION (B)

ANGLE SIZE			
Sign Height "H"	Type B	Type C	Type D
3' - 6"	3x2x1/4	3x2x1/4	
4' - 0"	"	"	3x2x1/4
4' - 6"	"	"	"
5' - 0"	"	"	"
5' - 6"	"	"	"
6' - 0"	"	"	"
6' - 6"	"	"	"
7' - 0"	3 1/2 x 2 1/2 x 5/16	"	"
7' - 6"	"	"	"
8' - 0"	"	3 1/2 x 2 1/2 x 5/16	"
8' - 6"	3 1/2 x 2 1/2 x 3/8	"	"
9' - 0"	"	"	3 1/2 x 2 1/2 x 5/16

SUPPORT SPACE & POSITION on STRUCTURE

TYPE A									
L	5'	6	7	8	9	10	11	12	
A	0'-10"	1'-0	1'-2"	1'-4"	1'-6"	1'-8"	1'-10"	2'-0	
	PLYWD. 2 SUPRT		PLYWOOD 3 SUPPORTS						

TYPE B								
L	8'	10	12	14	16	18	20	22
A	2'-0	2'-0	2'-6"	3'-0	3'-0	3'-6"	4'-0	4'-6"
B	6"	6"	6"	6"	6"	6	6	6"

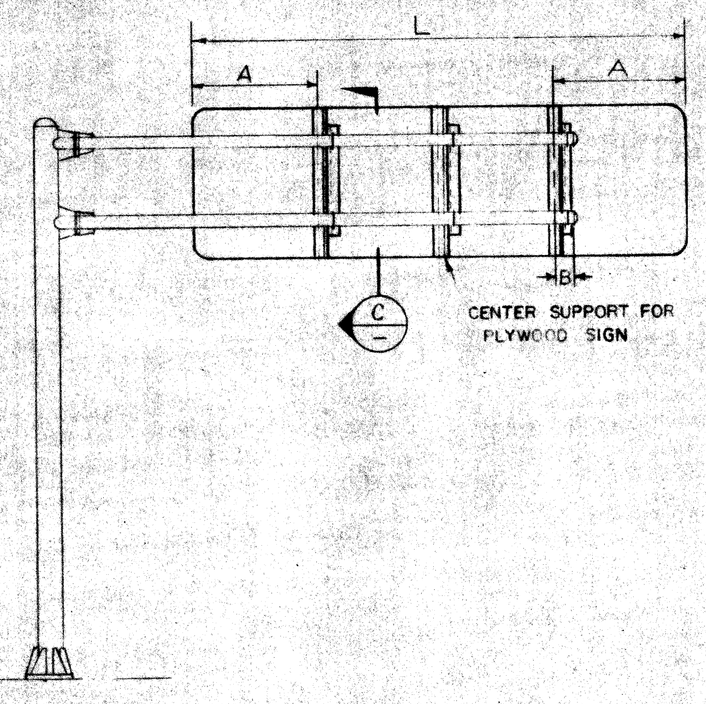

ELEVATION
TYPE B,C,D

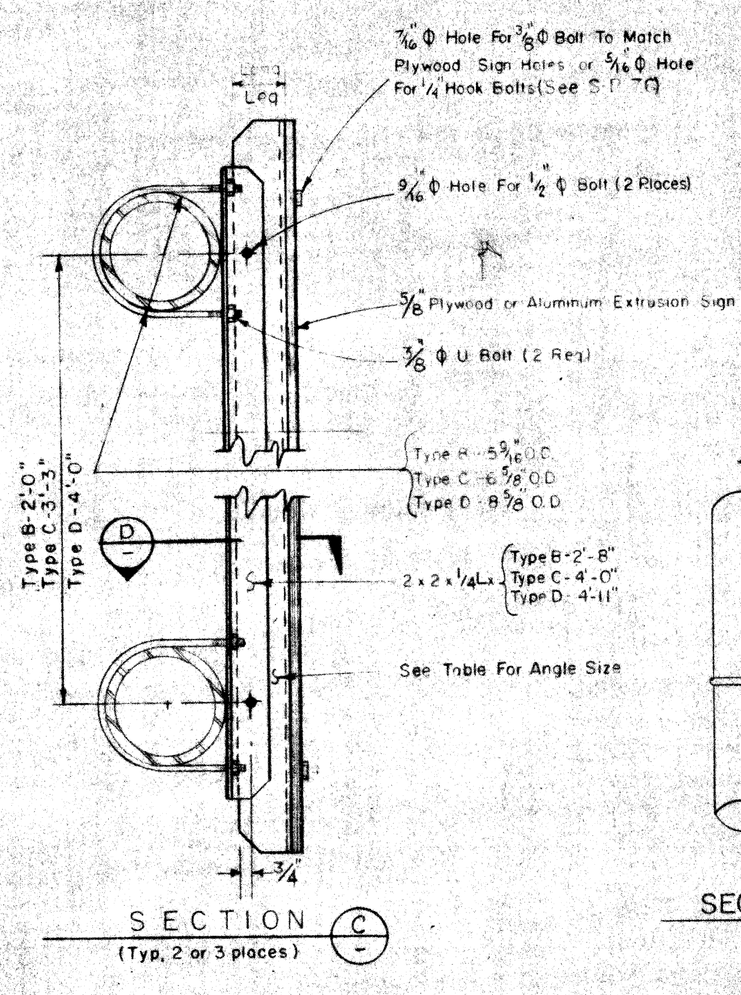

SECTION (C)
(Typ. 2 or 3 places)

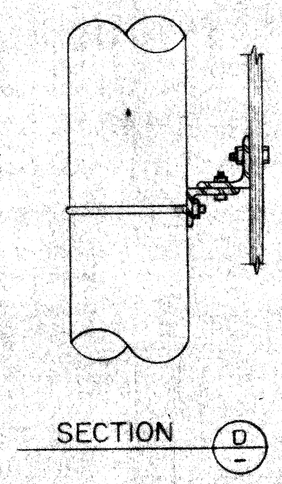

SECTION (D)

TYPE C									
L	8	10	12	14	16	18	20	22	24
A	2'-0	2'-0	2'-6"	3'-0	3'-0	3'-6"	4'-0	4'-6"	5'-0
B	6	6"	6	6	6	6"	6"	1'-0	1'-6"

TYPE D								
L	14	16	18	20	22	24	26	
A	3'-0	3'-0	3'-6"	4'-0	4'-6"	5'-0	5'-0	
B	2'-10"	2'-10	3'-4"	3'-10	4'-4"	4'-10	4'-10	

Revised: Sept. 1960

MICHIGAN STATE HIGHWAY DEPARTMENT JOHN C. MACKIE COMMISSIONER TRAFFIC DIVISION	SIGN ATTACHMENT C.N. STEEL CANTILEVER	AUTH. NO.	DRAWN AGW
		CONT. SEC.	DATE 9-14-61
		JOB	SCALE None
		SHEET OF	PLAN SF-46

OFFICES OF ENGINEERING, CONSTRUCTION, MAINTENANCE

APPROVED _____ CONSTRUCTION ENGINEER _____ DATE

APPROVED _____ MAINTENANCE ENGINEER _____ DATE

APPROVED _____ CHIEF OF DESIGN _____ DATE

BY _____ DIRECTOR OF ENGINEERING & CHIEF ENGINEER _____ DATE

STATE HIGHWAY DEPARTMENT APPROVAL

APPROVED JOHN C. MACKIE, STATE HIGHWAY COMMISSIONER

APPROVED BY BUREAU OF PUBLIC ROADS _____ DATE

MICHIGAN STATE HIGHWAY DEPARTMENT

STANDARD PLANS FOR

HIGHWAY SIGNS AND SUPPORTS

DESIGN AND TRAFFIC DIVISIONS

CHECKED _____ ENGINEER OF TRAFFIC OPERATIONS _____ DATE

RECOMMENDED FOR APPROVAL _____ ENGINEER OF BRIDGE AND ROAD DESIGN _____ DATE

RECOMMENDED FOR APPROVAL _____ DIRECTOR OF TRAFFIC DIVISION _____ DATE

SS-55

FILE NO. USE THIS NO. IN CORRESPONDENCE	STATE PROJECT	FEDERAL PROJECT	SHEET NO.
82251 F C16	82251	FSH 4933	47

DESIGN AND TRAFFIC DIVISIONS

CHECKED — ENGINEER OF TRAFFIC OPERATIONS — DATE
RECOMMENDED FOR APPROVAL — ENGINEER OF BRIDGE AND ROAD DESIGN — DATE
RECOMMENDED FOR APPROVAL — DIRECTOR OF TRAFFIC DIVISION — DATE

MICHIGAN STATE HIGHWAY DEPARTMENT

STANDARD PLANS FOR

HIGHWAY SIGNS AND SUPPORTS

OFFICES OF ENGINEERING, CONSTRUCTION, MAINTENANCE

APPROVED — CHIEF OF DESIGN — DATE
APPROVED — MAINTENANCE ENGINEER — DATE
APPROVED — CONSTRUCTION ENGINEER — DATE

STATE HIGHWAY DEPARTMENT APPROVAL

APPROVED JOHN C. MACKIE, STATE HIGHWAY COMMISSIONER

BY — DIRECTOR OF ENGINEERING & CHIEF ENGINEER — DATE

APPROVED BY BUREAU OF PUBLIC ROADS — DATE

FILE NO. USE 350 NO. STENCIL | STATE PROJECT 82251 | FEDERAL PROJECT 179/169213 | SHEET NO. 418

82251 F C16

SS-56

50'-60' ALUMINUM OVERHEAD SIGN SUPPORT STRUCTURE TYPE B

AUTH. NO.
REVISIONS 5-27-59 SEPT. 1960 NOV. 1960
DRAWN BY R.R.
DATE 10-3-58
SCALE NONE
SHEET NO. 1 OF 3 | FILE NO. SF-32

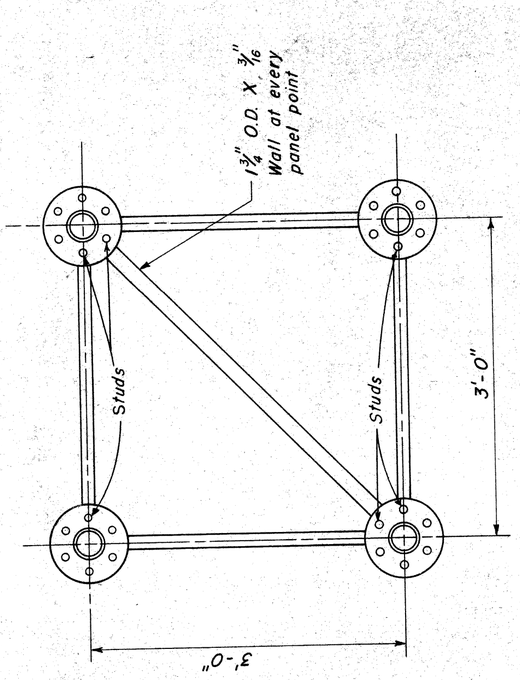

SECTION A-A

¾"-N.C.-10 X 6½" Studs threaded 1¾" from each end placed as indicated - 6 req'd. per casting panel. (2024-T4 Alum. Alloy)

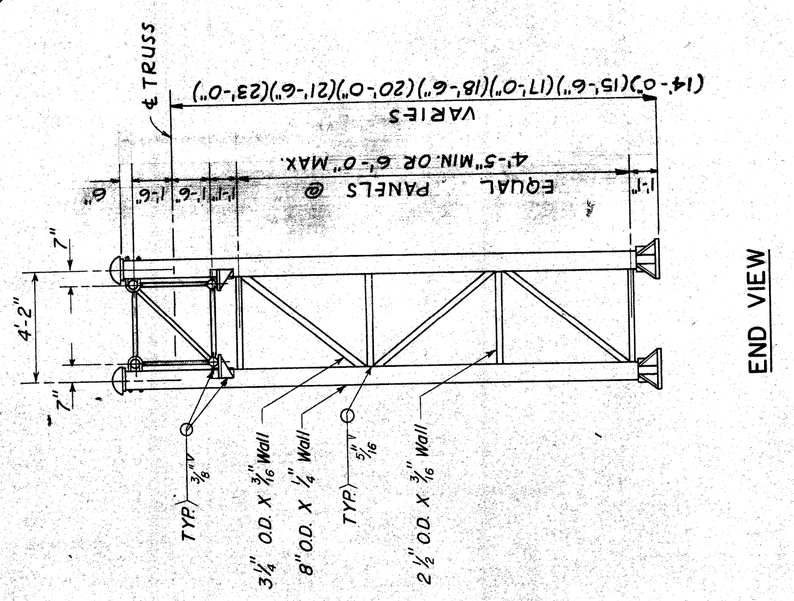

END VIEW

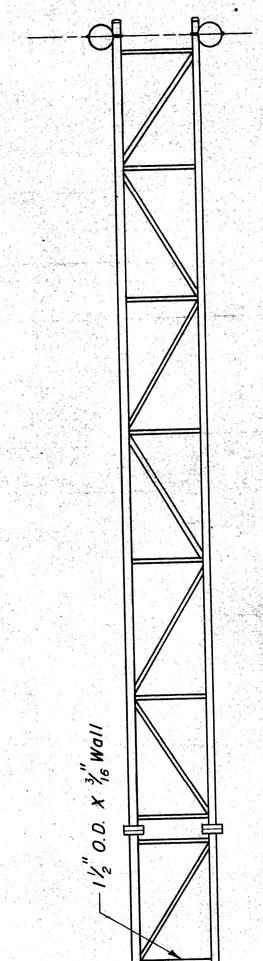

TOP VIEW

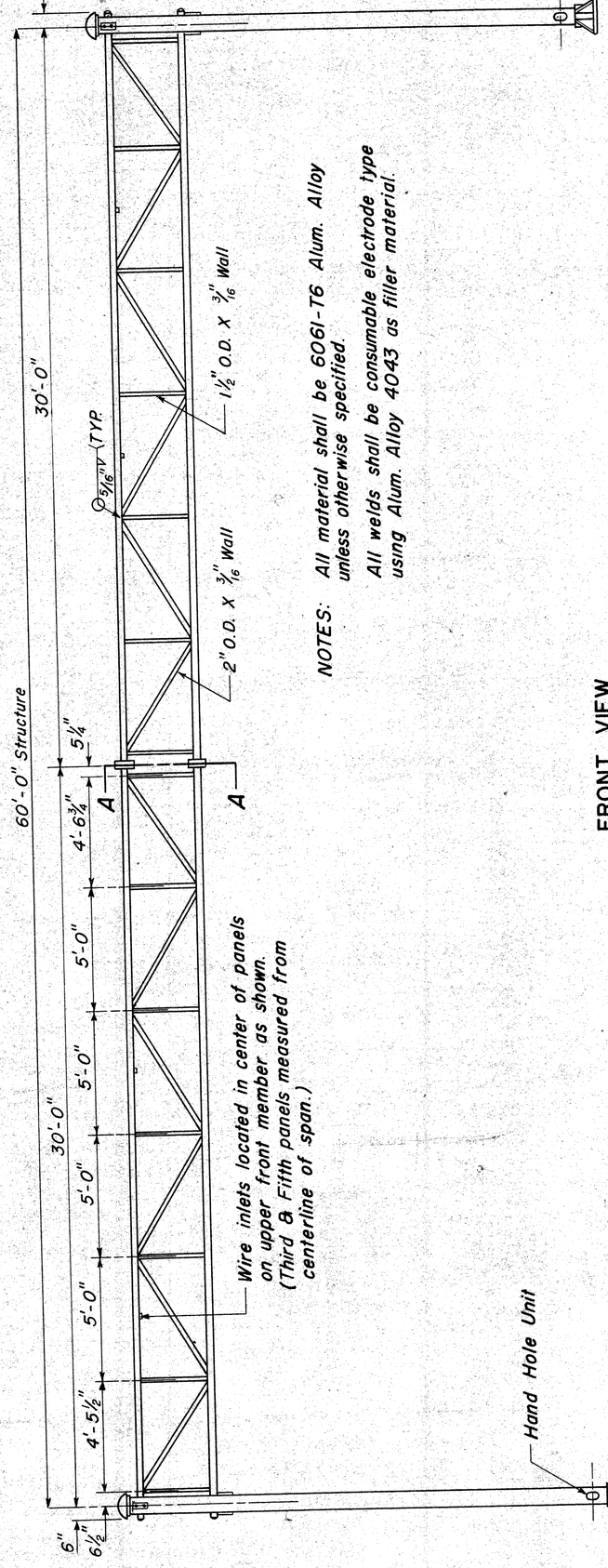

NOTES: All material shall be 6061-T6 Alum. Alloy unless otherwise specified.

All welds shall be consumable electrode type using Alum. Alloy 4043 as filler material.

FRONT VIEW

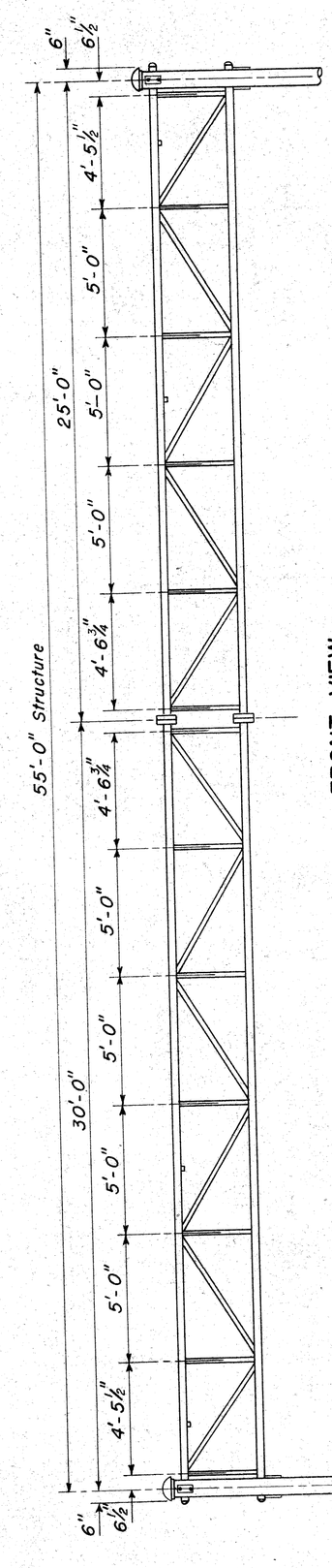

FRONT VIEW

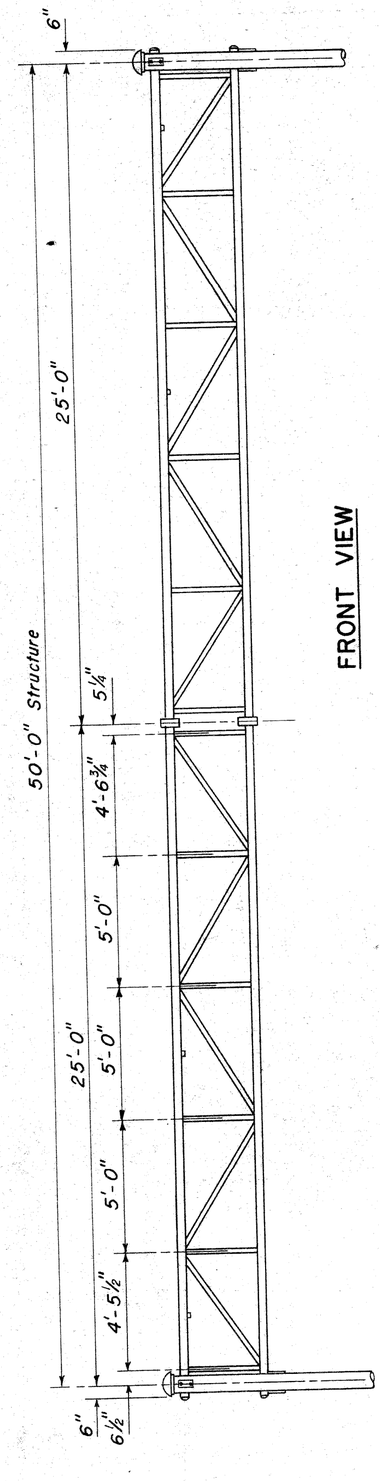

FRONT VIEW

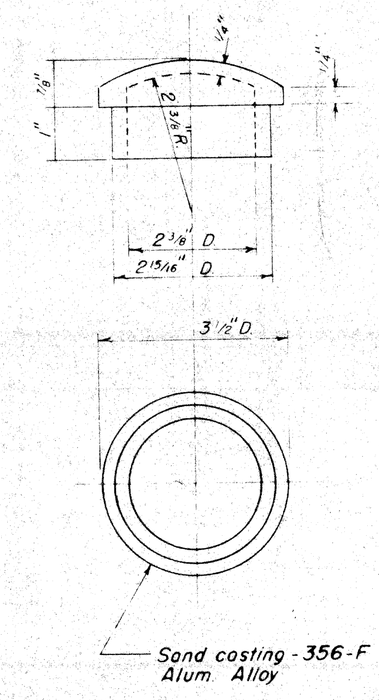

DETAIL OF END CAP

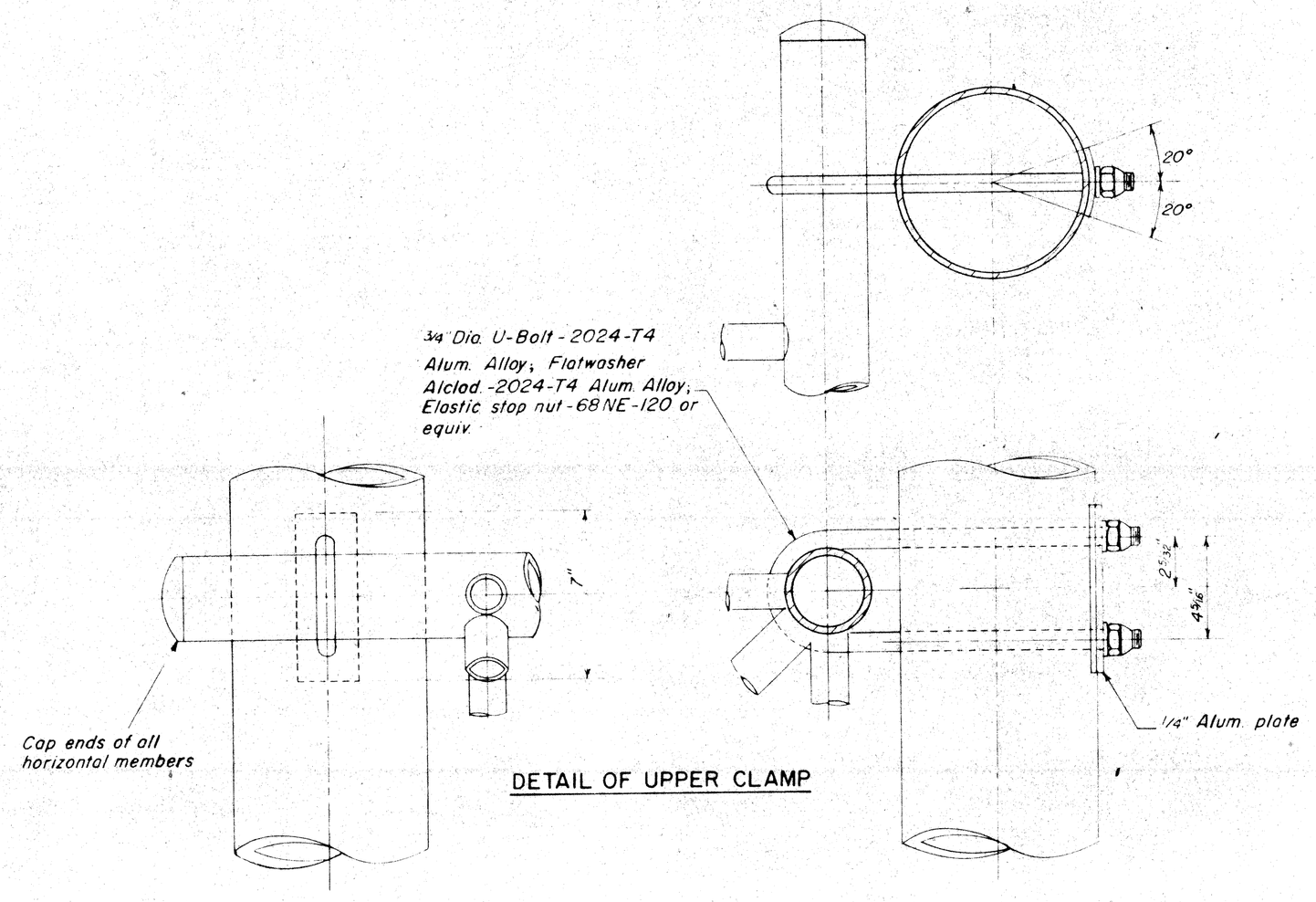

DETAIL OF UPPER CLAMP

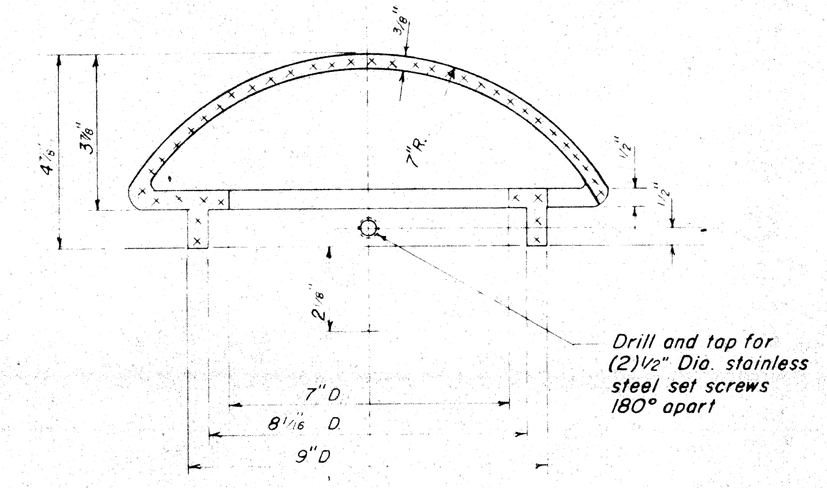

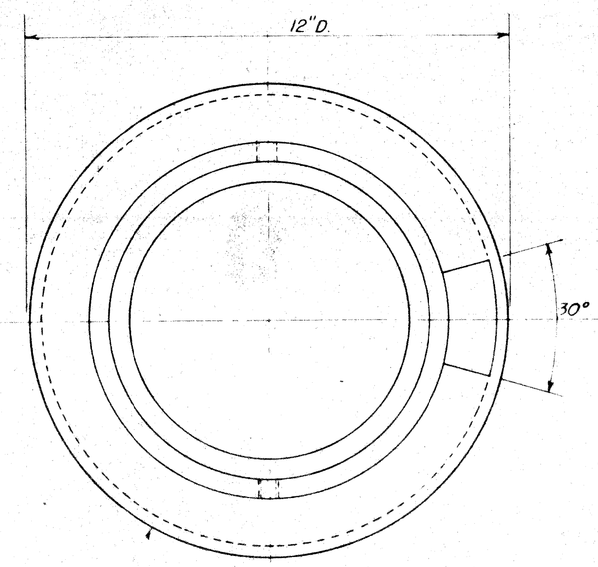

DETAIL OF POLE TOP

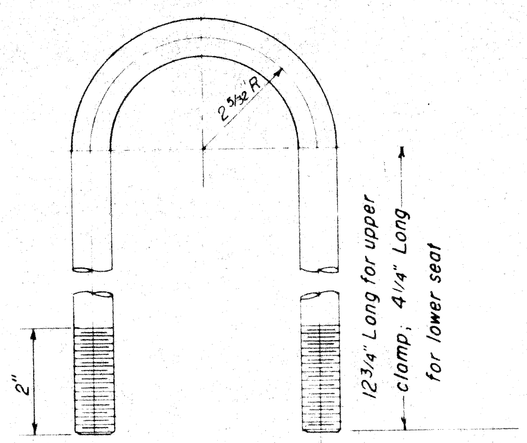

DETAIL OF U-BOLT

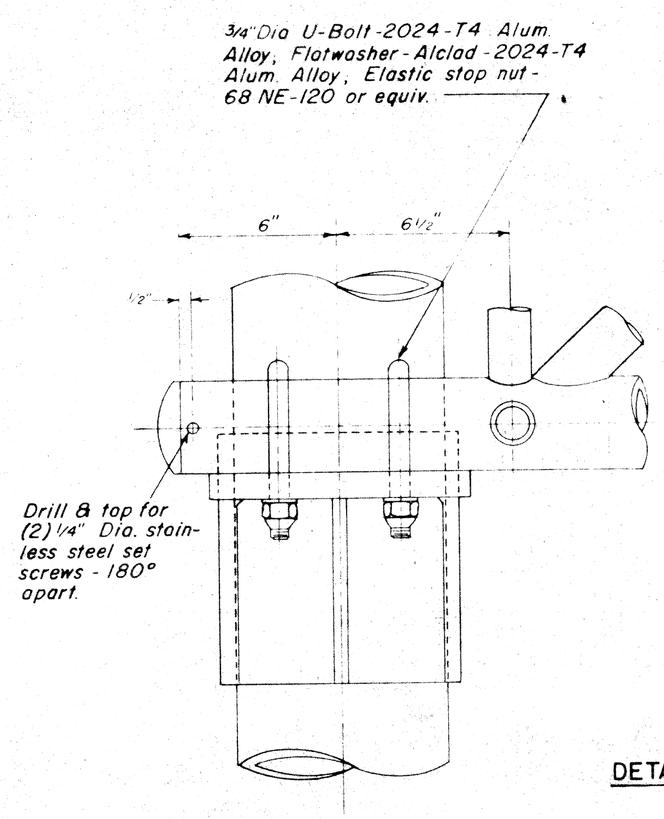

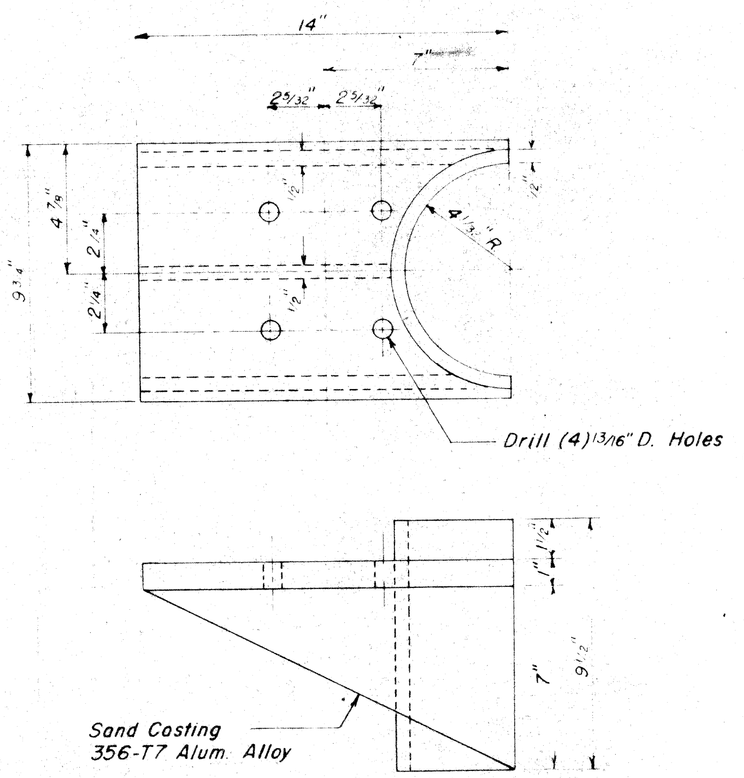

DETAIL OF LOWER SEAT

50'-60' ALUMINUM OVERHEAD SIGN SUPPORT STRUCTURE
TYPE B

AUTH. NO.	DRAWN BY
REVISIONS	DATE
	SCALE
SHEET NO. 2 OF 3	FILE NO. SF-82

OFFICES OF ENGINEERING, CONSTRUCTION, MAINTENANCE

APPROVED _____ CONSTRUCTION ENGINEER — 9-30-59 DATE

APPROVED _____ MAINTENANCE ENGINEER — 8-31-59 DATE

APPROVED _____ CHIEF ENGINEER — 10-1-59 DATE

STATE HIGHWAY DEPARTMENT APPROVAL

APPROVED JOHN C. MACKIE, STATE HIGHWAY COMMISSIONER

BY _____ DIRECTOR OF ENGINEERING — 10-1-59 DATE

APPROVED BY BUREAU OF PUBLIC ROADS _____ DATE

MICHIGAN STATE HIGHWAY DEPARTMENT

STANDARD PLANS FOR

HIGHWAY SIGNS AND SUPPORTS

DESIGN AND TRAFFIC DIVISIONS

CHECKED _____ ENGINEER OF TRAFFIC OPERATIONS — 1-13-58 DATE

RECOMMENDED FOR APPROVAL _____ ENGINEER OF BRIDGE AND ROAD DESIGN — 1-14-58 DATE

RECOMMENDED FOR APPROVAL _____ DIRECTOR OF TRAFFIC DIVISION — 1-15-58 DATE

SS-57

FILE NO. LEAVE BLANK	STATE PROJECT	FEDERAL PROJECT	SHEET NO.
82251 F C16	82251	I-25-1(82)25	4/9

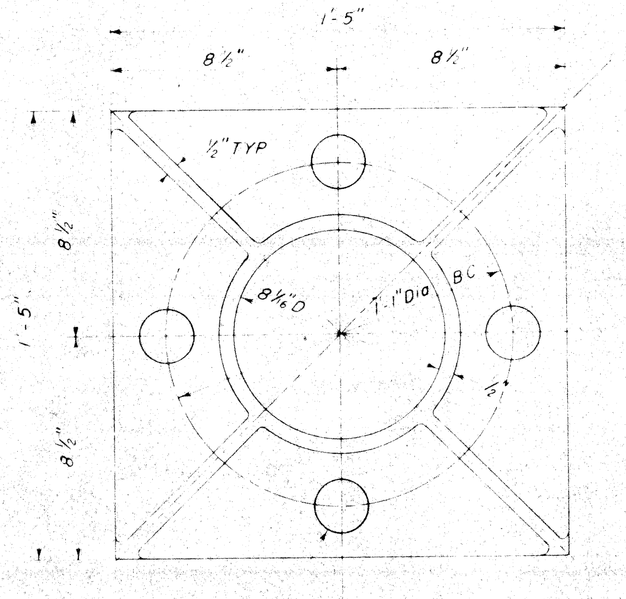

Drill (4) 2" D Holes

¾" x 5" Hex hd bolts - 2024-T4 Alum. Alloy. 18 req'd per casting panel; flatwashers alclad 2024-T4 Alum Alloy - 48 req'd per casting panel; ¾" elastic stop nut 68 NE-120 or equiv - 30 req'd per casting panel

Drill (6) 13/16" Dia holes - each flange

NOTE
Fabricator shall tighten a minimum of (6) ¾" bolts to the breaking point under the same conditions of lubrication that will be encountered during erection, and specify 80% of the lowest torque obtained for tightening nuts. Lubricant shall meet the requirements of military specifications Jan A-669 or equiv.

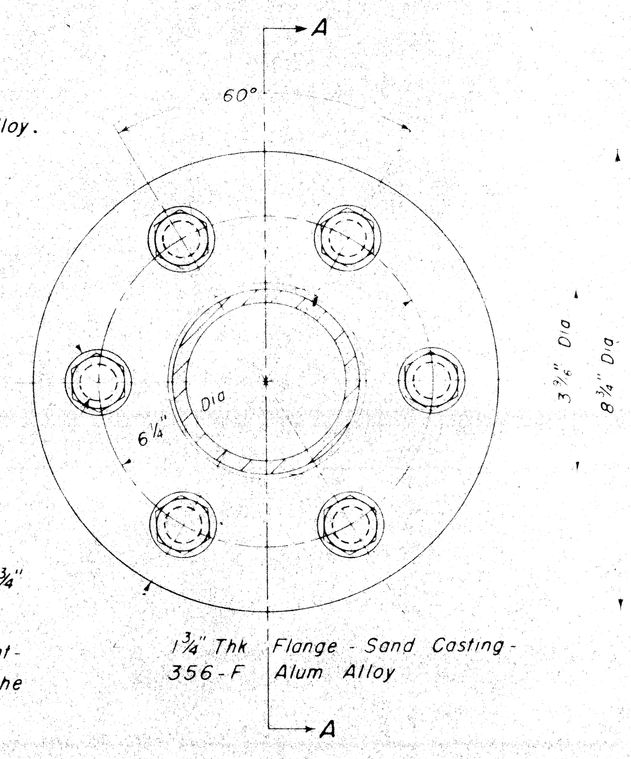

1¾" Thk Flange - Sand Casting - 356-F Alum Alloy

DETAIL OF FLANGE

Plane abutting faces, if necessary, to insure complete contact.

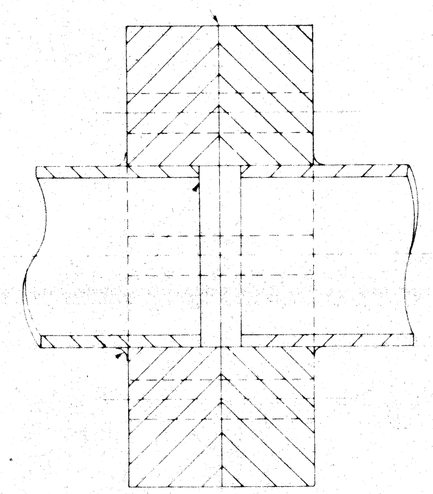

⅜" Continuous fillet weld

SECTION A-A

Sand Casting - 356-F Alum Alloy

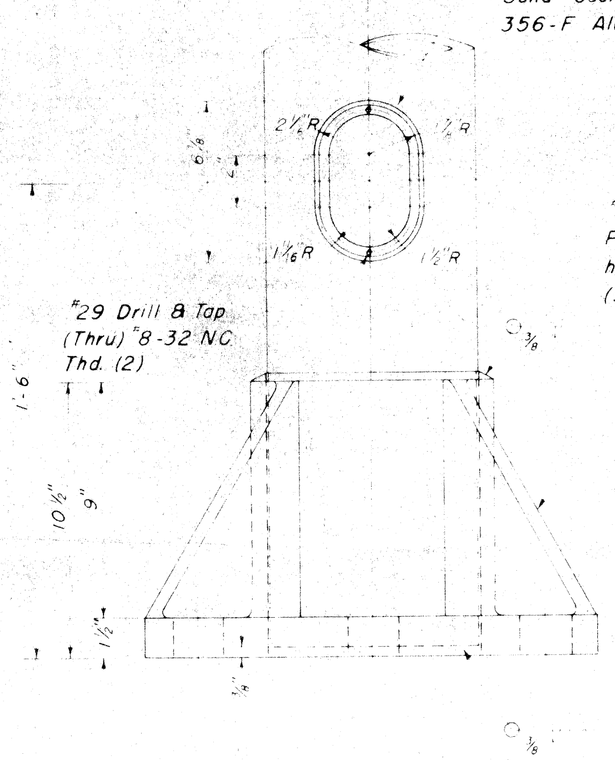

"8-32 x ½" long Phillips hd. round hd machine screws (2) (stainless steel)

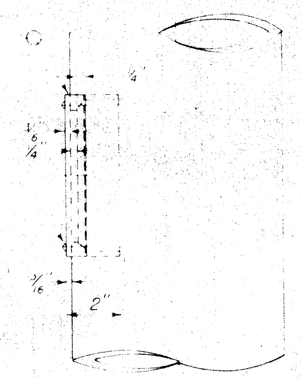

Sand Casting 356-T7 Alum Alloy

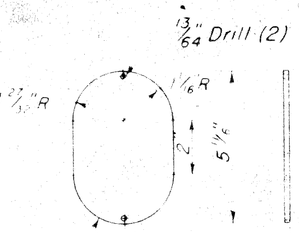

Sand Casting 356-F Alum Alloy

HAND HOLE UNIT COVER

DETAIL OF BASE AND HAND HOLE UNIT

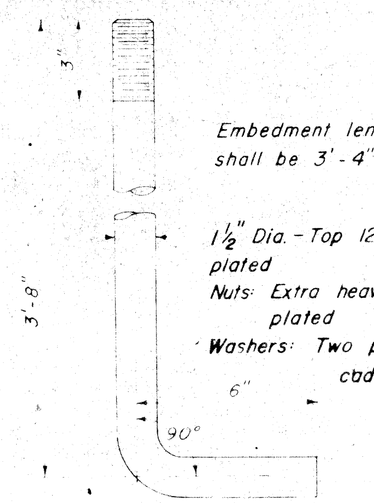

DETAIL OF ANCHOR BOLT

Dr 1" Dia. hole in hor. member

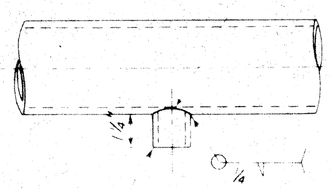

Std 1" nom dia 6061-T6 Alum Alloy pipe

DETAIL OF ELECTRICAL OUTLET

50'-60' ALUMINUM OVERHEAD SIGN SUPPORT STRUCTURE
TYPE B

AUTH NO	DRAWN BY
REVISIONS	DATE
	SCALE
SHEET NO. 3 OF 3	FILE NO. SF-32

OFFICES OF ENGINEERING, CONSTRUCTION, MAINTENANCE

APPROVED: [signature] CONSTRUCTION ENGINEER — 5-30-57 DATE
APPROVED [signature] MAINTENANCE ENGINEER — 8-31-59 DATE
APPROVED [signature] CHIEF ENGINEER — 10-1-59 DATE

STATE HIGHWAY DEPARTMENT APPROVAL

APPROVED JOHN C. MACKIE, STATE HIGHWAY COMMISSIONER
BY [signature] DIRECTOR OF ENGINEERING — 10-1-59 DATE

APPROVED BY BUREAU OF PUBLIC ROADS — DATE

MICHIGAN STATE HIGHWAY DEPARTMENT

STANDARD PLANS FOR HIGHWAY SIGNS AND SUPPORTS

DESIGN AND TRAFFIC DIVISIONS

CHECKED [signature] ENGINEER OF TRAFFIC OPERATIONS — 10-8-57 DATE
RECOMMENDED FOR APPROVAL [signature] ENGINEER OF BRIDGE AND ROAD DESIGN — 10-8-57 DATE
RECOMMENDED FOR APPROVAL [signature] DIRECTOR OF TRAFFIC DIVISION — 10-8-57 DATE

SS-58 | FILE NO. 82251 F C16 | STATE PROJECT 82251 | FEDERAL PROJECT F-5-(19)57 | SHEET NO. 420

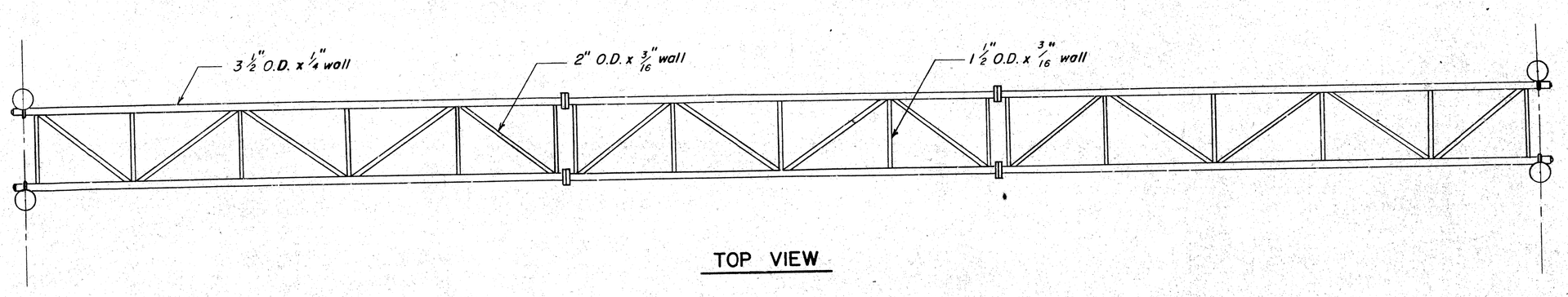

TOP VIEW

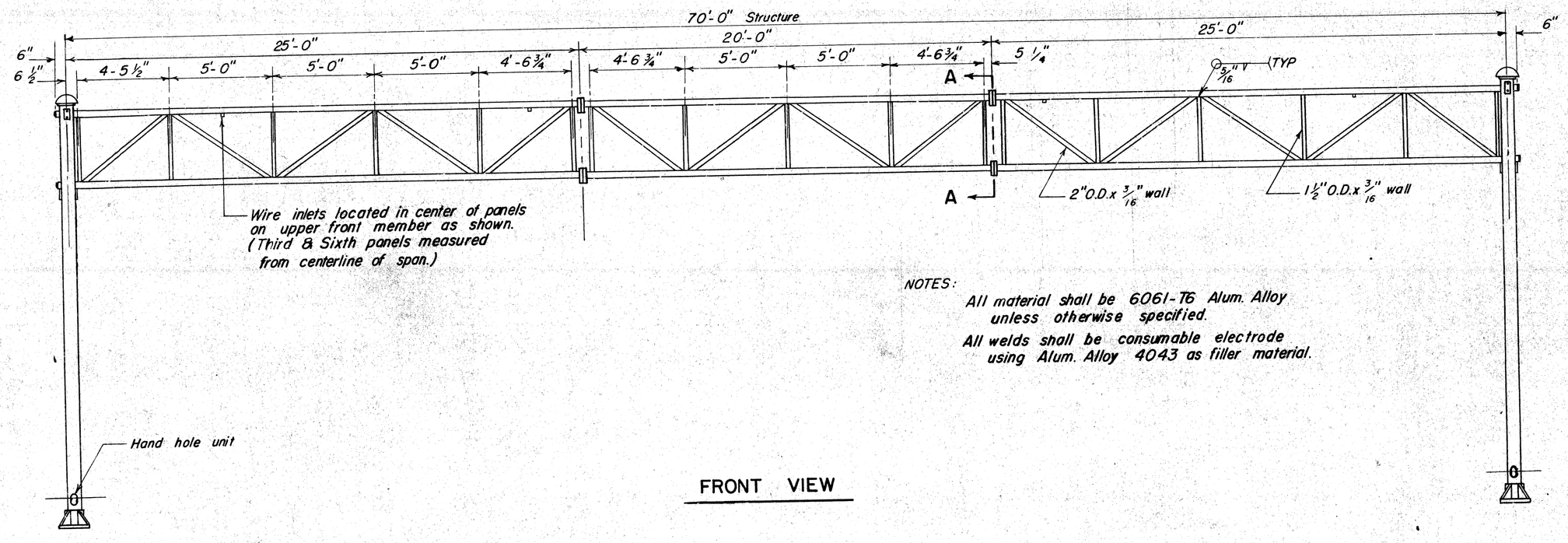

FRONT VIEW

NOTES:

All material shall be 6061-T6 Alum. Alloy unless otherwise specified.

All welds shall be consumable electrode using Alum. Alloy 4043 as filler material.

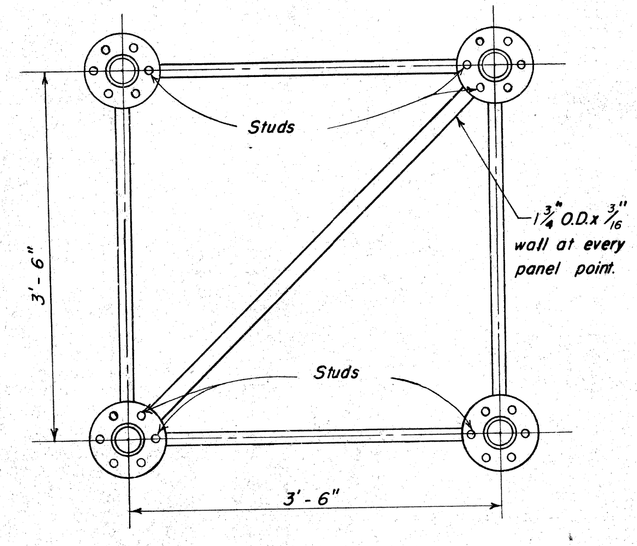

SECTION A-A

5/16"-NC-10x6½" Studs threaded 1¾" from each end placed as indicated. 6 req'd. per casting panel. (2024-T4 Alum. Alloy)

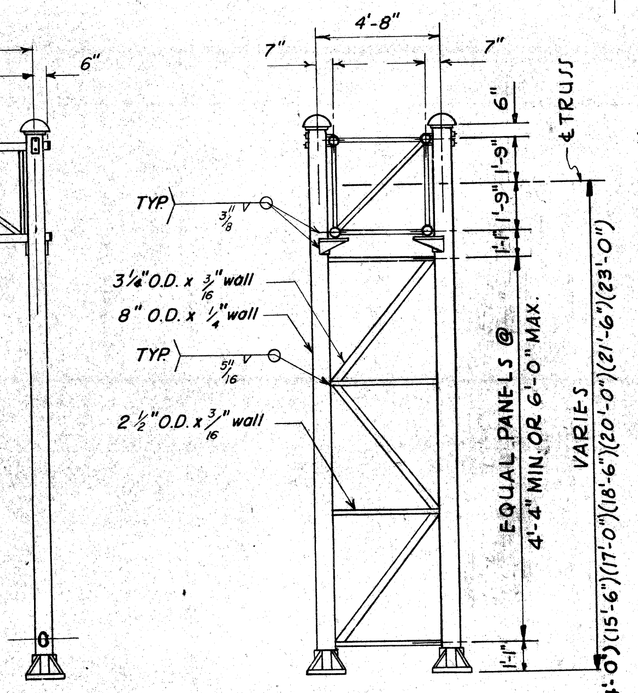

END VIEW

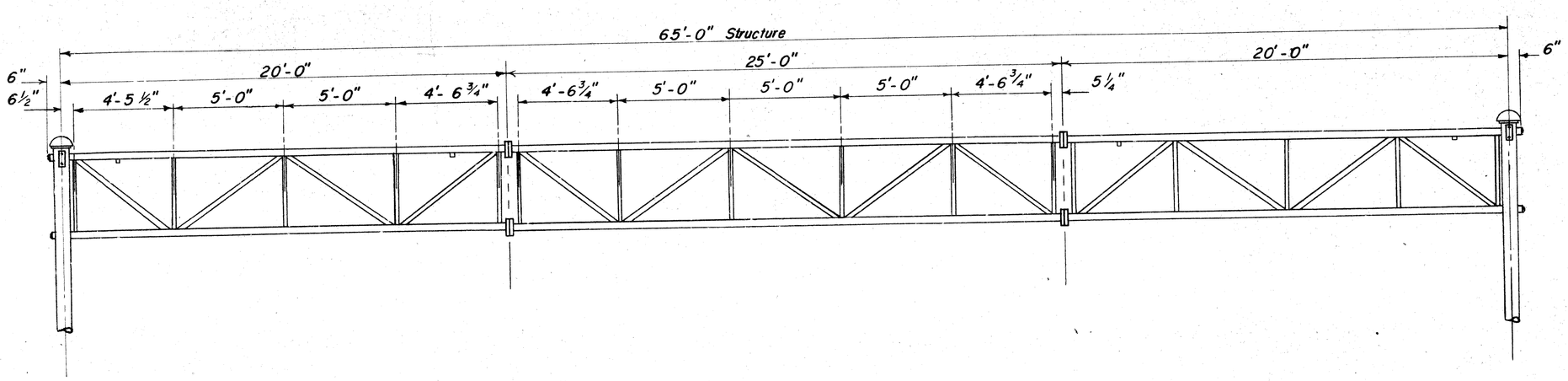

65'-70' ALUMINUM OVERHEAD SIGN SUPPORT STRUCTURE TYPE B	
AUTH. NO.	DRAWN BY F.H.S., Jr.
REVISIONS SEPT. 1960 NOV. 1960	DATE 10-1-58
	SCALE NONE
SHEET NO. 1 OF 3	FILE NO. SF-33

MICHIGAN STATE HIGHWAY DEPARTMENT

STANDARD PLANS FOR

HIGHWAY SIGNS AND SUPPORTS

DESIGN AND TRAFFIC DIVISIONS

CHECKED

RECOMMENDED FOR APPROVAL — ENGINEER OF TRAFFIC OPERATIONS — DATE

RECOMMENDED FOR APPROVAL — ENGINEER OF BRIDGE AND ROAD DESIGN — DATE

RECOMMENDED FOR APPROVAL — DIRECTOR OF TRAFFIC DIVISION — DATE

OFFICES OF ENGINEERING, CONSTRUCTION, MAINTENANCE

APPROVED — CONSTRUCTION ENGINEER — DATE

APPROVED — MAINTENANCE ENGINEER — DATE

APPROVED — CHIEF OF DESIGN — DATE

STATE HIGHWAY DEPARTMENT APPROVAL

APPROVED BY JOHN C. MACKIE, STATE HIGHWAY COMMISSIONER — DATE

BY — DIRECTOR OF ENGINEERING & CHIEF ENGINEER — DATE

APPROVED BY BUREAU OF PUBLIC ROADS — DATE

SS-59

FILE NO. USE NO. 350 STENCIL	STATE PROJECT	FEDERAL PROJECT	SHEET NO.
82251 F C16	82251	I-75-1(183)133	421

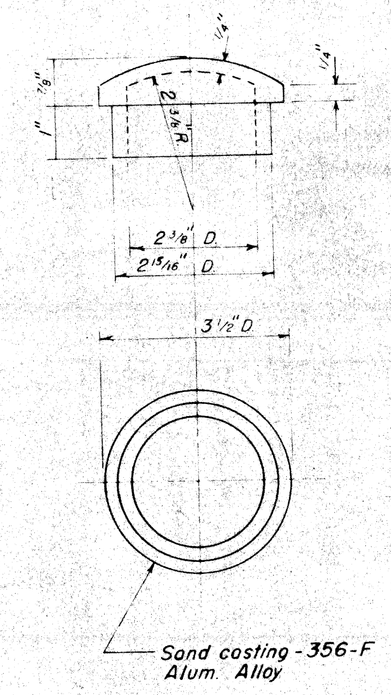

DETAIL OF END CAP

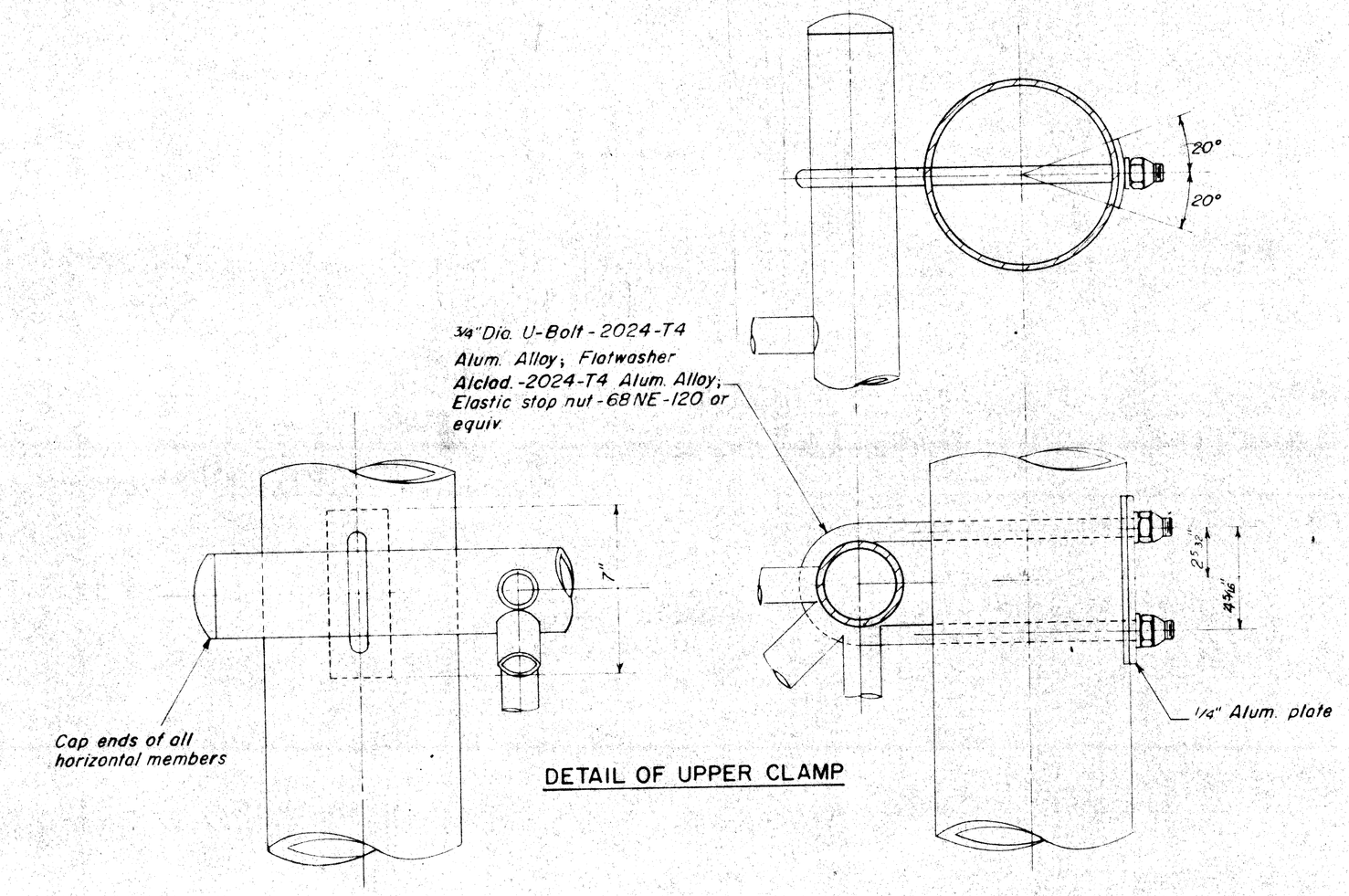

DETAIL OF UPPER CLAMP

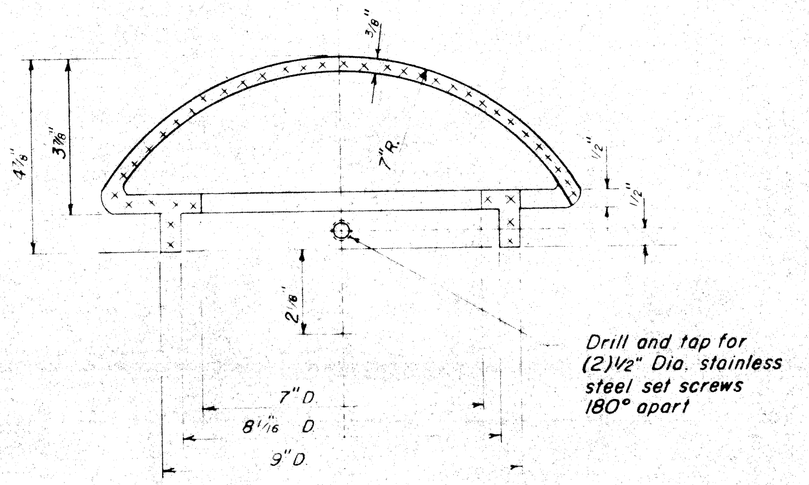

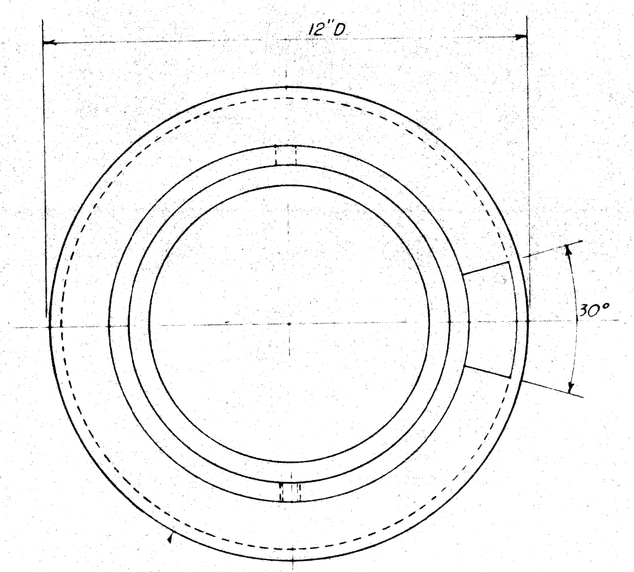

DETAIL OF POLE TOP

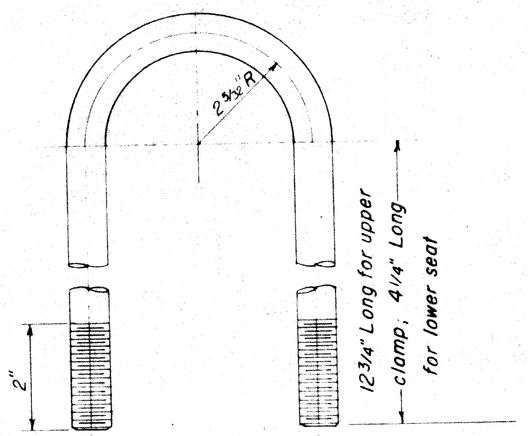

DETAIL OF U-BOLT

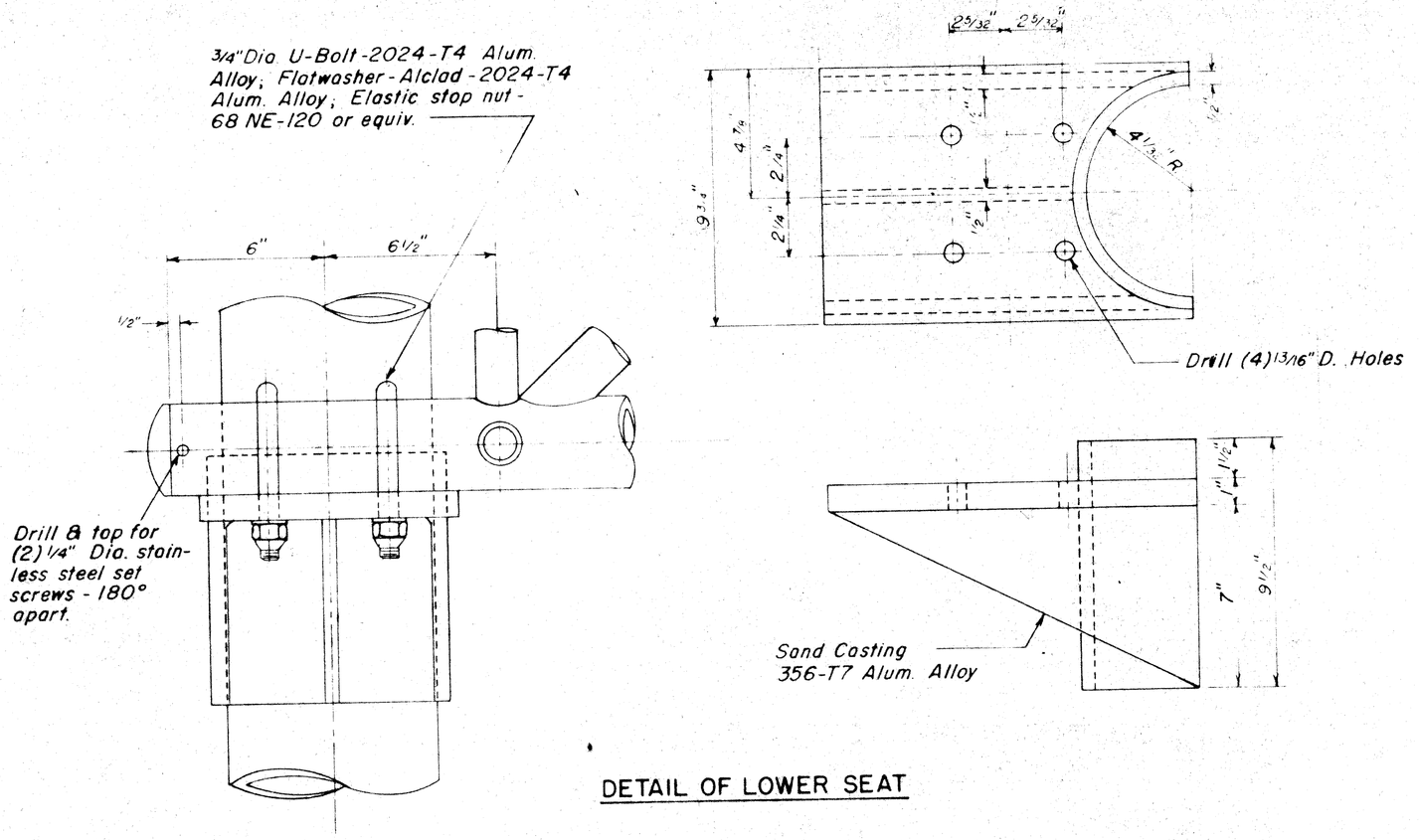

DETAIL OF LOWER SEAT

OFFICES OF ENGINEERING, CONSTRUCTION, MAINTENANCE

APPROVED _____ CONSTRUCTION ENGINEER — DATE 7-28-59

APPROVED _____ MAINTENANCE ENGINEER — DATE 8-31-59

APPROVED _____ CHIEF ENGINEER — DATE 10-1-59

STATE HIGHWAY DEPARTMENT APPROVAL

APPROVED JOHN C. MACKIE, STATE HIGHWAY COMMISSIONER — DATE 10-1-59

BY _____ DIRECTOR OF ENGINEERING

APPROVED BY BUREAU OF PUBLIC ROADS — DATE _____

MICHIGAN STATE HIGHWAY DEPARTMENT

STANDARD PLANS FOR

HIGHWAY SIGNS AND SUPPORTS

DESIGN AND TRAFFIC DIVISIONS

CHECKED _____ ENGINEER OF TRAFFIC OPERATIONS — DATE 7-28-59

RECOMMENDED FOR APPROVAL _____ ENGINEER OF BRIDGE AND ROAD DESIGN — DATE 7-24-59

RECOMMENDED FOR APPROVAL _____ DIRECTOR OF TRAFFIC DIVISION — DATE 7-30-59

65'-70' ALUMINUM OVERHEAD SIGN SUPPORT STRUCTURE

TYPE B

AUTH. NO.	DRAWN BY
REVISIONS	DATE
	SCALE
SHEET NO. 2 OF 3	FILE NO. SF-33

SS-60 | FILE NO. OF STANDARD SHEETS | 82251 F C16 | STATE PROJECT 82251 | FEDERAL PROJECT (75)(183)153 | SHEET NO. 422

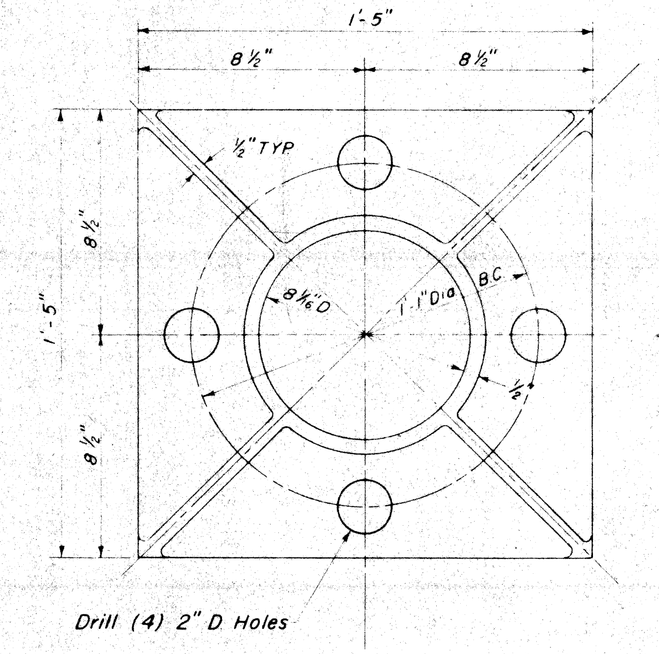

DETAIL OF BASE AND HAND HOLE UNIT

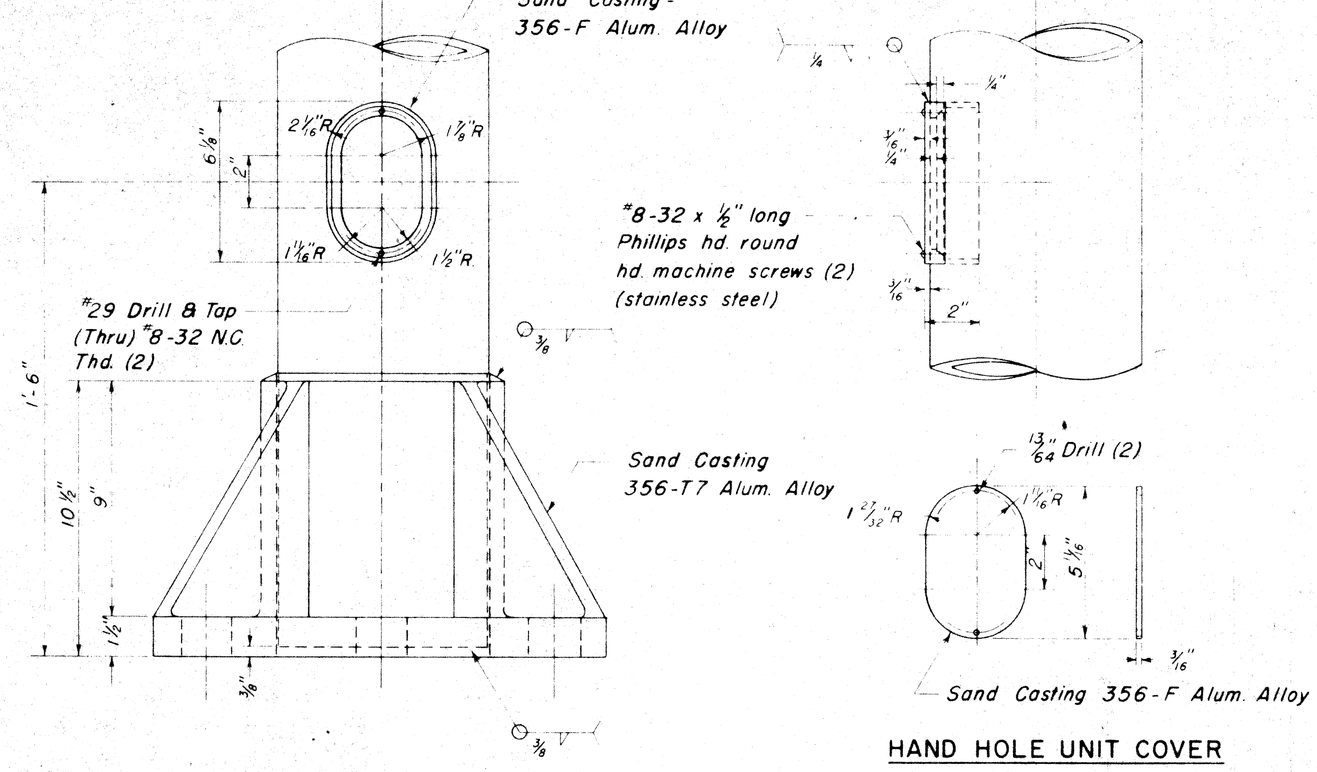

HAND HOLE UNIT COVER

¾"x 5" Hex. hd. bolts - 2024-T4 Alum. Alloy 18 req'd per casting panel; flatwashers alclad 2024-T4 Alum. Alloy - 48 req'd. per casting panel; ¾" elastic stop nut 68 NE-120 or equiv. - 30 req'd per casting panel.

Drill (6) 13/16" Dia. holes - each flange

NOTE
Fabricator shall tighten a minimum of (6) ¾" bolts to the breaking point under the same conditions of lubrication that will be encountered during erection, and specify 80% of the lowest torque obtained for tightening nuts. Lubricant shall meet the requirements of military specifications Jan A-669 or equiv.

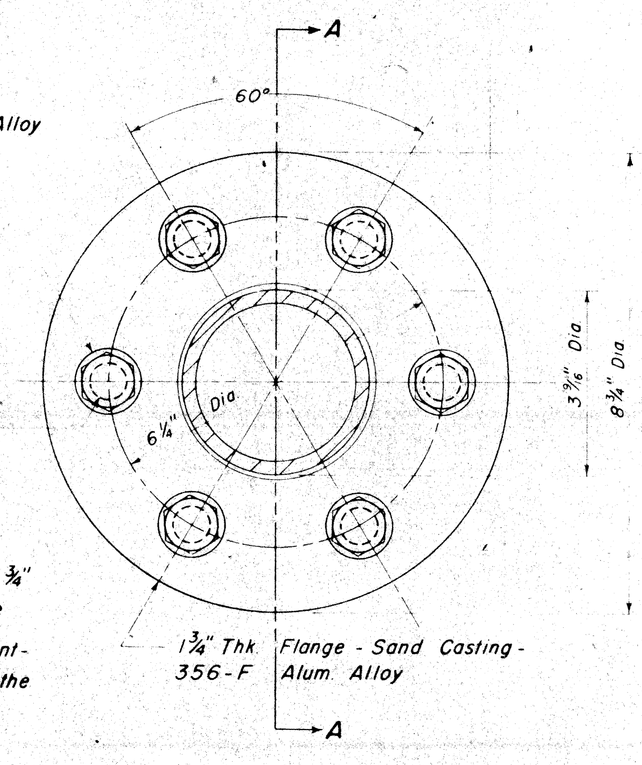

DETAIL OF FLANGE

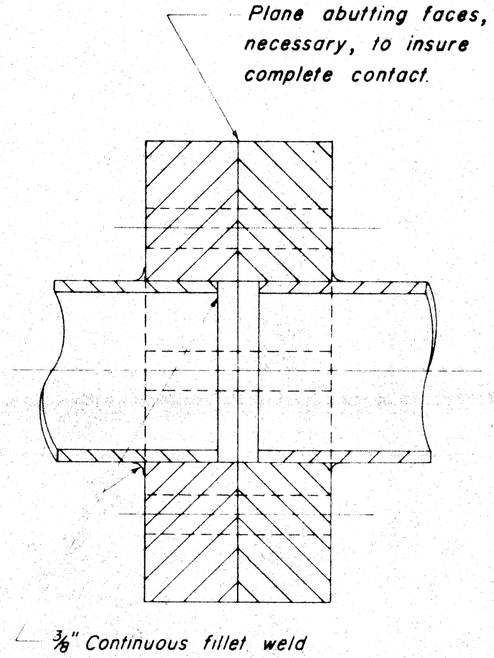

SECTION A-A

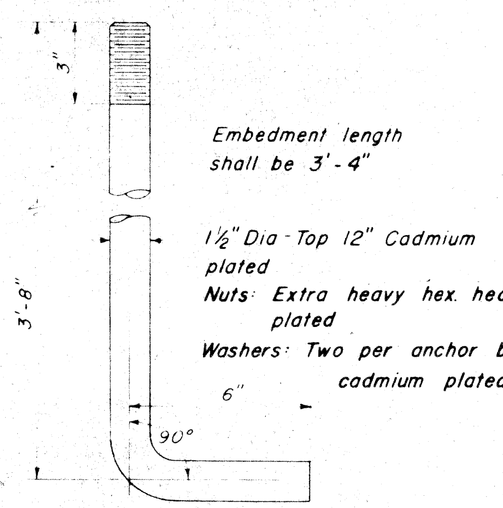

DETAIL OF ANCHOR BOLT

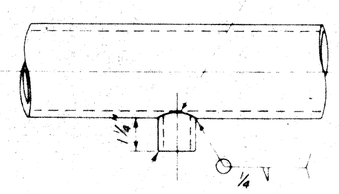

DETAIL OF ELECTRICAL OUTLET

OFFICES OF ENGINEERING, CONSTRUCTION, MAINTENANCE
APPROVED [signature] CONSTRUCTION ENGINEER — DATE 2-20-59
APPROVED [signature] MAINTENANCE ENGINEER — DATE 8-31-59
APPROVED [signature] CHIEF ENGINEER — DATE 10-1-59

STATE HIGHWAY DEPARTMENT APPROVAL
APPROVED JOHN C. MACKIE, STATE HIGHWAY COMMISSIONER
BY [signature] DIRECTOR OF ENGINEERING — DATE 10-1-59
APPROVED BY BUREAU OF PUBLIC ROADS — DATE

MICHIGAN STATE HIGHWAY DEPARTMENT
STANDARD PLANS FOR
HIGHWAY SIGNS AND SUPPORTS

DESIGN AND TRAFFIC DIVISIONS
[signature] ENGINEER OF TRAFFIC OPERATIONS — DATE 7-8-57
[signature] ENGINEER OF BRIDGE AND ROAD DESIGN — DATE
[signature] DIRECTOR OF TRAFFIC DIVISION — DATE

CHECKED
RECOMMENDED FOR APPROVAL
RECOMMENDED FOR APPROVAL

65'-70' ALUMINUM OVERHEAD SIGN SUPPORT STRUCTURE
TYPE B

AUTH. NO.	DRAWN BY
REVISIONS	DATE
	SCALE
SHEET NO. 3 OF 3	FILE NO. SF-33

SS-61 | FILE NO. USE NO. 2000 SYMBOL | 82251 F C16 | STATE PROJECT 82251 | FEDERAL PROJECT I-94-4(83) | SHEET NO. 423

FOOTING FOR ILLUMINATED OVERHEAD - 6' HEIGHT

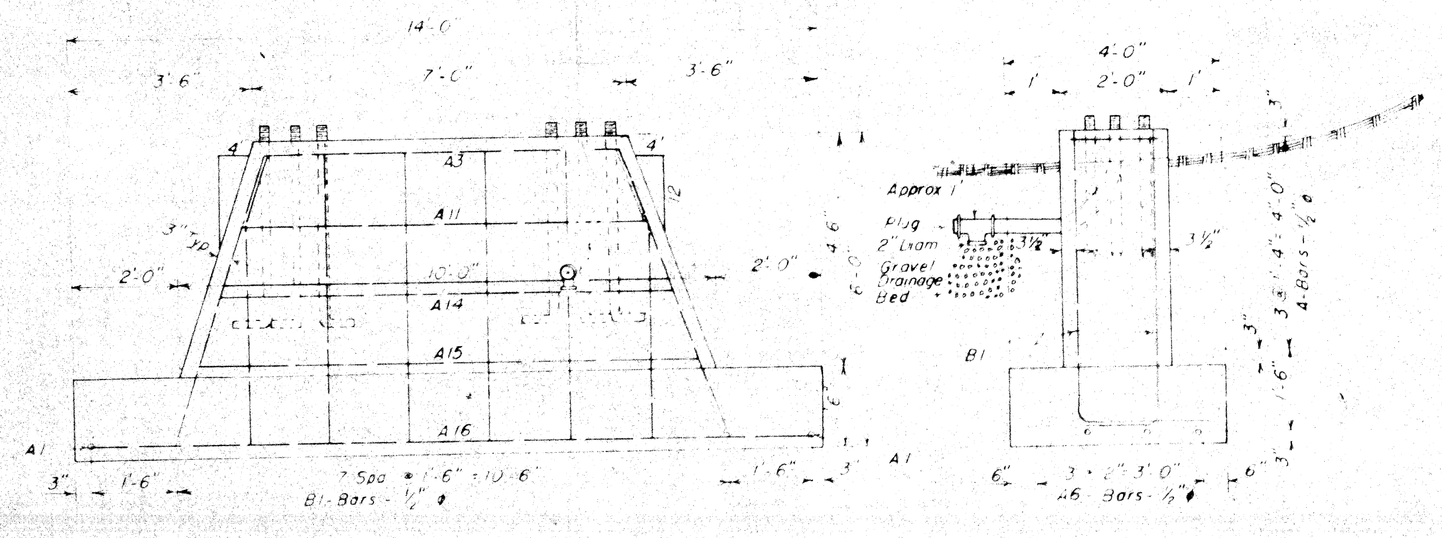

Steel Reinforcement Details

Bar	Size	Dimensions	No of Bars	Weight
B1	½"ø	5'-6"	16	86
A1	½"ø	3'-6"	2	5
A3	"	6'-8"	2	9
A11	"	7'-8"	2	10
A14	"	8'-6"	2	11
A15	"	9'-4"	2	13
A16	"	13'-6"	4	36

Total Weight = 170#
Anchor Bolts not included
Total Concrete = 6.0 cu yds

NOTE:
Long sweep bend 2" rigid galv conduit, 12" radius, 5'-6" long for wire entrance to front support. Cut conduit flush with top of base after concrete has hardened. Begin bend 1'-1" from threaded end.

FOOTING FOR ILLUMINATED OVERHEAD - 7' HEIGHT

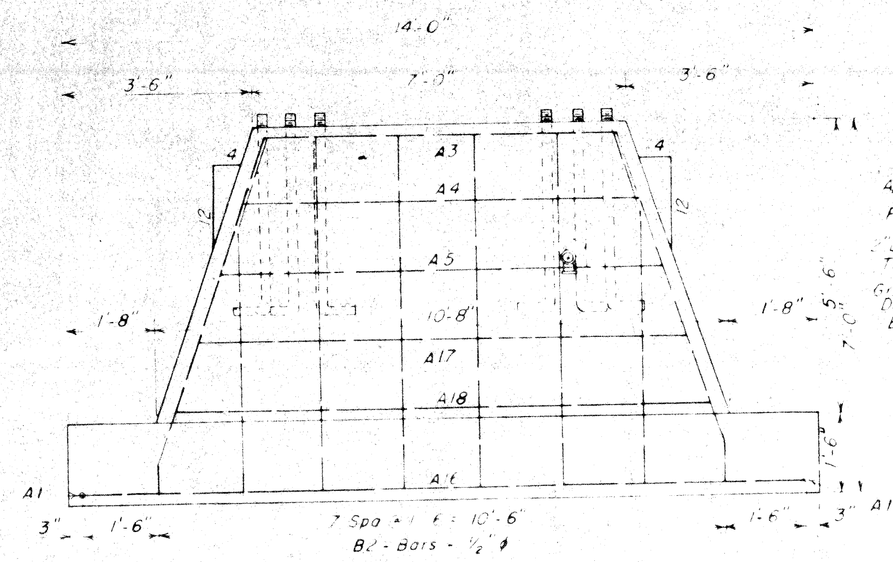

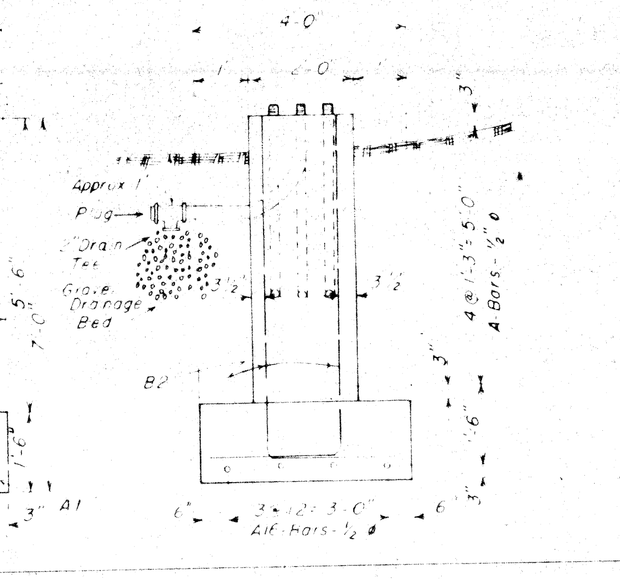

Steel Reinforcement Details

Bar	Size	Dimensions	No of Bars	Weight
B2	½"ø	6'-6"	16	96
A1	½"ø	3'-6"	2	5
A3	"	6'-8"	2	9
A4	"	7'-6"	2	10
A5	"	8'-4"	2	11
A17	"	9'-2"	2	12
A18	"	10'-0"	2	13
A16	"	13'-6"	4	36

Total Weight = 192#
Anchor Bolts not included
Total Concrete = 6.7 cu yds

NOTE:
Long sweep bend 2" rigid galv conduit, 12" radius, 5'-6" long for wire entrance to front support. Cut conduit flush with top of base after concrete has hardened. Begin bend 1'-1" from threaded end.

FOOTING FOR ILLUMINATED OVERHEAD - 8' HEIGHT

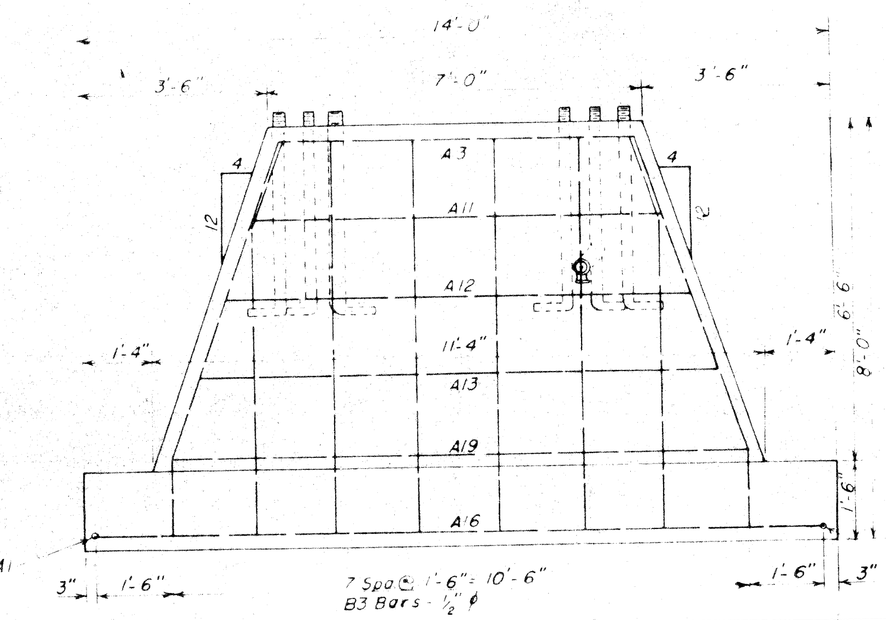

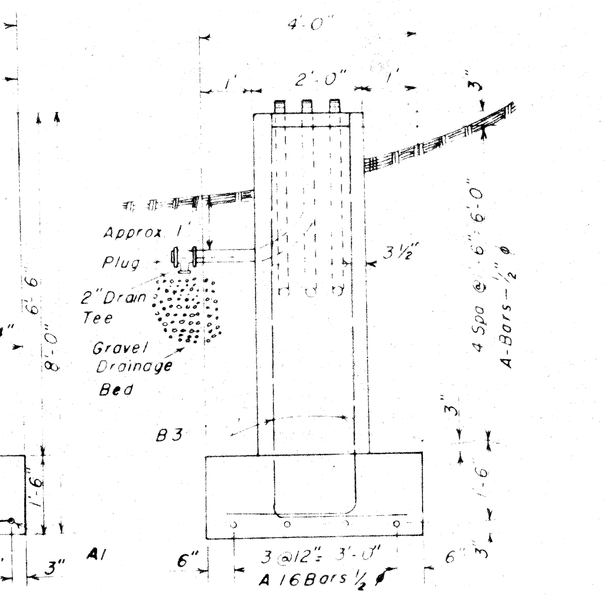

Steel Reinforcement Details

Bar	Size	Dimensions	No of Bars	Weight
B3	½"ø	7'6"	16	107
A1	½"ø	3'-6"	2	5
A3	"	6'-8"	2	9
A11	"	7'-8"	2	11
A12	"	8'-8"	2	12
A13	"	9'-8"	2	13
A19	"	10'-8"	2	14
A16	"	13'-6"	4	36

Total Weight = 206#
Anchor Bolts not included
Total Concrete = 7.5 cu yds

NOTE:
Long sweep bend 2" rigid galv conduit, 12" radius, 5'-6" long for wire entrance to front support. Cut conduit flush with top of base after concrete has hardened. Begin bend 1'-1" from threaded end.

TOP OF BASE FOR 75'-100' ILLUMINATED SPAN

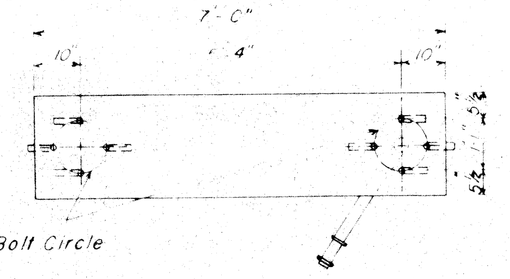

TOP OF BASE FOR 65'-70' ILLUMINATED SPAN

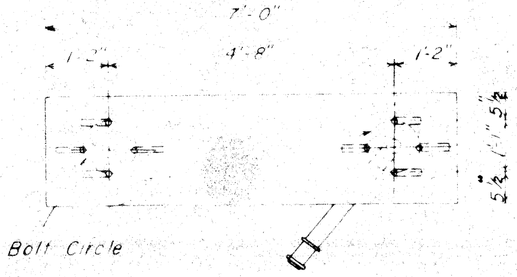

TOP OF BASE FOR 50'-60' ILLUMINATED SPAN

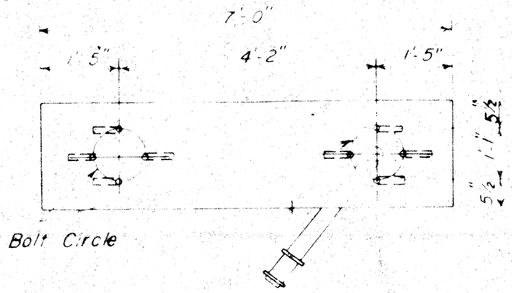

Work Order	Item No	Foundation		Bolt	Disti-Bet.
		Left	Right	Circle	Poles

CONCRETE BASE DETAIL
FOR ALUMINUM OVERHEAD
STRUCTURE—TYPE B

AUTH NO Rev 4-17-58	DRAWN BY F H S Jr
REVISIONS	DATE 10-21-58
	SCALE NONE
SHEET NO 1 OF 1	FILE NO S F - 25

OFFICES OF ENGINEERING, CONSTRUCTION, MAINTENANCE

APPROVED _____ DATE 8-31-59
CONSTRUCTION ENGINEER

APPROVED _____ DATE 10-1-59
MAINTENANCE ENGINEER

APPROVED _____ DATE 10-1-59
CHIEF ENGINEER

STATE HIGHWAY DEPARTMENT APPROVAL

APPROVED _____ DATE 10-1-59
BY JOHN C. MACKIE, STATE HIGHWAY COMMISSIONER
DIRECTOR OF ENGINEERING

APPROVED BY BUREAU OF PUBLIC ROADS _____ DATE _____

MICHIGAN STATE HIGHWAY DEPARTMENT

STANDARD PLANS FOR

HIGHWAY SIGNS AND SUPPORTS

DESIGN AND TRAFFIC DIVISIONS

CHECKED _____ DATE 7-25-58
ENGINEER OF TRAFFIC OPERATIONS

RECOMMENDED FOR APPROVAL _____ DATE 7-25-58
ENGINEER OF BRIDGE AND ROAD DESIGN

RECOMMENDED FOR APPROVAL _____ DATE _____
DIRECTOR OF TRAFFIC DIVISION

SS-66 | FILE NO. DESIGNED BY STENCIL | 82251 F C16 | STATE PROJECT 82251 | FEDERAL PROJECT (STM)0003 | SHEET NO. 424

DESIGN AND TRAFFIC DIVISIONS

CHECKED

ENGINEER OF TRAFFIC OPERATIONS — DATE

RECOMMENDED FOR APPROVAL

ENGINEER OF BRIDGE AND ROAD DESIGN — DATE

RECOMMENDED FOR APPROVAL

DIRECTOR OF TRAFFIC DIVISION — DATE

STATE PROJECT 82251 | FEDERAL PROJECT I-75-4(163)3 | SHEET NO. 425

MICHIGAN STATE HIGHWAY DEPARTMENT

STANDARD PLANS FOR

HIGHWAY SIGNS AND SUPPORTS

FILE NO. USE SBO STENCIL 82251 F C16

SS-66 A

Rev. 7/10/61
Rev. 3/2/61

50'& 60' Aluminum Overhead Sign Support Structure, "Type C"	AUTH. NO.	DRAWN Given	
	CONT. SEC.	DATE 1-30-60	
	REF.	SCALE	
	SHEET 1 OF 3	PLAN SF-65	

OFFICES OF ENGINEERING, CONSTRUCTION, MAINTENANCE

APPROVED CONSTRUCTION ENGINEER — DATE

APPROVED MAINTENANCE ENGINEER — DATE

APPROVED CHIEF OF DESIGN — DATE

STATE HIGHWAY DEPARTMENT APPROVAL

APPROVED JOHN C. MACKIE, STATE HIGHWAY COMMISSIONER

BY

DIRECTOR OF ENGINEERING & CHIEF ENGINEER — DATE

APPROVED BY BUREAU OF PUBLIC ROADS — DATE

NOTES:

Material: Alum Alloy, 6061-T6 Except where noted.
Specifications: Specifications for Structures of Alum
Alloy 6061-T6.

Weight of Box Truss = 40#Per Lin. Ft.

Sign Area = 480 Sq. Ft. Max.

All welds shall be Consumable Electrode Type using Alum.
Alloy 4043 as filler material.*

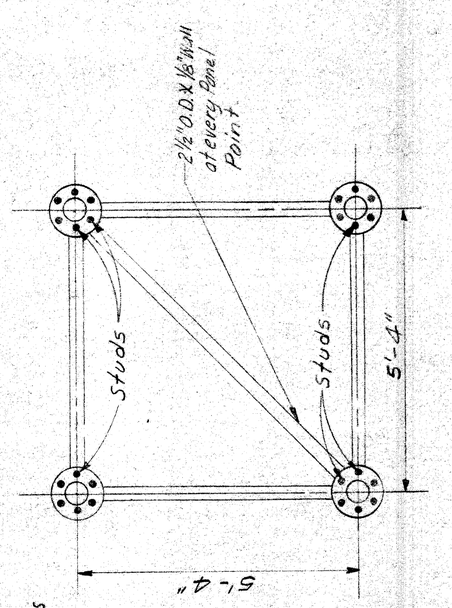

SECTION A-A

3/4"-N.C.-10X6½"Studs threaded 1/3 4" from each end placed as indicted- 6 req'd. per panel. (2024-T4 Alum. Alloy.)

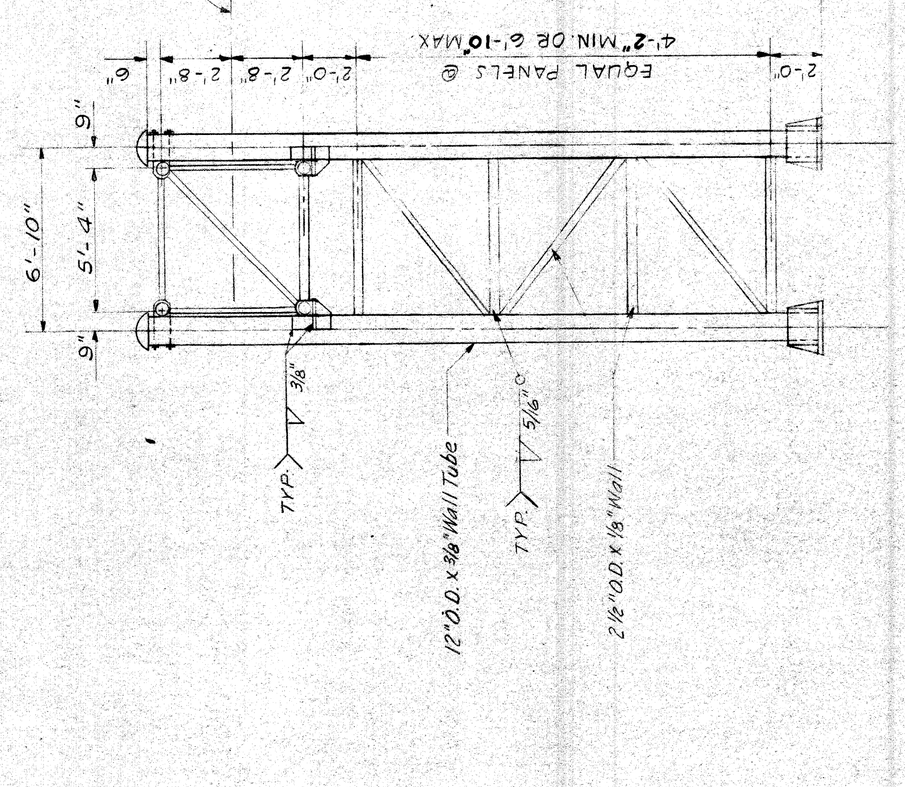

END VIEW

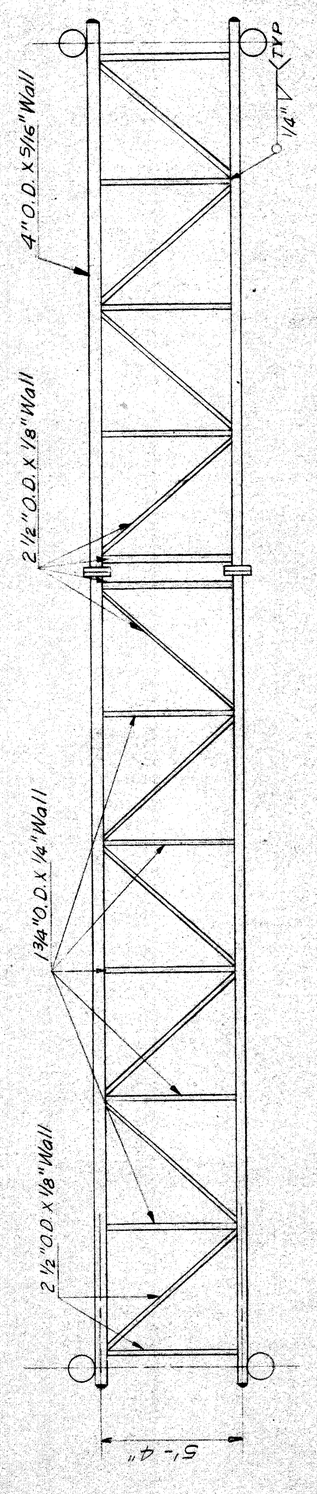

TOP VIEW

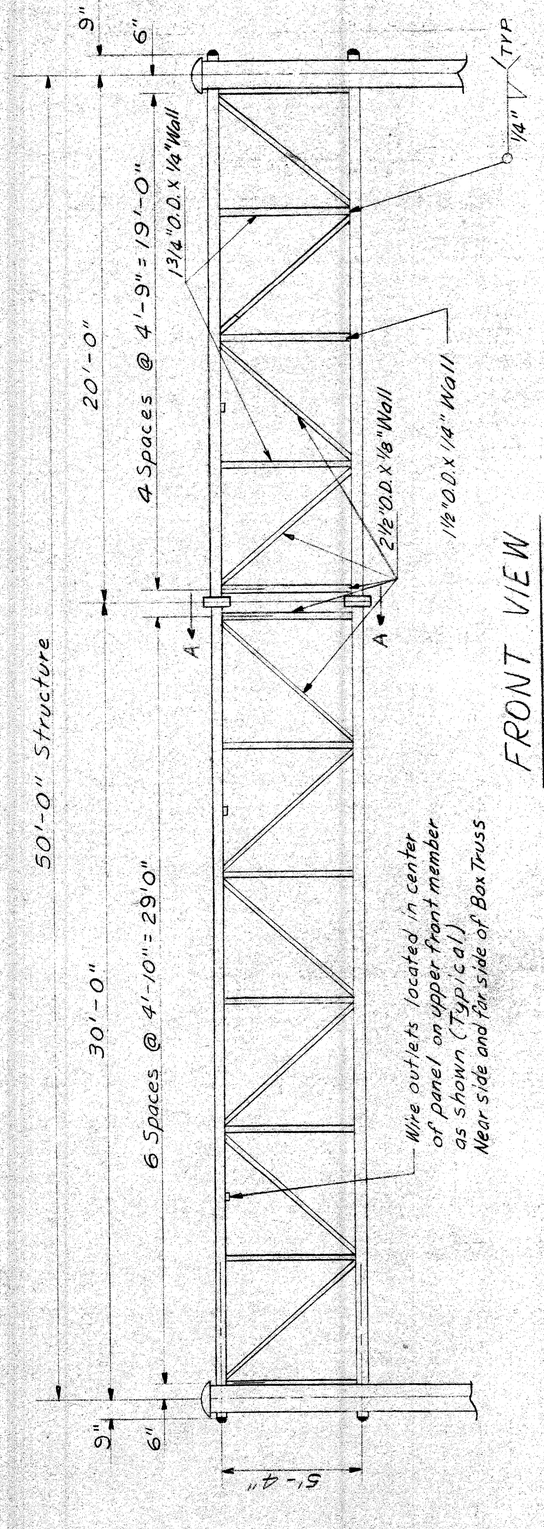

FRONT VIEW

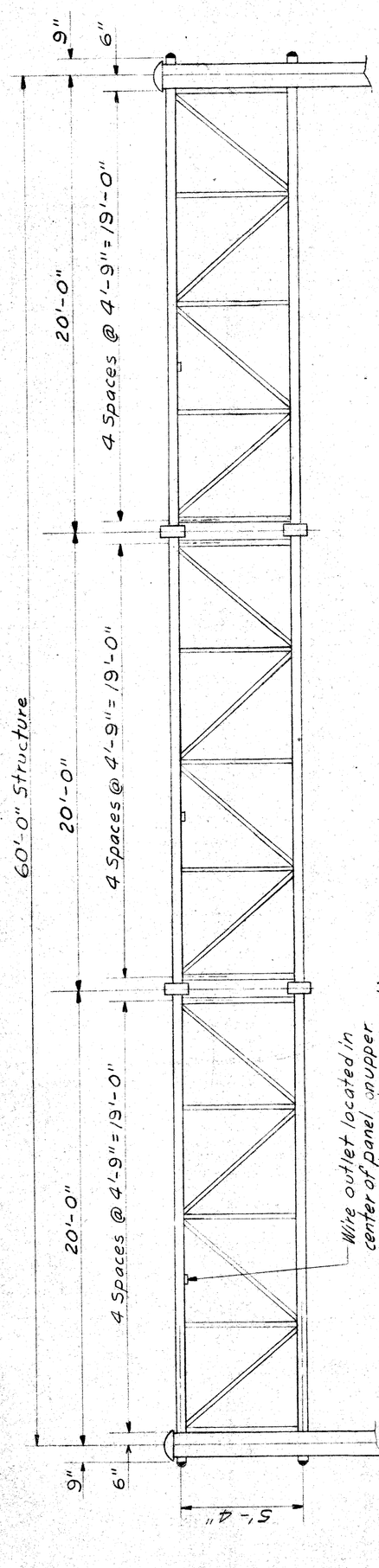

FRONT VIEW

MICHIGAN STATE HIGHWAY DEPARTMENT

STANDARD PLANS FOR

HIGHWAY SIGNS AND SUPPORTS

DESIGN AND TRAFFIC DIVISIONS

CHECKED

RECOMMENDED FOR APPROVAL

ENGINEER OF TRAFFIC OPERATIONS — DATE

ENGINEER OF BRIDGE AND ROAD DESIGN — DATE

DIRECTOR OF TRAFFIC DIVISION — DATE

RECOMMENDED FOR APPROVAL

OFFICES OF ENGINEERING, CONSTRUCTION, MAINTENANCE

APPROVED CHIEF OF DESIGN — DATE

APPROVED MAINTENANCE ENGINEER — DATE

APPROVED CONSTRUCTION ENGINEER — DATE

STATE HIGHWAY DEPARTMENT APPROVAL

APPROVED JOHN C. MACKIE, STATE HIGHWAY COMMISSIONER

BY DIRECTOR OF ENGINEERING & CHIEF ENGINEER — DATE

APPROVED BY BUREAU OF PUBLIC ROADS — DATE

STATE PROJECT 82251 — FEDERAL PROJECT I-75-1(63)58 — SHEET NO. 426

FILE NO. USED NOT USED 82251 F C16

SS-66B

DRAWN Giver — DATE 3-64 — SCALE — PLAN SF-65

AUTH. NO. — CONT. SEC. — REF. — SHEET 2 OF 3

Aluminum Overhead Sign Support Structure "Type C"

50'f 60'

480 Sq. ft.

Max. Sign Area

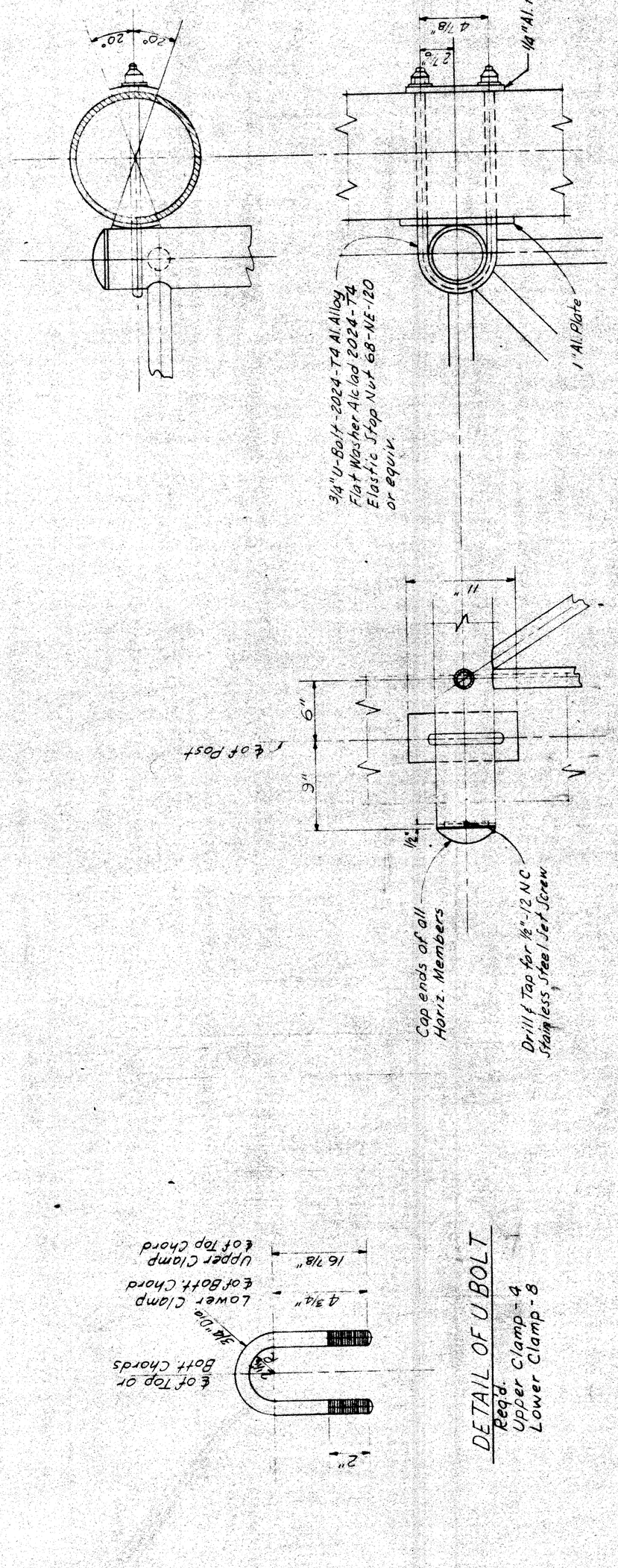

10-14-60

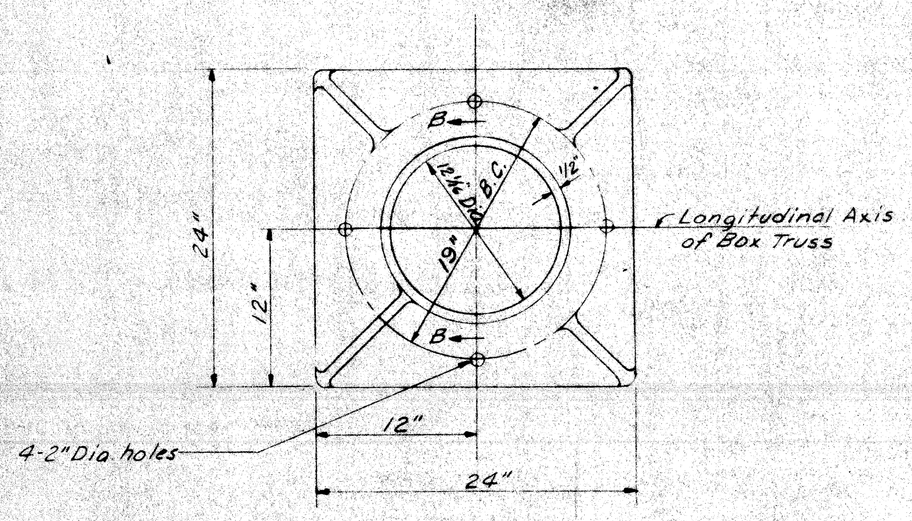

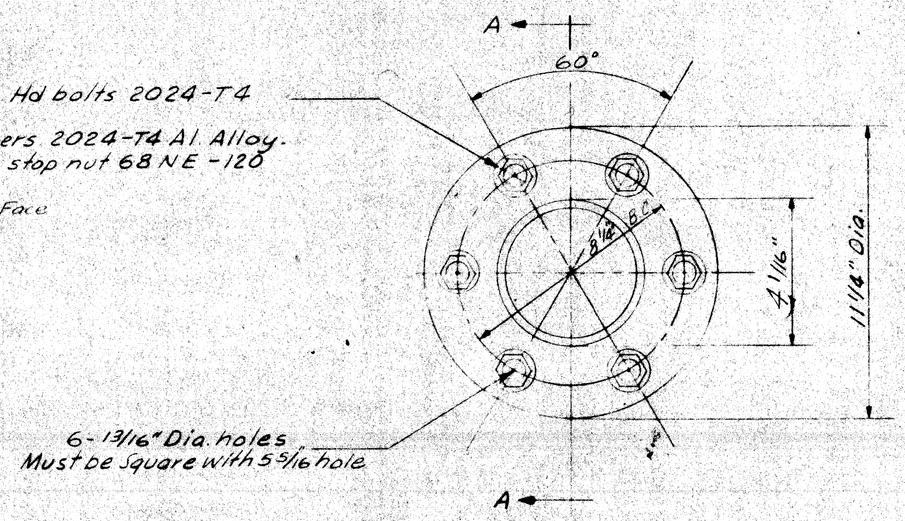

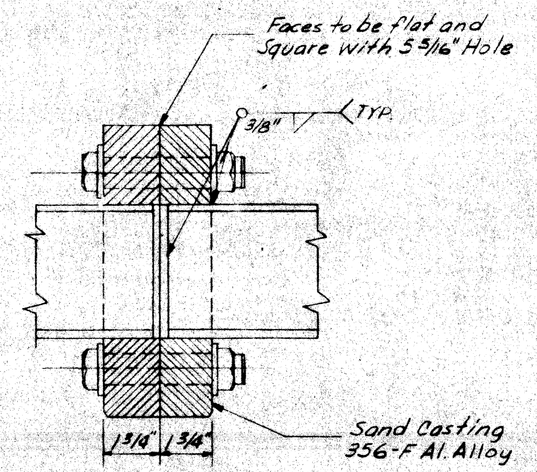

SECTION A-A

DETAIL OF FLANGE

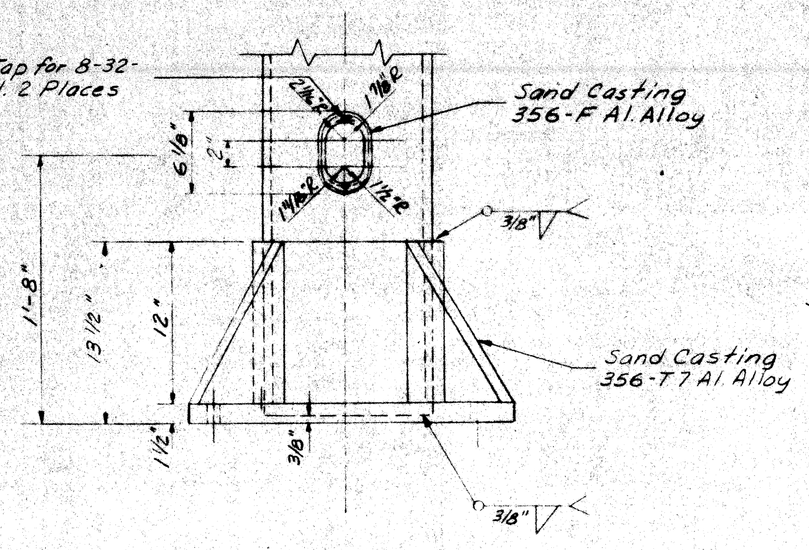

DETAIL OF BASE AND HAND HOLE UNIT

Req'd. 4 Bases
2 Hand Hole Units

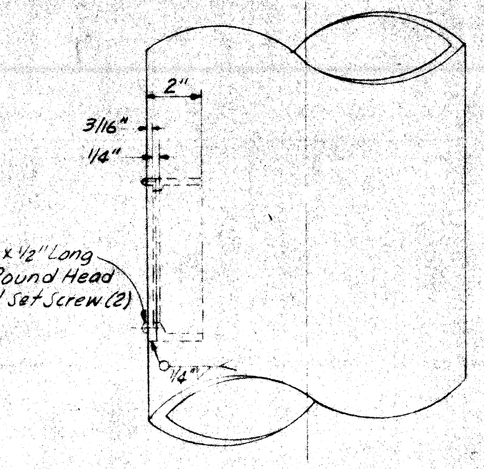

SECTION B-B

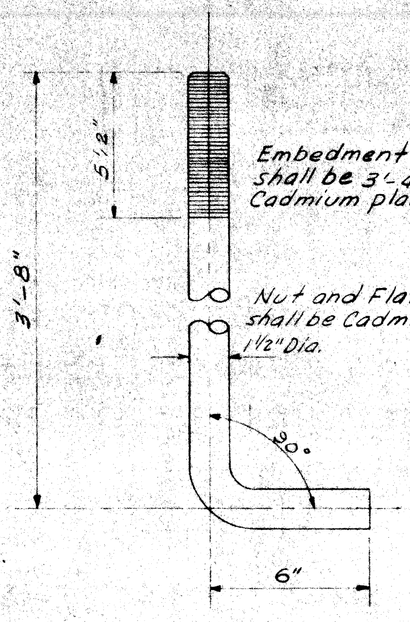

DETAIL OF ANCHOR BOLT

16 - Req'd.

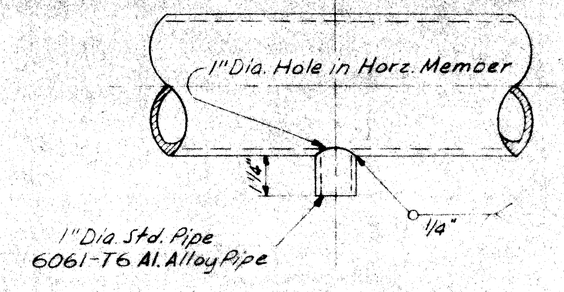

DETAIL OF ELECTRICAL OUTLET

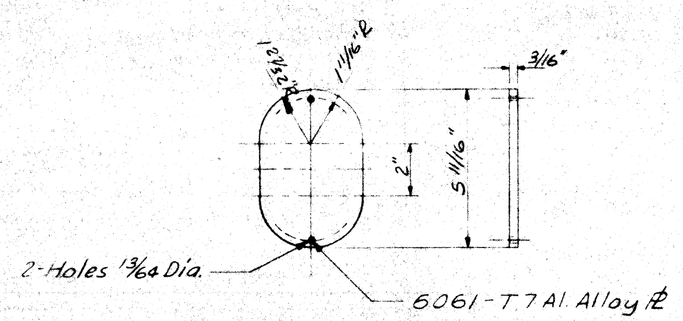

HAND HOLE UNIT COVER

2-Req'd.

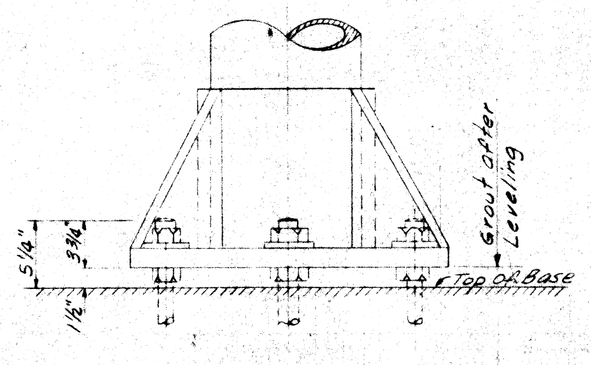

DETAIL OF BASE

32 Nuts Req'd.
16 Washers Req'd.

Max. Sign Area 480 Sq. Ft.
50' & 60' Aluminum Overhead Sign Support Structure "Type C"

	AUTH. NO.	DRAWN Giver
	CONT. SEC.	DATE 9-8-60
	REF.	SCALE
	SHEET 3 OF 3	PLAN SF-65

Rev. 1/26/61

OFFICES OF ENGINEERING, CONSTRUCTION, MAINTENANCE

APPROVED _____ CONSTRUCTION ENGINEER _____ DATE _____

APPROVED _____ MAINTENANCE ENGINEER _____ DATE _____

APPROVED _____ CHIEF OF DESIGN _____ DATE _____

STATE HIGHWAY DEPARTMENT APPROVAL

APPROVED JOHN C. MACKIE, STATE HIGHWAY COMMISSIONER

BY _____ DIRECTOR OF ENGINEERING & CHIEF ENGINEER _____ DATE _____

APPROVED BY BUREAU OF PUBLIC ROADS _____ DATE _____

MICHIGAN STATE HIGHWAY DEPARTMENT

STANDARD PLANS FOR

HIGHWAY SIGNS AND SUPPORTS

DESIGN AND TRAFFIC DIVISIONS

CHECKED _____ ENGINEER OF TRAFFIC OPERATIONS _____ DATE _____

RECOMMENDED FOR APPROVAL _____ ENGINEER OF BRIDGE AND ROAD DESIGN _____ DATE _____

RECOMMENDED FOR APPROVAL _____ DIRECTOR OF TRAFFIC DIVISION _____ DATE _____

SS-66 C

FILE NO. & SHEET NO. OR STENCIL	STATE PROJECT	FEDERAL PROJECT	SHEET NO.
82251 F C16	82251	I-75-1(83)57	427

DESIGN AND TRAFFIC DIVISIONS

CHECKED
RECOMMENDED FOR APPROVAL — ENGINEER OF TRAFFIC OPERATIONS — DATE
RECOMMENDED FOR APPROVAL — ENGINEER OF BRIDGE AND ROAD DESIGN — DATE
RECOMMENDED FOR APPROVAL — DIRECTOR OF TRAFFIC DIVISION — DATE

STATE HIGHWAY DEPARTMENT APPROVAL

APPROVED JOHN C. MACKIE, STATE HIGHWAY COMMISSIONER
BY — DIRECTOR OF ENGINEERING & CHIEF ENGINEER — DATE

APPROVED BY BUREAU OF PUBLIC ROADS — DATE

OFFICES OF ENGINEERING, CONSTRUCTION, MAINTENANCE

APPROVED — CONSTRUCTION ENGINEER — DATE
APPROVED — MAINTENANCE ENGINEER — DATE
APPROVED — CHIEF OF DESIGN — DATE

MICHIGAN STATE HIGHWAY DEPARTMENT

STANDARD PLANS FOR

HIGHWAY SIGNS AND SUPPORTS

FILE NO. USE SHEET NO.	STATE PROJECT	FEDERAL PROJECT	SHEET
82251 F C16	82251	I-75(143)53	428

SS-66 D

AUTH. NO.	DRAWN Giwer
CONT. SEC.	DATE 9-21-66
REF.	SCALE
SHEET 1 OF 3	PLAN J.F. 66

70'ϕ 80' Aluminum Overhead Sign Support Structure Type "D"

Rev. 4/26/61
Rev. 3/7/61
Rev. 1/10/61

Notes:
Material: Alum. Alloy 6061-T6 Except where noted.
Specifications: Specifications for Structures of Alum. Alloy 6061-T6

Weight of Box Truss = 50 # Per Lin. Ft.

Sign Area = 480 Sq. Ft. Max.

All welds shall be Consumable Electrode Type using Alum. Alloy 4043 as filler material.

END VIEW

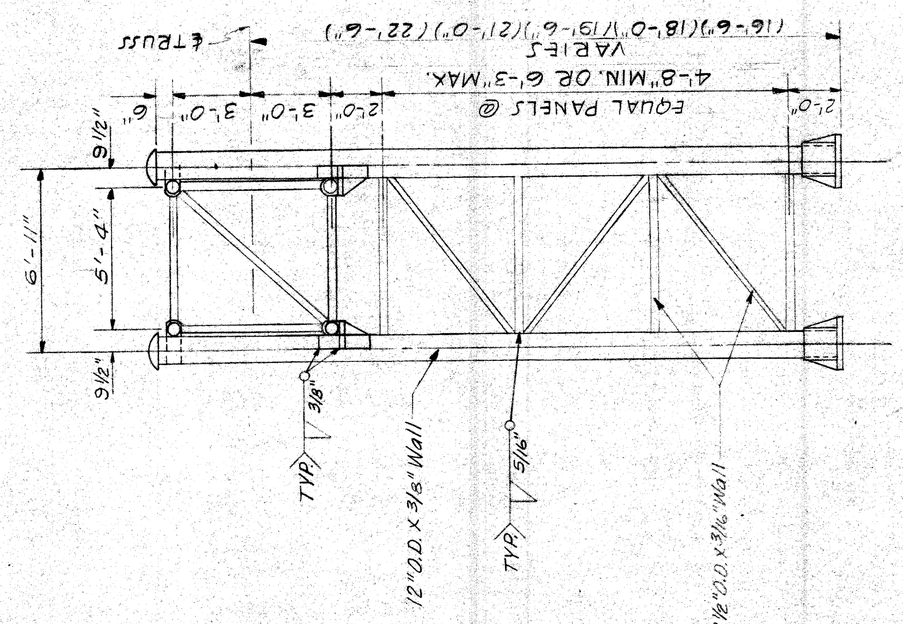

SECTION A-A

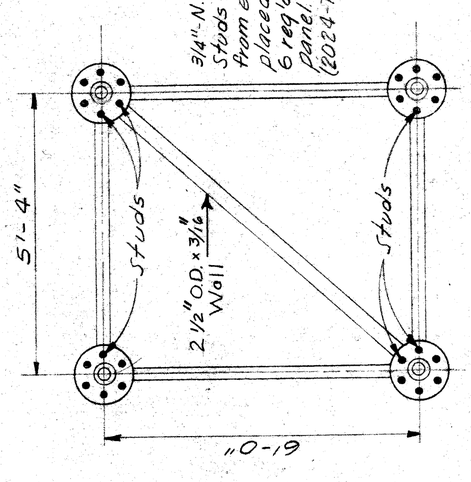

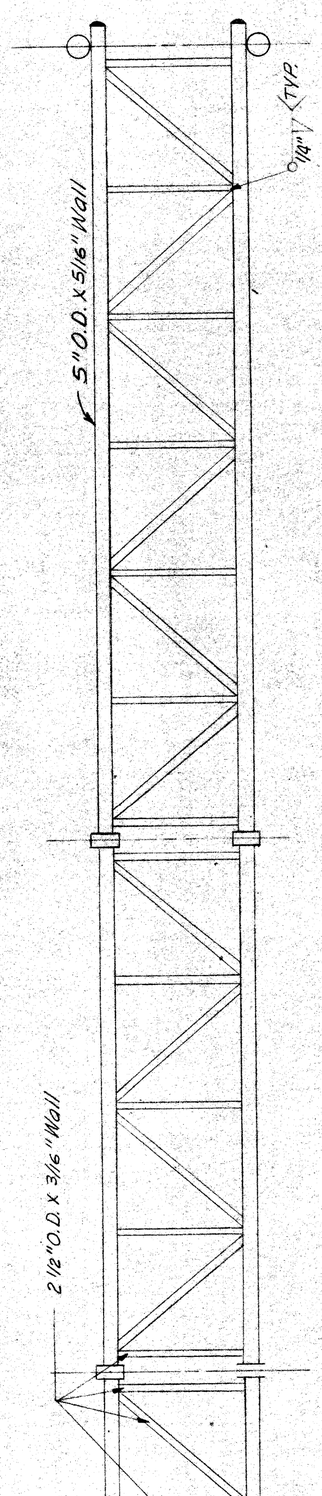

TOP VIEW

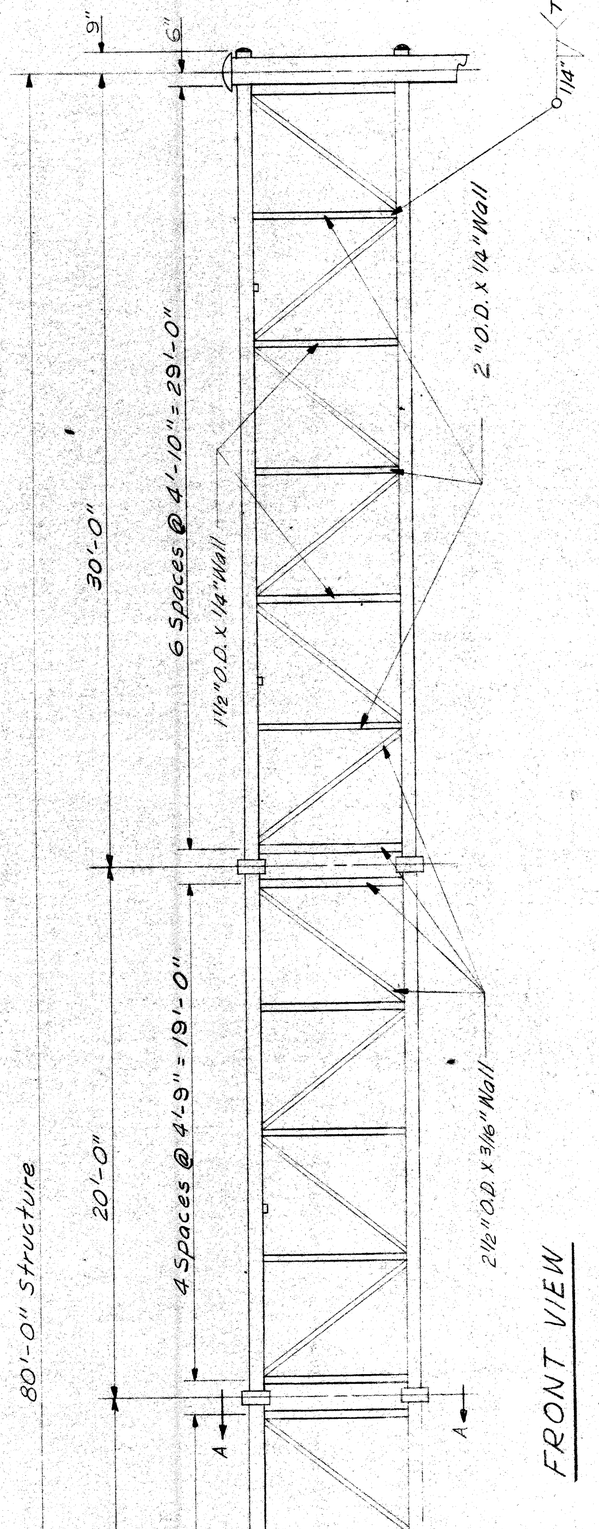

FRONT VIEW

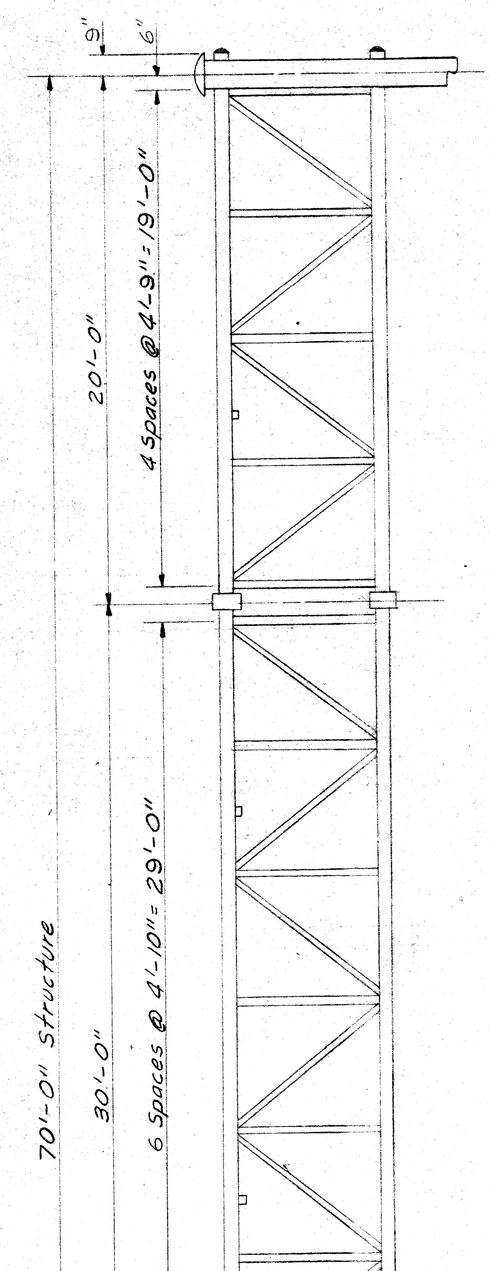

FRONT VIEW

09-21-01

DETAIL OF END CAP
8 - Req'd.

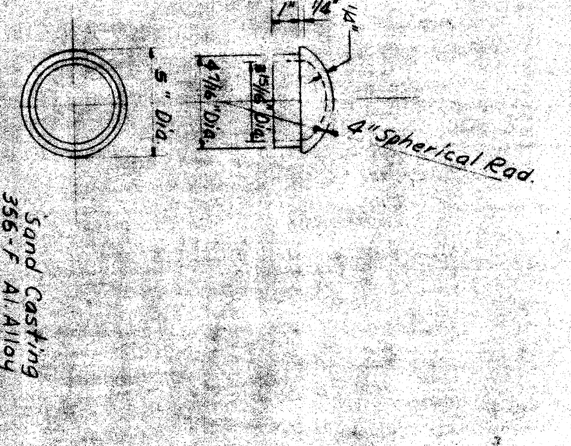

Sand Casting
356-F Al. Alloy

DETAIL OF U BOLT
Req'd.
Upper Clamp - 4
Lower Clamp - 8

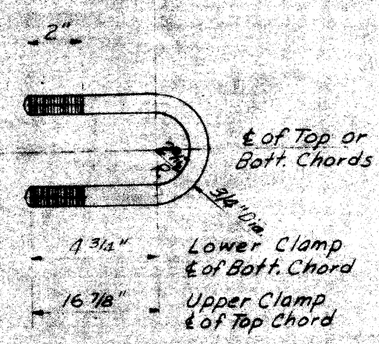

Cap ends of all Horiz. Members

Drill & Tap for ¼"-20 NC Stainless Steel Set Screw

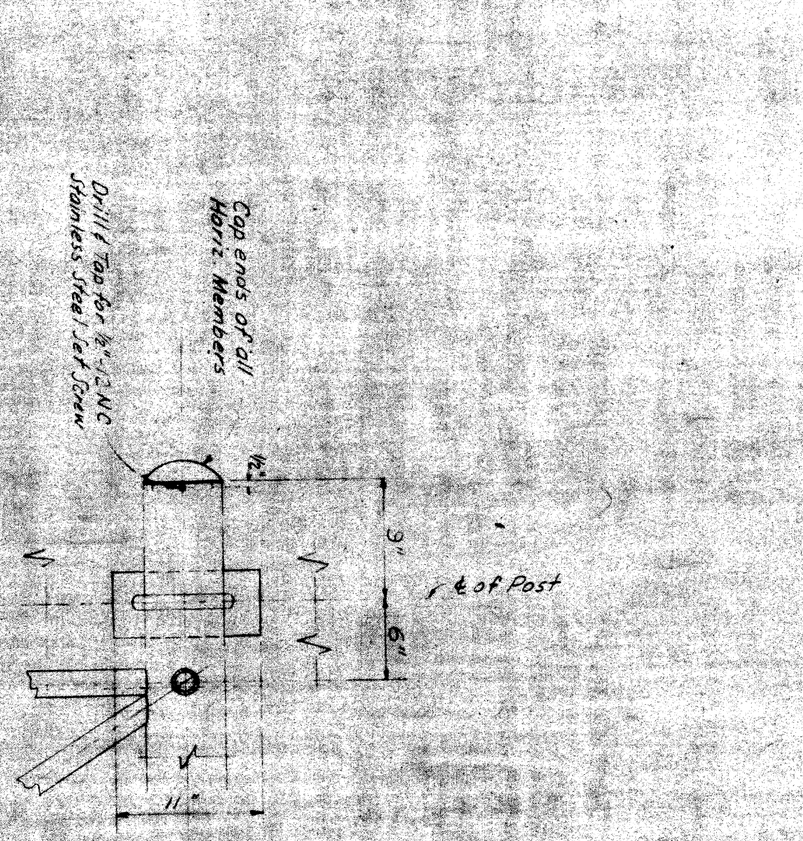

DETAIL OF UPPER CLAMP

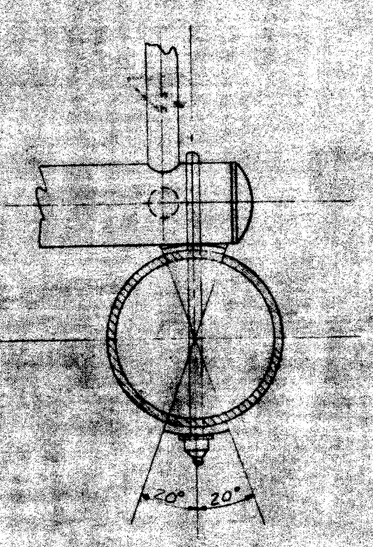

DETAIL OF POLE CAP
4 - Req'd.

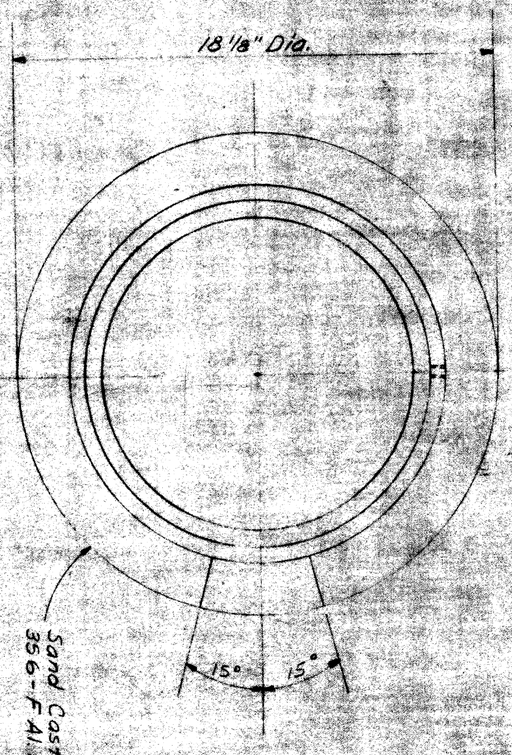

Sand Casting
356-F Al. Alloy

Drill & Tap for ½"-13 N.C. Stainless Steel Set Screw.

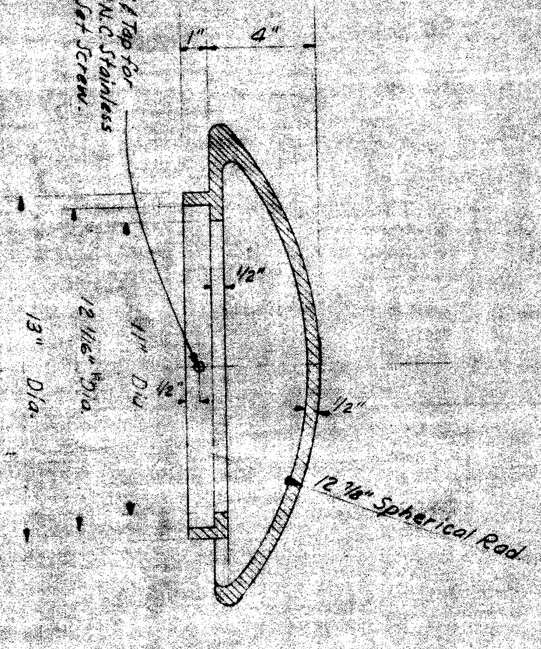

Drill & Tap for ½"-13 N.C Stainless Steel Set Screw

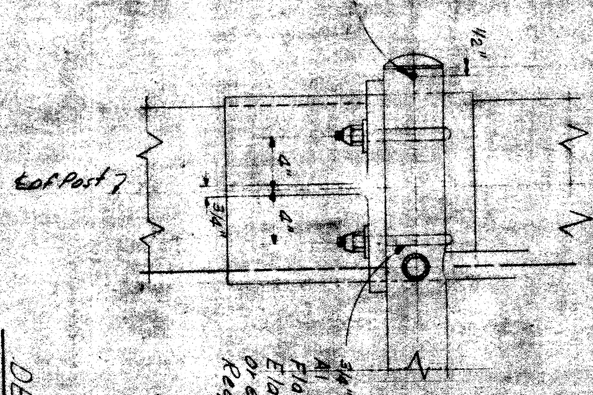

DETAIL OF SEAT
4 - Req'd.

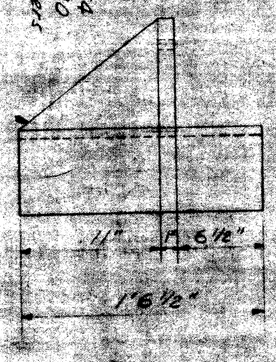

Sand Casting
356-T7 Al. Alloy

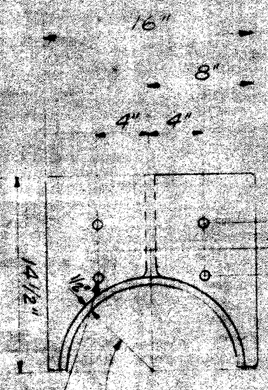

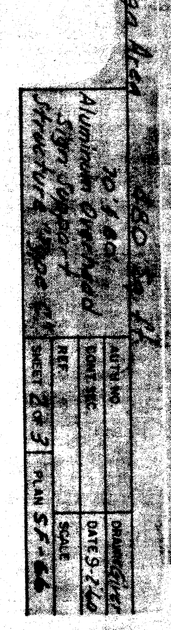

MICHIGAN STATE HIGHWAY DEPARTMENT

STANDARD PLANS FOR

HIGHWAY SIGNS AND SUPPORTS

DESIGN AND TRAFFIC DIVISIONS

CHECKED — ENGINEER OF TRAFFIC OPERATIONS — DATE

RECOMMENDED FOR APPROVAL — ENGINEER OF BRIDGE AND ROAD DESIGN — DATE

RECOMMENDED FOR APPROVAL — DIRECTOR OF TRAFFIC DIVISION — DATE

OFFICES OF ENGINEERING, CONSTRUCTION, MAINTENANCE

APPROVED — CONSTRUCTION ENGINEER — DATE

APPROVED — MAINTENANCE ENGINEER — DATE

APPROVED — CHIEF OF DESIGN — DATE

STATE HIGHWAY DEPARTMENT APPROVAL

APPROVED JOHN C. MACKIE, STATE HIGHWAY COMMISSIONER

BY — DIRECTOR OF ENGINEERING & CHIEF ENGINEER — DATE

APPROVED BY BUREAU OF PUBLIC ROADS — DATE

FILE NO. USBRO STENCIL	8225	F	C16
STATE PROJECT	FEDERAL PROJECT	SHEET NO.	
8225	F 75(16)153	429	

SS-66E

BLUE PRINT CO. 305 E. WILLIAM ST. ANN ARBOR

DESIGN AND TRAFFIC DIVISIONS

CHECKED — ENGINEER OF TRAFFIC OPERATIONS — DATE
RECOMMENDED FOR APPROVAL — ENGINEER OF BRIDGE AND ROAD DESIGN — DATE
RECOMMENDED FOR APPROVAL — DIRECTOR OF TRAFFIC DIVISION — DATE

STATE PROJECT 8225/ | FEDERAL PROJECT F-25(49)253 | SHEET NO. 430

MICHIGAN STATE HIGHWAY DEPARTMENT

STANDARD PLANS FOR

HIGHWAY SIGNS AND SUPPORTS

FILE NO. 390 SYENGIL

8225 F C16

SS-66F

STATE HIGHWAY DEPARTMENT APPROVAL

APPROVED JOHN C. MACKIE, STATE HIGHWAY COMMISSIONER

BY DIRECTOR OF ENGINEERING & CHIEF ENGINEER — DATE

APPROVED BY BUREAU OF PUBLIC ROADS — DATE

OFFICES OF ENGINEERING, CONSTRUCTION, MAINTENANCE

APPROVED CONSTRUCTION ENGINEER — DATE
APPROVED MAINTENANCE ENGINEER — DATE
APPROVED CHIEF OF DESIGN — DATE

Rev 4/26/61.

Mar. Sign Area 480 Sq. Ft.
20'1.80' Aluminum Overhead Sign Support Structure Type C.

AUTH. NO. | DRAWN Giver
CONT. SEC. | DATE 9-8-60
REF | SCALE
SHEET 3 OF 3 | PLAN SS-66

DETAIL OF ELECTRICAL OUTLET

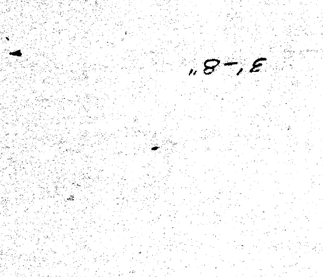

DETAIL OF ANCHOR BOLT

16 - Req'd.

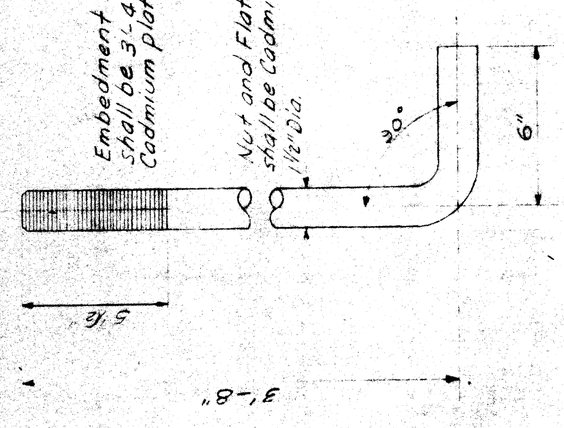

SECTION A-A

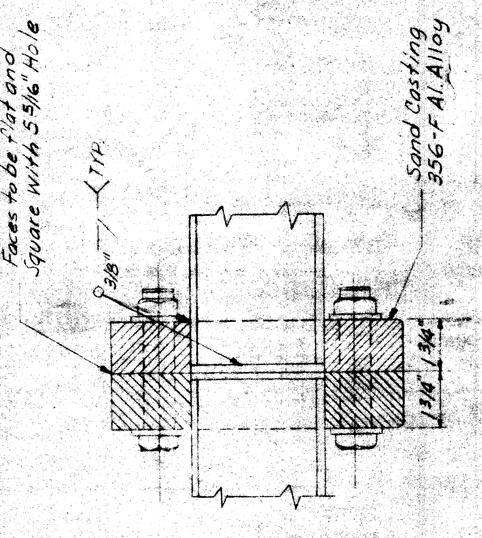

DETAIL OF FLANGE

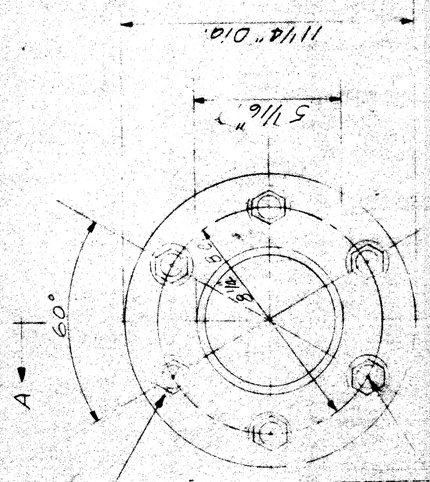

SECTION B-B

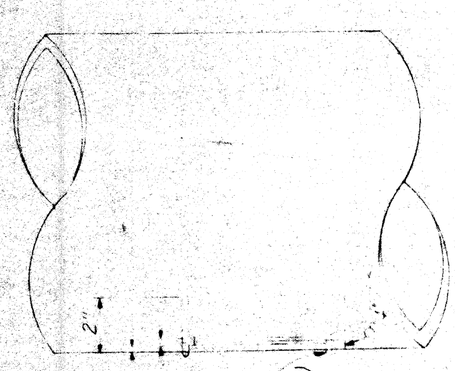

DETAIL OF BASE

32 Nuts, Req'd.
16 Washers Req'd.

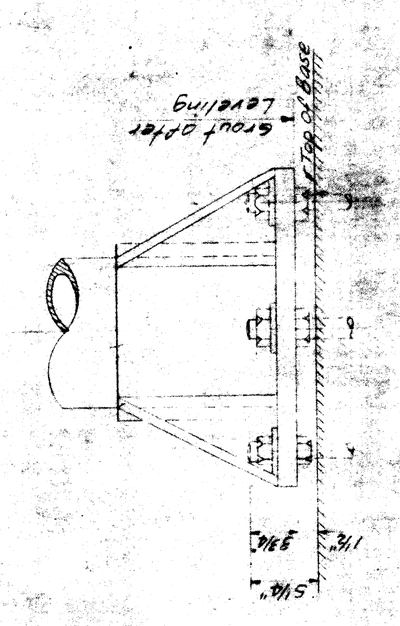

DETAIL OF BASE AND HAND HOLE UNIT

Req'd. 4 Bases
2 Hand Hole Units

HAND HOLE UNIT COVER

2-Req'd.

10-17-60

MICHIGAN STATE HIGHWAY DEPARTMENT

STANDARD PLANS FOR

HIGHWAY SIGNS AND SUPPORTS

DESIGN AND TRAFFIC DIVISIONS

CHECKED

RECOMMENDED FOR APPROVAL — ENGINEER OF TRAFFIC OPERATIONS — DATE

RECOMMENDED FOR APPROVAL — ENGINEER OF BRIDGE AND ROAD DESIGN — DATE

RECOMMENDED FOR APPROVAL — DIRECTOR OF TRAFFIC DIVISION — DATE

OFFICES OF ENGINEERING, CONSTRUCTION, MAINTENANCE

APPROVED — CONSTRUCTION ENGINEER — DATE

APPROVED — MAINTENANCE ENGINEER — DATE

APPROVED — CHIEF OF DESIGN — DATE

STATE HIGHWAY DEPARTMENT APPROVAL

APPROVED JOHN C. MACKIE, STATE HIGHWAY COMMISSIONER

BY — DIRECTOR OF ENGINEERING & CHIEF ENGINEER — DATE

APPROVED BY BUREAU OF PUBLIC ROADS — DATE

STATE PROJECT	FEDERAL PROJECT	SHEET NO.
82251	F-25(169)33	437

FILE NO.	USE	NO. 350	SERIAL
82251	F	C16	

SS-66K

Sign Area 48.0 Sq. Ft.

CONCRETE BASE FOR ALUMINUM OVERHEAD SIGN SUPPORT

STRUCTURE "SS-66"

DRAWN	AUTH. NO.	DATE	SCALE
F.O.W. 4-1-66	CONT. SEC.		
	REF.	SHEET 1 OF 1 SHEETS	PLAN SCALE

STEEL REINFORCEMENT

BAR	SIZE	DIMENSIONS	No BARS	WEIGHT
A-1	1½"ϕ	3'-6"	2	4.68
A-2	1½"ϕ	11'-3"	2	15.10
A-3	1½"ϕ	10'-8"	2	14.30
A-4	1½"ϕ	10'-2"	2	13.40
A-5	1½"ϕ	9'-6"	2	12.62
A-6	½"ϕ	13'-11"	4	87.20
B-1	1½"ϕ		4	27.20
B-2	1½"ϕ		14	95.20
B-3	1½"ϕ		2	15.30
		TOTAL WEIGHT		235#

Anchor bolts not included
Total Concrete = 10 cu.yds

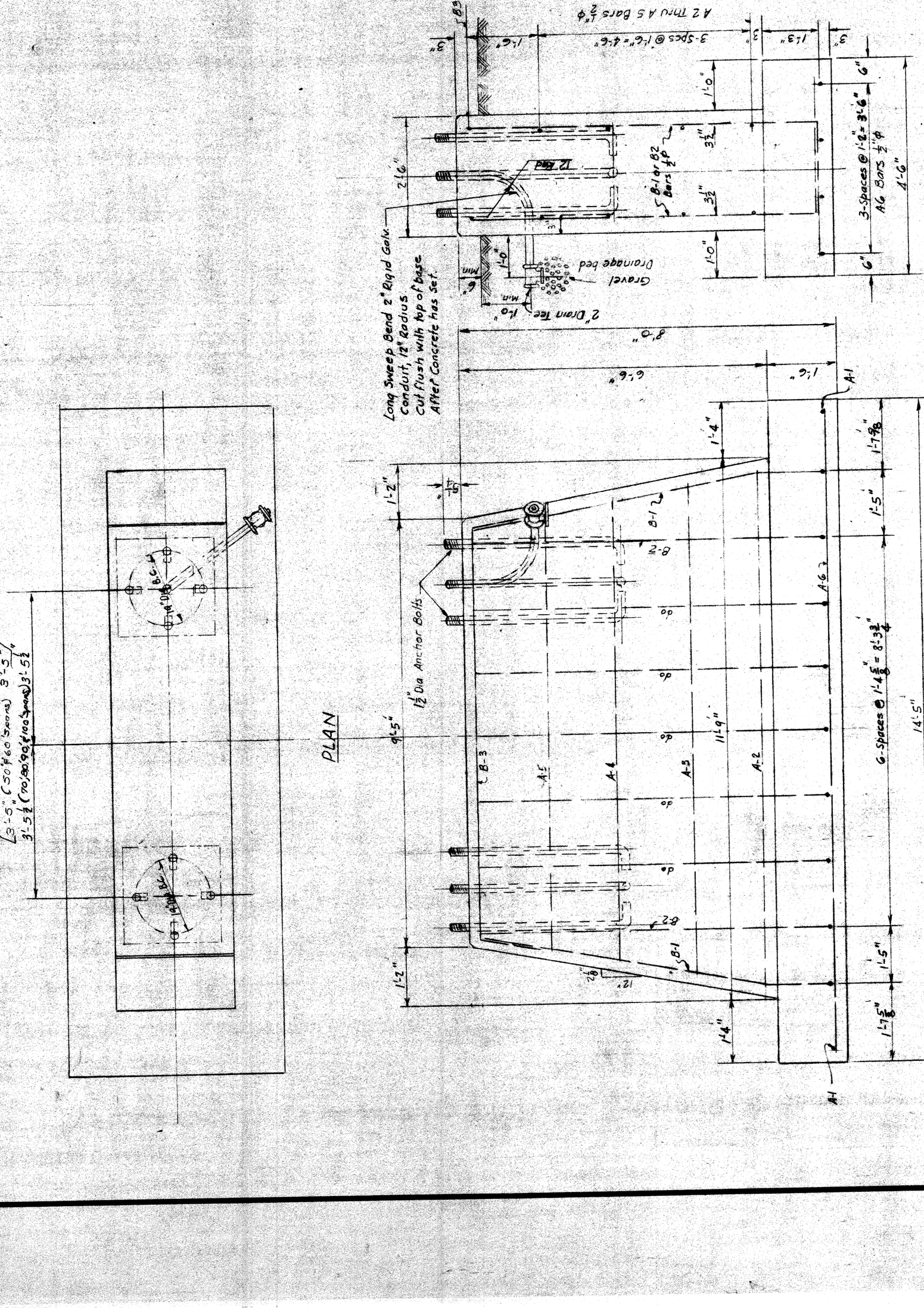

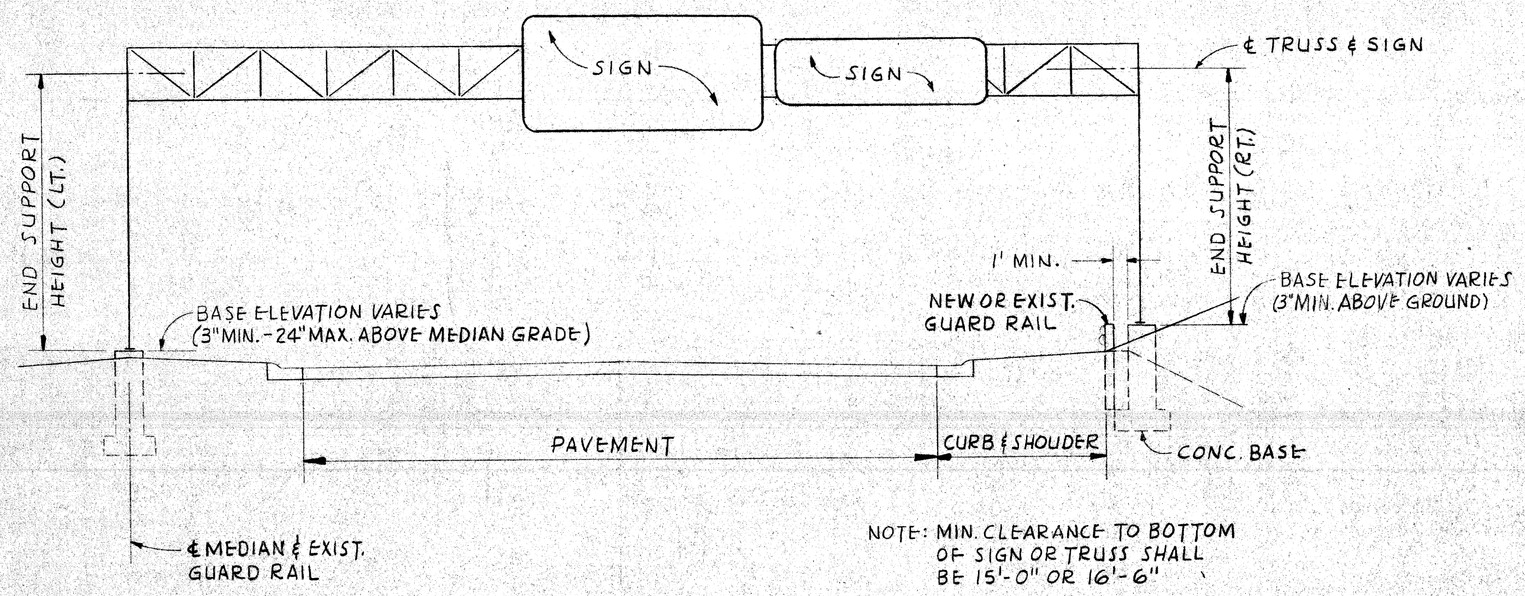

NOTE: MIN. CLEARANCE TO BOTTOM OF SIGN OR TRUSS SHALL BE 15'-0" OR 16'-6"

TYPICAL SECTION (WITH CURB)

SCALE: 1/8" = 1'-0"

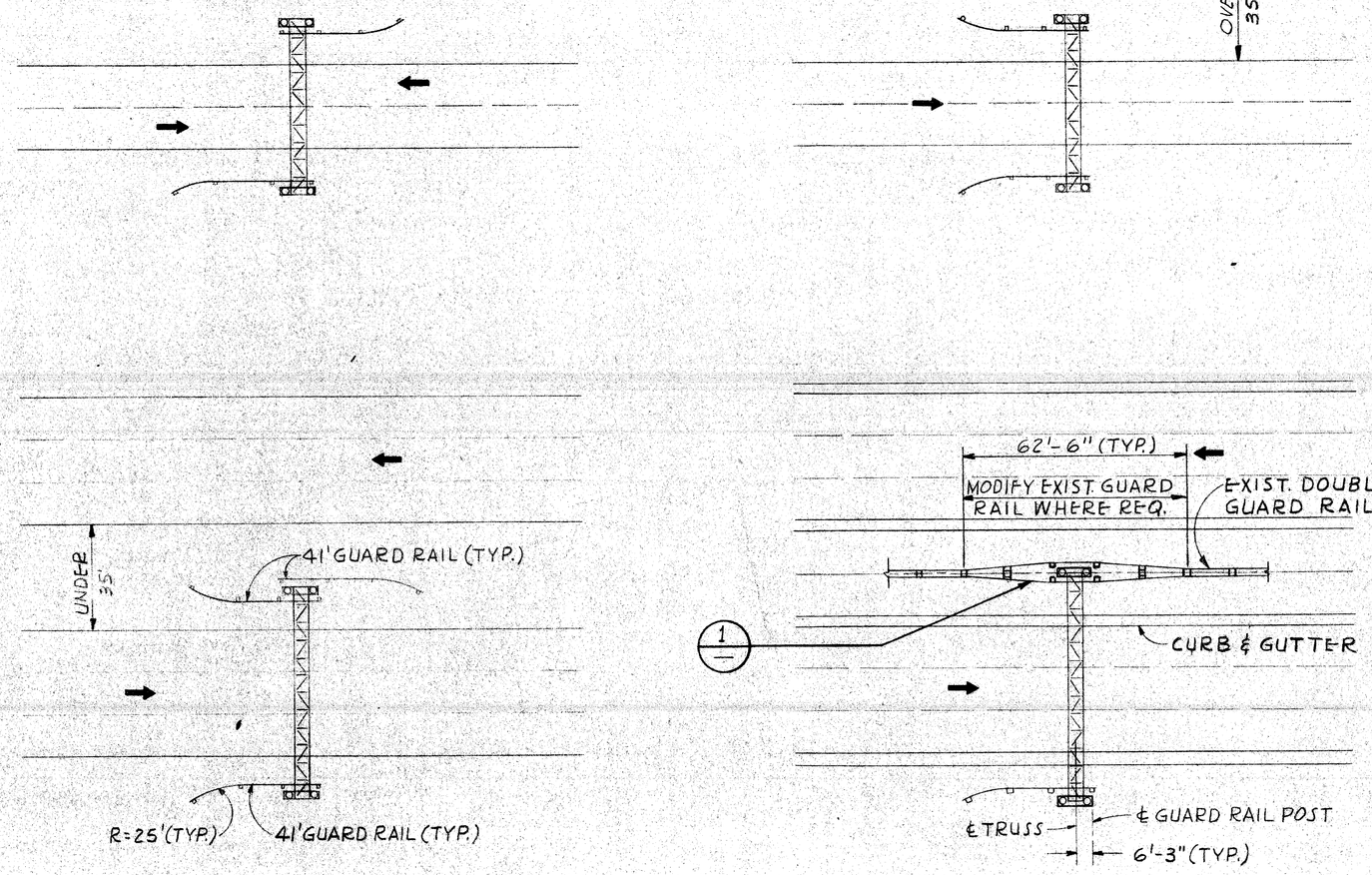

TYPICAL GUARD RAIL INSTALLATION

SECTION A/— TYP. (2 PLACES)

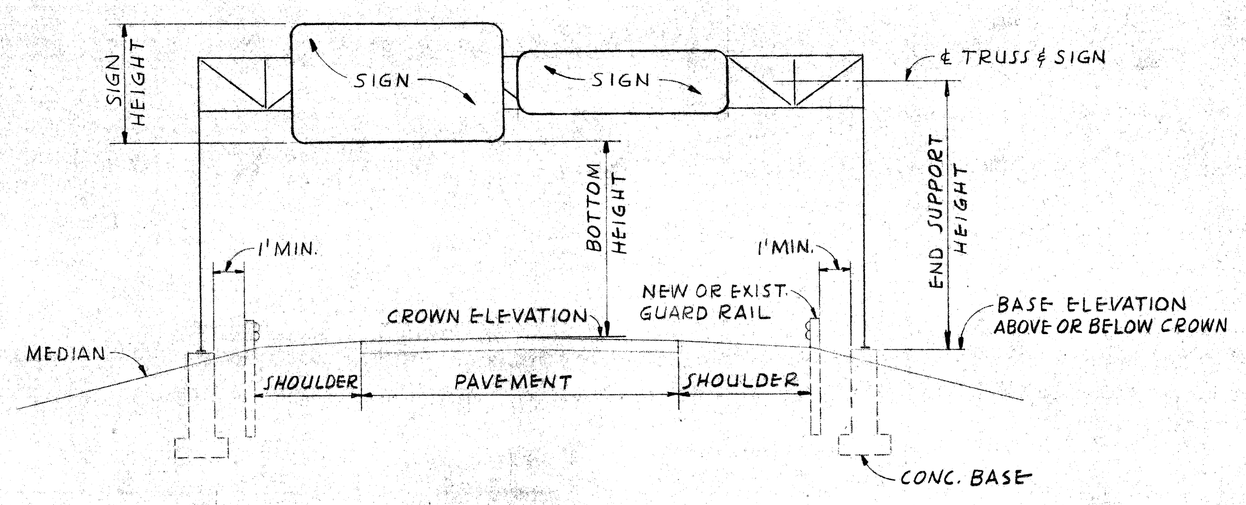

TYPICAL SECTION (WITHOUT CURB)

SCALE: 1/8" = 1'-0"

SIGN HEIGHT	15' BOTTOM HEIGHT				16'-6" BOTTOM HEIGHT			
	TYPE B TRUSS		TYPE C TRUSS		TYPE B TRUSS		TYPE C TRUSS	
	BASE ELEVATION	END SUPPORT HEIGHT	BASE ELEVATION	END SUPPORT HEIGHT	BASE ELEVATION	END SUPPORT HEIGHT	BASE ELEVATION	END SUPPORT HEIGHT
4'-0"	0	17'-0"			0	18'-6"		
4'-6"	+3"	17'-0"			+3"	18'-6"		
5'-0"	-12"	18'-6"			-12"	20'-0"		
5'-6"	-9"	↕			-9"	↕		
6'-0"	-6"	↕			-6"	↕		
6'-6"	-3"	↕			-3"	↕		
7'-0"	0	↕	-12"	19'-6"	0	↕	-12"	21'-0"
7'-6"	+3"	18'-6"	-9"	↕	+3"	20'-0"	-9"	↕
8'-0"	-12"	20'-0"	-6"	↕	-12"	21'-6"	-6"	↕
8'-6"	-9"	↕	-3"	↕	-9"	↕	-3"	↕
9'-0"	-6"	↕	0	↕	-6"	↕	0	↕
9'-6"	-3"	↕	+3"	19'-6"	-3"	↕	+3"	21'-0"
10'-0"	0	↕	-12"	21'-0"	0	↕	-12"	22'-6"
10'-6"	+3"	20'-0"	-9"	↕	+3"	21'-6"	-9"	↕
11'-0"	-12"	21'-6"	-6"	↕	-12"	23'-0"	-6"	↕
11'-6"	-9"	21'-6"	-3"	↕	-9"	23'-0"	-3"	↕
12'-0"	-6"	21'-6"	0	21'-0"	-6"	23'-0"	0	22'-6"

TABLE SHOWING BASE ELEVATIONS & END SUPPORT HEIGHTS FOR TYPICAL SECTION WITHOUT CURB

1. ASSUMED CROWN ELEVATION = 0
2. BASED ON 4:1 DITCH SLOPES

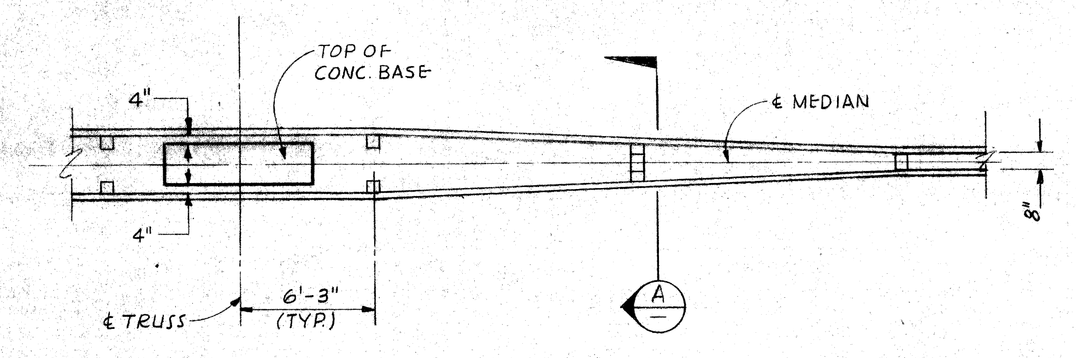

DETAIL 1/—

GENERAL NOTES

1. SEE DWG. NOS. SF-25, 68 FOR CONC. BASE.
2. SEE DWG. NOS. SF-32, 33, 34, 65, 66 & 67 FOR OVERHEAD TRUSS.
3. SEE DWG. NO. SF-41 FOR SIGN ATTACHMENT
4. SEE STD. E-4-A-137-C OR E-4-A-140 FOR GUARD RAIL INSTALLATION

MICHIGAN STATE HIGHWAY DEPARTMENT JOHN C. MACKIE COMMISSIONER TRAFFIC DIVISION	LOCATION OF SIGN, BASE & GUARD RAIL FOR OVERHEAD TRUSS	AUTH. NO.	DRAWN GIVER
		CONT. SEC.	DATE 7/19/61
		REF.	SCALE NOTED
		SHEET 1 OF 1	PLAN SF - 73

55-67

82251 F C16

432

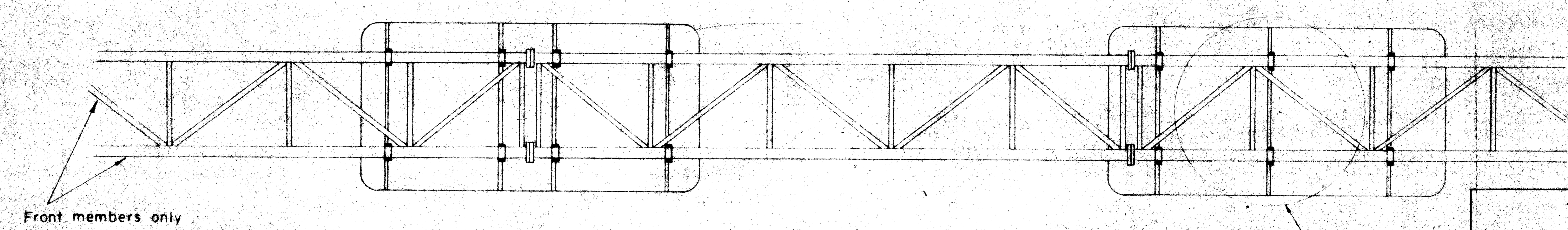

GENERAL ARRANGEMENT OF SUPPORTING CLAMPS

ON STRUCTURE

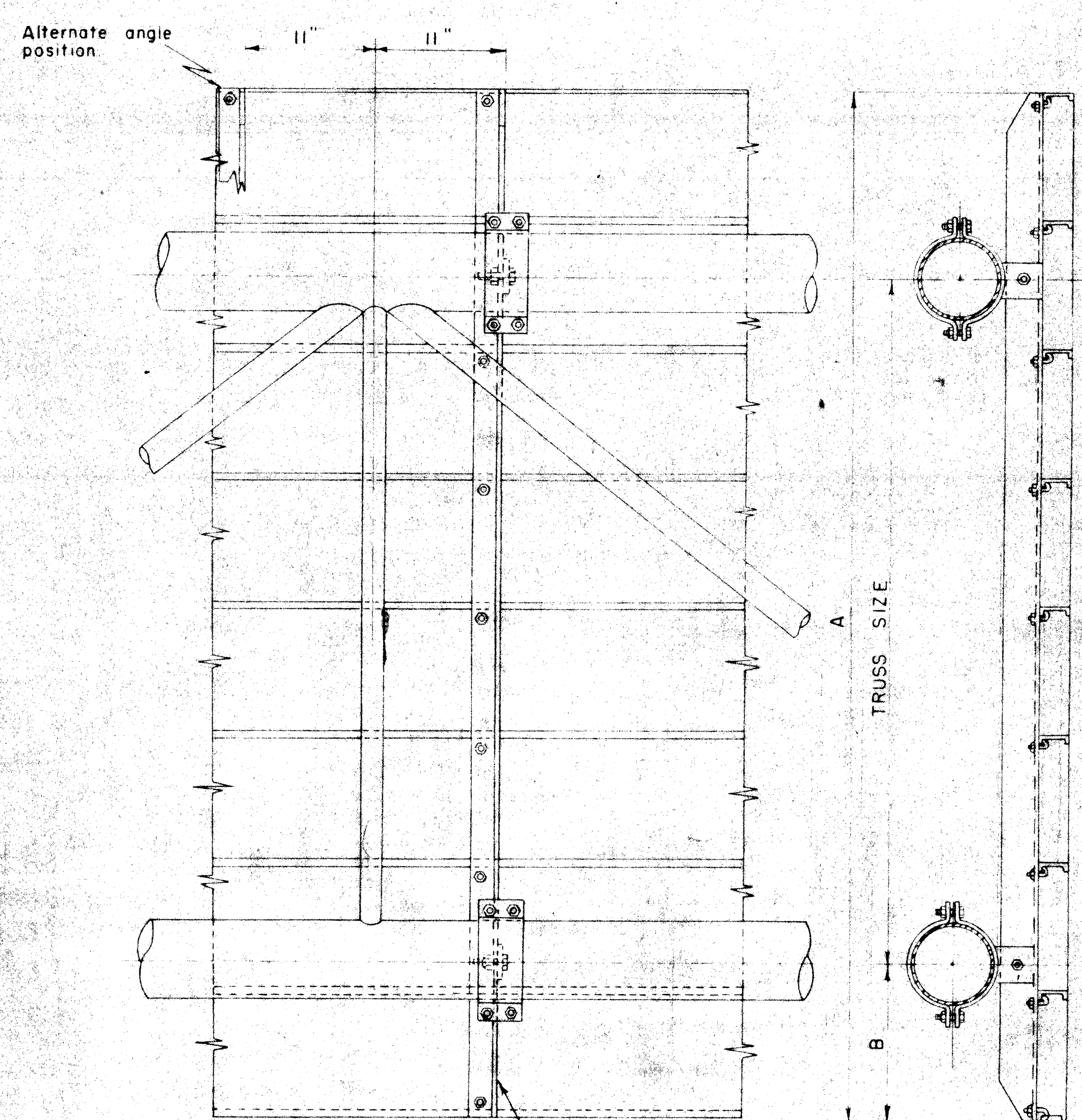

DETAIL "A"

NOTE:
Sign must be attached to truss at each panel point.

All dimensions to angle positions measured to this face.
Attach all angles as shown

WORK ORDER	ITEM NO.	SUPPORTING CLAMPS (NO)	ANGLES SIZE	ANGLES LENGTH	ANGLES NO.	POSITIONING OF ANGLES ON SIGNS: LEFT SIGN*	CENTER SIGN*	RIGHT SIGN*

TRUSS SIZE (5'-4" x 5'4") TYPE C

SIGN HEIGHT "A"	ANGLE SIZE	ANGLE LENGTH	"B"
4'-0"	2½x1½x¼	5'-6"	0'-1"
4'-6"	"	5'-6"	0'-1"
5'-0"	"	5'-6"	0'-1"
5'-6"	"	5'-6"	0'-1"
6'-0"	"	6'-0"	0'-4"
6'-6"	"	6'-6"	0'-7"
7'-0"	"	7'-0"	0'-10"
7'-6"	"	7'-6"	1'-1"
8'-0"	"	8-0"	1'-4"
8'-6"	"	8'-6"	1'-7"
9'-0"	"	9'-0"	1' 10"
9'-6"	"	9'-6"	2'-1"
10'-0"	"	10'-0"	2'-4"
10'-6"	"	10'-6"	2'-7"
11'-0"	"	11'-0"	2'-10"
11'-6"	3x2x¼	11'-6"	3'-1"
12'-0"	"	12'-0"	3'-4"

TRUSS SIZE (6'-0x5'-4") TYPE C

SIGN HEIGHT "A"	ANGLE SIZE	ANGLE LENGTH	"B"
4'-0"	3x2x¼	6'-2"	0'-1"
4'-6"	"	6'-2"	0'-1"
5'-0"	"	6'-2"	0'-1"
5'-6"	"	6'-2"	0'-1"
6'-0"	"	6'-2"	0'-1"
6'-6"	"	6'-6"	0'-2"
7'-0"	"	7'-0"	0'-5"
7'-6"	"	7'-6"	0'-8"
8'-0"	"	8'-0"	0'-11"
8'-6"	"	8'-6"	1'-2"
9'-0"	"	9'-0"	1'-5"
9'-6"	"	9'-6"	1'-8"
10'-0"	"	10'-0"	1'-11"
10'-6"	"	10'-6"	2'-2"
11'-0"	"	11'-0"	2'-5"
11'-6"	"	11'-6"	2'-8"
12'-0"	"	12'-0"	2'-11

TRUSS SIZE (7'0" x 5'-4") TYPE C

SIGN HEIGHT "A"	ANGLE SIZE	ANGLE LENGTH	"B"
4'-0"	3x2x¼	7'-2"	0'-1"
4'-6"	"	7'-2"	0'-1"
5'-0"	"	7'-2"	0'-1"
5'-6"	"	7'-2"	0'-1"
6'-0"	"	7'-2"	0'-1"
6'-6"	"	7'-2"	0'-1"
7'-0"	"	7'-2"	0'-1"
7'-6"	"	7'-6"	0'-2"
8'-0"	"	8'-0"	0'-5"
8'-6"	"	8'-6"	0'-8"
9'-0"	"	9'-0"	0'-11"
9'-6"	"	9'-6"	1'-2"
10'-0"	"	10'-0"	1'-5"
10'-6"	"	10'-6"	1'-8"
11'-0"	"	11'-0"	1'-11"
11'-6"	"	11'-6"	2'-2"
12'-0"	"	12'-0"	2'-5"

TRUSS SIZE (3 FT.) TYPE B

SIGN HEIGHT "A"	ANGLE SIZE	ANGLE LENGTH	"B"
4'-0"	2x1½x¼	4'-0"	0'-5"
4'-6"	"	4'-6"	0'-8"
5'-0"	"	5'-0"	0'-11"
5'-6"	"	5'-6"	1'-2"
6'-0"	"	6'-0"	1'-5"
6'-6"	"	6'-6"	1'-8"
7'-0"	"	7'-0"	1'-11"
7'-6"	"	7'-6"	2'-2"
8'-0"	3x2x¼	8'-0"	2'-5"
8'-6"	"	8'-6"	2'-8"
9'-0"	"	9'-0"	2'-11"
9'-6"	"	9'-6"	3'-2"
10'-0"	"	10'-0"	3'-5"
10'-6"	3½x2½x5/16	10'-6"	3'-8"
11'-0"	"	11'-0"	3'-11"
11'-6"	"	11'-6"	4'-2"
12'-0"	"	12'-0"	4'-5"

TRUSS SIZE (3½ FT.) TYPE B

SIGN HEIGHT "A"	ANGLE SIZE	ANGLE LENGTH	"B"
4'-0"	2x1½x¼	4'-0"	0'-2"
4'-6"	"	4'-6"	0'-5"
5'-0"	"	5'-0"	0'-8"
5'-6"	"	5'-6"	0'-11"
6'-0"	"	6'-0"	1'-2"
6'-6"	"	6'-6"	1'-5"
7'-0"	"	7'-0"	1'-8"
7'-6"	"	7'-6"	1'-11"
8'-0"	"	8'-0"	2'-2"
8'-6"	3x2x¼	8'-6"	2'-5"
9'-0"	"	9'-0"	2'-8"
9'-6"	"	9'-6"	2'-11"
10'-0"	"	10'-0"	3'-2"
10'-6"	"	10'-6"	3'-5"
11'-0"	3½x2½x5/16	11'-0"	3'-8"
11'-6"	"	11'-6"	3'-11"
12'-0"	"	12'-0"	4'-2"

TRUSS SIZE (4 FT.) TYPE B

SIGN HEIGHT "A"	ANGLE SIZE	ANGLE LENGTH	"B"
4'-6"	2x1½x¼	4'-6"	0'-2"
5'-0"	"	5'-0"	0'-5"
5'-6"	"	5'-6"	0'-8"
6'-0"	"	6'-0"	0'-11"
6'-6"	"	6'-6"	1'-2"
7'-0"	"	7'-0"	1'-5"
7'-6"	"	7'-6"	1'-8"
8'-0"	"	8'-0"	1'-11"
8'-6"	"	8'-6"	2'-2"
9'-0"	3x2x¼	9'-0"	2'-5"
9'-6"	"	9'-6"	2'-8"
10'-0"	"	10'-0"	2'-11"
10'-6"	"	10'-6"	3'-2"
11'-0"	"	11'-0"	3'-5"
11'-6"	3½x2½x5/16	11'-6"	3'-8"
12'-0"	"	12'-0"	3'-11"
4'-0"	2x1½x¼	4'-2"	0'-1"

* Dimensions shown are measured from left end of sign backs as shown in upper left corner of drawing.

SIGN ATTACHMENT-ALUMINUM OVERHEAD STRUCTURES-TYPE B

AUTH. NO.
REVISIONS 1-19-59
DRAWN BY Marsh
DATE 11-12-58
SCALE —
SHEET NO. OF FILE NO. SF-41

SS-68 8225I F C16

MICHIGAN STATE HIGHWAY DEPARTMENT

STANDARD PLANS FOR HIGHWAY SIGNS AND SUPPORTS

DESIGN AND TRAFFIC DIVISIONS

CHECKED — ENGINEER OF TRAFFIC OPERATIONS — DATE 7-8-59
RECOMMENDED FOR APPROVAL — ENGINEER OF BRIDGE AND ROAD DESIGN — DATE
RECOMMENDED FOR APPROVAL — DIRECTOR OF TRAFFIC DIVISION — DATE

OFFICES OF ENGINEERING, CONSTRUCTION, MAINTENANCE

APPROVED — CONSTRUCTION ENGINEER — DATE 9-30-59
APPROVED — MAINTENANCE ENGINEER — DATE 8-31-59
APPROVED — CHIEF ENGINEER — DATE

STATE HIGHWAY DEPARTMENT APPROVAL

APPROVED JOHN C. MACKIE, STATE HIGHWAY COMMISSIONER
BY — DIRECTOR OF ENGINEERING — DATE

APPROVED BY BUREAU OF PUBLIC ROADS — DATE

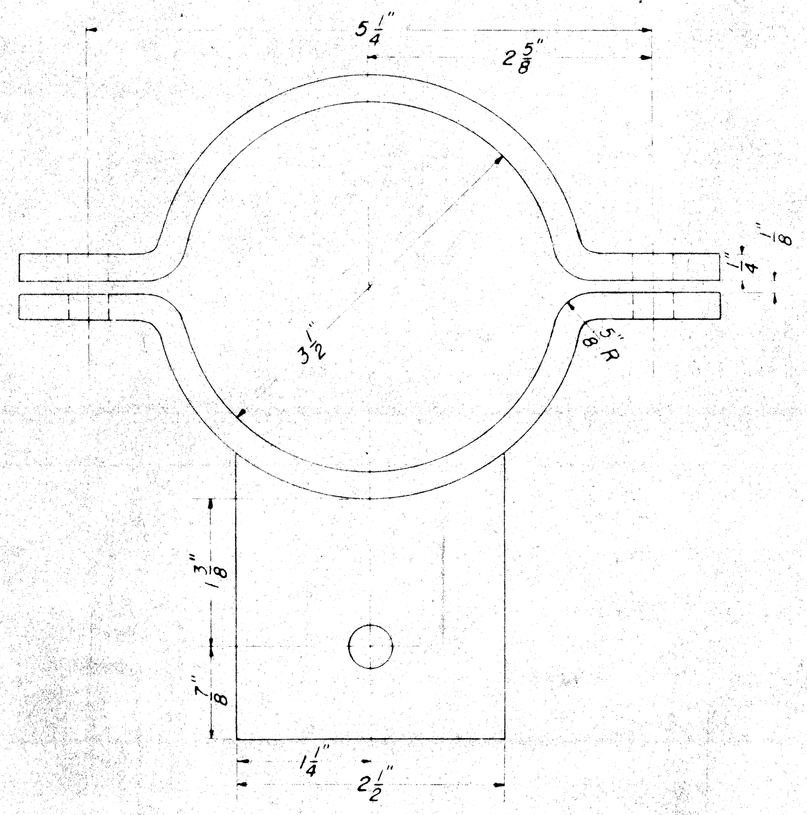

TOP VIEW

MATERIALS

Clamp - 6061-T6 Alum Alloy

Washers - 3/8" Flat Alclad 2024-T4 Alum Alloy

Stop Nuts - 3/8"-16 Elastic 68 NE-066 or equivalent

Bolts - 3/8"x1 3/4" Alclad 2024-T4 Alum Alloy threaded full length

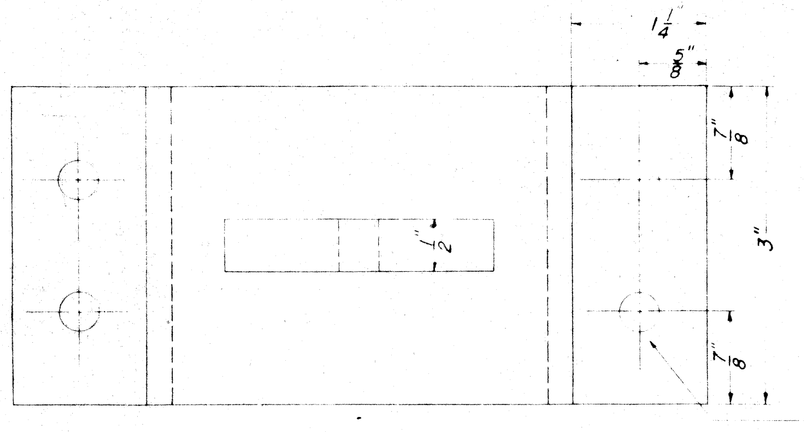

FRONT VIEW

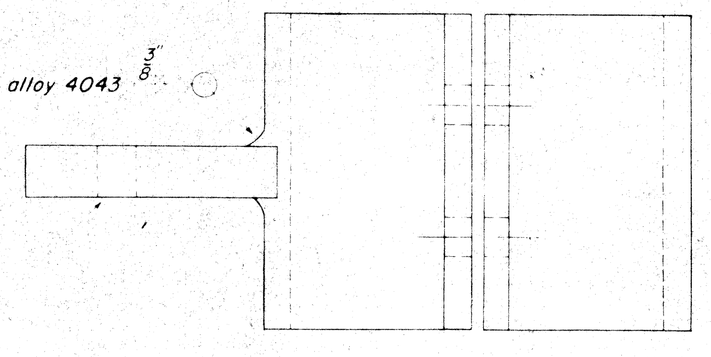

13/32" holes in clamp and bracket

SIDE VIEW

OFFICES OF ENGINEERING, CONSTRUCTION, MAINTENANCE

APPROVED _____ CONSTRUCTION ENGINEER — DATE 8-31-59

APPROVED _____ MAINTENANCE ENGINEER — DATE 10-1-59

APPROVED _____ CHIEF ENGINEER — DATE

STATE HIGHWAY DEPARTMENT APPROVAL

APPROVED JOHN C. MACKIE, STATE HIGHWAY COMMISSIONER

BY _____ DIRECTOR OF ENGINEERING — DATE 10-15-59

APPROVED BY BUREAU OF PUBLIC ROADS — DATE

MICHIGAN STATE HIGHWAY DEPARTMENT

STANDARD PLANS FOR

HIGHWAY SIGNS AND SUPPORTS

DESIGN AND TRAFFIC DIVISIONS

CHECKED _____ ENGINEER OF TRAFFIC OPERATIONS — DATE 1-8-57

RECOMMENDED FOR APPROVAL _____ ENGINEER OF BRIDGE AND ROAD DESIGN — DATE 2-12-57

RECOMMENDED FOR APPROVAL _____ DIRECTOR OF TRAFFIC DIVISION — DATE

CLAMPS FOR OVERHEAD ALUMINUM STRUCTURES TYPE B

AUTH. NO. | DRAWN BY RWT

REVISIONS | DATE 12-19-58 | SCALE NONE

SHEET NO. 1 OF 1 | FILE NO. SF-44

SS-69 | FILE NO. U.S. NO. STATE NO. | 82251 F C16 | STATE PROJECT 82251 | FEDERAL PROJECT I-75-1(42)53 | SHEET NO. 491

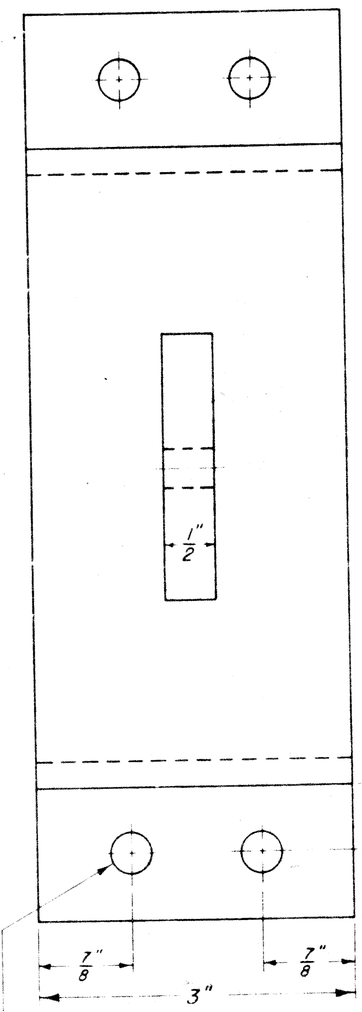

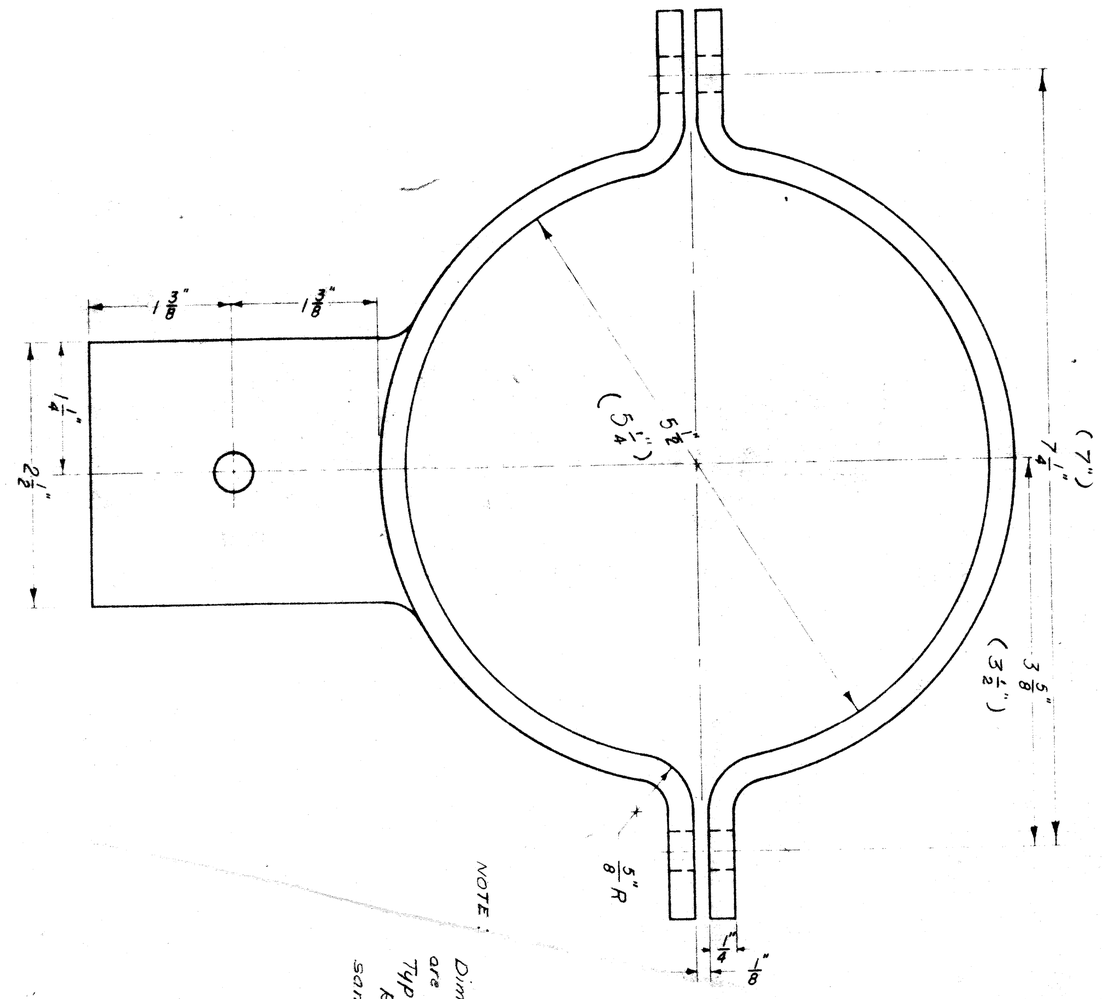

NOTE:

Dimensions shown in parenthesis are applicable to clamps for use on Type C structures.

Remaining dimensions are the same for both Types B & C structures.

MATERIALS:

Clamps	6061 - T6 Alum. Alloy
Washers	3/8" flat Alclad 2024-T4 Alum. Alloy
Stop Nuts	3/8" Elastic 68 NE-066 or equivalent
Bolts	3/8" x 1 3/4" Alclad 2024-T4 Alum. Alloy threaded full length

13/32" holes in clamp and bracket

Consumable electrode alum alloy 4043

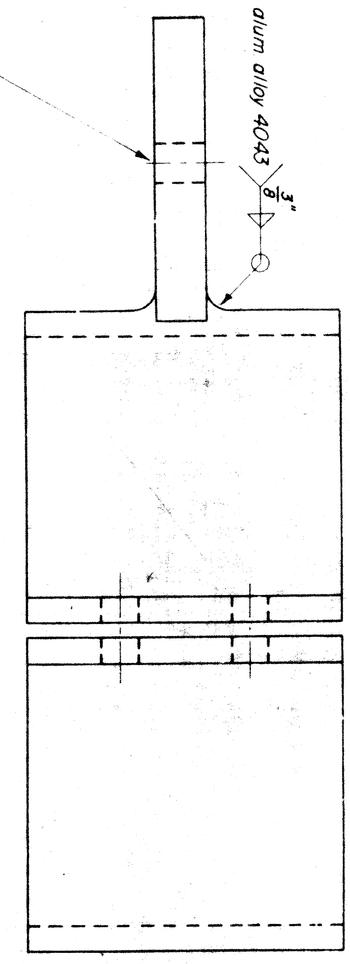

CLAMPS FOR OVERHEAD ALUMINUM STRUCTURES TYPE B & C

AUTH. NO.

REVISIONS

DRAWN BY —

DATE 11-26-57

SCALE

SHEET NO. 1 OF 1 | FILE NO. SF-45

SS-70 | FILE NO. USED SYMBOL 82251 F C16 | STATE PROJECT 82251 | FEDERAL PROJECT 435

MICHIGAN STATE HIGHWAY DEPARTMENT

STANDARD PLANS FOR

HIGHWAY SIGNS AND SUPPORTS

DESIGN AND TRAFFIC DIVISIONS

CHECKED — William L. Mason, ENGINEER OF TRAFFIC OPERATIONS — 1-8-59 DATE

RECOMMENDED FOR APPROVAL — ENGINEER OF BRIDGE AND ROAD DESIGN — DATE

RECOMMENDED FOR APPROVAL — Harold N. Bacon, DIRECTOR OF TRAFFIC DIVISION — 1-16-59 DATE

OFFICES OF ENGINEERING, CONSTRUCTION, MAINTENANCE

APPROVED — Guy Laird, CONSTRUCTION ENGINEER — 9-30-59 DATE

APPROVED — Sam Luke, MAINTENANCE ENGINEER — 8-31-59 DATE

APPROVED — T. A. Weiden, CHIEF ENGINEER — 10-1-59 DATE

STATE HIGHWAY DEPARTMENT APPROVAL

APPROVED JOHN C. MACKIE, STATE HIGHWAY COMMISSIONER

BY John E. Mifsud, DIRECTOR OF ENGINEERING — 10-1-59 DATE

APPROVED BY BUREAU OF PUBLIC ROADS — DATE