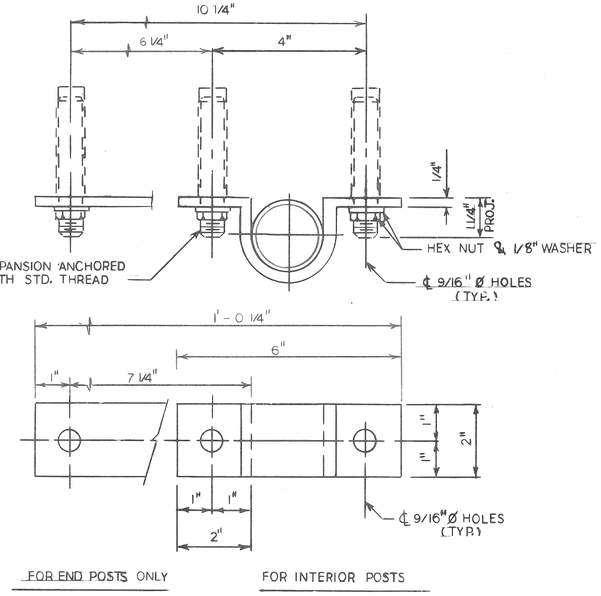

BRACKET DETAIL

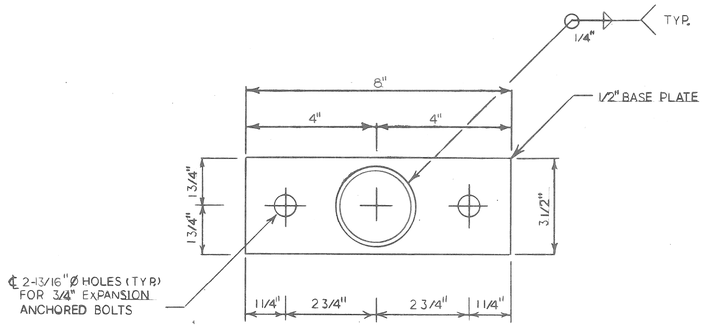

FENCE POST BASE DETAIL

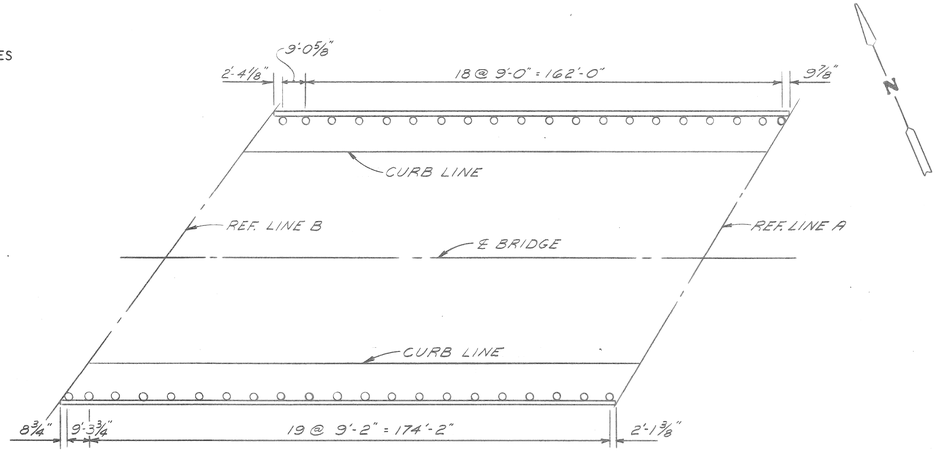

PLAN

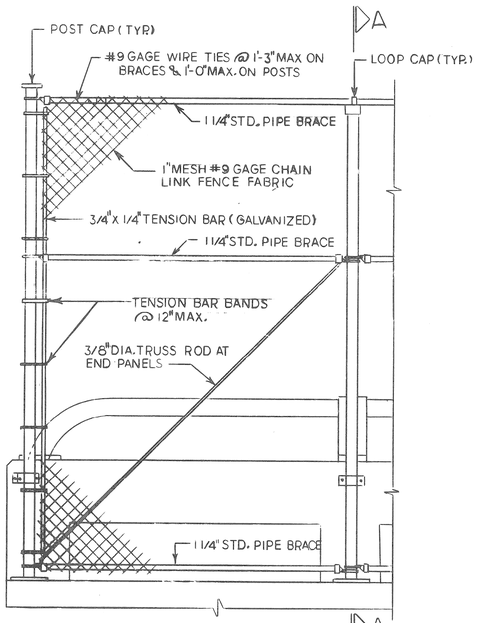

TYPICAL ELEVATION

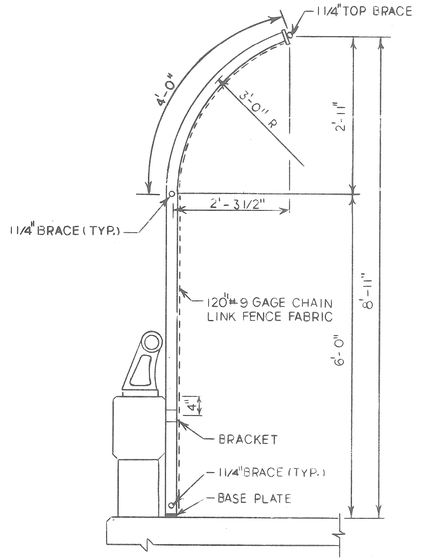

SECTION A-A

FENCING NOTES

EXPANSION ANCORED BOLTS OF THE SIZE INDICATED SHALL BE BETHLEHEM MINE ROOF EXPANSION TYPE WITH K-1 SHELL, PHILLIPS RED HEAD SELF DRILLING CONCRETE ANCHORS, CHICAGO EXPANSION BOLT CO.- SPECIAL SELF DRILLING ANCHOR OR APPROVED EQUAL.

ALL WORK SHALL CONFORM TO THE M.D.O.T SPECIFICATIONS FOR HIGHWAY CONSTRUCTION-1984 EDITION EXCEPT AS SHOWN OR NOTED ON THE PLAN.

THE POSTS SHALL BE ROUND POST HAVING AN OUTSIDE DIAMETER OF 2.875" AND WEIGHT OF 5.79 LBS. PER FT. GALVANIZED. NOMINAL 1 1/4" Ø PIPE SHALL BE 1 5/8" OUTSIDE DIAMETER STEEL PIPE OR TUBING WEIGHING 2.27 LBS. PER FT. GALVANIZED.

ALL POSTS AND TUBING SHALL BE FURNISHED WITH MANUFACTURERS STANDARD CONNECTIONS AND ITS MINIMUM WEIGHT SHALL BE WITHIN 5% OF THAT SPECIFIED. POSTS SHALL BE BENT IN THE SHOP AS SHOWN ON THE PLANS.

ALL COMPONENTS ARE TO BE GALVANIZED IN ACCORDANCE WITH A.S.T.M. A-153 AFTER FABRICATION.

FABRIC FASTENERS SHALL BE DOUBLE TWISTED, #9 GUAGE GALVANIZED STEEL.

ALL FABRIC OR CHAIN LINK FENCE SHALL BE FURNISHED WITH KNUCKLING AT BOTH SELVAGES.

TENSION BARS SHALL BE 3/4" X 1/4" GALVANIZED STEEL.

FENCE FABRIC SHALL BE GALVANIZED, #9 GAGE WITH A 1" MESH.

THE BID ITEM "PEDESTRIAN FENCING - STRUCTURES" SHALL INCLUDES THE FABRIC, POSTS BRACES, ANCHORED BOLTS, PIPE, BRACKETS, BASE PLATES AND ALL SUITABLE CONNECTIONS AND FITTINGS.

THE CONTRACTOR WILL BE FURNISHED WITH PLANS OF THE EXISTING STRUCTURE IF REQUESTED, HE SHALL ALSO VERIFY FIELD CONDITIONS BEFORE FABRICATION.

THE PAY LIMITS FOR "PEDESTRIAN FENCING - STRUCTURES" IS MEASURED FROM THE TOP OF SIDEWALK TO TOP RAIL OF FENCE.

CARE SHALL BE TAKEN SO THAT DEBRIS DOES NOT FALL FROM STRUCTURE.

WHERE SIGNS MOUNTED ON BRIDGE FASCIAS INTERFERE WITH CONSTRUCTION, THEY SHALL BE REMOVED AND RESET AT THE CONTRACTORS EXPENSE.

CARE IS TO BE TAKEN IN PLACING ANCHORED BOLTS AND BRACKETS SO AS TO INSURE THAT THE BRACKETS HOLD THE POSTS FIRMLY AGAINST CONCRETE; SHIM IF NECESSARY.

2" X 2 1/4" H POST WEIGHING 4.1 LBS PER FT. GALVANIZED MAY BE USED AS AN OPTION FOR THE ROUND POST.

GROUNDING NOTES AND DETAIL

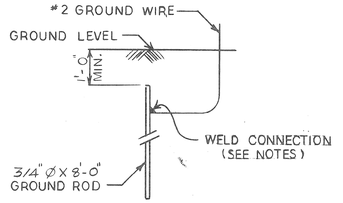

MAINTAIN ONE FOOT MINIMUM COVER OVER GROUND WIRE AND GROUND ROD.

ALL UNDERGROUND CONNECTIONS SHALL BE MADE BY CADWELD, THERMITE, GAS OR ARC WELD.

EXPOSED CONNECTIONS MAY BE SPLIT BOLT OR CLAMP TYPE.

GROUND WIRE SHALL BE BARE #2 AWG AND SHALL CONFORM TO THE LATEST REVISION OF THE APPLICABLE CURRENT ASTM SPECIFICATION ASTM B 33 FOR TINNED SOFT OR ANNEALED COPPER WIRE FOR ELECTRICAL PURPOSES.

GROUND ROD SHALL BE STEEL, COPPER CLAD ROD 3/4 MIN. DIA. AND 8'-0" LONG.

MISCELLANEOUS QUANTITIES

ITEM		UNIT	AMOUNT
PEDESTRIAN	FENCING — STRUCTURES	S.F.T.	3546
ELECTRICAL	GROUNDING SYSTEM	EACH	1

revisions			
no.	date	dr'n ck'd ap'vd	date

designed by H. DICKOW

drawn by H. DICKOW

checked by

approved:

STRUCTURAL ENGINEER

CITY OF DETROIT

city engineering department

for MICHIGAN DEPARTMENT OF TRANSPORTATION

BRIDGE PROTECTIVE SCREENING DETAILS

GRAND RIVER CROSSING FISHER FWY (I-75) IN DETROIT

S19 OF 82195

a.o. 87-22-21

contract no.

sheet 2 of 3

date 10-1-87

BRUNING 44-131 68960

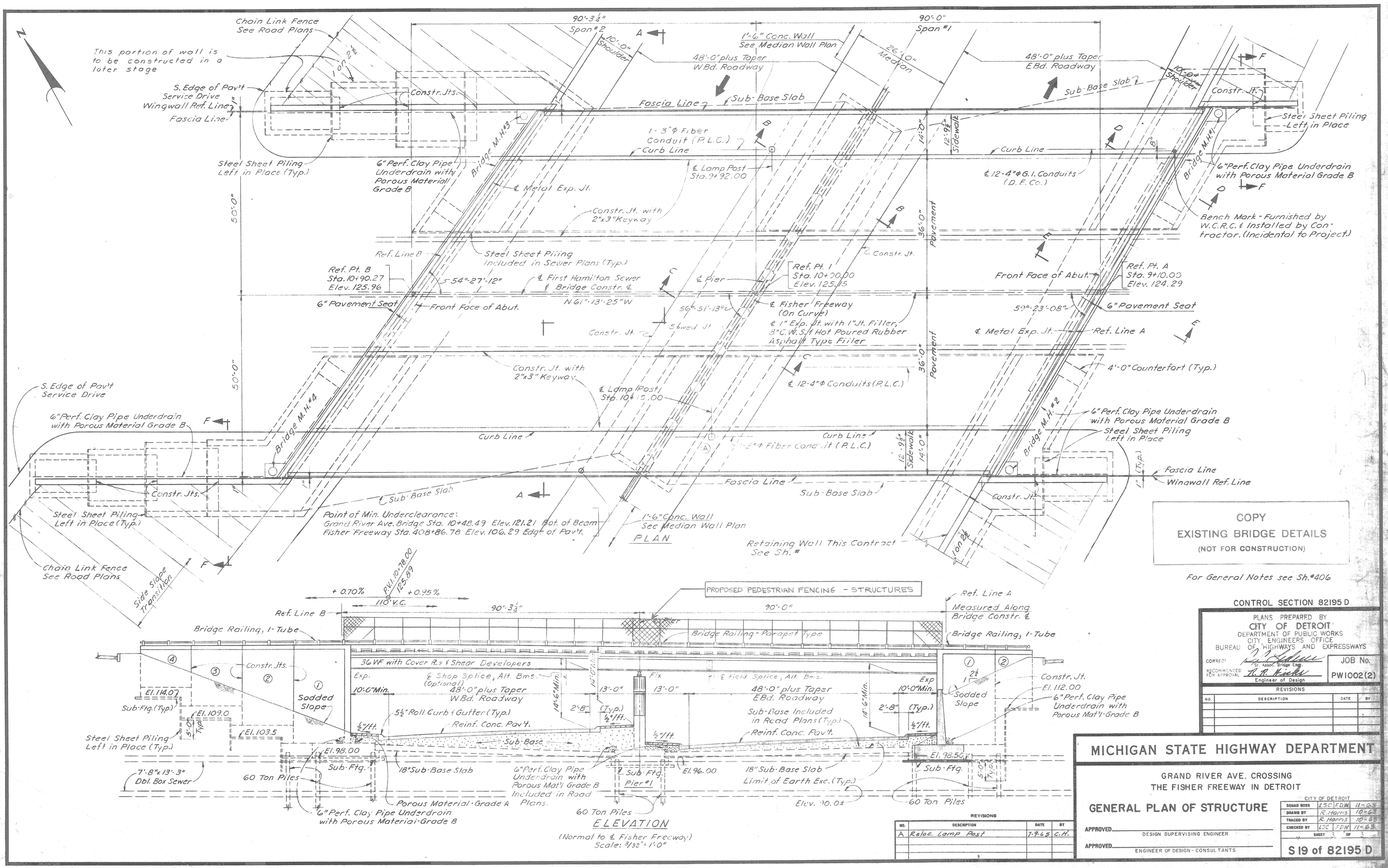

COPY
EXISTING BRIDGE DETAILS
(NOT FOR CONSTRUCTION)

For General Notes see Sh. #406

CONTROL SECTION 82195 D

PLANS PREPARED BY
CITY OF DETROIT
DEPARTMENT OF PUBLIC WORKS
CITY ENGINEERS OFFICE
BUREAU OF HIGHWAYS AND EXPRESSWAYS

CORRECT — Sr. Assoc. Bridge Engr.
RECOMMENDED FOR APPROVAL — Engineer of Design

JOB No. PW1002(2)

REVISIONS

NO.	DESCRIPTION	DATE	BY

MICHIGAN STATE HIGHWAY DEPARTMENT

GRAND RIVER AVE. CROSSING
THE FISHER FREEWAY IN DETROIT

GENERAL PLAN OF STRUCTURE

APPROVED _____ DESIGN SUPERVISING ENGINEER

APPROVED _____ ENGINEER OF DESIGN - CONSULTANTS

CITY OF DETROIT

SQUAD BOSS	LSC	FDW	11-63
DRAWN BY	R. Harris		10-63
TRACED BY	R. Harris		10-63
CHECKED BY	LSC	FDW	11-63

SHEET 3 OF 3

S 19 of 82195 D

REVISIONS

NO.	DESCRIPTION	DATE	BY
A	Reloc. Lamp Post	7-9-65	C.H.