NOTE:

All Water Alteration Quantities are shown on Drawing No. 3

Note "A"
Contractor shall remove existing Fire Hydrant. Hydrant removal is incidental to Water Main Construction.

Note "B"
Contractor shall adjust existing Gate Well Cover to suit proposed grade.

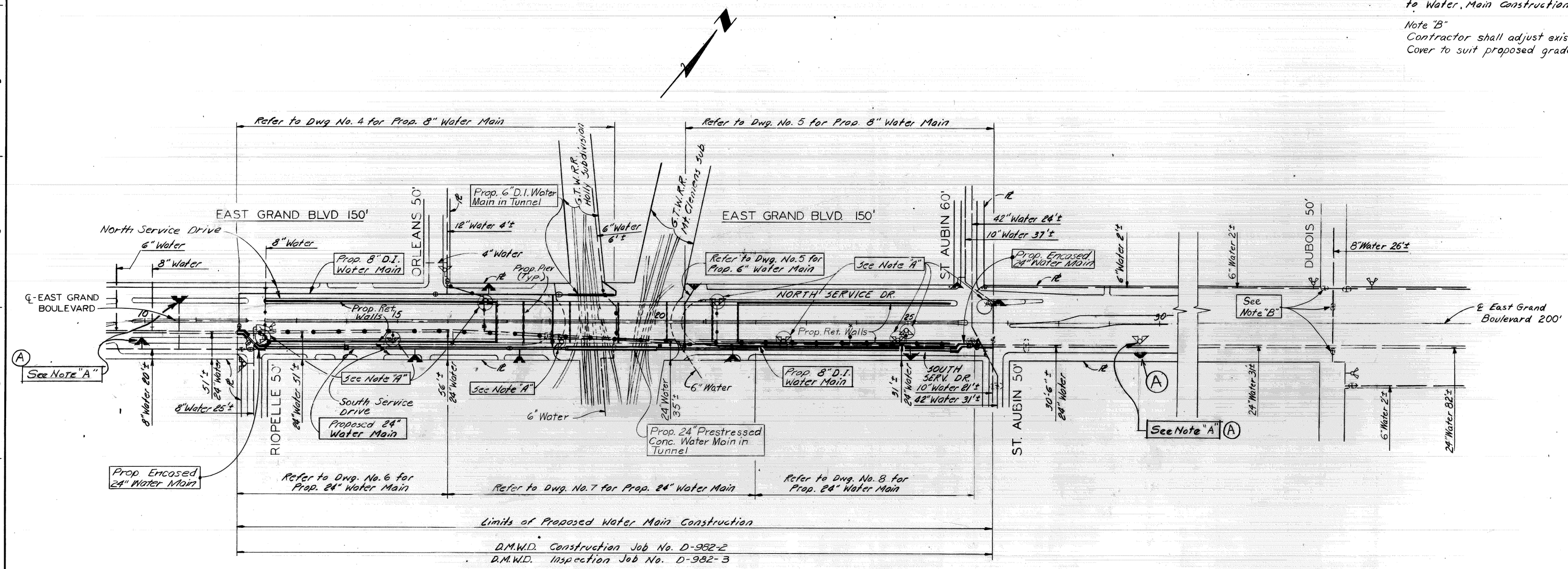

GENERAL PLAN
Scale: 1" = 100'

T4000(3)

21-M

DETROIT METRO WATER DEPARTMENT
WATER SYSTEM

EGB-1

CORRECT J.H.W. / SIGNED J.H.W. / DATE 4-27-72	APPROVED	APPROVED	
JOB NO. D-982-1		DRAWING NO. 1 OF 14	

(A)	Added 3 Hydrant relocations	DKC	7-17-72			
COOR'D	DESCRIPTION	DR'N	CK'D	APV'D	DATE	

REVISIONS LOCATED BY COORDINATES ON SHEET

REFERENCE DRAWINGS

DESIGNED BY	B. Comly
DRAWN BY	B.C./A.G.
TRACED BY	A.G.
CHECKED BY	

APPROVED:

CITY ENGINEER

CITY OF DETROIT
DEPARTMENT OF PUBLIC WORKS
CITY ENGINEERS OFFICE

EAST GRAND BOULEVARD OVER GRAND TRUNK RAILROAD
GRADE SEPARATION-WATER MAIN ALTERATIONS

GENERAL PLAN

COUNTY PROJECT

COUNTY JOB

ISSUE NO.

DATE

SHEET NO. 2

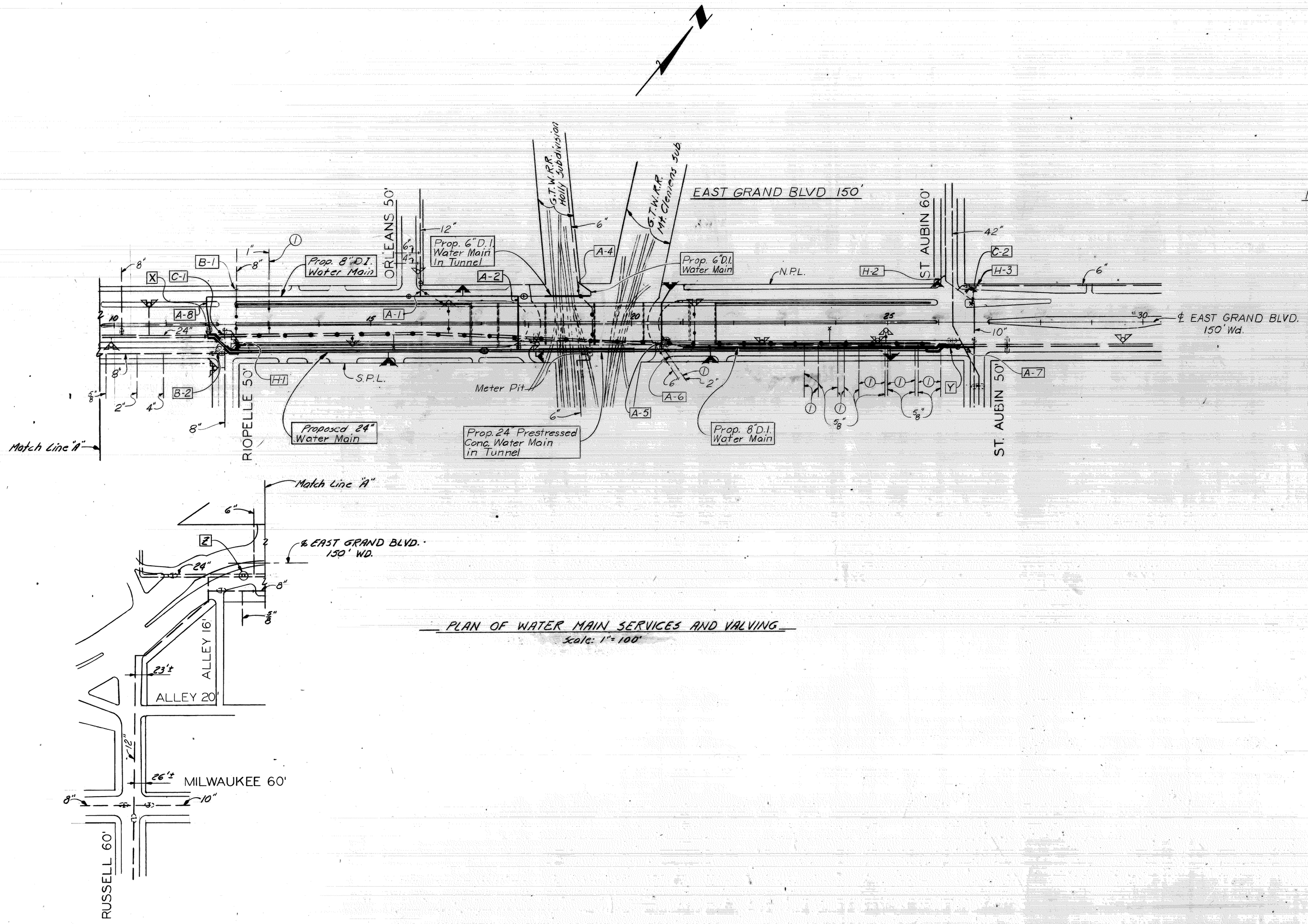

PLAN OF WATER MAIN SERVICES AND VALVING
Scale: 1" = 100'

Notes:

- All Water Alteration Quantities are shown on Dwg. No. 3

NOTES FOR WATER MAIN SERVICES

Services larger than 2" in Diameter are Water Mains (Not Services) insofar as this Contract is concerned.

Excavation and backfilling for the entire work shall be done by the Contractor.

"Service Abandonments" shall be as specified in the proposal.

The Contractor shall furnish and install all water works material required for the entire Contract except for service connection materials.

Existing Service Connections in the vicinity of Contractor's Trench are shown in accordance with D.M.W.D. records and no guarantee is made as to completeness or accuracy.

(1) Service Transfers - 12 each

Services not noted above are for informational purposes only

NOTES FOR VALVING AND SEQUENCE OF OPERATIONS

Boxed letters and numbers indicate connections. Refer to Dwgs. No. 9 & 10

Valve No's. " shown on this Dwg. refer to the valves mentioned in the "Sequence of Operations" portion of the Water Main Alterations Specifications which are included in the proposal.

Valves indicated with Suffix "N" refer to new valves which are to be installed.

Valves indicated with Prefix "B" refer to Blow-off Valves.

T4000(3)

21-M

DETROIT METRO WATER DEPARTMENT
WATER SYSTEM

CORRECT J.H.W. CHECKED J.H.W. DATE 4-21-72 | APPROVED H.B. Ence | APPROVED H.B. Wenger ASSISTANT CHIEF ENGINEER | JOB NO. D-982-1 | DRAWING NO. 2 OF 14

EGB-1

						REFERENCE DRAWINGS	DESIGNED BY	R. Bunce
							DRAWN BY	L.G.
							TRACED BY	
COOR'D	DESCRIPTION	DR'N	CK'D	AP'VD	DATE		CHECKED BY	

REVISIONS LOCATED BY COORDINATES ON SHEET

APPROVED:

CITY ENGINEER

CITY OF DETROIT
DEPARTMENT OF PUBLIC WORKS
CITY ENGINEERS OFFICE

EAST GRAND BOULEVARD OVER GRAND TRUNK RAILROAD
GRADE SEPARATION - WATER MAIN ALTERATIONS

WATER SYSTEM ALTERATIONS
WATER MAIN SERVICES & VALVING

COUNTY PROJECT | COUNTY JOB | ISSUE NO. | DATE | SHEET NO. 3

GENERAL NOTES

Existing Water Mains, as shown, indicate approximate location only as shown by D.M.W.D. records and no guarantee is made as to completeness or accuracy.

Elevations of Existing Water Mains are not known. Approximate elevations shown on the profiles are based on the assumption of 5' average depth. The grades of the Proposed Water Mains are subject to change to suit actual elevations of Existing Water Mains.

Excavation and backfilling for the entire work shall be done by the Contractor. "Service Abandonments" shall be as specified in the Proposal.

The Contractor shall furnish and install all water-works material required for the entire Contract, except for service connections, transfers and abandonments.

All Water Main connections shall be made by Contractor.

Services larger than 2" in diameter are "Water Mains" (Not Services) insofar as this Contract is concerned

Refer to Dwg. No. 2 for Water Service Abandonments and Transfers.

The locations and elevations of existing utilities are shown in accordance with available data. The Contractor shall expose these utilities, where required, to determine actual locations.

Other utilities may be making alterations to their existing systems in the vicinity of the Water Main construction shown on the plans. These utilities should be consulted for the latest information regarding the location of their facilities.

A minimum clearance of one foot vertically and three and one half feet horizontally shall be maintained between the Water Main and other utilities, unless otherwise shown on the plans or approved by the Engineer. If a conflict is indicated between the Water Main and any other utility, that utility should be consulted.

The Reference Numbers called for on the water plans refer to Detroit Metropolitan Water Services drawing numbers.

The location of Fire Hydrants, as shown, are approximate. D.F.D. will give exact location of Proposed Fire Hydrants prior to installation.

Final choice of Existing Fire Hydrants to be relocated will be subject to D.F.D. approval prior to relocation.

Elevation Datum is City of Detroit Datum.

See Structural Plans for details and location of bridge piers, bridge abutments, and retaining walls.

See Road Plans for location of proposed detours.

See Removal Plans for reconstruction, adjustment, removal, and abandonment of items other than Fire Hydrants.

Encasement Details are shown on Dwg. No. 10.

All Water Alteration Quantities are shown on this Drawing.

Valving for D.M.W.S. Sequence of Operations is shown on Dwg. No. 2

Elevations of the Proposed Water Mains shown on the drawings are Subgrade Elevations unless shown otherwise.

Existing and Proposed Surface Elevations shown on the Drawings are along the Center Line of the Proposed Water Mains.

PRESTRESSED CONCRETE PIPE NOTES

Prestressed Pipe for Water Mains shall be designed for a minimum earth cover of 10 feet based on ordinary bedding using a load factor of 1.5, unless otherwise specified or shown on the drawings.

Refer to the Water Main portion of the Supplemental Specifications for additional pipe design requirements.

Prestressed Conc. Cylinder and Embedded Cyl. Water Mains are listed in the Water System Pay Items as Prestressed Conc. Cylinder and Embedded Cyl. Pipe.

CONSTRUCTION NOTES

Encasements and Thrust Blocks shall be poured against undisturbed earth. Bottom 3" of Encasement may be poured separate from Encasement and used as a sub-footing.

All Encasements and Thrust Blocks shall terminate at the face of pipe bells.

Removal of abandoned Water Mains as required for clearance to construct the Proposed Water Mains is incidental to Water Main construction.

Sheeting and bracing, where required, shall be installed by the Contractor as incidental to Water Main construction.

Contractor shall construct all Concrete Thrust Blocks and Gate Wells.

Scheduling of the connections shall be governed by the "Sequence of Operations" and "Flushing and Chlorination" specifications which are included in the Water Main portion of the Proposal.

LEGEND

Proposed Water Main — under 24" — 24" and over
Existing Water Main — under 24" — 24" and over
Future Water Main — under 24" — 24" and over
Proposed Water Main Connection by Contractor
Water Mains to be abandoned
Proposed Gate Valve and Well
Existing Gate Valve and Well
Proposed Hydrant
Existing Hydrant
Existing Sewer or Drain — under 24" — 24" and over
Gas Main — G — G — G
Telephone or Telegraph Conduit or Underground Cable — T —
Electric Power Conduit or Underground Cable — E — E — and — P —
Petroleum Products Line
Steam Line
Trees — Size
Utility Pole — Owner
Boulevard Light
Police or Fire Alarm Box — P.B. — F.B.
Traffic Signal
Mail Box, Parking Meter, or small sign
Large Sign
Gas Stop or Drip
Catch Basin — Proposed — Existing
Sewer Manhole — Proposed — Existing
Pole Anchor
Elevation Control Monument — x B.M.
Existing Ditch
Section Line
Freeway Right of Way Line
Fence

WATER SYSTEM ALTERATION QUANTITIES

WATER SYSTEM PAY ITEMS	AS PER PLANS AMOUNT	AS CONSTRUCTED AMOUNT
24" C.I. Water Main (Trench Detail-12)	15 lin. ft.	
6" D.I. Water Main (Trench Detail-11)	120 lin. ft.	
6" D.I. Water Main (Trench Detail-12)	204 lin. ft.	
8" D.I. Water Main (Trench Detail-12)	1450 lin. ft.	
10" D.I. Water Main (Trench Detail-12)	6 lin. ft.	
12" D.I. Water Main (Trench Detail-12)	18 lin. ft.	
16" Prestressed Conc. Emb. Cyl. Pipe (Trench Detail-12)	6 lin. ft.	
24" Prestressed Conc. Emb. Cyl. Pipe (Trench Detail-12)	1163 lin. ft.	
24" Prestressed Conc. Emb. Cyl. Pipe (Trench Detail-14-12)	101 lin. ft.	
42" A.S.T.M. C-76 Cl. V Wall "B" Conc. Pipe Casing, Jacked in place	80 lin. ft.	
Special Tunnel for 24" Water Main	200 lin. ft.	
6" D.I. Water Main (In Tunnel)	80 lin. ft.	
24" Prestressed Conc. Emb. Cyl. Pipe (In Tunnel)	200 lin. ft.	
6" Gate Valves	1 each	
8" Gate Valves	6 each	
6" Gate Wells	1 each	
8" Gate Wells	7 each	
16" Gate Wells	1 each	
8" Flanged Gate Valves	1 each	
16" Flanged Gate Valves	1 each	
6" Blow-off Wells	1 each	
6" Fire Hydrants	(A) 12 each	
6" Gate Valves & Boxes	(A) 12 each	
8" Gate Valves & Boxes	1 each	
6" Permanent Blow-offs	1 each	
Contractors Connections (16" or less Dia.)	11 each	
Contractors Connections (24" Dia.)	3 each	
Abandon Gate Wells	2 each	
Reconstruct Gate Wells	5 each	
Adjust Gate Well Manhole Covers	6 each	
Air Valve Wells	2 each	
Adjust Gate Valve Boxes	(A) 4 each	
Concrete Grade "A" (For Water Main Structures)	68 cu yds.	
Steel Reinforcement (For Water Main Structures)	2823 lbs.	

T4000(3)

21-M

DETROIT METRO WATER DEPARTMENT
WATER SYSTEM

CORRECT J.H.W. APPROVED H.A. APPROVED H.E. Wenter
CHECKED J.H.W. ASSISTANT CHIEF ENGINEER
DATE 4-27-72 JOB NO. D-982-1 DRAWING NO. 3 OF 14

EGB-1

COORD	DESCRIPTION	DR'N	CK'D	AP'VD	DATE
(A)	Rev. Quantities	DKL			7-17-72

REVISIONS LOCATED BY COORDINATES ON SHEET

REFERENCE DRAWINGS

DESIGNED BY
DRAWN BY G.F.L. 4-72
TRACED BY
CHECKED BY

APPROVED:
CITY ENGINEER

CITY OF DETROIT
DEPARTMENT OF PUBLIC WORKS
CITY ENGINEERS OFFICE

EAST GRAND BOULEVARD OVER GRAND TRUNK RAILROAD GRADE SEPARATION — WATER MAIN ALTERATIONS

GENERAL NOTES AND QUANTITIES

COUNTY PROJECT
COUNTY JOB
ISSUE NO.
DATE
SHEET NO. 4

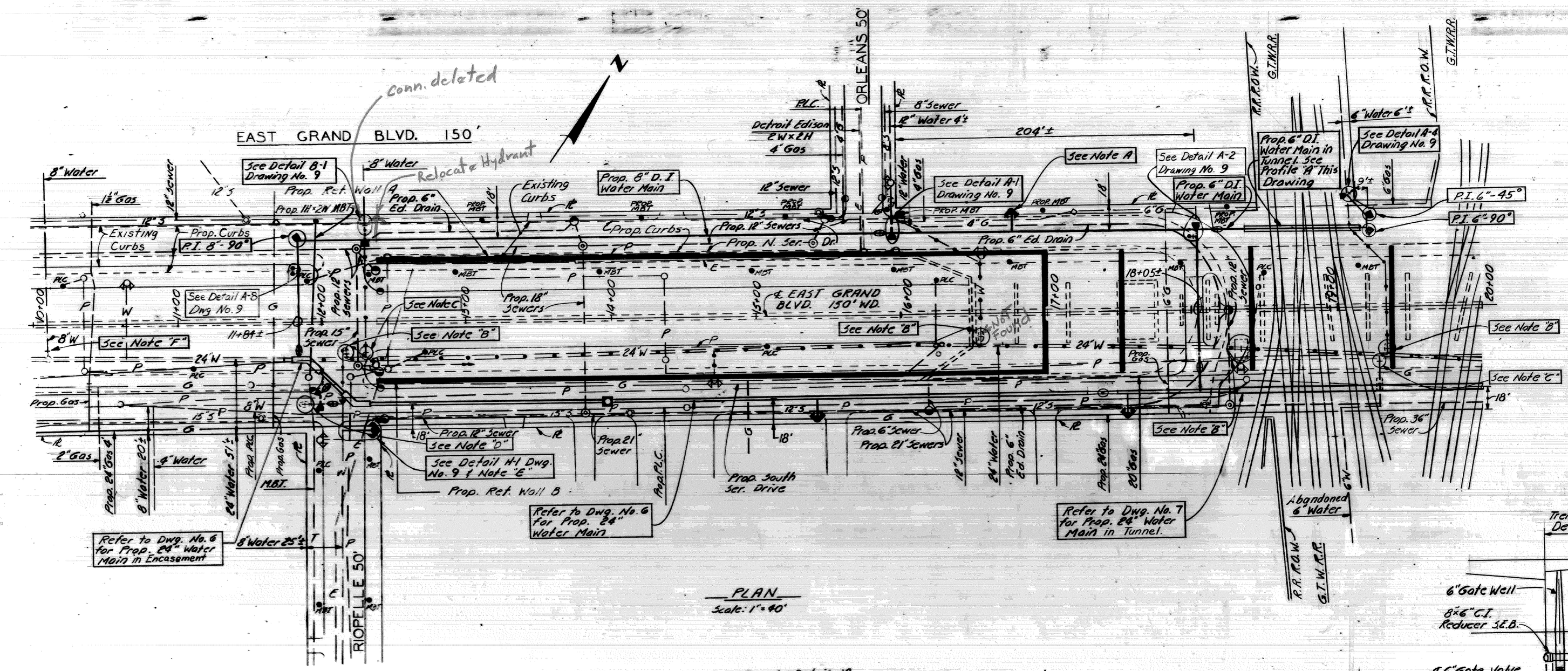

PLAN
Scale: 1" = 40'

NOTE:-
All Water Alteration Quantities are shown on Drawing No. 3

Note "A" Contractor shall install 6" Fire Hydrant at 3' minimum from face of curb in 16'± of Trench Detail 12.

Note "B" Contractor shall abandon Existing Gate Well.

Note "C" Contractor shall abandon Existing Gate Box (incidental.)

Note "D" Contractor shall adjust Existing Gate Well Cover.

Note "E" Contractor shall install 6" Fire Hydrant at 3' Min. from face of curb in 22'± of Trench Detail 12. See Detail H-1, Drawing No. 9.

Note "F" Contractor shall adjust existing Gate Valve Box.

REFERENCE DRAWINGS

General Plan	Dwg. No. 1
Water Services	Dwg. No. 2
General Notes	Dwg. No. 3
Quantities	Dwg. No. 3
Connection Details	Dwg. No. 9
Tunnel Details	Dwg. No. 11
Miscellaneous Details	Dwg. No. 14

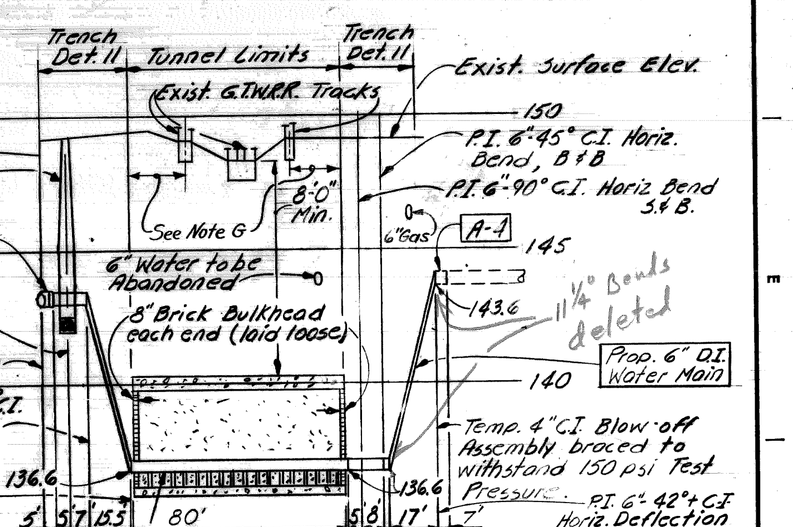

PROFILE "A"
Scale: Horiz. 1" = 40'
Vert. 1" = 4'

Note "G" This dimension, 15 Min., is governed by the following criterion: 4'-3" (one-half of railroad tie) plus the virtical distance from top of railroad tie to bottom outside of Water Main Tunnel (1 on 1 slope)

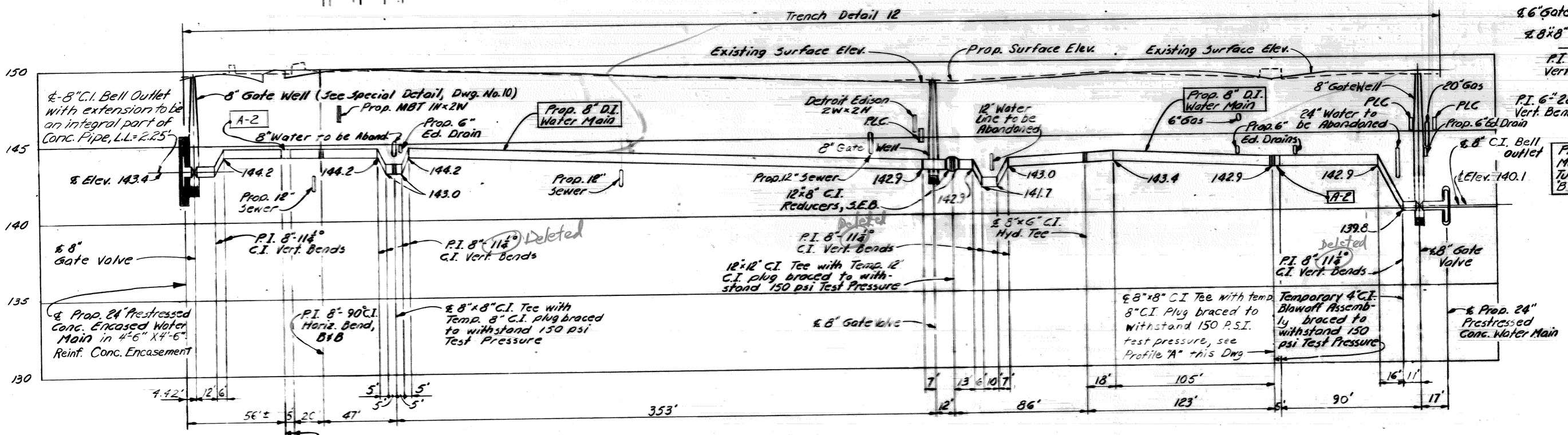

PROFILE
Scale: Horiz. - 1" = 40'
Vert. - 1" = 4'

As Built Rev. DKC 9-9-74

T4000(3)

21-M

DETROIT METRO WATER DEPARTMENT
WATER SYSTEM

CORRECT J. H. W. APPROVED R. F. Wendel ASSISTANT CHIEF ENGINEER
CHECKED J. H. W. DATE 04-27-72 JOB NO. D-982-1 DRAWING NO. 4 OF 14

EGB-1

COORD	DESCRIPTION	DR'N	CK'D	APV'D	DATE

REVISIONS LOCATED BY COORDINATES ON SHEET

REFERENCE DRAWINGS

DESIGNED BY	B. Comly
DRAWN BY	A.G. I
TRACED BY	A.G. GFL 4-72
CHECKED BY	B. Comly

APPROVED:
CITY ENGINEER

CITY OF DETROIT
DEPARTMENT OF PUBLIC WORKS
CITY ENGINEERS OFFICE

EAST GRAND BOULEVARD OVER GRAND TRUNK RAILROAD
GRADE SEPARATION – WATER MAIN ALTERATIONS

8" WATER MAIN IN NORTH SERVICE ROAD
FROM RIOPELLE TO G.T.W.R.R.

COUNTY PROJECT | COUNTY JOB | ISSUE NO. | DATE | SHEET NO. 5

Notes:

All Water Alteration Quantities are shown on Dwg. No. 3.

Note "A"
Contractor shall install 6" Fire Hydrant at 3' min. from face of curb in 21'± of Trench Detail-12.

Note "B"
Contractor shall install 6" Fire Hydrant at 3' min. from face of curb in 6'± of Trench Detail-12.

Note "C"
Contractor shall abandon Existing Gate Box. (Incidental)

Note "D"
Contractor shall adjust existing Gate Well Covers to suit proposed grade.

Note "E"
Contractor shall install 6" Fire Hydrant at 6' min. from face of curb in 30'± of Trench Det. 12

REFERENCE DRAWINGS

General Plan	Dwg.	No. 1
Water Services	Dwg.	No. 2
General Notes	Dwg.	No. 3
Quantities	Dwg.	No. 3
Connection Details	Dwg.	No. 9
Miscellaneous Details	Dwg.	No. 14
Vertical Thrust Block Details	Dwg.	No. 11

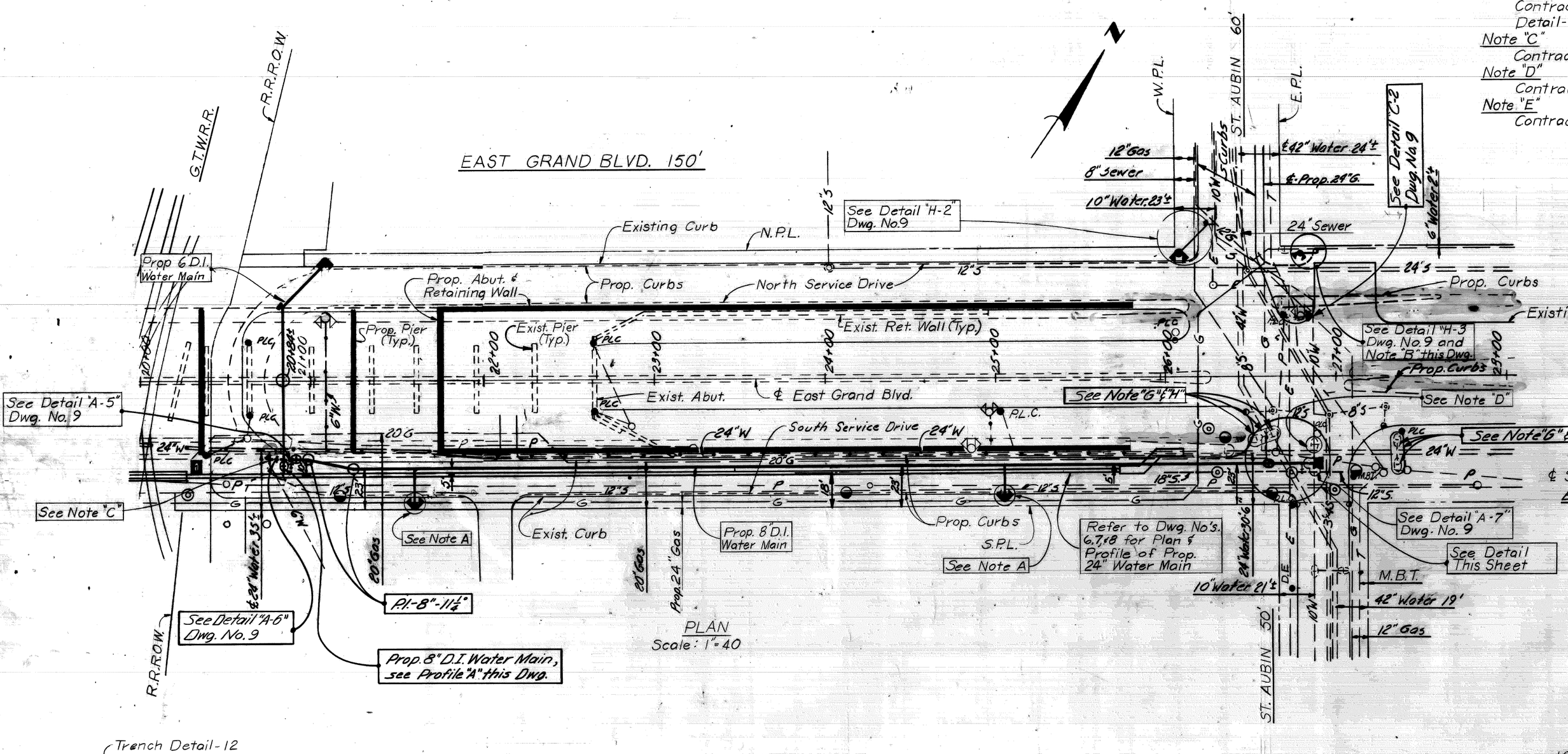

PLAN
Scale: 1" = 40'

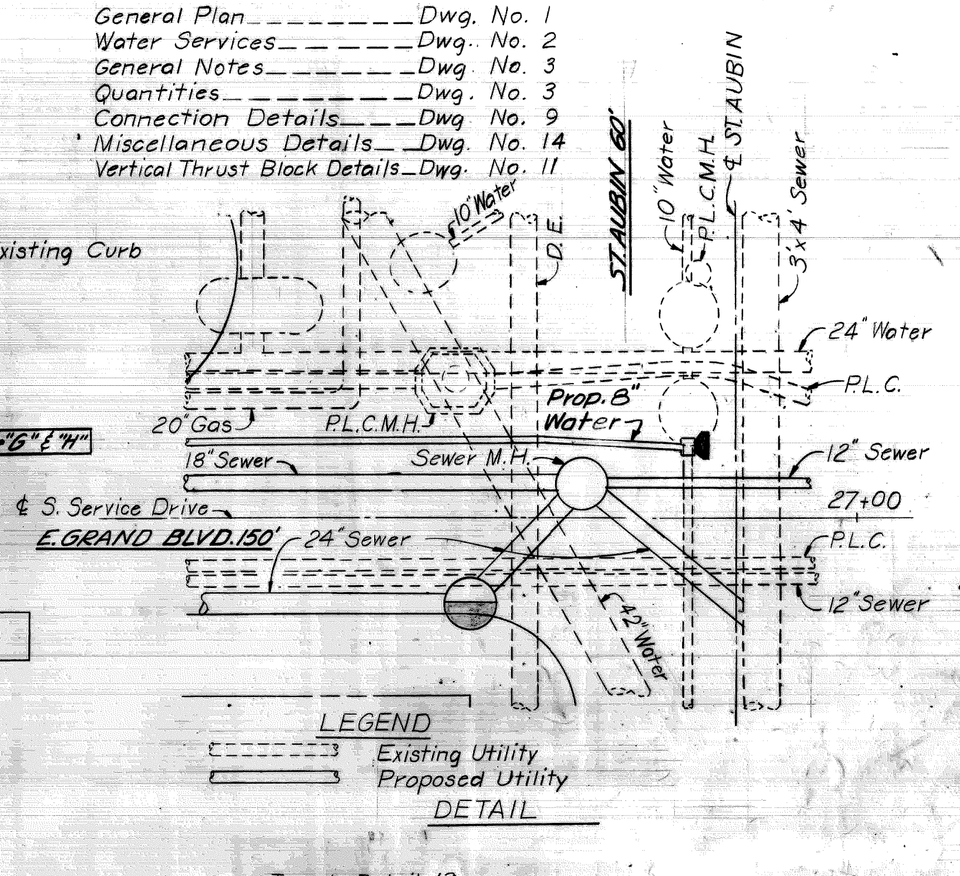

DETAIL

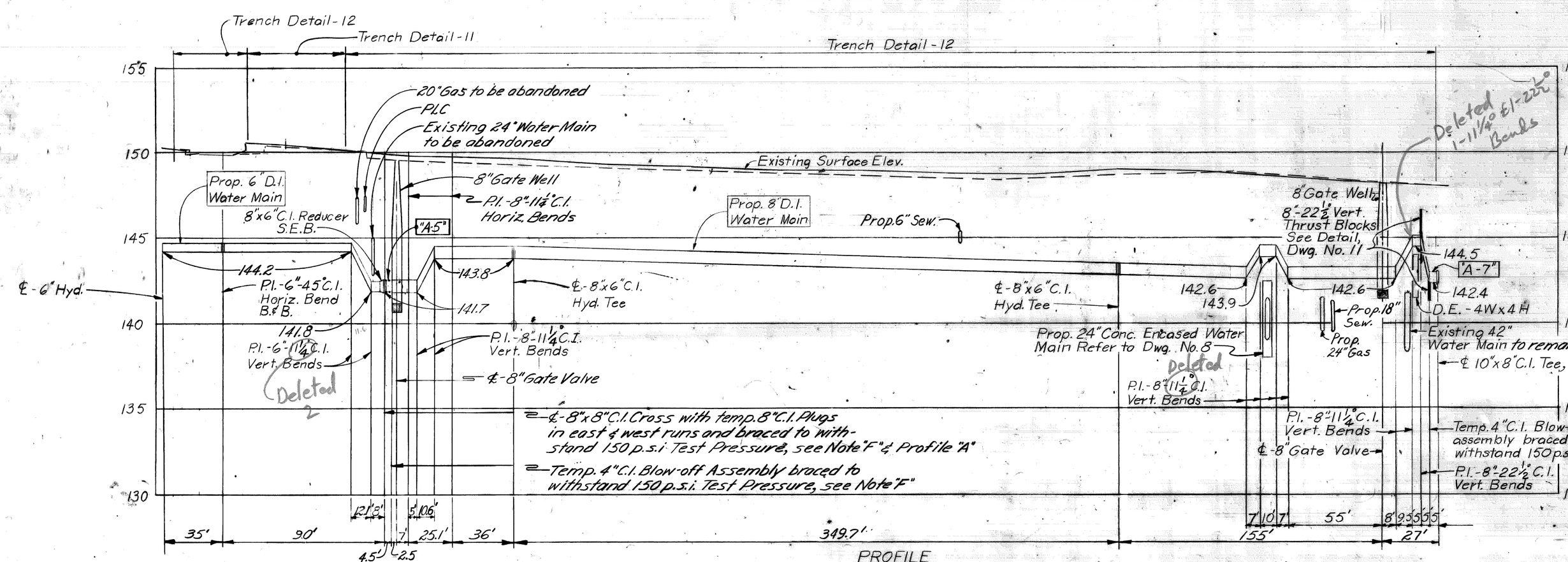

PROFILE
Scale: Horiz. 1" = 40'
Vert. 1" = 4'

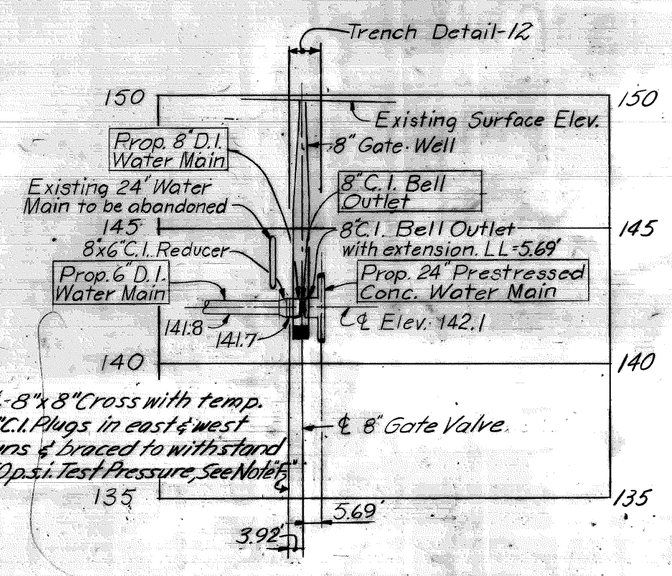

PROFILE "A"
Scale: Horiz. 1" = 40'
Vert. 1" = 4'

Note "F"
℄-Prop. Water Main shall meet ℄-Existing Water Main

Note "G"
Contractor shall re-construct existing Gate Well to suit the Prop. Grade

Note "H"
Contractor shall adjust existing Gate Valve Box.

As Built Rev: DKC 4-9-74

T4000(3)

21-M

DETROIT METRO WATER DEPARTMENT
WATER SYSTEM

EGB-1

CORRECT / CHECKED / DATE 4-27-72	APPROVED	APPROVED ASSISTANT CHIEF ENGINEER
	JOB NO. D-982-1	DRAWING NO. 5 OF 14

COORD	DESCRIPTION	DR'N	CK'D	APV'D	DATE	REFERENCE DRAWINGS	
REVISIONS LOCATED BY COORDINATES ON SHEET						DESIGNED BY	R. Bunce
						DRAWN BY	L.G.
						TRACED BY	CFL 4-72
						CHECKED BY	

APPROVED:

CITY ENGINEER

CITY OF DETROIT
DEPARTMENT OF PUBLIC WORKS
CITY ENGINEERS OFFICE

EAST GRAND BOULEVARD OVER GRAND TRUNK RAILROAD GRADE SEPARATION – WATER MAIN ALTERATIONS

6" & 8" WATER MAINS FROM G.T.W.R.R. TO ST. AUBIN

COUNTY PROJECT | COUNTY JOB | ISSUE NO. | DATE | SHEET NO. 6

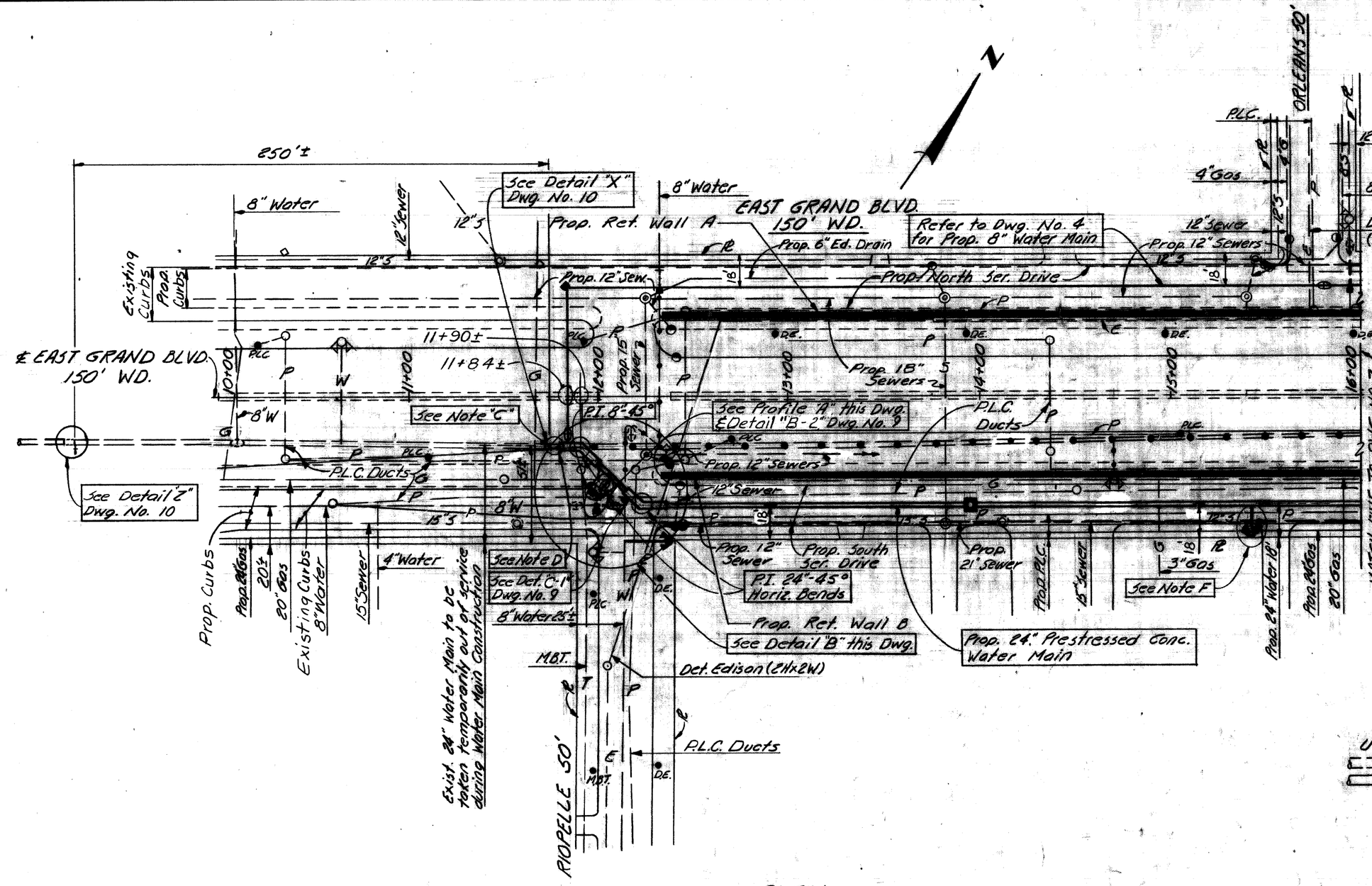

PLAN
Scale: 1" = 40'

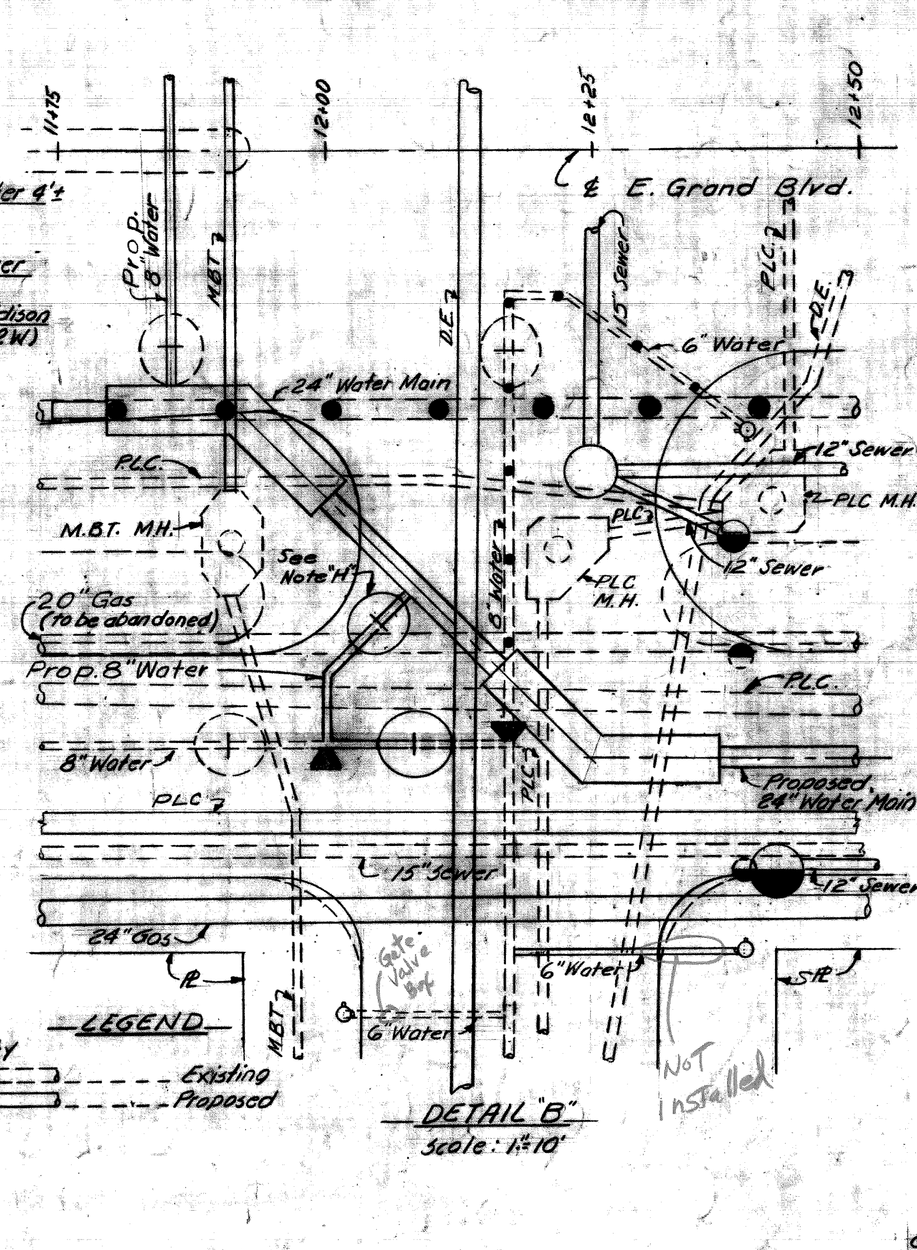

DETAIL "B"
Scale: 1" = 10'

LEGEND
Utility
Existing
Proposed

NOTE:
All water alteration quantities are shown on Dwg. No. 3.

Note "A"
℄ Prop. Water Main shall meet ℄ Existing Water Main.

Note "B"
Contractor shall expose Exist. 24" Water Main at point of connection and verify the exist. location prior to fabrication of pipe.

Note "C"
Contractor shall provide & install Temp. 24" cap to prevent water and/or foreign material from entering the exist. 24" Water Main.

Note "D"
Temp. 24" C.I. plug braced to withstand 150 psi. Test Pressure.

Note "E"
Trench Detail 14 also applies at Water Main encasement.

Note "F"
Contractor shall install 6" Fire Hydrant @ 5' minimum from face of curb in 16'± of Trench Detail 12.

Note "G"
Temp. 24" Conc. plug or cap braced to withstand 50 psi. Test Pressure.

Note "H"
Gate Well to be constructed after 20" Gas Line is abandoned.

REFERENCE DRAWINGS

General Plan	Dwg. No. 1
Water Services	Dwg. No. 2
General Notes	Dwg. No. 3
Quantities	Dwg. No. 3
Connection Details	Dwg. No. 9
Miscellaneous Details	Dwg. No. 14
Encasement Details	Dwg. No. 10
Pipe Jack Details	Dwg. No. 10
Air Valve Well Details	Dwg. No. 12

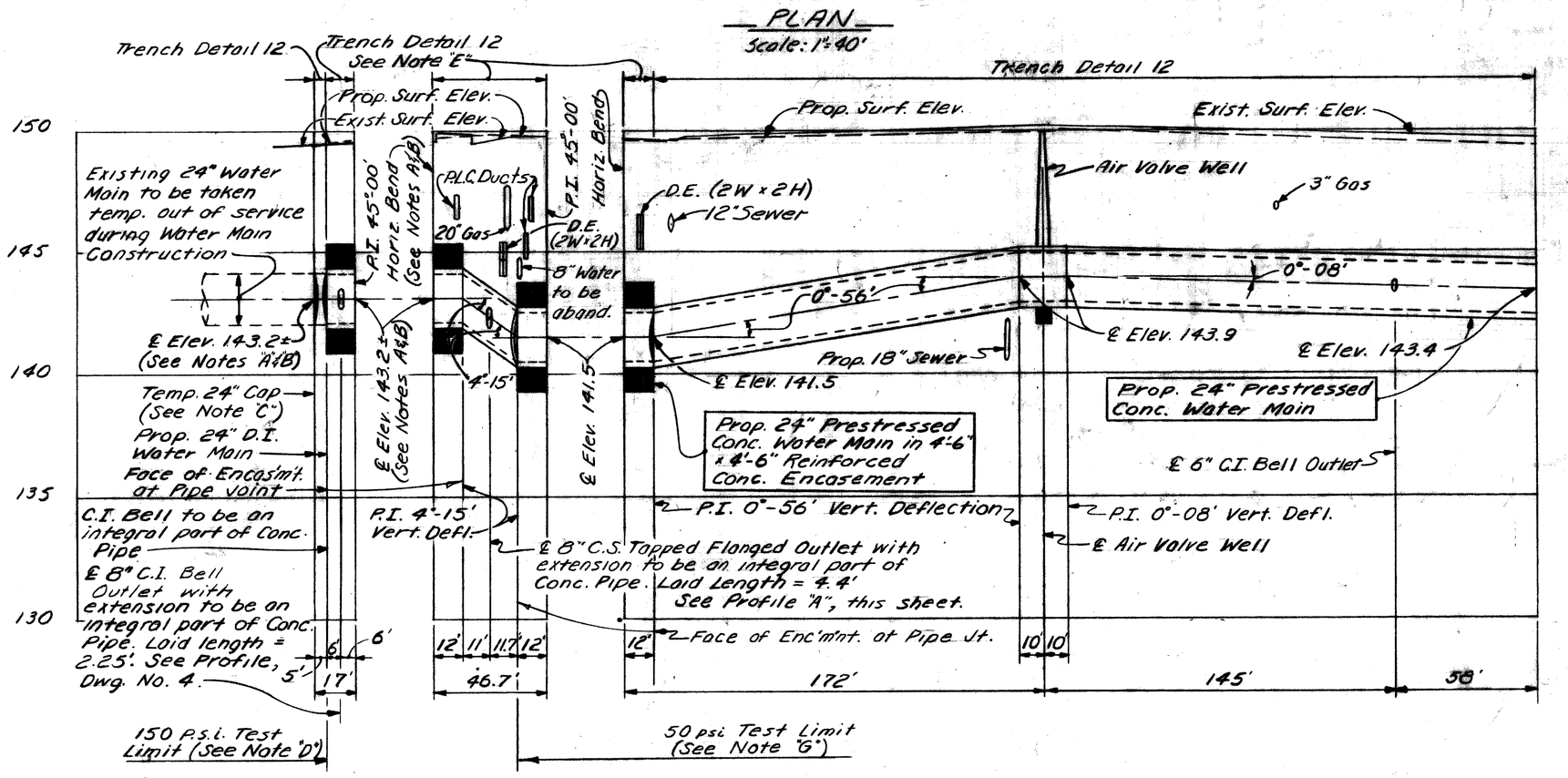

PROFILE
Scale: Hor. 1" = 40'
Vert. 1" = 4'

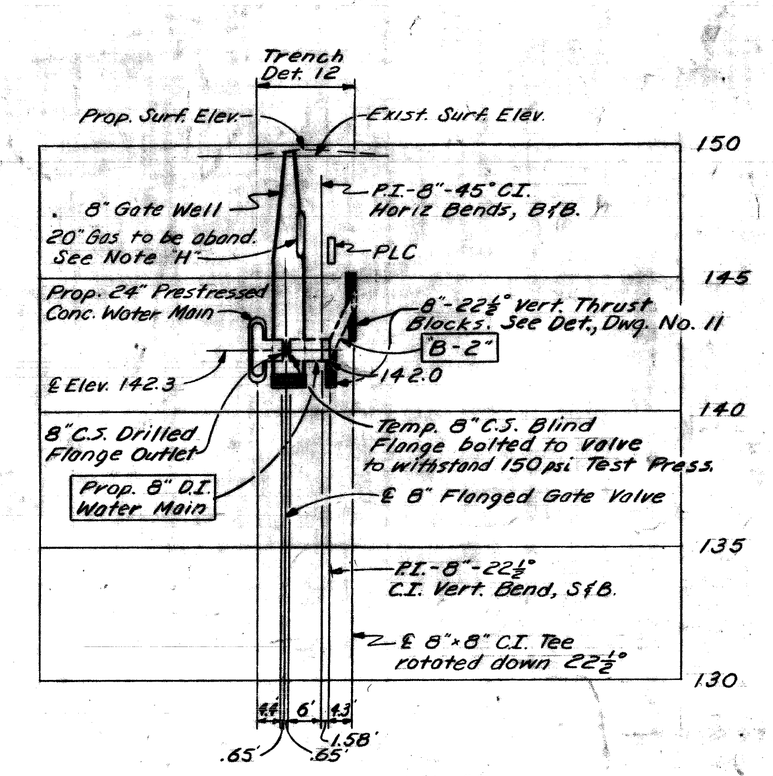

PROFILE "A"
Scale: Hor. 1" = 20'
Vert. 1" = 4'

As Built Rev. DKC 9-9-74

T4000(3)

21-M

EGB-1

DETROIT METRO WATER DEPARTMENT
WATER SYSTEM

CORRECT J.H.W. ON CORRECT H.H.W. DATE 4-27-72 | APPROVED | JOB NO. D-982-1 | APPROVED N.E. Wilson ASSISTANT WATER COMMISSIONER | DRAWING NO. 6 OF 14

COORD	DESCRIPTION	DR'N	CK'D	AP'VD	DATE

REVISIONS LOCATED BY COORDINATES ON SHEET

REFERENCE DRAWINGS

DESIGNED BY	B. Comly
DRAWN BY	A.G./R. Bunce
TRACED BY	A.G.
CHECKED BY	

APPROVED:
CITY ENGINEER

CITY OF DETROIT
DEPARTMENT OF PUBLIC WORKS
CITY ENGINEERS OFFICE

EAST GRAND BOULEVARD OVER GRAND TRUNK RAILROAD GRADE SEPARATION—WATER MAIN ALTERATIONS

24" WATER MAIN IN SOUTH SER. DR. FROM RIOPELLE TO APPROX. 360' E. OF E. ℄ RIOPELLE

COUNTY PROJECT | COUNTY JOB | ISSUE NO. | DATE | SHEET NO. 7

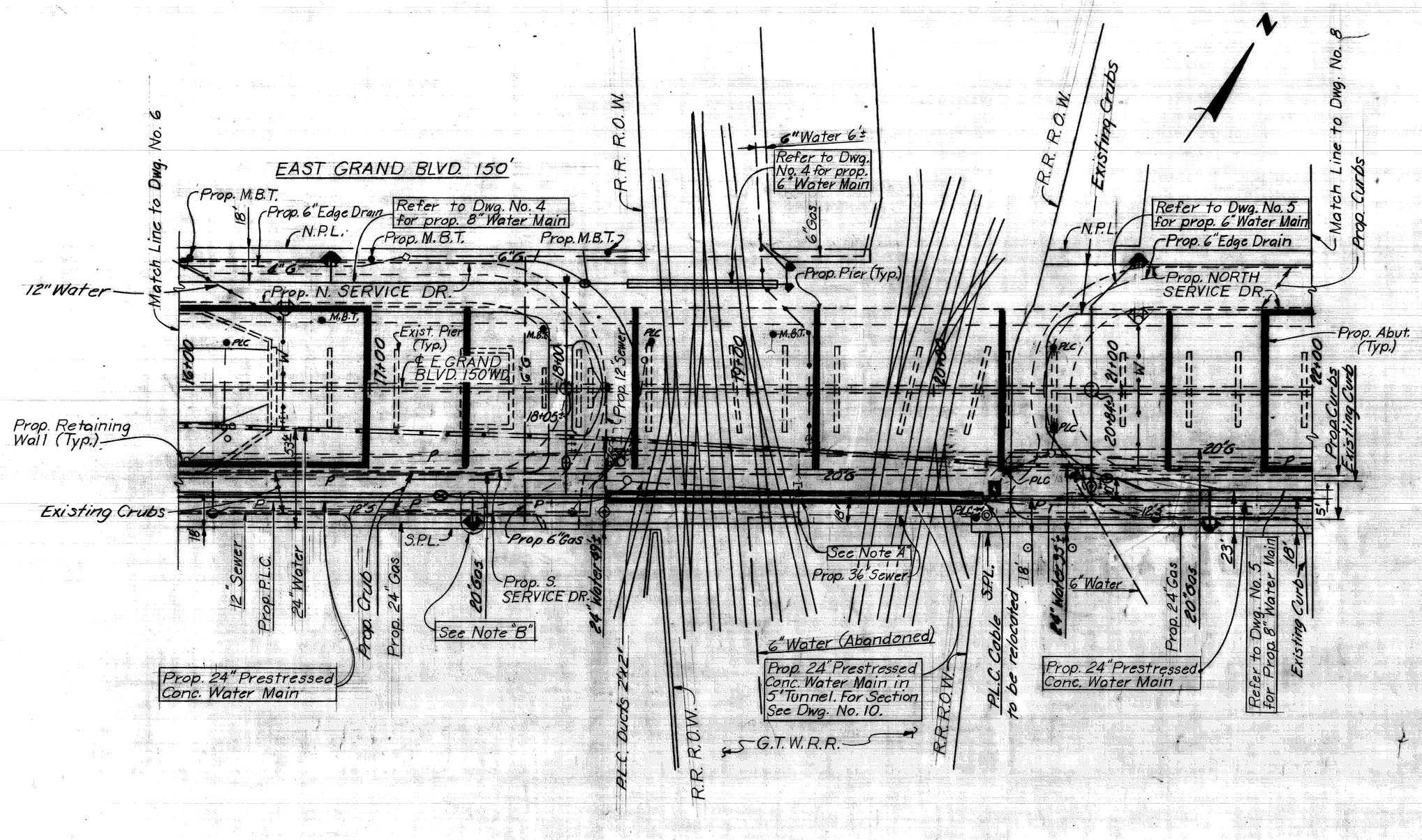

PLAN
Scale: 1" = 40'

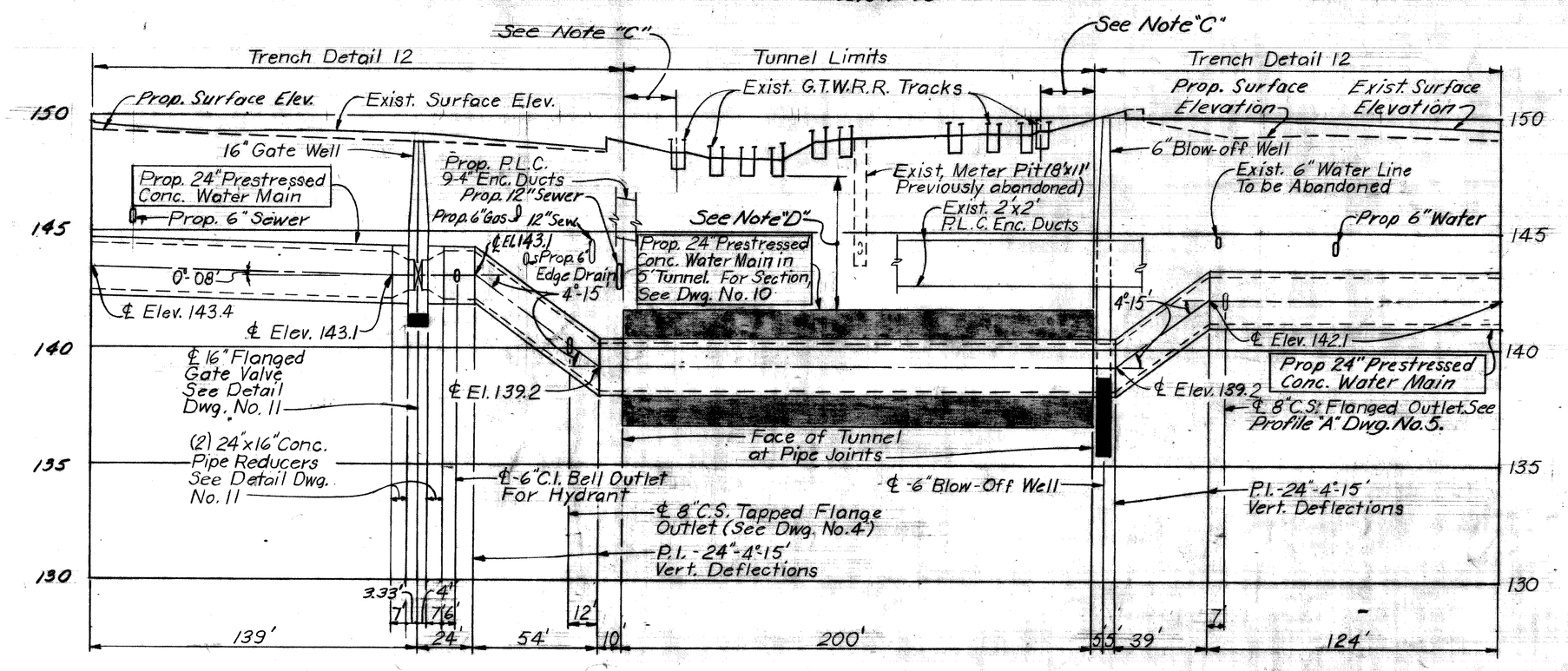

PROFILE
Scale: Hor. 1" = 40'
Vert. 1" = 4'

Note:
All water alteration quantities are shown on Dwg. No. 3.

Note "A"
This 6" Water Line and meter pit have been previously abandoned.

Note "B"
Contractor shall install 6" Fire Hydrant at 3' minimum from face of curb in 16'± of Trench Detail 12.

Note "C"
This dimension, 15' Min., is governed by the following criterion: 4'-3" (One-half of railroad tie) plus the vertical distance from top of railroad tie to bottom outside of Water Main Tunnel (1 on 1 slope).

Note "D"
The minimum for this dimension (from bottom of railroad tie to top outside of Water Main Tunnel) is 4'-6".

REFERENCE DRAWINGS

General Plan	Dwg. No. 1
Water Services	Dwg. No. 2
General Notes	Dwg. No. 3
Quantities	Dwg. No. 3
Connection Details	Dwg. No. 9
Miscellaneous Details	Dwg. No. 14
Tunnel Section & Details	Dwg. No. 10
16" Flanged Gate Well Details	Dwg. No. 11
Concrete Pipe Reducer Details	Dwg. No. 11

T4000(3)

21-M

DETROIT METRO WATER DEPARTMENT
WATER SYSTEM

EGB-1

CO-ORDINATE		APPROVED	APPROVED ASSISTANT CHIEF ENGINEER
DESIGNED			
DATE 9-27-72	JOB NO. D-982-1	DRAWING NO. 7 OF 14	

COORD	DESCRIPTION	DR'N	CK'D	APV'D	DATE

REVISIONS LOCATED BY COORDINATES ON SHEET

REFERENCE DRAWINGS

DESIGNED BY	B. Comly
DRAWN BY	A.G./L.G.
TRACED BY	A.G./L.G.
CHECKED BY	B. Comly

APPROVED:

CITY ENGINEER

CITY OF DETROIT
DEPARTMENT OF PUBLIC WORKS
CITY ENGINEERS OFFICE

EAST GRAND BOULEVARD OVER GRAND TRUNK RAILROAD GRADE SEPARATION - WATER MAIN ALTERATIONS

24" WATER MAIN IN SOUTH SER. DR. FROM APPROX. 360' E. OF E. R. RIOPELLE TO APPROX. 465' W. OF W. R. ST. AUBIN

COUNTY PROJECT | COUNTY JOB

ISSUE NO. | DATE

SHEET NO. 8

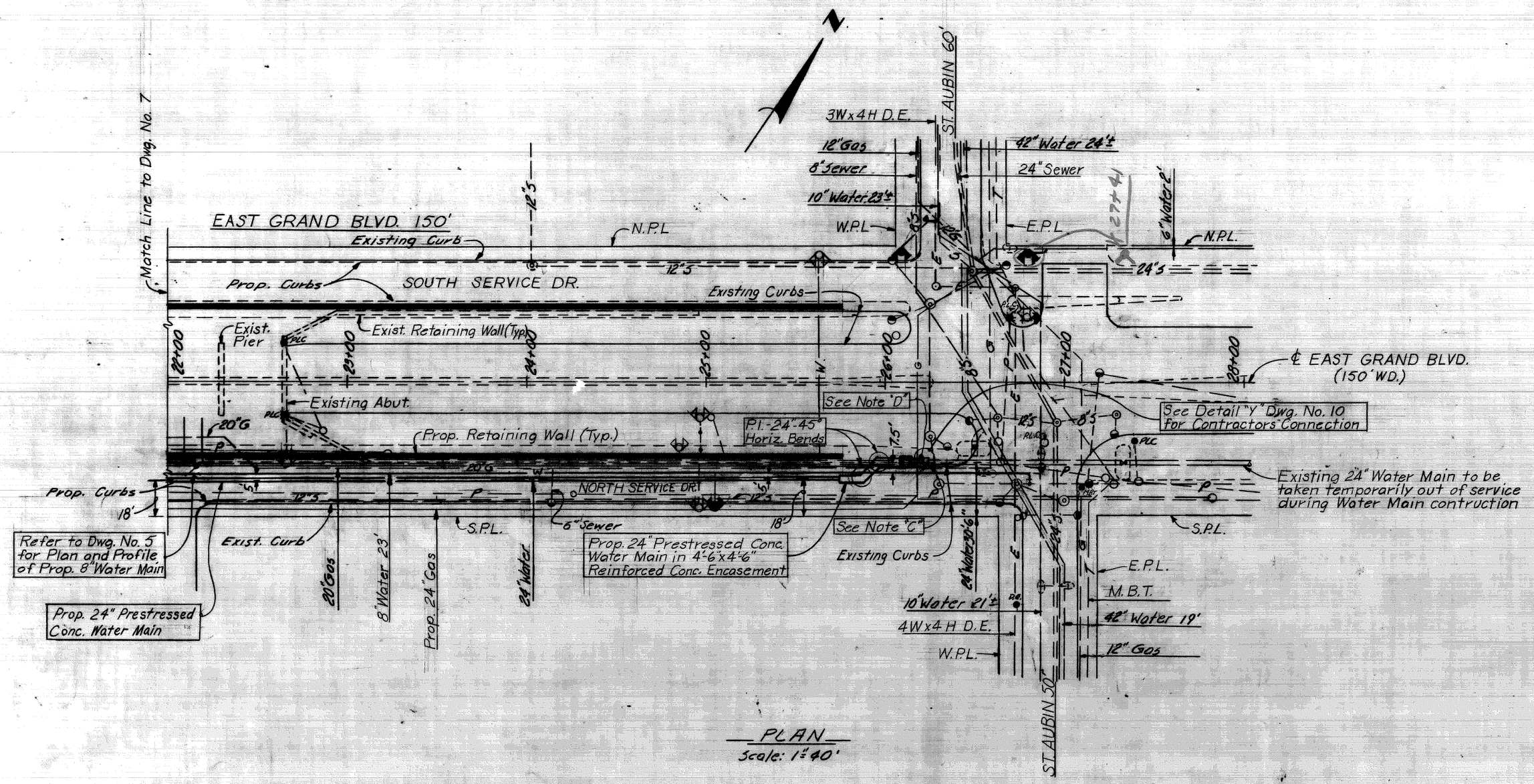

PLAN
Scale: 1" = 40'

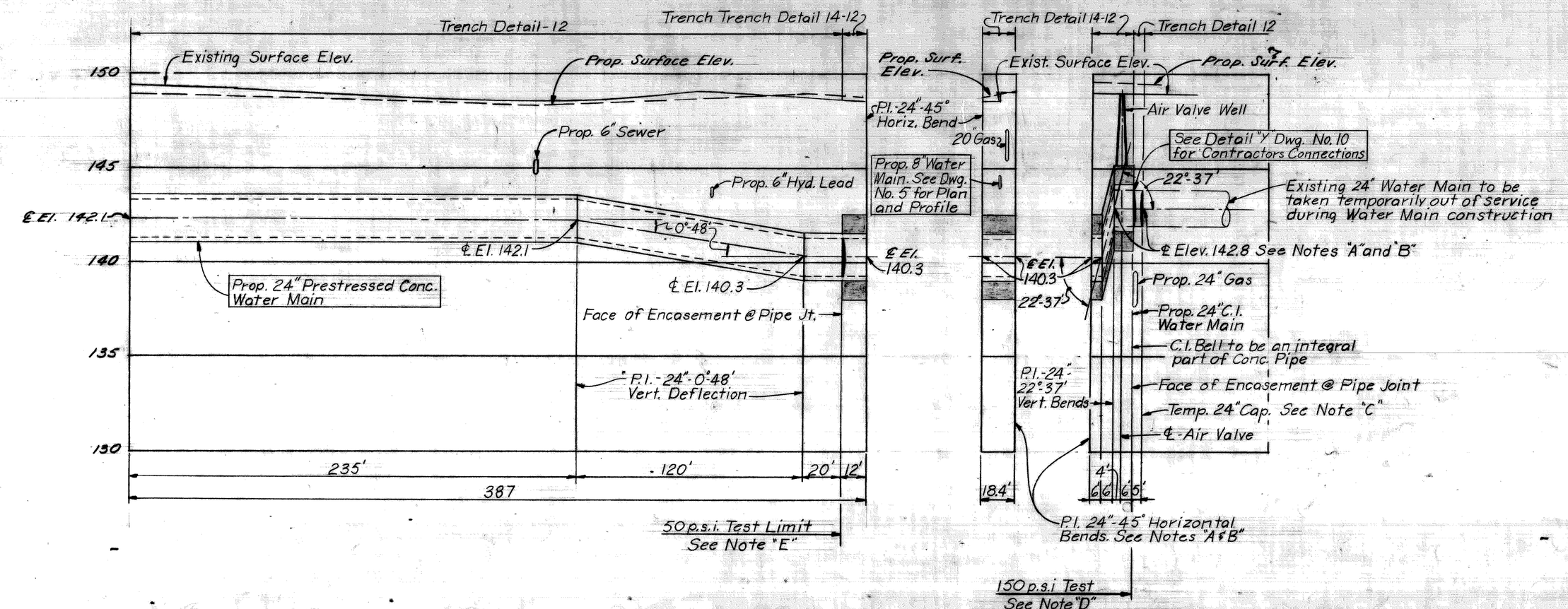

PROFILE
Scale: Hor. 1" = 40'
Vert. 1" = 4'

Notes:

All water alteration quantities are shown on Dwg. No. 3.

Note "A"
℄-Prop. Water Main shall meet ℄-Existing Water Main.

Note "B"
Contractor shall expose Existing 24" Water Main at point of connection and verify the existing location prior to fabrication of Pipe

Note "C"
Contractor shall provide and install Temp. 24" Cap to prevent water and/or foreign material from entering the existing 24" Water Main.

Note "D"
Temp. 24" C.I. Plug braced to withstand 150 p.s.i. Test Pressure.

Note "E"
Temp. 24" Conc. Plug or Cap braced to withstand 50 p.s.i. Test Pressure

REFERENCE DRAWINGS

	Dwg. No.
General Plan	1
Water Services	2
General Notes	3
Quantities	3
Connection Details	9
Miscellaneous Details	14
Pipe Jack Details	10
Encasement Details	10

As Built Rev.: DKC 9-9-74

T4000(3)

21-M

DETROIT METRO WATER DEPARTMENT
WATER SYSTEM

EGB-1

CORRECT J.H. Hill	APPROVED [illegible]	APPROVED A. R. Wenner ASSISTANT CHIEF ENGINEER
CHECKED J.H. Hill		
DATE 4-27-72	JOB NO. D-982-1	DRAWING NO. 8 OF 14

COOR'D	DESCRIPTION	DR'N	CK'D	APV'D	DATE
REVISIONS LOCATED BY COORDINATES ON SHEET					

REFERENCE DRAWINGS

DESIGNED BY	R. Bunce
DRAWN BY	L.G. / A.G.
TRACED BY	A.G.
CHECKED BY	

APPROVED:

CITY ENGINEER

CITY OF DETROIT
DEPARTMENT OF PUBLIC WORKS
CITY ENGINEERS OFFICE

EAST GRAND BOULEVARD OVER GRAND TRUNK RAILROAD
GRADE SEPARATION-WATER MAIN ALTERATIONS

24" WATER MAIN SOUTH SER. DR. FROM APPROX.
465' W. OF W. ℄ ST. AUBIN TO ST. AUBIN

COUNTY PROJECT | COUNTY JOB

ISSUE NO. | DATE

SHEET NO. 9

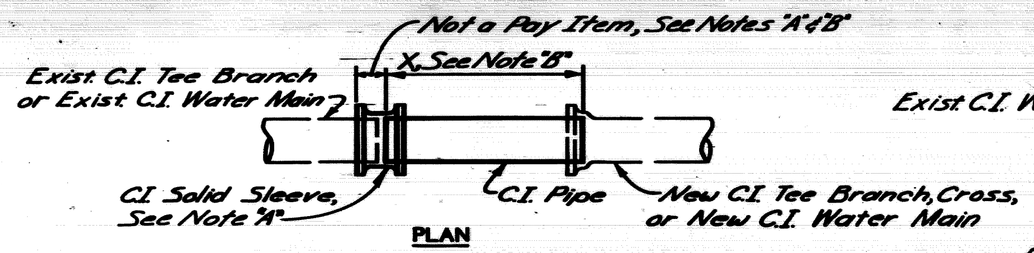

PLAN

DETAILS A-1 THRU A-8

(No Scale)

SCHEDULE FOR DETAIL "A"

DETAIL NO.	FROM DWG. NO.	NEW WATER MAIN SIZE	NEW TEE SIZE	SIZE OF C.I. PIPE	X	TRENCH DETAIL
A-1	4	—	12"x12"	12"	10'	12
A-2	4	—	8"x8"	8"	12'	12
A-4③	4	6"	—	6"	7'	12
A-5	5	—	8"x8"	8"	6'	12
A-6④	5	6"	—	6	11'	12
A-7⑤	5	~~10"~~ 8"	10"x8	~~10"~~ 8"	~~5'~~ 5'	12
A-8	4	—	8"x8"	8"	5'	12

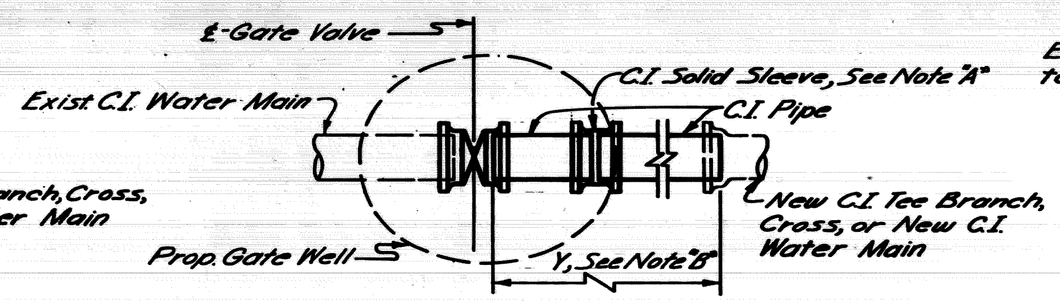

PLAN

DETAILS B-1 THRU B-2

(No Scale)

SCHEDULE FOR DETAIL "B"

DETAIL NO.	FROM DWG. NO.	NEW WATER MAIN SIZE	NEW TEE SIZE	SIZE OF C.I. PIPE	SIZE OF GATE VALVE	Y	TRENCH DETAIL
B-1	4	—	8"x8"	8"	8"	12'	12
B-2⑦	6	—	8"x8"	8"	8"	21'	12

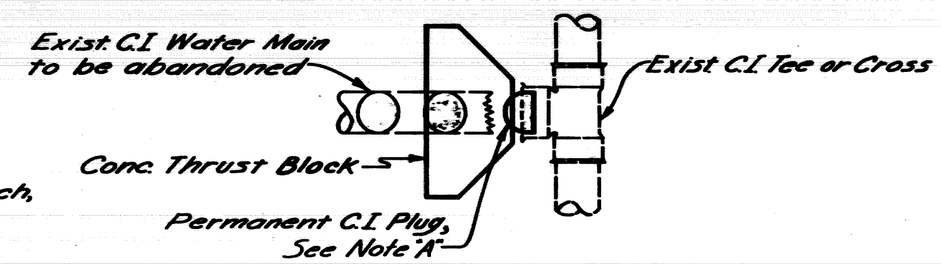

PLAN

DETAILS C-1 THRU C-2

(No Scale)

SCHEDULE FOR DETAIL "C"

DETAIL NO.	FROM DWG. NO.	PORTION OF TEE OR CROSS TO BE PLUGGED	SIZE OF TEE OR CROSS	PLUG SIZE	TRENCH DETAIL
C-1	4	North Run	—	8"	12
C-2	5	West Branch	10"x6" Hyd. Tee	6"	12

NOTES FOR CONTRACTOR'S CONNECTIONS

Contractor's Connections are shown by solid lines. Adjacent contractors work and/or existing Water Mains are indicated by dashed lines. (See Details, this sheet).

Contractor shall cut/cap or plug existing Water Mains to remain in service where required in accordance with supplemental specifications.

4" C.I. Blow-off Assemblies, C.I. plugs and caps to be installed and/or removed by Contractor have not been shown.

Contractor shall install and later remove all temporary C.I. Plugs, Tees and Blowoff assemblies.

Contractor shall furnish and install C.I. Pipe and Fittings necessary to complete the connections shown.

Contractor shall construct all Concrete Thrust Blocks and Gate Wells.

Contractor shall install all Temporary bracing for Water Main work.

It is not normally anticipated that bends requiring Thrust Blocks will be required for Connections unless otherwise shown.

Note "A"
Plugs and caps, temporary blow-offs, air valves, corporation stops, pipe jacks, solid sleeves, jointing material, bracing, and blocking are incidental to water main construction and will not be paid for separately.

Note "B"
Limits shown for dimensions "X" and "Y" shall be used to measure laid length of pipe.

ITEMS INCLUDED IN CONNECTIONS

① Rotate Tee down 22½°.

③ 1-42°± C.I. Horizontal Deflection rotate to suit.
④ 1-90° C.I. Horizontal Deflection, adjust to suit.
⑤ 1-10"x8" C.I. Tee.
⑥ 1-45° C.I. Horizontal Bend.
⑦ 1-22½° C.I. Vert. Bend.

SCHEDULE OF HYDRANT INSTALLATION ON EXISTING WATER MAINS
DETAIL H-1 THRU H-3

DETAIL NO.	FROM DWG. NO.	EXIST. OR NEW WATER MAIN SIZE	SIZE OF VALVE Ⓐ	LENGTH OF C.I. WATER MAIN	FIRE HYDRANT	TRENCH DETAIL
H-1	4	6"	6" Gate Valve	10'	6"	12
H-2②	5	10"	6" Gate Valve	32'	6"	12
H-3	5	10"	6" Gate Valve	6'	6"	12

Ⓐ Gate Box shall be furnished & installed for each valve.

T4000(3)

21-M

DETROIT METRO WATER DEPARTMENT
WATER SYSTEM

CORRECT J. J. [illegible] APPROVED [illegible] APPROVED H. R. Warner Ed
CHECKED J. J. [illegible] ASSISTANT CHIEF ENGINEER
DATE 8-27-72 JOB NO. D-982-1 DRAWING NO. 9 OF 14

EGB-1

COORD'D	DESCRIPTION	DR'N	CK'D	AP'VD	DATE

REVISIONS LOCATED BY COORDINATES ON SHEET

REFERENCE DRAWINGS

DESIGNED BY
DRAWN BY A.G.
TRACED BY
CHECKED BY

APPROVED:

CITY ENGINEER

CITY OF DETROIT
DEPARTMENT OF PUBLIC WORKS
CITY ENGINEERS OFFICE

EAST GRAND BOULEVARD OVER GRAND TRUNK RAILROAD
GRADE SEPARATION – WATER MAIN ALTERATIONS

CONTRACTOR'S CONNECTION DETAILS

COUNTY PROJECT | COUNTY JOB

ISSUE NO. | DATE

SHEET NO. 10

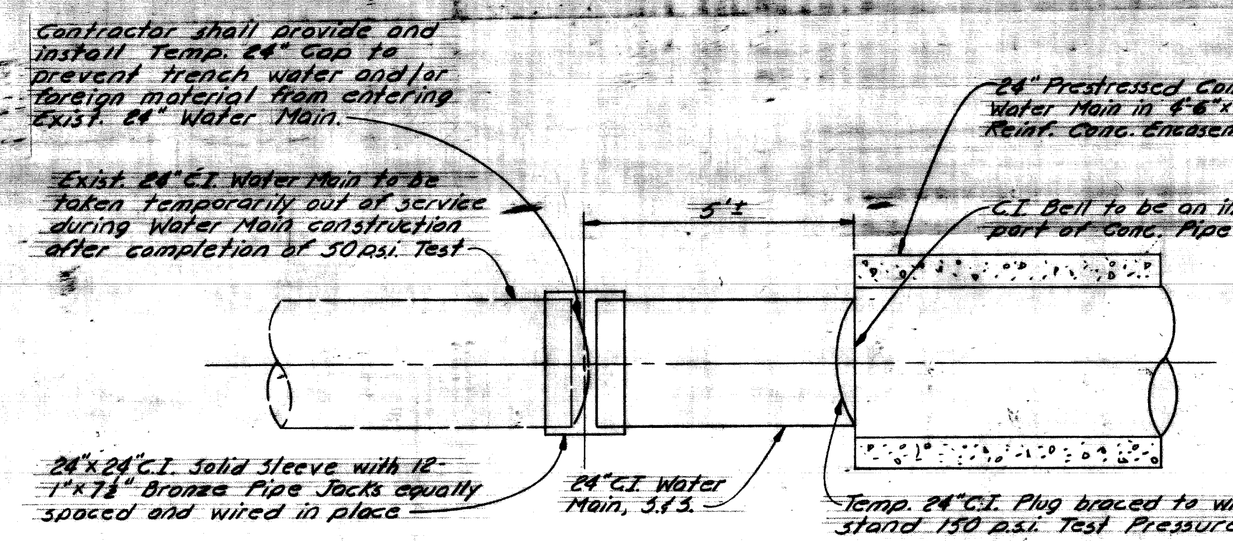

PLAN

DETAIL "X" & "Y" FROM DWGS. NO. 6 & 8
CONNECTION OF PROP. 24" PRESTRESSED CONC. WATER MAIN TO EXIST. 24" C.I. WATER MAIN IN EAST GRAND BLVD. NEAR RIOPELLE & ST. AUBIN

No Scale

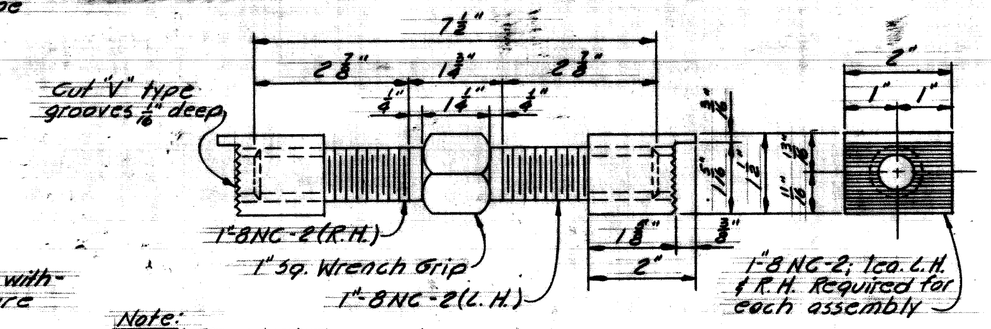

Note:
All 1" Pipe Jacks to be Bronze A.S.T.M. Designation B-21-52 Alloy "A" Hard.

DETAIL OF 1"x7½" PIPE JACK

Scale: Half Size 36 Reqd.

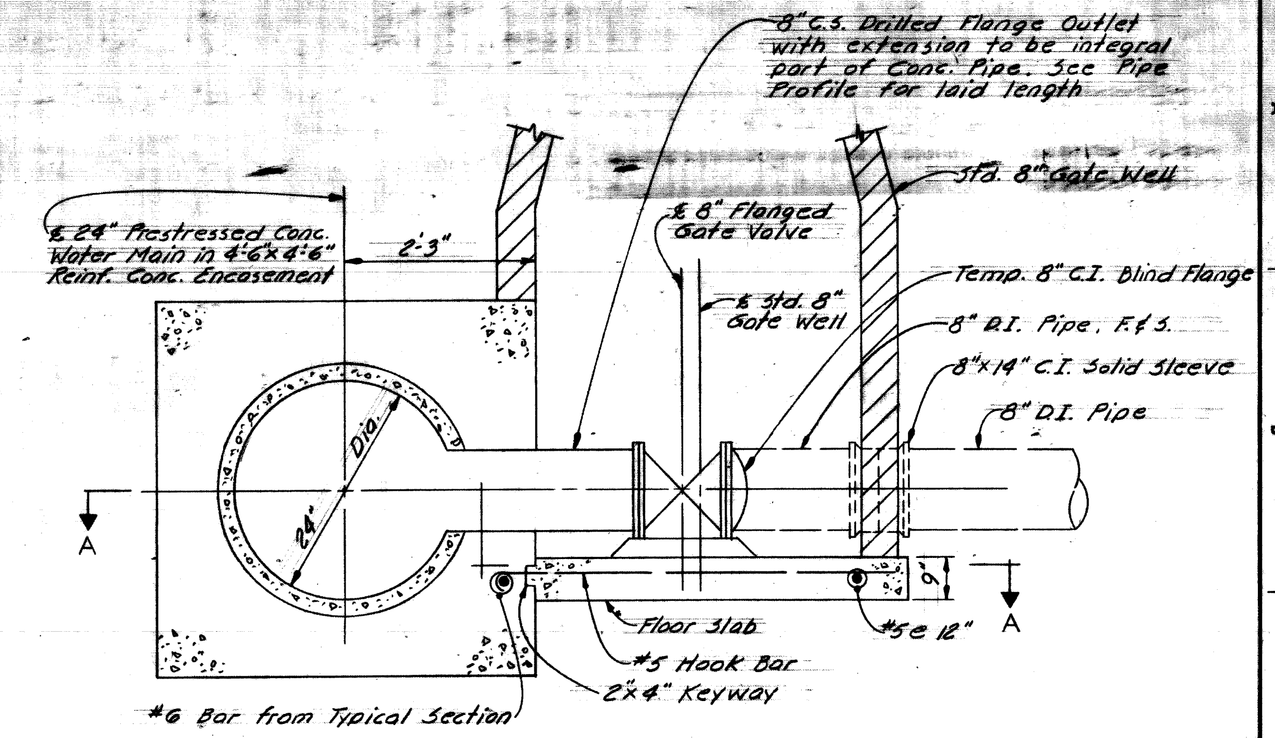

ELEVATION

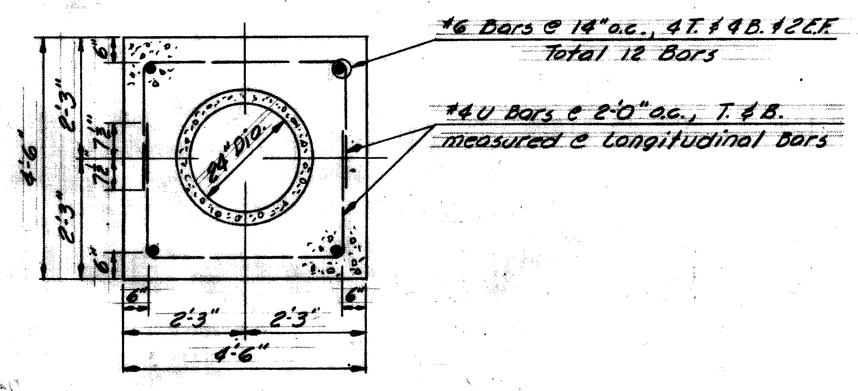

TYPICAL SECTION OF 24" PRESTRESSED CONCRETE WATER MAIN IN 4'-6"x4'-6" REINFORCED CONCRETE ENCASEMENT

Scale: ½"=1'-0"

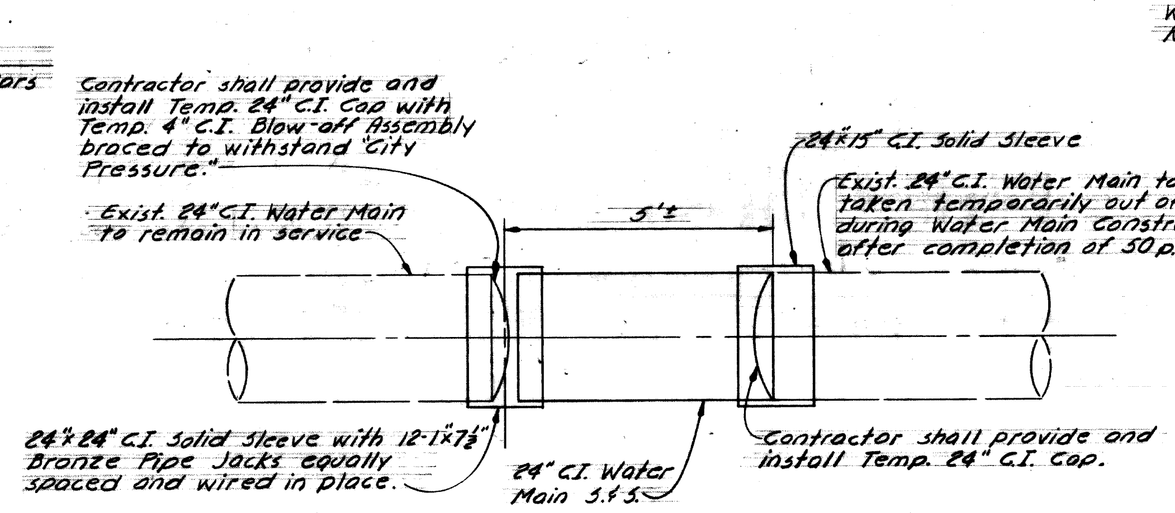

PLAN

DETAIL "Z" FROM DWG. NO. 6

No Scale

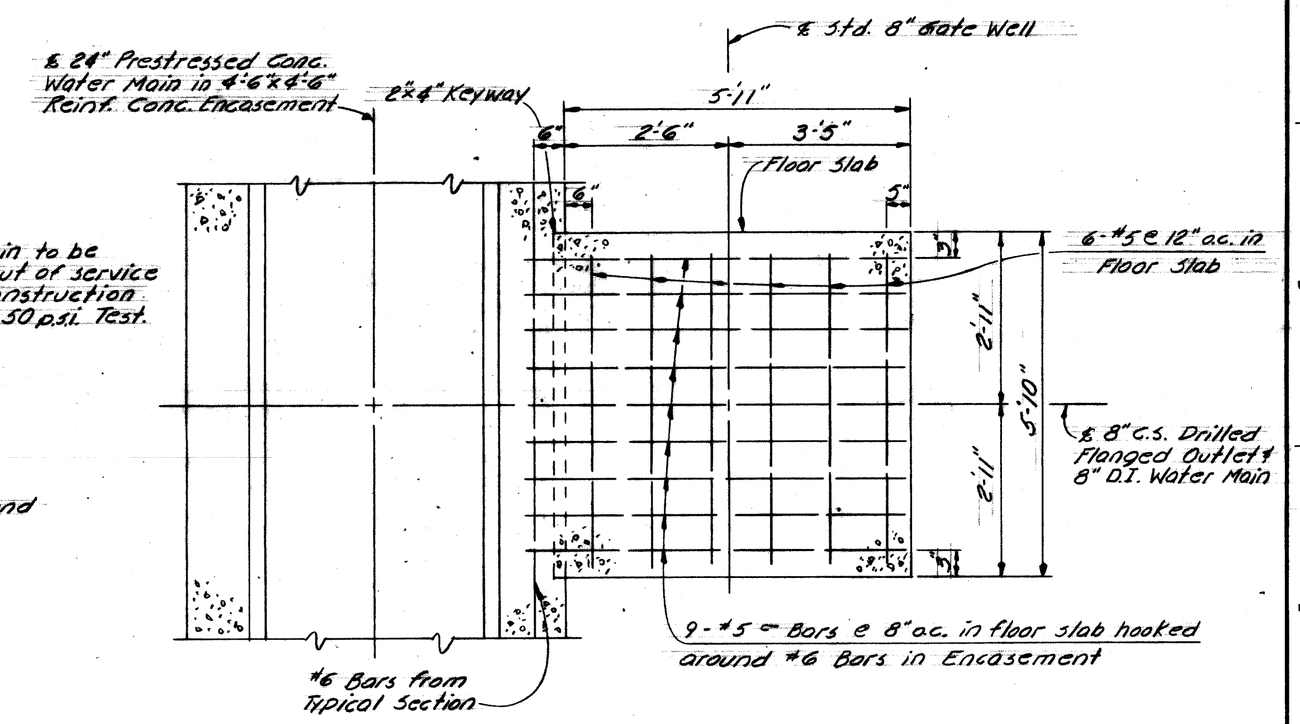

SECTION A-A

REINFORCEMENT STEEL DETAILS FOR 8" GATE WELL FLOOR SLAB TIED TO 24" WATER MAIN IN ENCASEMENT

No Scale

Notes for Tunnel Section

Extreme care shall be taken in placing concrete fill to insure that space between tunnel liner and concrete pipe is completely filled. Method of placing concrete fill is subject to approval of Engineer.

Provide 3'-0" min. lap of 4'-6"x4'-6" Encasement steel into Tunnel.

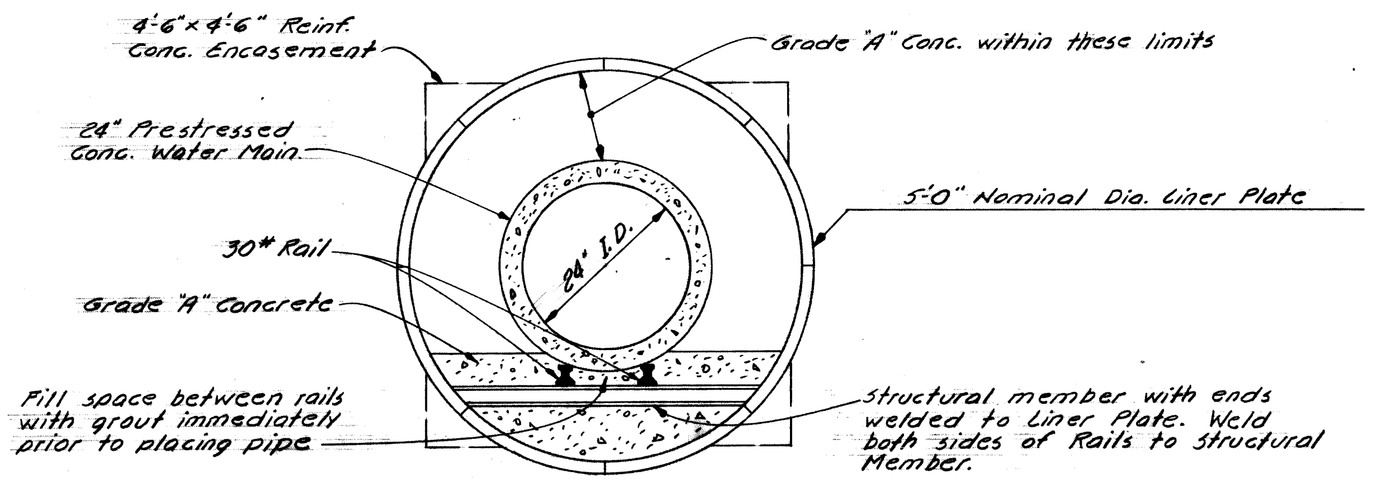

TYPICAL TUNNEL SECTION FOR 24" WATER MAIN

No Scale

21-M

T4000(3)

DETROIT METRO WATER DEPARTMENT
WATER SYSTEM

CORRECT J. H. W. | APPROVED [illegible] | APPROVED R. R. Wares ASSISTANT CHIEF ENGINEER
CHECKED J. H. W.
DATE 4-27-72 | JOB NO. D-982-1 | DRAWING NO. 10 OF 14

EGB-1

COORD	DESCRIPTION	DR'N	CK'D	AP'VD	DATE
REVISIONS LOCATED BY COORDINATES ON SHEET					

REFERENCE DRAWINGS

DESIGNED BY	B. COMLY
DRAWN BY	A.G.
TRACED BY	A.G.
CHECKED BY	

APPROVED:

CITY ENGINEER

CITY OF DETROIT
DEPARTMENT OF PUBLIC WORKS
CITY ENGINEERS OFFICE

EAST GRAND BOULEVARD OVER GRAND TRUNK RAILROAD GRADE SEPARATION – WATER MAIN ALTERATIONS

24" WATER MAIN ENCASEMENT, TUNNEL SECTION, PIPE JACK AND CONNECTION DETAILS

COUNTY PROJECT | COUNTY JOB | ISSUE NO. | DATE | SHEET NO. 11

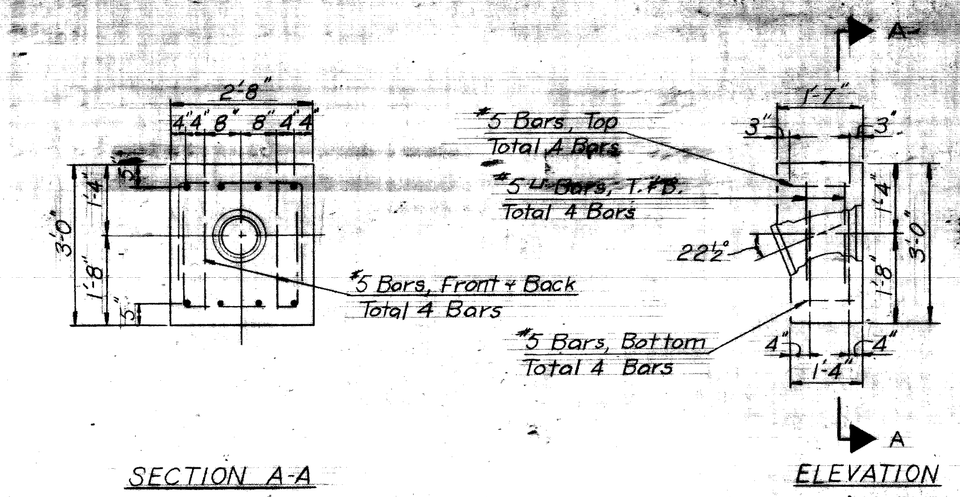

DETAIL OF 22½° TOP BEND

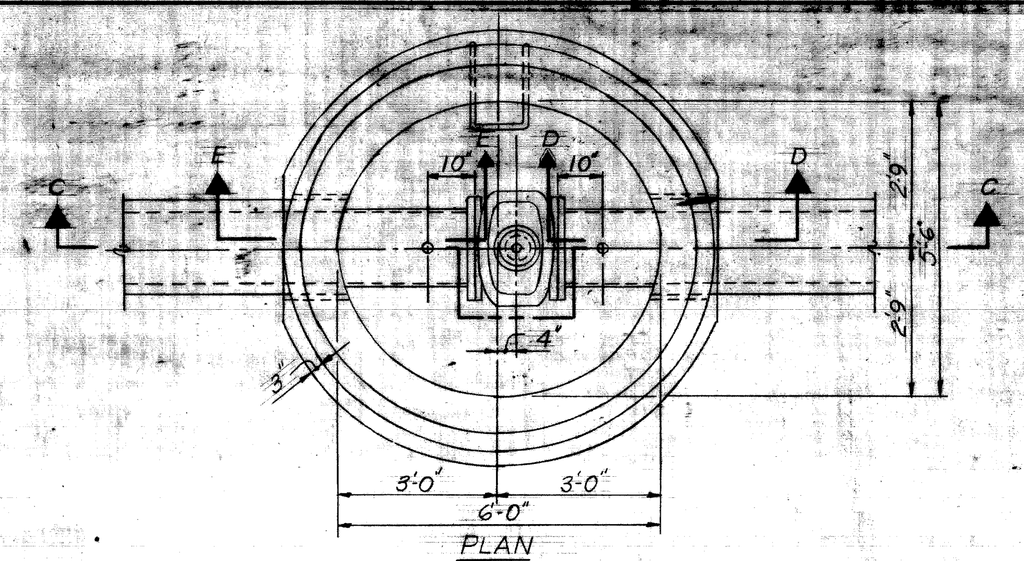

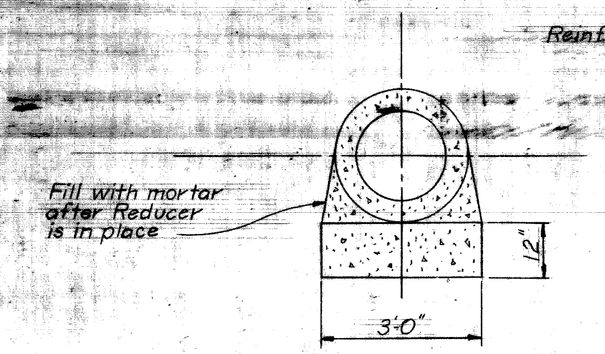

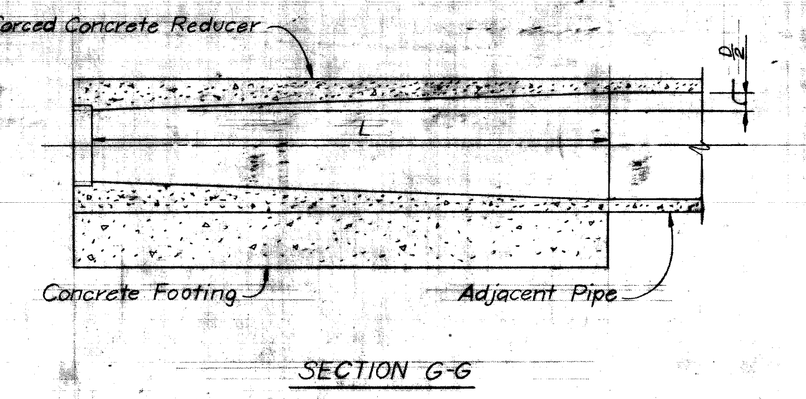

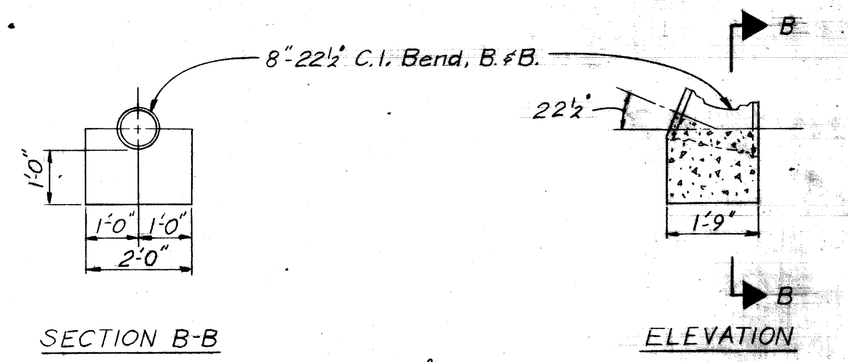

DETAIL OF 22½° BOTTOM BEND

THRUST BLOCK DETAILS FOR 8"-22½° C.I. VERT. BENDS

Scale: ½" = 1'-0"

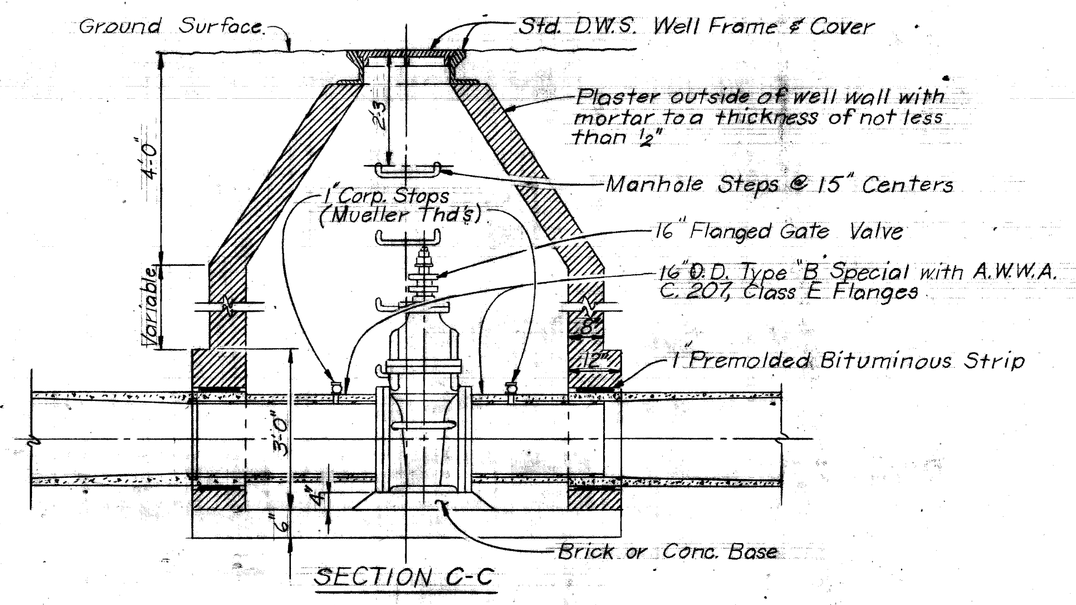

Note:
For D=12" or less, L=6'-6" Min.
For D=18", L=10'-0" Min.

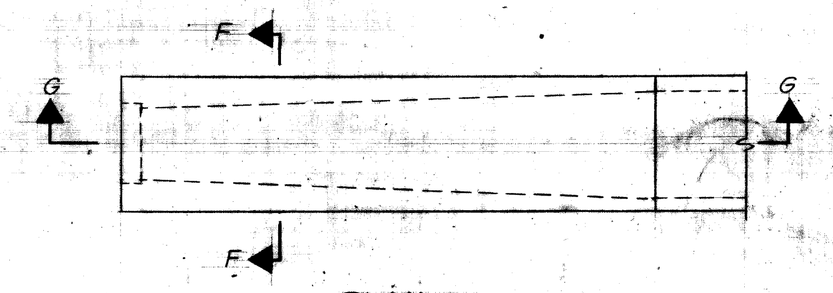

FOOTING UNDER EACH CONCRETE PIPE REDUCER

Not to Scale

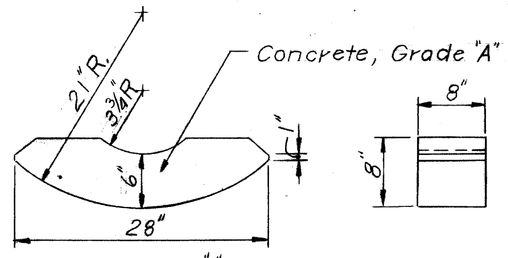

DETAIL "A"
CONCRETE PIPE SUPPORT
DETAIL FOR 6" D.I. PIPE IN TUNNEL

No Scale

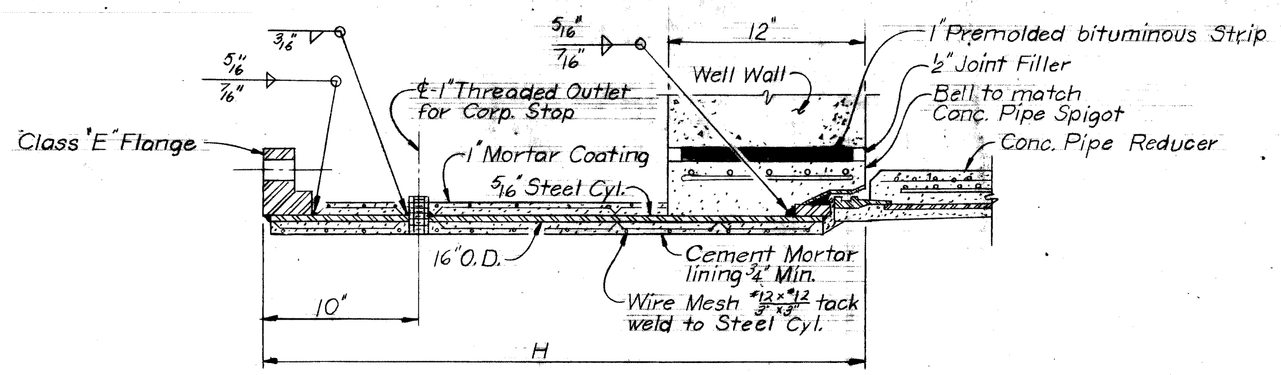

SECTION D-D

Not to Scale

NOTES FOR TUNNEL SECTION

The bid item for 42" A.S.T.M. C-76-Class V Wall "B" Extra Strength Reinf. Conc. Culvert Pipe Jacked in Place shall include Pipe Supports & all work & material req'd. for this installation with the exception of 6" D.I. Water Main which is a seperate bid item. An 8" brick bulkhead (laid loose) shall be installed at each end of tunnel.

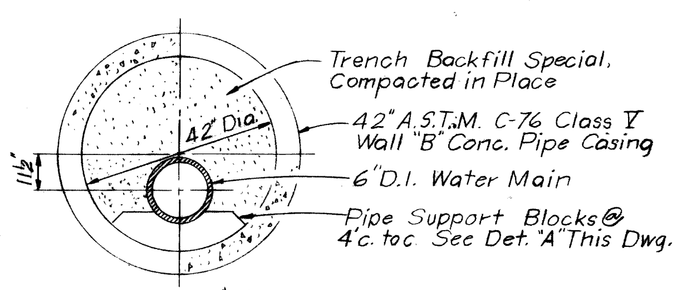

DETAIL "B"
TYPICAL J.I.P. TUNNEL SECTION
FOR 6" D.I. WATER MAIN

No Scale

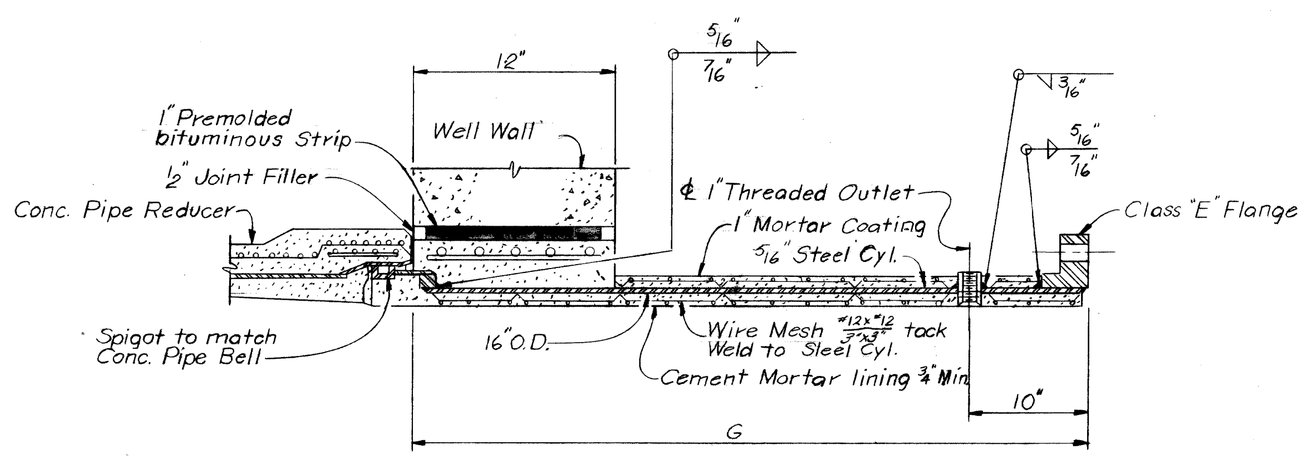

SECTION E-E

Not to Scale

Note:
Dimension G & H to suite Valve dimensions

SPECIAL 16" FLANGED GATE VALVE WELL DETAILS

EGB-1

T4000(3)

21-M

DETROIT METRO WATER DEPARTMENT
WATER SYSTEM

CORRECT	APPROVED	APPROVED
CHECKED		ASS'T CHIEF ENGINEER
DATE 4-27-72	JOB NO. D-982-1	DRAWING NO. 11 OF 14

CO'R'D	DESCRIPTION	DR'N	CK'D	AP'VD	DATE	REFERENCE DRAWINGS	
REVISIONS LOCATED BY COORDINATES ON SHEET						DESIGNED BY	
						DRAWN BY	G.E.
						TRACED BY	
						CHECKED BY	

APPROVED:

CITY ENGINEER

CITY OF DETROIT
DEPARTMENT OF PUBLIC WORKS
CITY ENGINEERS OFFICE

EAST GRAND BOULEVARD OVER GRAND TRUNK RAILROAD
GRADE SEPARATION—WATER MAIN ALTERATIONS

DETAILS OF SPECIAL 16" FLANGED GATE VALVE WELL, VERTICAL THRUST BLOCKS, 6" TUNNEL, & CONCRETE PIPE REDUCER

COUNTY PROJECT	COUNTY JOB
ISSUE NO.	SHEET NO. 12
DATE	

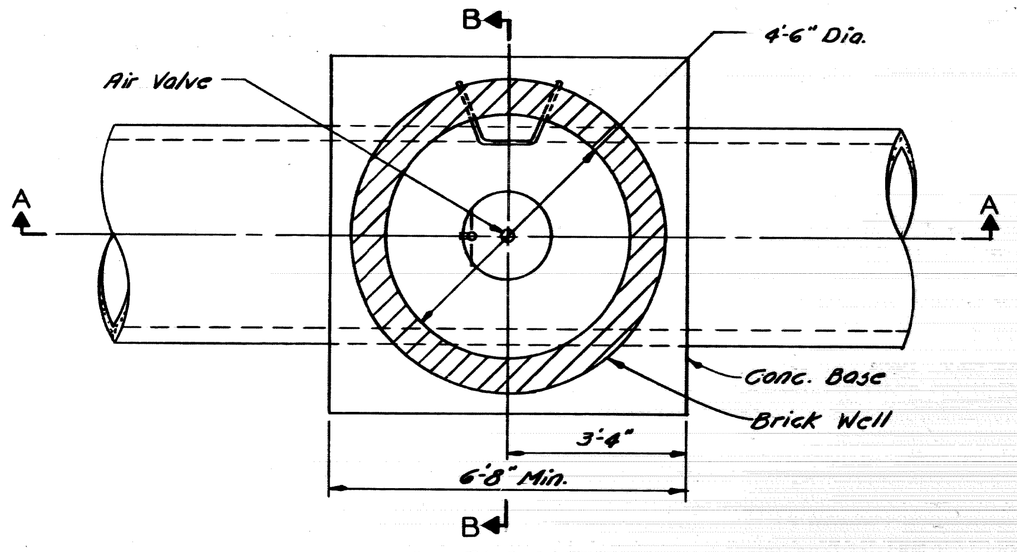

PLAN

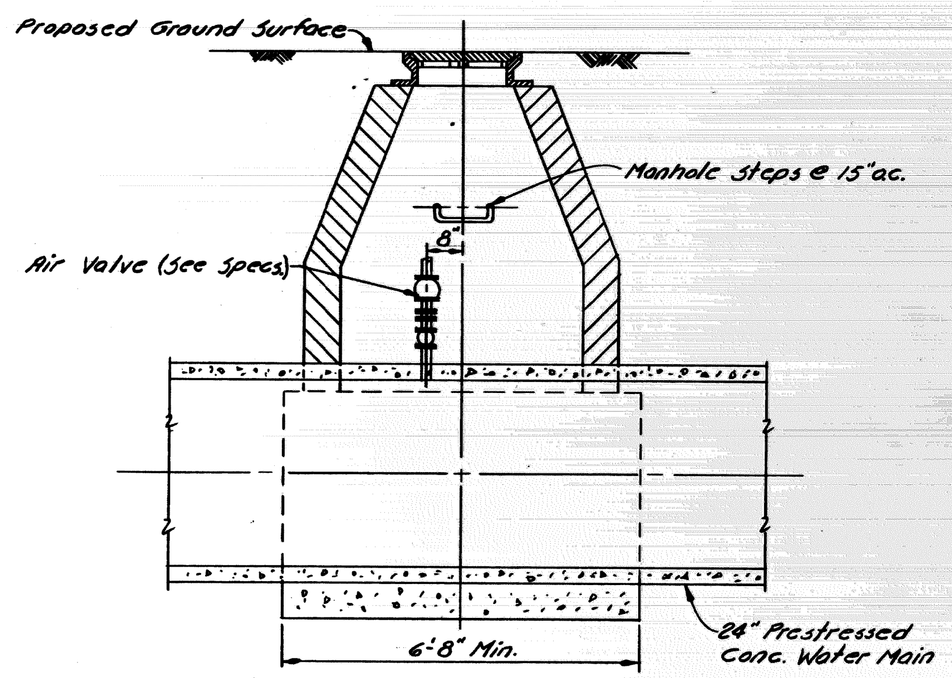

SECTION A-A

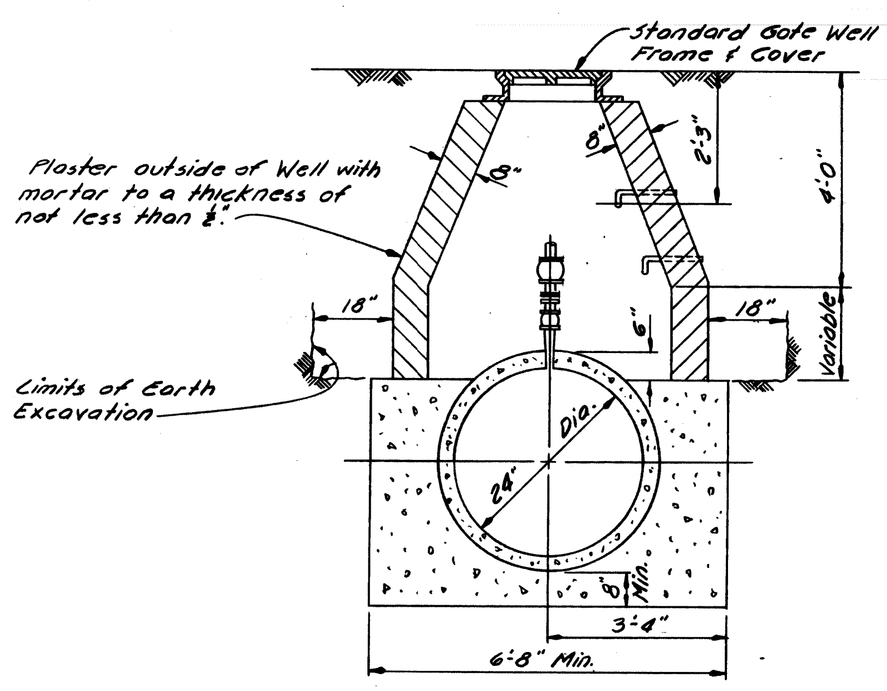

SECTION B-B

DETAIL OF AIR VALVE AND WELL FOR 24" WATER MAIN

No Scale

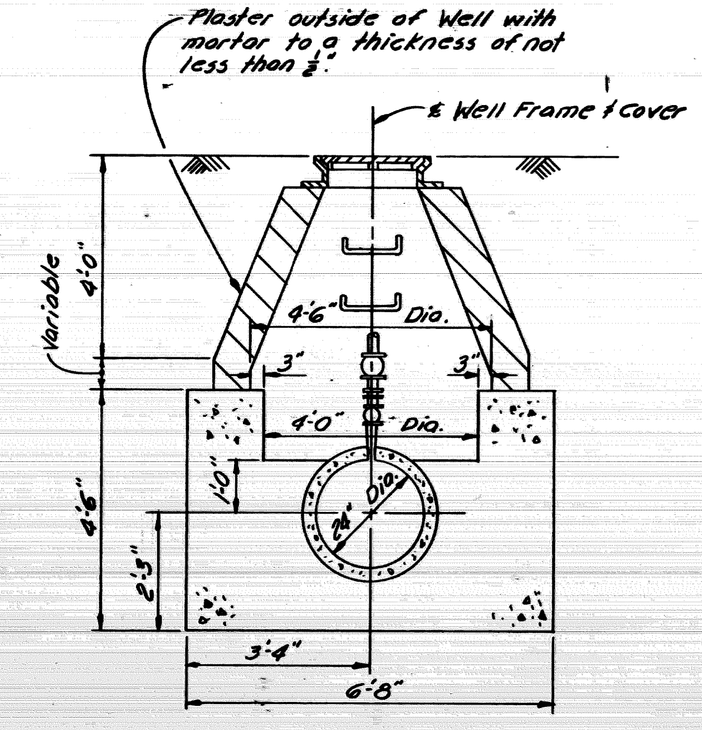

SECTION B-B

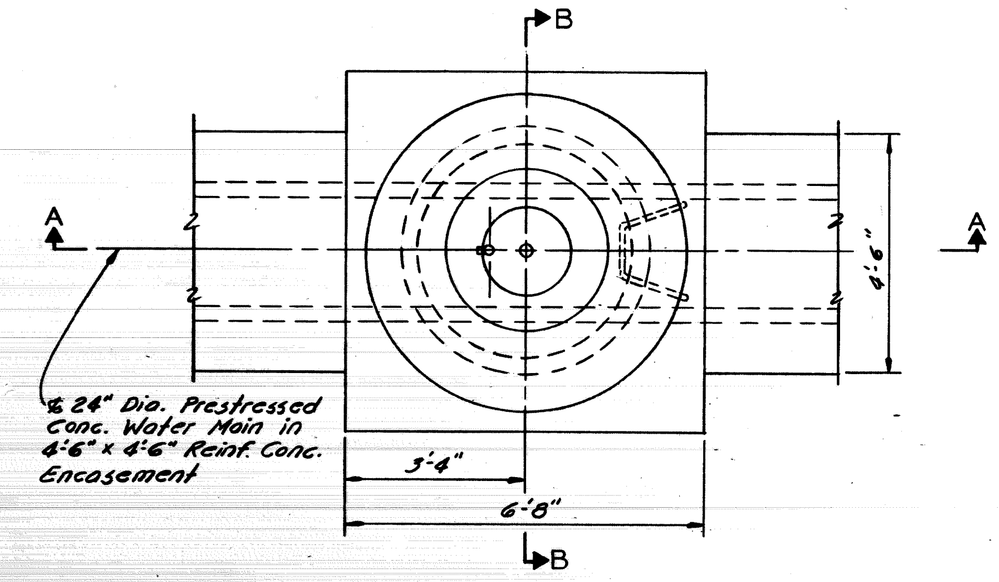

PLAN

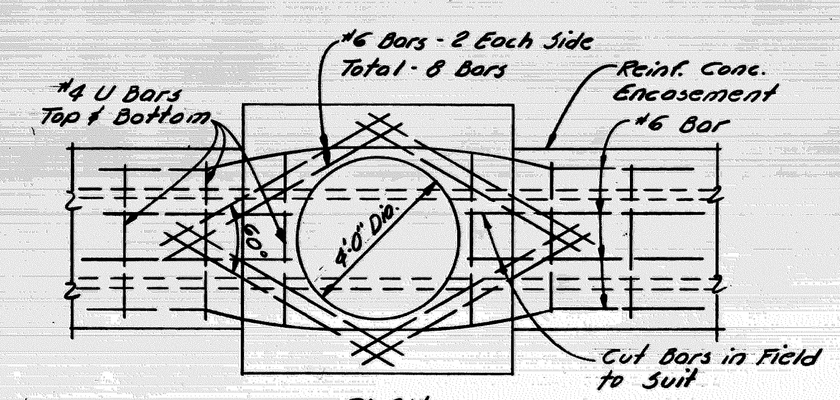

PLAN

STEEL DETAILS AT AIR VALVE WELL FOR 24" WATER MAIN IN ENCASEMENT

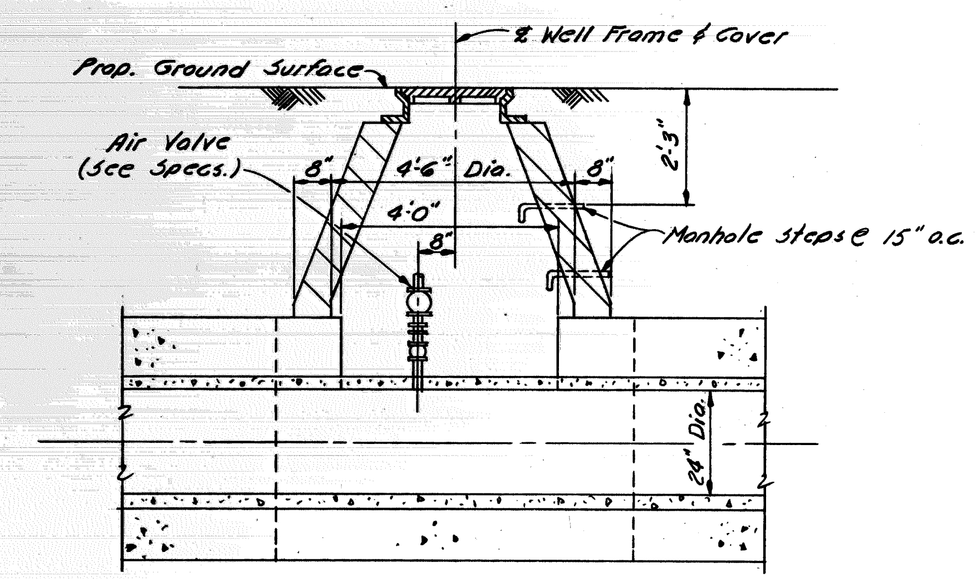

SECTION A-A

DETAIL OF AIR VALVE AND WELL FOR 24" ENCASED WATER MAIN

No Scale

T4000 (3)

21-M

EGB-1

DETROIT METRO WATER DEPARTMENT
WATER SYSTEM

CORRECT J. H. (L)	APPROVED H. Z.	APPROVED H. E. Wenzer Jr. ASSISTANT CHIEF ENGINEER
CHECKED J. H. (L)		
DATE 04-27-72	JOB NO. D-982-1	DRAWING NO. 12 OF 14

COOR'D	DESCRIPTION	DR'N	CK'D	AP'VD	DATE

REVISIONS LOCATED BY COORDINATES ON SHEET

REFERENCE DRAWINGS

DESIGNED BY	
DRAWN BY	
TRACED BY	A.G.
CHECKED BY	

APPROVED:

CITY ENGINEER

CITY OF DETROIT
DEPARTMENT OF PUBLIC WORKS
CITY ENGINEERS OFFICE

EAST GRAND BOULEVARD OVER GRAND TRUNK RAILROAD GRADE SEPARATION– WATER MAIN ALTERATIONS

AIR VALVE WELL DETAILS FOR 24" WATER MAIN

COUNTY PROJECT | COUNTY JOB

ISSUE NO. ____ DATE ____

SHEET NO. 13

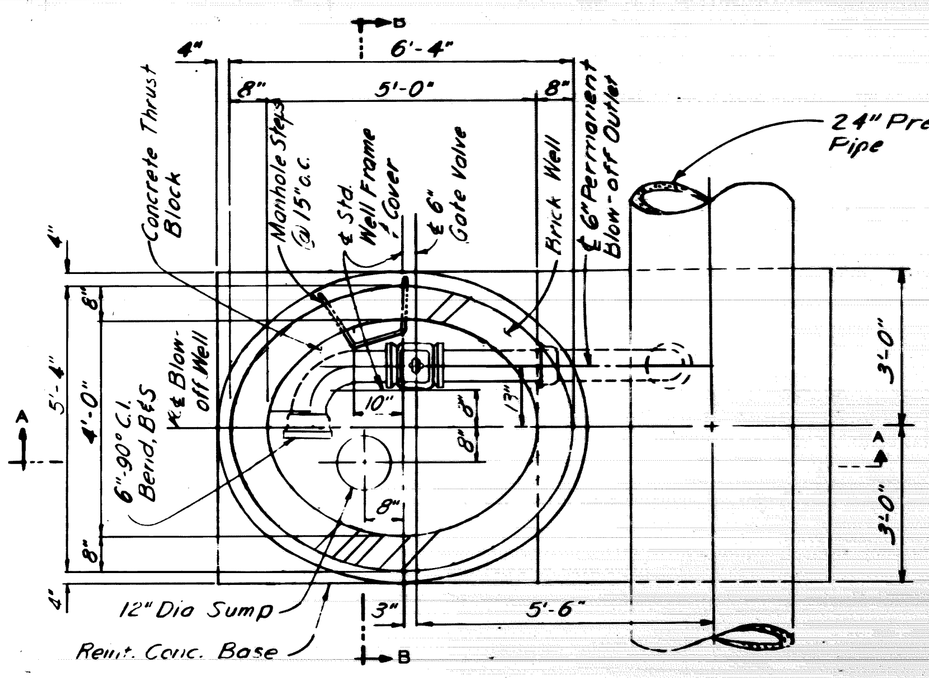

PLAN

BILL OF REINFORCING BARS				
Mark	No.	Size	Length	Remarks
4-50	24	#4	5'-0"	Straight
6-110	6	#6	11'-0"	"
7-110	11	#7	11'-0"	"

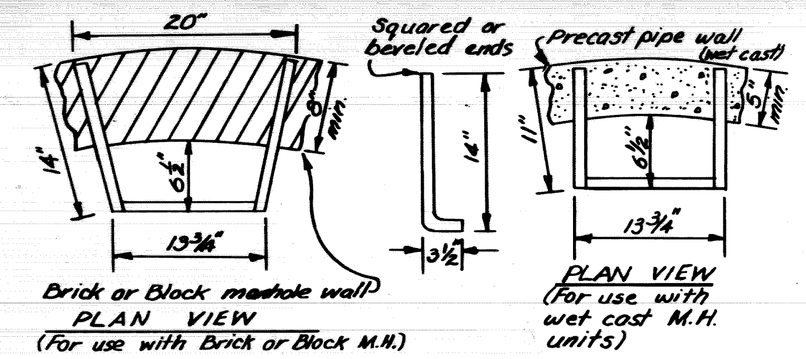

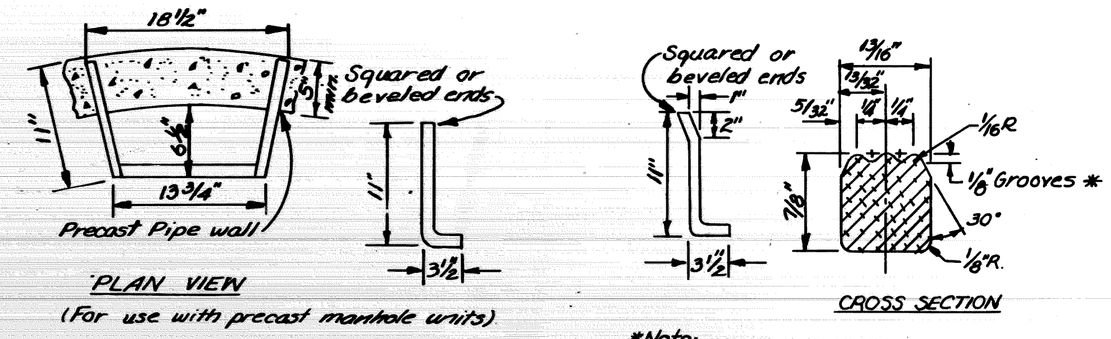

*Note:
In lieu of grooves, alternate foot hold configurations will be considered for approval.

Note:
1. Manhole steps shall conform to the requirements for "Aluminum Alloy Extruded Bars, Rods, Shapes and Tubes", A.S.T.M. B 221 (current), Alloy 6061, Temper T-6, or approved equal.
2. Either the flared leg or parallel leg step may be used for poured in place concrete construction or in wet cast manhole units.
3. The parallel leg step shall be used in existing structures by placing in drilled holes and grouting with non-shrink grout.

DETAIL OF MANHOLE STEPS
No Scale

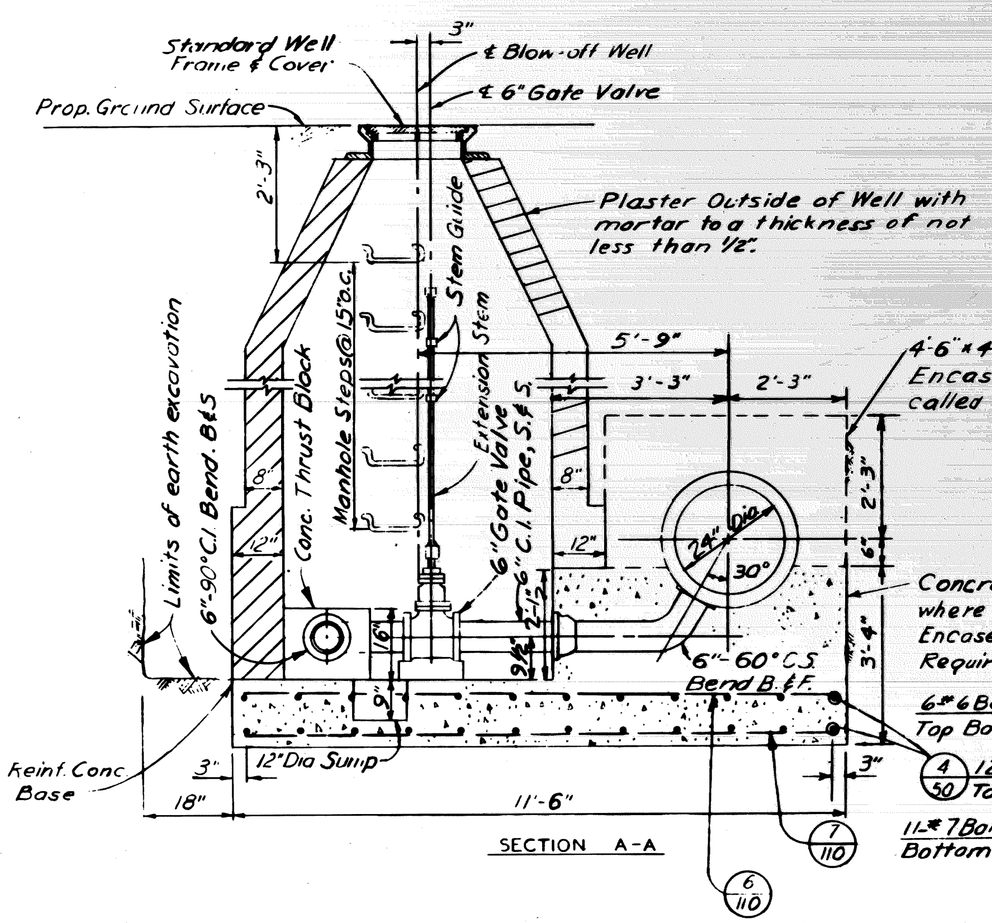

SECTION A-A

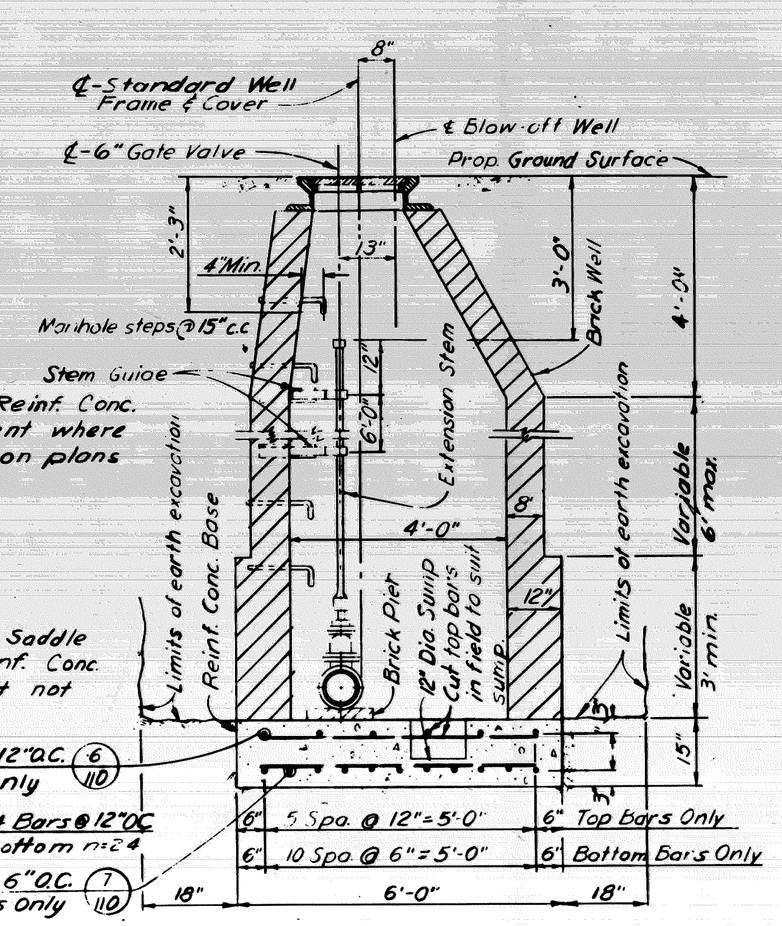

SECTION B-B

DETAIL OF 6" BLOW-OFF WELL FOR 24" WATER MAIN
No Scale

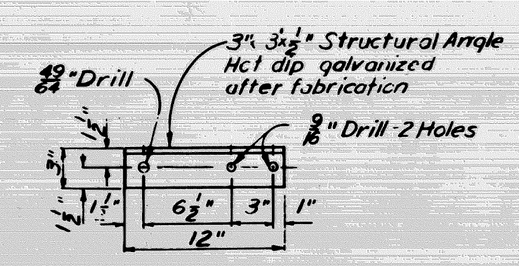

DETAIL OF WALL BRACKET

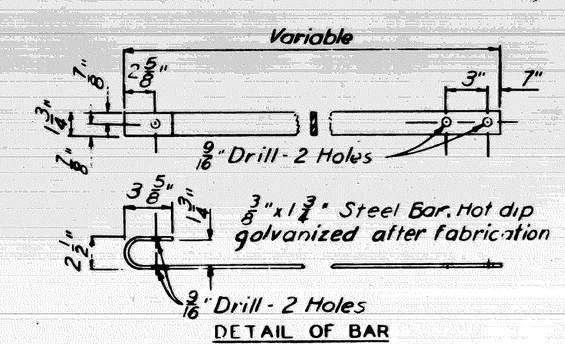

DETAIL OF BAR

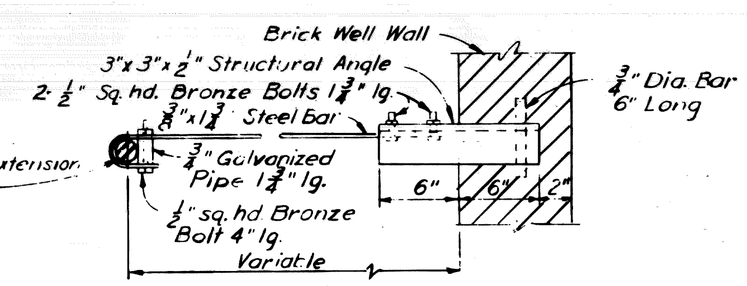

ASSEMBLY

DETAIL OF EXTENSION STEM GUIDE
Scale 1½" = 1'-0" 1 Req'd

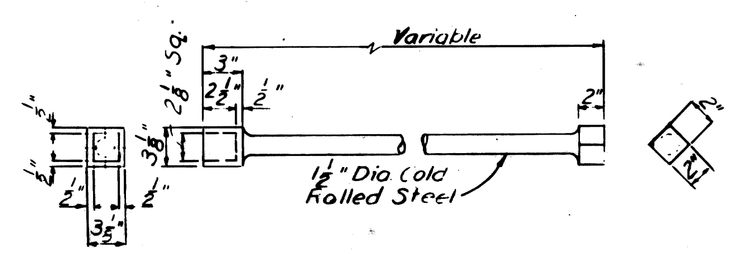

DETAIL OF EXTENSION STEM FOR 6" BLOW-OFF WELLS
Scale: 1½" = 1'-0" 1 Req'd

T4000(3)

21-M

EGB-1

DETROIT METRO WATER DEPARTMENT
WATER SYSTEM

CORRECT J.H. 4-27-72 APPROVED [illegible] APPROVED [illegible] ASSISTANT CHIEF ENGINEER
CHECKED J.H. 4-27-72
DATE 4-27-72 JOB NO. D-982-1 DRAWING NO. 13 OF 14

COOR'D	DESCRIPTION	DR'N	CK'D	AP'VD	DATE

REVISIONS LOCATED BY COORDINATES ON SHEET

REFERENCE DRAWINGS

DESIGNED BY
DRAWN BY C.E.
TRACED BY
CHECKED BY

APPROVED:
CITY ENGINEER

CITY OF DETROIT
DEPARTMENT OF PUBLIC WORKS
CITY ENGINEERS OFFICE

EAST GRAND BOULEVARD OVER GRAND TRUNK RAILROAD
GRADE SEPARATION—WATER MAIN ALTERATIONS

6" BLOW-OFF WELL DETAILS FOR 24" WATER MAIN

COUNTY PROJECT | COUNT JOB
ISSUE NO. | SHEET NO. 14
DATE

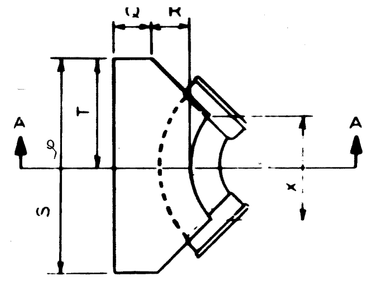

PLAN

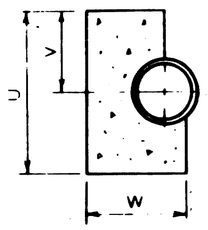

SECTION A-A

SCHEDULE OF THRUST BLOCK DIMENSIONS								
BEND SIZE	CODE							
	Q	R	S	T	U	V	W	X
6"ϕ 8" 90°	0' 9"	1' 0"	3' 4"	1' 8"	2' 6"	1' 3"	1' 11"	1' 2"
12" 90°	0' 9"	1' 4"	5' 6"	2' 9"	3' 0"	1' 6"	2' 4"	1' 8"
16" 90°	1' 0"	1' 8"	6' 0"	3' 0"	5' 0"	2' 6"	3' 0"	2' 8"
6"ϕ 8" 45°	0' 9"	1' 0"	2' 4"	1' 2"	2' 0"	1' 0"	1' 11"	1' 4"
12" 45°	0' 9"	1' 4"	3' 6"	1' 9"	2' 6"	1' 3"	2' 4"	1' 4"
16" 45°	1' 0"	1' 8"	5' 4"	2' 8"	3' 0"	1' 6"	3' 0"	2' 6"
6,8"ϕ 12" 22½°	0' 9"	1' 0"	2' 6"	1' 3"	2' 0"	1' 0"	2' 0"	1' 4"
16" 22½°	1' 0"	1' 8"	3' 4"	1' 8"	2' 6"	1' 3"	3' 0"	1' 2"

DETAIL OF STANDARD THRUST BLOCKS FOR BENDS

No Scale

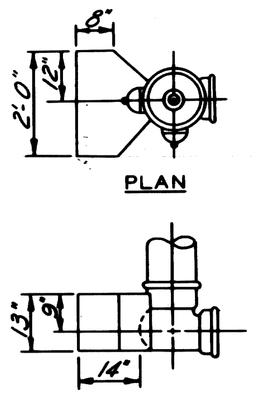

THRUST BLOCK FOR 6" HYDRANT

No Scale

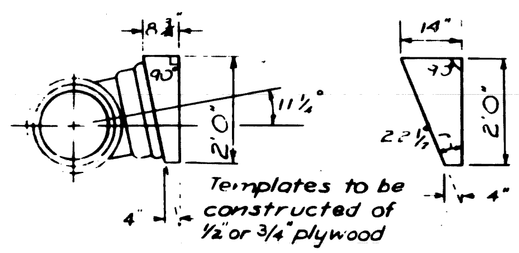

Templates to be constructed of ½" or ¾" plywood

TEMPLATE FOR SETTING TEES AT 11¼° & 22½° ANGLES

No Scale

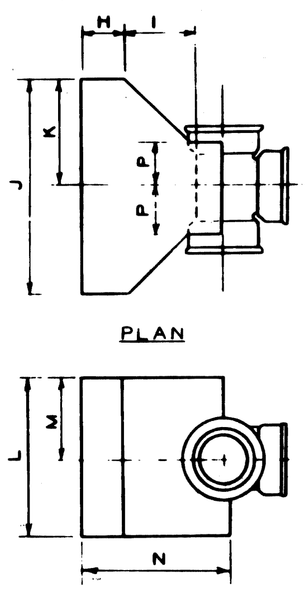

SCHEDULE OF THRUST BLOCK DIMENSIONS								
TEE SIZE	CODE							
	H	I	J	K	L	M	N	P
8" x 8"	0' 9"	1' 0"	3' 0"	1' 6"	2' 0"	1' 0"	8" 2' 3"	8" 0' 6"
12" x 8"							12" 2' 3"	12" 0' 6"
16" x 8"							16" 2' 9"	16" 0' 6"
12" x 12"	0' 9"	1' 4"	4' 0"	2' 0"	3' 0"	1' 6"	12" 2' 9"	8" 0' 8"
16" x 12"							16" 3' 1"	16" 0' 8"
16" x 16"	1' 0"	1' 8"	5' 0"	2' 6"	4' 0"	2' 0"	16" 3' 8"	16" 0' 11"

DETAIL OF STANDARD THRUST BLOCKS FOR TEES

No Scale

NOTES

The bearing face of all thrust blocks shall be poured against undisturbed earth.
Thrust Blocks will be required on all C.I. Bends 6 inches in Diameter or larger and greater than 11¼°.

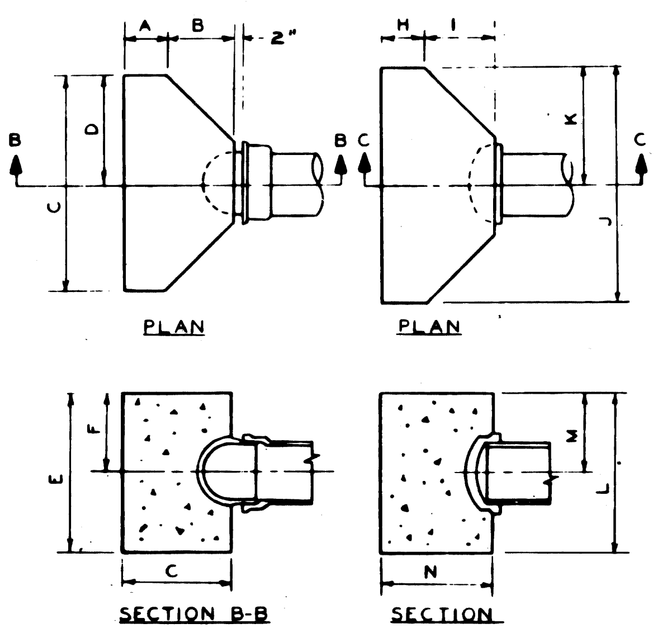

SCHEDULE OF THRUST BLOCK DIMENSIONS							
PLUG SIZE	CODE						
	A	B	C	D	E	F	G
6"ϕ 8"	0' 9"	1' 2"	3' 0"	1' 6"	2' 0"	1' 0"	1' 11"
12"	0' 9"	1' 4"	4' 0"	2' 0"	3' 0"	1' 6"	2' 1"
16"	1' 0"	1' 8"	5' 0"	2' 6"	4' 0"	2' 0"	2' 8"
CAP SIZE	CODE						
	H	I	J	K	L	M	N
6"ϕ 8"	0' 9"	1' 2"	3' 0"	1' 6"	2' 0"	1' 0"	1' 11"
12"	0' 9"	1' 4"	4' 0"	2' 0"	3' 0"	1' 6"	2' 1"
16"	1' 0"	1' 8"	5' 0"	2' 6"	4' 0"	2' 0"	2' 8"

DETAIL OF STANDARD THRUST BLOCKS FOR PLUGS & CAPS

No Scale

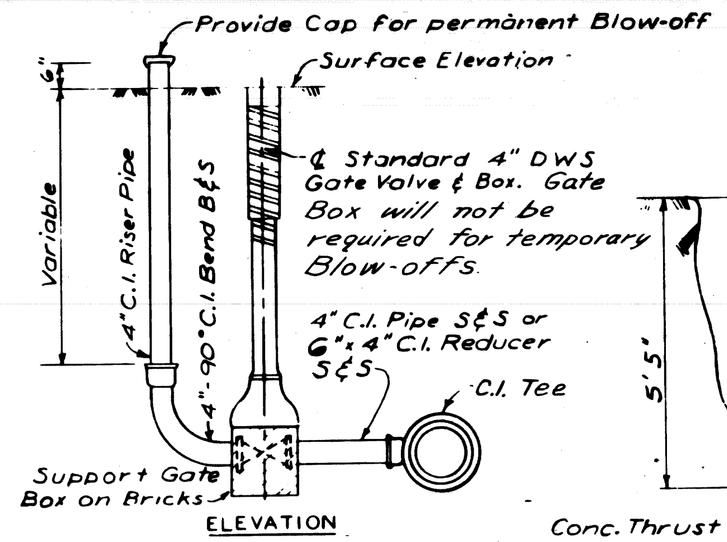

DETAIL OF 4" C.I. BLOW-OFF

No Scale

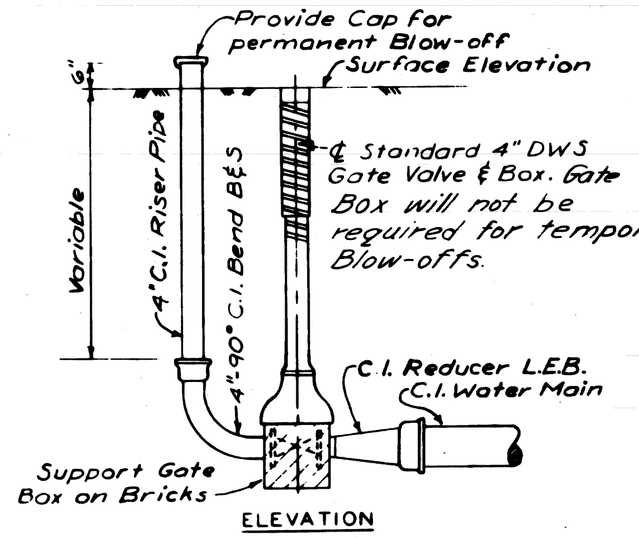

DETAIL OF 4" C.I. BLOW-OFF

No Scale

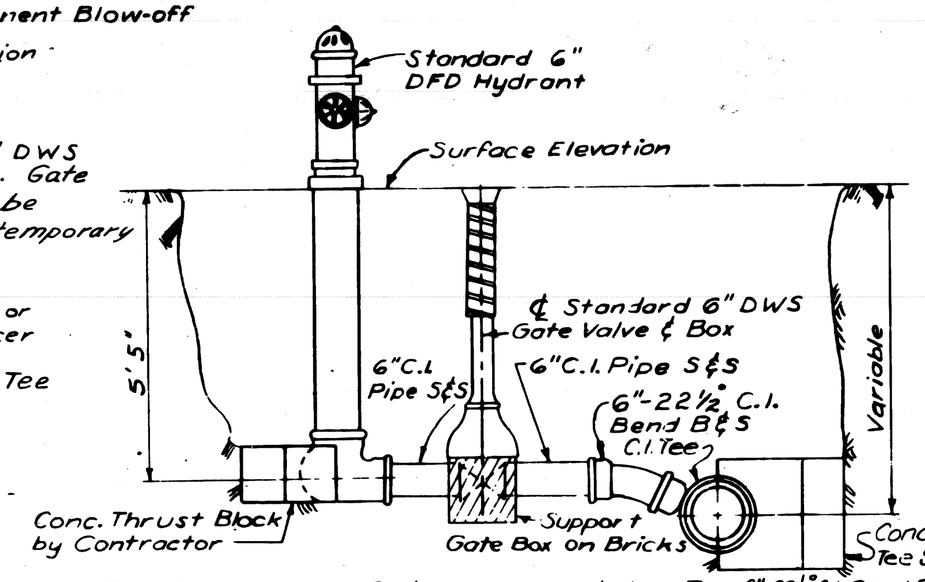

From the new main the Contractor shall install the Tee, 6"-22½° C.I. Bend B.&S., 6" C.I. Pipe, 6" D.W.S. Gate Valve & Box, 6" C.I. Pipe, Concrete Thrust Blocks, and Hydrant.
From any existing main the complete Hydrant installation shall be done by the Contractor.

Hydrants to be a minimum of 6' behind Curb, unless otherwise noted on the drawings.
Dimensions given from the Curb are from Pavement Joint line which is at face of Curb.

DETAIL OF 6" HYDRANT INSTALLATION

No Scale

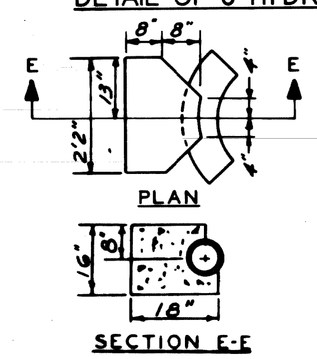

THRUST BLOCK FOR 6" HYDRANT BEND

No Scale

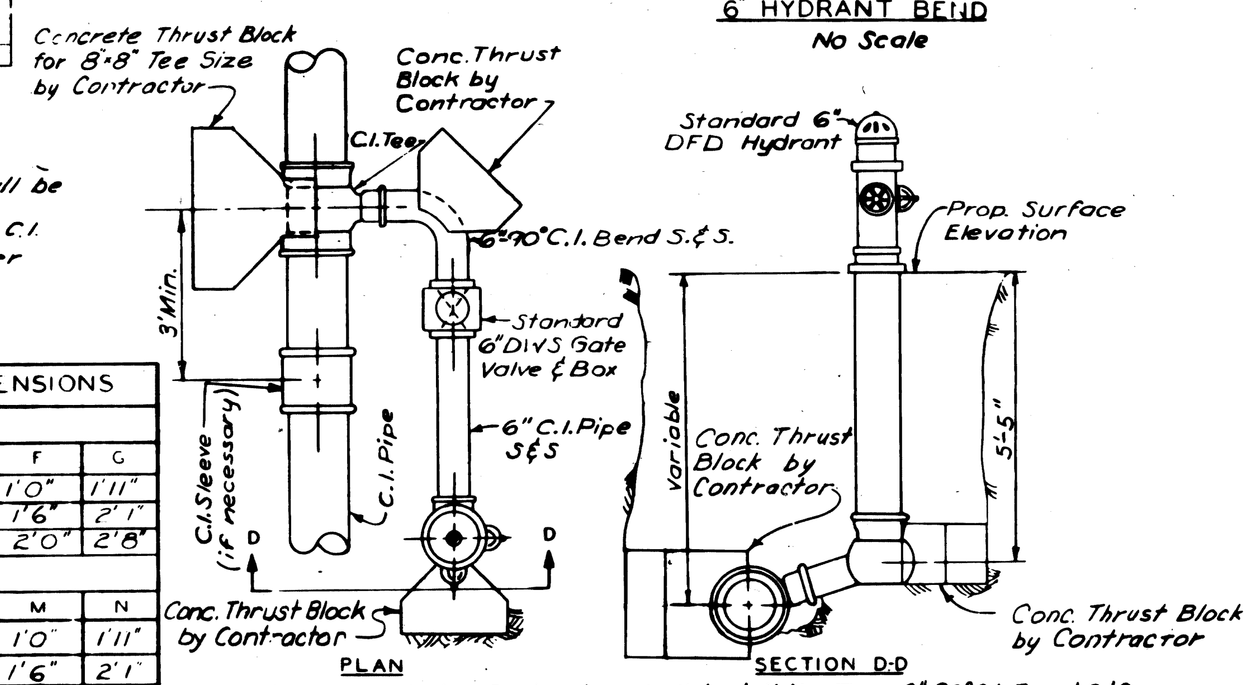

From the new main the Contractor shall install the Tee, 6" 90° C.I. Bend S.&S., 6" C.I. Pipe, 6" D.W.S. Gate Valve & Box, 6" C.I. Pipe Concrete Thrust Blocks and Hydrant.
From any existing main the complete Hydrant installation shall be done by the Contractor.

Hydrants to be a minimum of 6' behind the Curb, unless otherwise shown on the drawings.
Dimensions given from Curb are from Pavement Joint line which is at face of Curb

DETAIL OF 6" HYDRANT INSTALLATION

No Scale

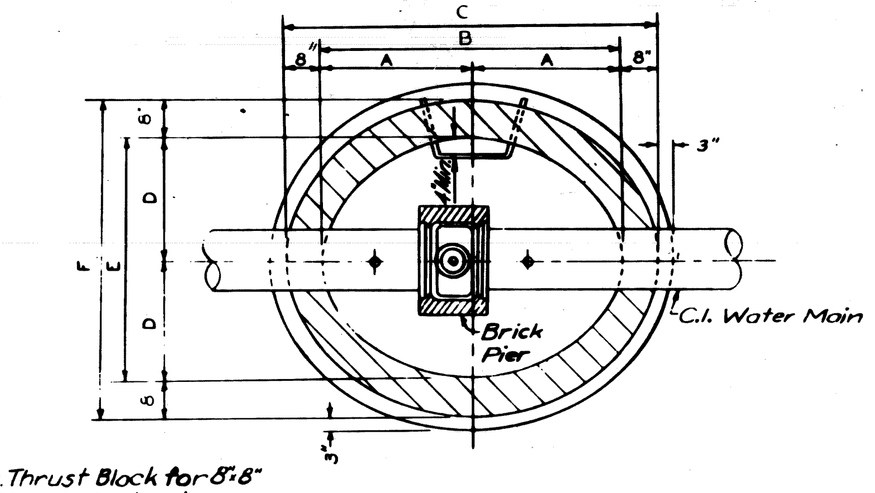

PLAN SECTION

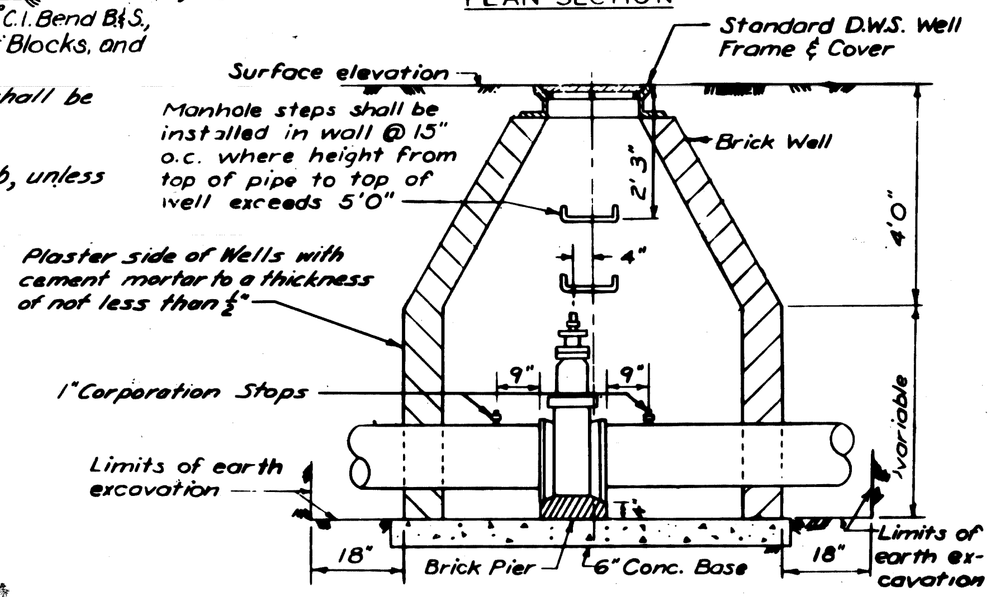

SECTION THROUGH GATE WELL

SCHEDULE OF GATE WELL DIMENSIONS						
SIZE	A	B	C	D	E	F
6"	2' 6"	5' 0"	6' 4"	2' 0"	4' 0"	5' 4"
8"	2' 6"	5' 0"	6' 4"	2' 0"	4' 0"	5' 4"
12"	2' 9"	5' 6"	6' 10"	2' 3"	4' 6"	5' 10"
16"	3' 0"	6' 0"	7' 4"	2' 9"	5' 6"	6' 10"

DETAIL OF STANDARD GATE WELLS

No Scale

21-M

T4000(3)

DETROIT METRO WATER DEPARTMENT
WATER SYSTEM

CORRECT J. H. Lee
CHECKED J. H. Lee
DATE 04-27-72
APPROVED H. H.
JOB NO. D-982-1
APPROVED H. R. Williams
ASSISTANT CHIEF ENGINEER
DRAWING NO. 14 OF 14

EGB-1

COORD	DESCRIPTION	DR'N	CK'D	AP'VD	DATE

REVISIONS LOCATED BY COORDINATES ON SHEET

REFERENCE DRAWINGS

DESIGNED BY
DRAWN BY G. E.
TRACED BY
CHECKED BY

APPROVED:
CITY ENGINEER

CITY OF DETROIT
DEPARTMENT OF PUBLIC WORKS
CITY ENGINEERS OFFICE

EAST GRAND BOULEVARD OVER GRAND TRUNK RAILROAD
GRADE SEPARATION – WATER MAIN ALTERATIONS

MISCELLANEOUS DETAILS

COUNTY PROJECT
COUNTY JOB
ISSUE NO.
DATE
SHEET NO. 15