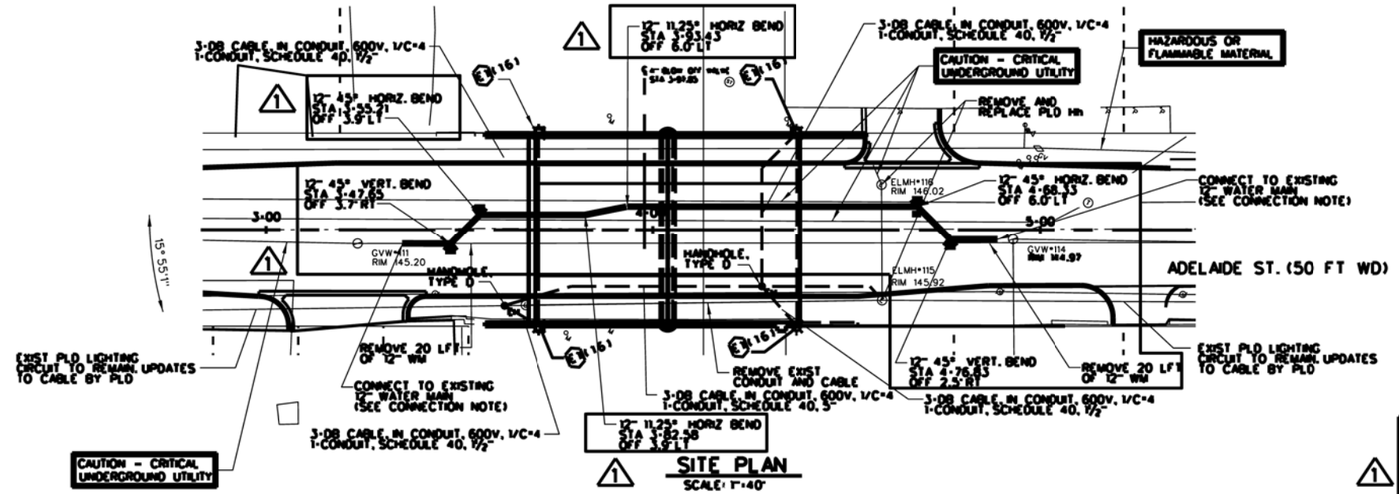

SITE PLAN

SCALE: 1"=40'

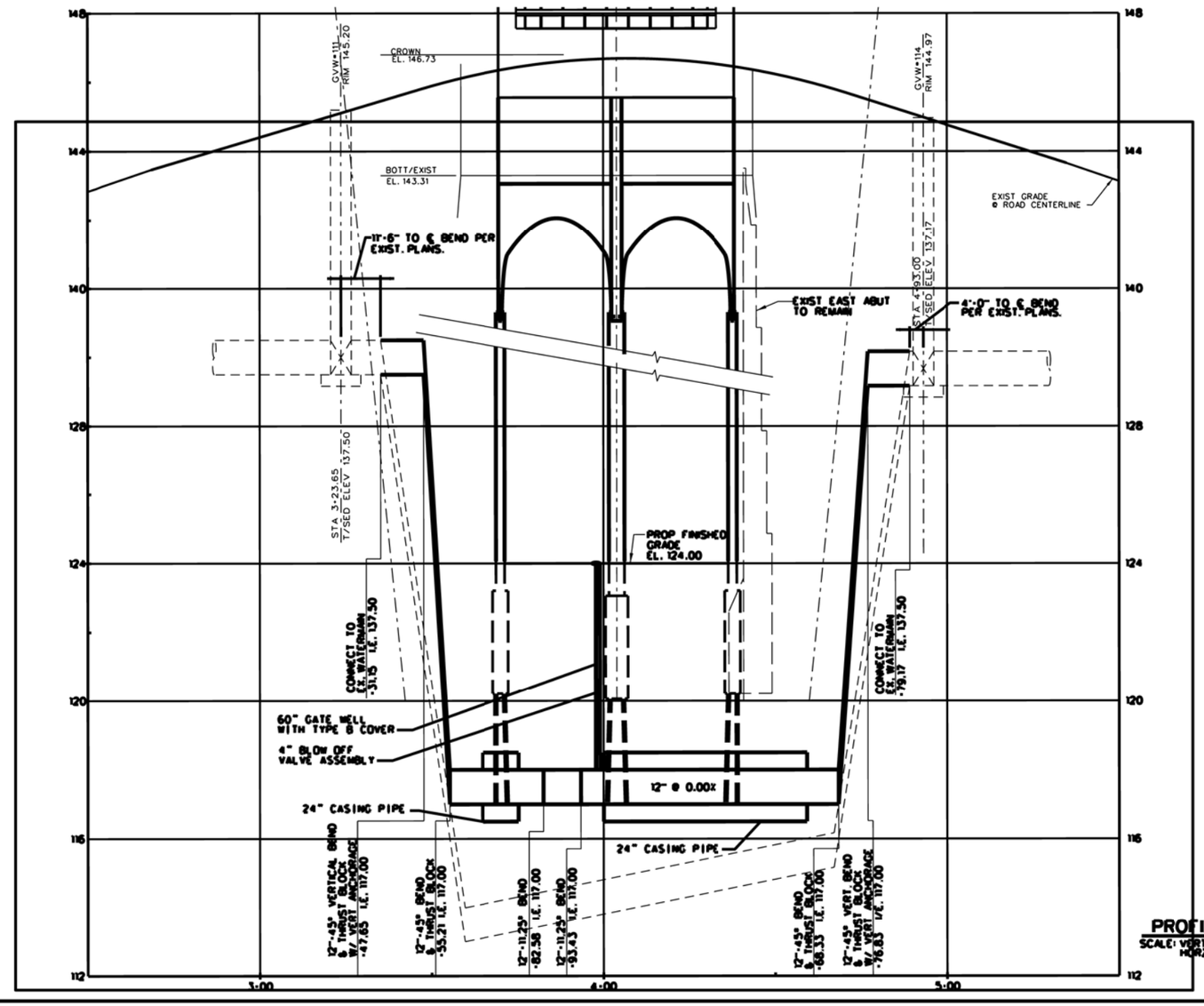

PROFILE

SCALE: VERT 1"=2' HORZ 1"=20'

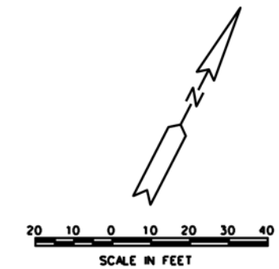

WATER MAIN QUANTITIES

1	172	FT	WATER MAIN, DI, 12 INCH, TR DET G
	40	FT	WATER MAIN, REM
	4	CYD	FLOWABLE FILL, NON-STRUCTURAL
1	1	EA	GATE VALVE & BOX, 4 INCH
1	70	FT	STEEL CASING PIPE, 24 INCH, TR DET G
	1	EA	GATE WELL, 60 INCH DIA
	1	EA	DR STRUCTURE COVER, TYPE B

PLD QUANTITIES

97	FT	CABLE, REM
115	FT	CONDUIT, SCHEDULE 40, 1½ INCH
100	FT	CONDUIT, SCHEDULE 40, 3 INCH
2	EA	HH, REM
4	EA	HH, TYPE D
4	EA	FIXTURE TYPE E1
650	FT	DB CABLE, IN CONDUIT, 600V, 1/C#4

PLD NOTES:

SEE SHEET 30 FOR PLD HANDHOLE DETAILS.

THE PVC CONDUIT SHALL BE PLACED IN THE FILL AREA BETWEEN TOP OF ARCHES AND ROADWAY SUBBASE. COORDINATE WITH PRECAST DWGS AS TO LOCATION OF DUCT CONNECTION AT PRECAST HEADWALL.

REMOVAL OF EXIST PLD CONDUIT IS INCLUDED IN THE PAY ITEM "STRUCTURE, REM PORTIONS, MODIFIED."

THE NUMBER FOLLOWING (E) INDICATES POLE HEIGHT

FOR DETAILS OF FIXTURE TYPE E1 SEE PROJECT SHEET 396 (WILKINS SHEET 30) FOR DETAILS AND FIXTURE SCHEDULE.

DWSD NOTES:

SEE SPECIAL PROVISIONS FOR WORKING AROUND DWSD FACILITES.

SEE SHEET 31 FOR DWSD STANDARD DETAILS. FOR DETAILS OF GATE WELL WITH BLOW OFF VALVE, SEE DWSD STANDARD DETAILS.

CONNECT NEW 12" D.I. WATER MAIN TO EXISTING WATER MAIN AFTER HYDROSTATIC AND BACTERIAL TEST HAVE BEEN SUCCESSFULLY COMPLETED AND REVIEWED BY THE ENGINEER. INCLUDE IN PAY ITEM "WATER MAIN, DI, 12 INCH, TR DET G".

IF TIMBER PILES ARE ENCOUNTERED CONTRACTOR TO CUT DOWN TO 6'-0" BELOW PIPE INVERT. THIS WORK SHALL BE INCLUDED IN PAY ITEM "WATER MAIN, REM".

CONTRACTOR SHALL COORDINATE INSTALLATION OF WATER MAIN WITH FIBER OPTIC LINES. SEE SPECIAL PROVISIONS.

CONTRACTOR SHALL USE VERTICAL ANCHORS AT ALL VERTICAL BENDS IN WATERMAIN INSTALLATION.

REV#	DATE	DESCRIPTION	BY
1	10/28/13	FOUNDATION REVISION	RRB

NOT VALID FOR CONSTRUCTION UNLESS SIGNED AND DATED

WADETRIM
500 Griswold, Suite 2500
Detroit, MI 48226
313.961.3650
FAX 313.961.0888
www.wadetrim.com

Building relationships on a foundation of excellence.

CITY OF DETROIT
DEPARTMENT OF PUBLIC WORKS
CITY ENGINEERING DIVISION

ADELAIDE ST. OVER DEQUINDRE CUT S.N. 12446

PLD/DWSD PLAN AND DETAILS

ISSUED FOR: DATE: BY:

JOB NO. DTE 2025-09T

SHEET 29 (436)

ADELAIDE STREET BRIDGE

© Wade Trim Group, Inc.

PROJECT MANAGER: - FIELD BOOK INFORMATION: - PLOTTED $DATE$ $TIME$ BY $USER$ $FILE$