ZENITH A. & B. SMITH-PGH., PA. M-0990-56a

D-81XC REV. 566

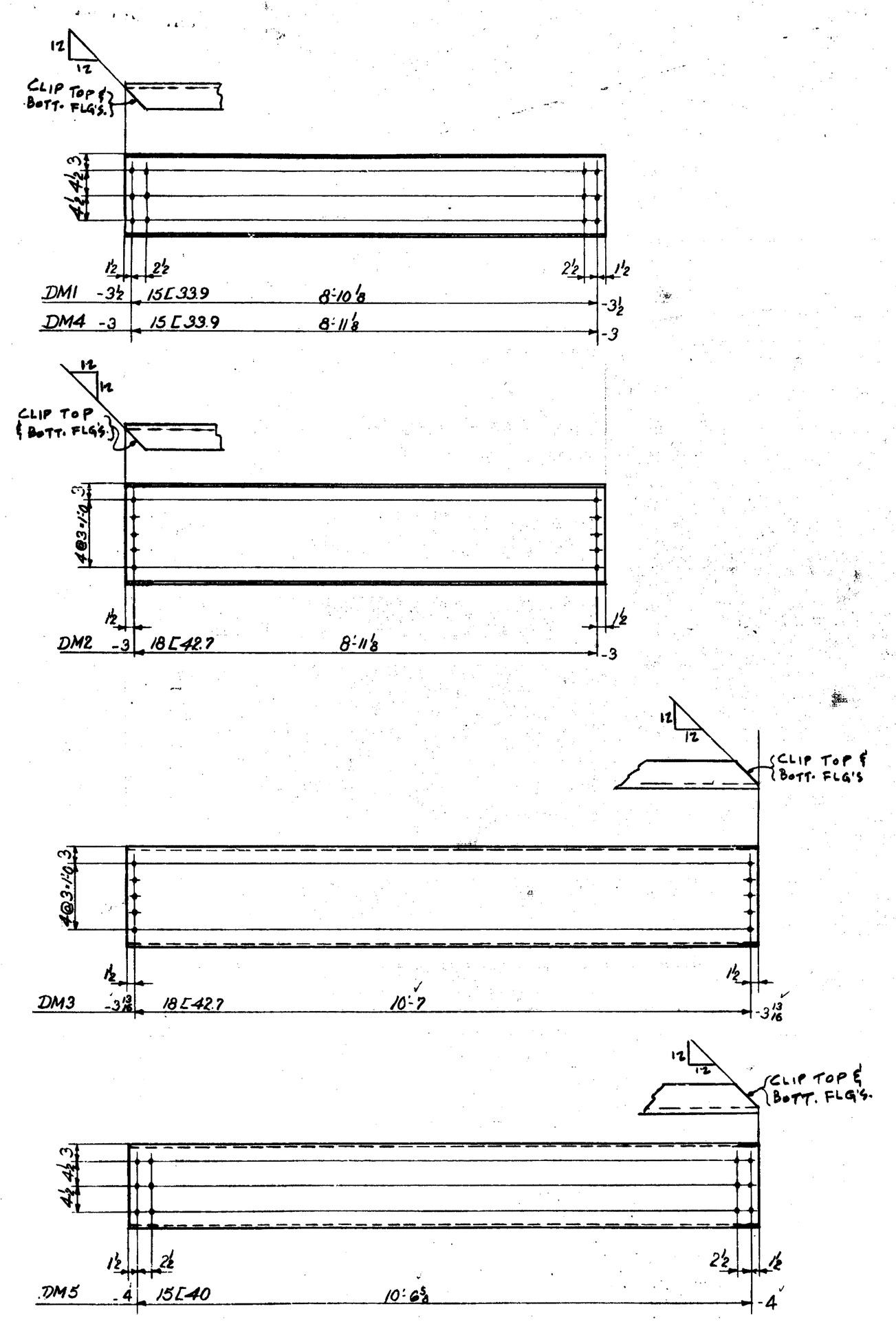

All steel shall be handled carefully and shall be kept free and clean of all foreign materials such as grease, oil, chalk marks, crayon marks, dirt, etc.

All shipping marks shall be made using a steel die.

The rounding of corners will not be required

DIV.	LINE NO.	TOTAL NO. OF PCS. ON ORDER	MATERIAL: NO. OF PCS. ON SKETCH	ABBRV. DESC.	DIMENSIONS	LENGTH FEET	LENGTH INCH	FINISH AND TEMP DESC.	FINISH AND TEMP INCH	SHIPPING OR ASSEMBLING MARK	SHIPPING SPECIFICATIONS OR ASSEMBLING REFERENCE	REMARKS	ORDERED	ITEM	CALCULATED WEIGHT FOR THE ABOV ITEM
7															
	1														
10	2		10		DIAPHRAGM					702DM1		LOOSE			
10	3		10		DIAPHRAGM					702DM4		LOOSE			
	4		10	CH	15 33.9	9	1⅛				DM1		M 40-6¼	M1053	703/12
	5		10	CH	15 33.9	9	2⅛				DM4		M 40-6¼	M1053	703/11
	6														
10	7		10		DIAPHRAGM					702DM2		LOOSE			
	8		10	CH	18 42.7	9	2⅛						M 40-6¼	M1060	703/14
	9														
	10														
10	11		10		DIAPHRAGM					702DM3	11'	LOOSE			
	12		10	CH	18 42.7	10	10						M 55-2	M1060	703/15
	13														
	14														
10	15		10		DIAPHRAGM					702DM5	11'	LOOSE			
	16		10	CH	15 40	10	9⅝						M 54-5¼	M1021	703/13
	17														
	18														
	19														
	20														
	21														
	22														
	23														
	24														
	25														
	26														
	27														
	28														
	29														
	30														
	31														
	32														
	33														
	34														
	35														
	36														
	37														
	38														
	39														
	40														
	41														
	42														
	43														
	44														
	45														
	46														
	47														
	48														
	49														
	50														
	51														
	52														
	53														
	54														
	55														
	56														
	57														
	58														
	59														
	60														
	61														
	62														

K2828

MATERIAL: ASTM A441 Mod. (Cor-ten "B").
STRUTS: None
OPEN HOLES: 13/16 18/16
WELDING: None

PAINT: No
SHOP CONTACT SURFACES: No

MICHIGAN DEPT. OF STATE HIGHWAYS
BRIDGE X01 OF 82122K
EVERGREEN ROAD OVER I-96
(JEFFRIES FREEWAY)
DETROIT, (WAYNE COUNTY) MICHIGAN

DIAPHRAGMS

American Bridge
Division of United States Steel Corporation

FAB. PLT.	SEQ. CODE
03	55912

BSD	NO CHG.	COST CENTERS PROD.	NON PROD.	PAY MARK CODE
				5K

WEIGHT REV. NO.	EXCEPTION SHIP DIVISION	LINE CONTROL
		10

REVISIONS	
F	
E	
D	
C	
B	
A	

FABRICATION ASSIGNED TO: Gary
DRAWING MADE BY: Gary #2
MADE BY: B.R. DATE: 1/6/69 CHECKED BY: D.Z. DATE: 1-20-69
IN CHARGE OF: ARCHITECTURE - 8850

FOR LOCATION OF SHIPPING PIECES SHOWN ON THIS SHEET REFER TO ERECTION PLANS: E8 & E9

ORDER NO: K2828

SHEET NO.: 702

ADV. 6-LL

D-63XC REV. 9-67

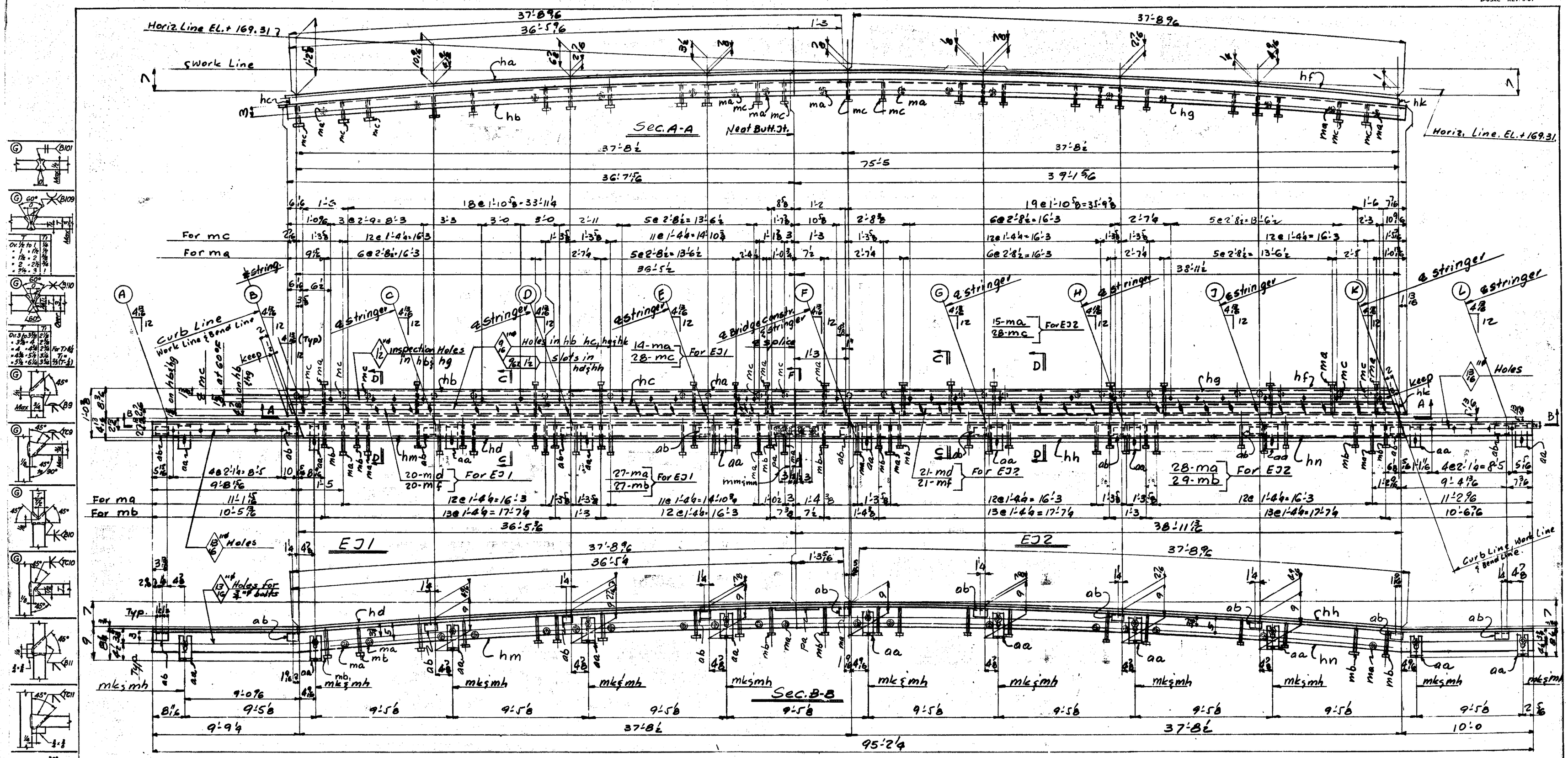

MICHIGAN DEPT. OF STATE HIGHWAYS
BRIDGE X01 OF 82122K
EVERGREEN ROAD OVER I-96
(JEFFRIES FREEWAY)
DETROIT (WAYNE COUNTY) MICHIGAN
EXPANSION JOINT

USS American Bridge
Division of United States Steel Corporation

PUBLICATION ASSIGNED TO Gary
DRAWING MADE BY Gary #2
MADE BY M.Z. DATE 1/22/69 CHECKED BY ALM DATE 3/4/69
IN CHARGE OF Augenstine

ORDER NO. K2828 | SHEET NO. 703AB

REV. NO. 03 | 55913

F	
E	
D	
C	
B	
A	

REVISIONS

ZENITH A & B SMITH PGH. PA M-0000-566

D-81XC REV. 566

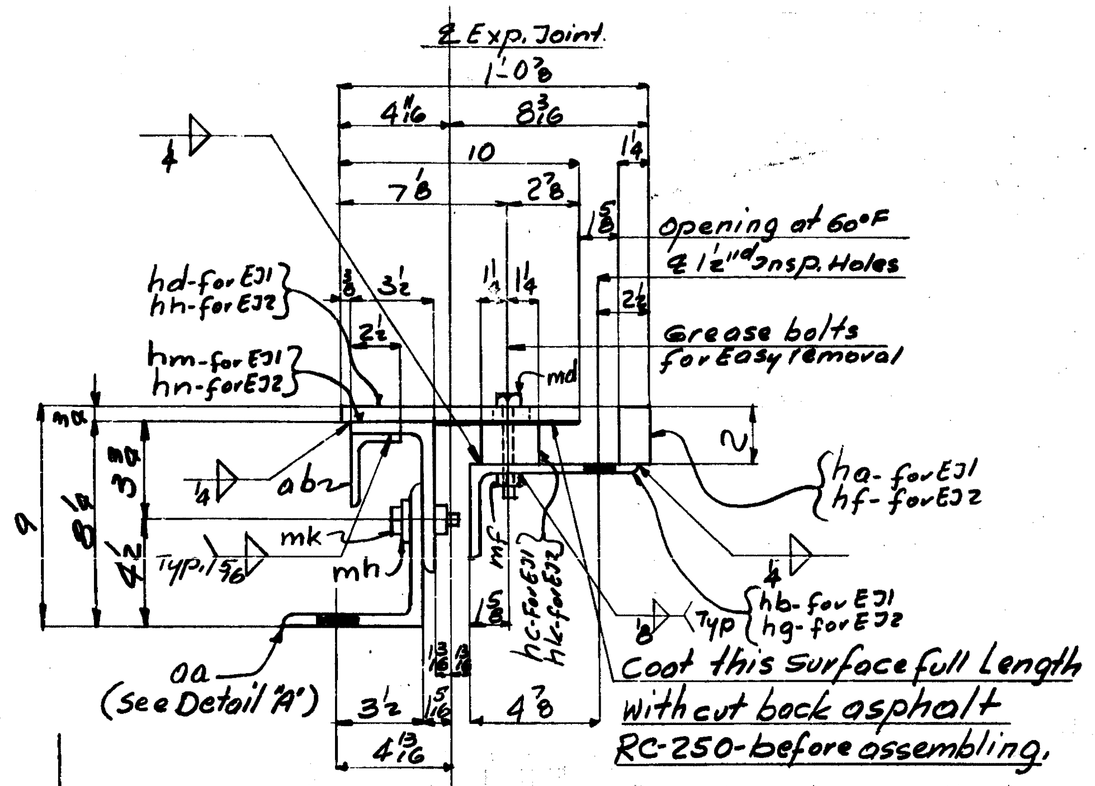

Sec. C-C

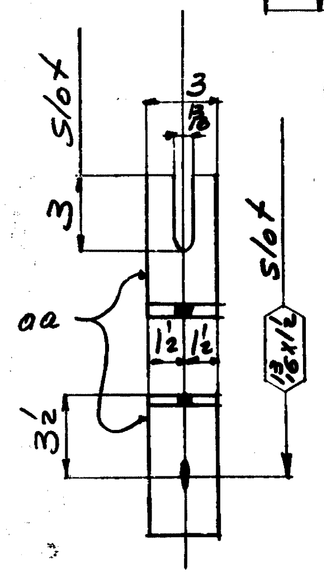

Det. "A"

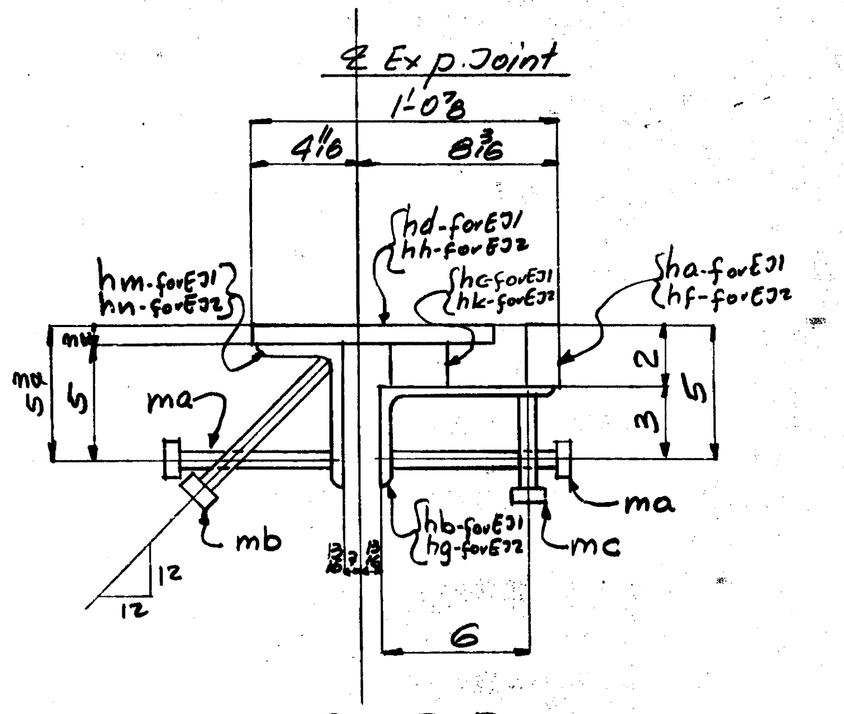

Sec. D-D

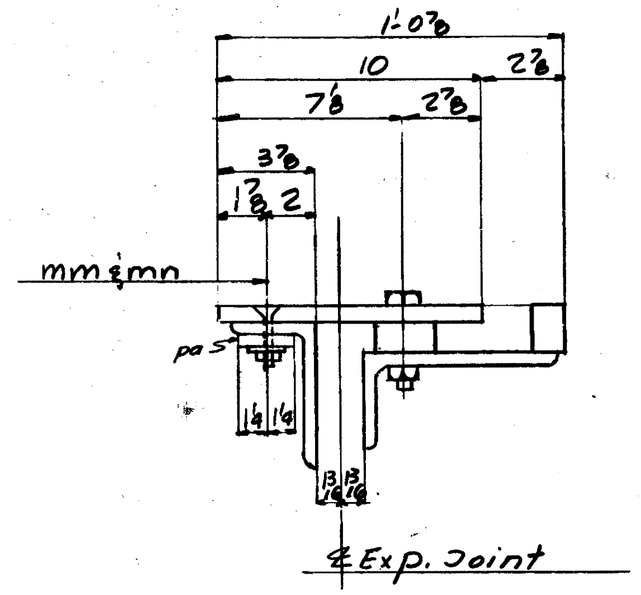

Sec. F-F

Gen. Notes:-

Spec:- Mich. State Hwy. Specs. 1967 For Road & Bridge Constr. & Special Provisions

Material:- ASTM-A441 Modified Cor-Ten "B" U.N.

Rivets:- None

Open Holes:- As Noted

Welding:- Yes AWS. Spec. for welded Hwy. & Railway Bridges "Use E70XX Low Hydrogen Electrodes or F71-XXXXX or F72-XXXXX flux and Electrode Combinations"

Paint:- None

Shop Contact Surfaces:- No.

All steel shall be handled carefully and shall be kept free and clean of all foreign materials such as grease, oil, chalk marks, crayon marks, dirt, etc.

All shipping marks shall be made using a steel die.

The rounding of corners will not be required.

LINE NO.	TOTAL NO. OF PCS. ON ORDER	MATERIAL: NO. OF PCS. ON SKETCH	ASSBY. DESC.	DIMENSIONS	LENGTH FEET	LENGTH INCH	FINISH AND TRIM DESC.	FINISH AND TRIM INCH	SHIPPING OR ASSEMBLING MARK	SHIPPING SPECIFICATIONS OR ASSEMBLING REFERENCE	REMARKS	ORDERED	ITEM	CALCULATED WEIGHT FOR ONE SHIP PIECE
1														
2		1		EXPANSION JOINT					703EJ1					
3														
4		1	FLT	2 1/4	36	8 3/8	BEVD		ha			2X 3/4-10	M019	700/11
5		1	L	7 4 3/8	36	10 3/8	BEVD		hb			3/4-1 3/4	M1040	700/1
6		1	FLT	2 1/2 1/4	36	7 7/8	BEVD		hc			3/4-1 1/4	M1024	700/9
7		1	PL	10 3/4	36	7 1/8	BEVD		hd			3/4 & 3/4-1 3/4	M1032	700/7
8		1	L	6 3 1/2	2	6 2 1/2	BEVD		hm			4 1/2-4 3/4	M1032	700/3
9	11	5	L	6 6 1/2		3			aa			40-0	M1024	111/28
10	11	5	L	3 2 1/2 3/8		3			ab			1/16	3/4	111/23
11	214	91	M	3/4 NOTSOF 32 wd		7			ma		3rd. 3 X 3/8 X 3/8 X 30-0 Type 4A Std.	3-57466.5		M102/19
12	56	27	M	3/4 NOTSOF 32 wd		8			mb		Type 4A Std.	3-57466.5		M102/17
13	56	28	M	3/4 NOTSOF 32 wd		4			mc		Type 4A Std.	3-57466.5		M102/11
14	41	20	M	1/2 Bolts		3 1/2			md		3 1/2 Sq.	3-54005		M1047
15	41	20	M	5/8 NUTS	1/2	7 1/8			mf		A307	3-54005		M102/7
16	11	5	PB	3/4 HHN.		2 1/4			mk		A307	5	S	M102/3
17	11	5	WASH	2 1/4	1/8	1 1/8			mh		A36	5	S	M102/5
18		1	FLT	2 1/2	1/2	10			pa			3/4-10-0	M1039	111/22
19		2	M	3/4 x 2 1/2 SK-HSB							Equal to	3-57466		M102/2
~~20~~				HEX NUTS		3			mm		Cortenb			M102/10
21		2	M	1 1/8 x 1 3/4 Lk.							Corr.	5	S	
~~22~~				1 3/8 Hole					mn		Resist.			
23														
24														
25														
26		1		EXPANSION JOINT					703EJ2					
27														
28		1	FLT	2 1/4	38	8 3/8	BEVD		hf			2X 3/4-10	M1024	700/10
29		1	L	7 4 3/8	39	11 1/8	BEVD		hg			3/4-1 3/4	M1040	700/4
30		1	PL	10 3/4	39	11 1/2	BEVD		hh			3/4 & 3/4-1 3/4	M1032	700/6
31		1	FLT	2 1/2 1/4	38	11 1/8	BEVD		hk			3/4 & 3/4-1 3/4	M1032	700/8
32		1	L	6 3 1/2 1/4	48	11 7/8	BEVD		hn			48-0 1/4	M1032	700/2
33		6	L						aa					
34		6	L						ab					
35		43	M						ma					
36		29	M						mb					
37		28	M						mc					
38		21	M						md					
39		21	M						mf					
40		6	PB						mk					
41		6	WASH						mh					
42														
43														
44														
45														
46		20		Support Bars					703M1					
47		20	FLT	2 3/8	1	0					Plate 703 Sketch		IS	
48														
49														
50														
51														
52														
53														
54														
55														
56														
57														
58														
59														
60														
61														
62														

K-2828

MICHIGAN DEPT. OF STATE HIGHWAYS
BRIDGE X01 OF 82122K
EVERGREEN ROAD OVER I-96
(JEFFRIES FREEWAY)
DETROIT, (WAYNE COUNTY) MICHIGAN

Expansion Joint

USS American Bridge
Division of United States Steel Corporation

FABRICATION ASSIGNED TO: Gary

DRAWING MADE BY: Gary & Z

MADE BY: M.Z. DATE: 1/23/63 CHECKED BY: ALM DATE: 3/4/63

IN CHARGE OF: Augenstine

ORDER NO. K2828

SHEET NO. 703B

FAB. PLT. 03 | SEQ. CODE 559 13

BASED ON	NO. OF CHGS.	COST CENTERS PROD.	NON PROD.	PAY BASIS CODE
				5%

WEIGHT REV. NO. | EXCEPTION SHOP DIVISION | LINE CONTROL 35

F	
E	
D	
C	
B	
A	

REVISIONS

FOR LOCATION OF SHIPPING PIECES SHOWN ON THIS SHEET REFER TO ERECTION PLANS E8

ADV. BILL

SMITH A & B SMITH PGH. PA. M-080-566

D-81XC REV. 566

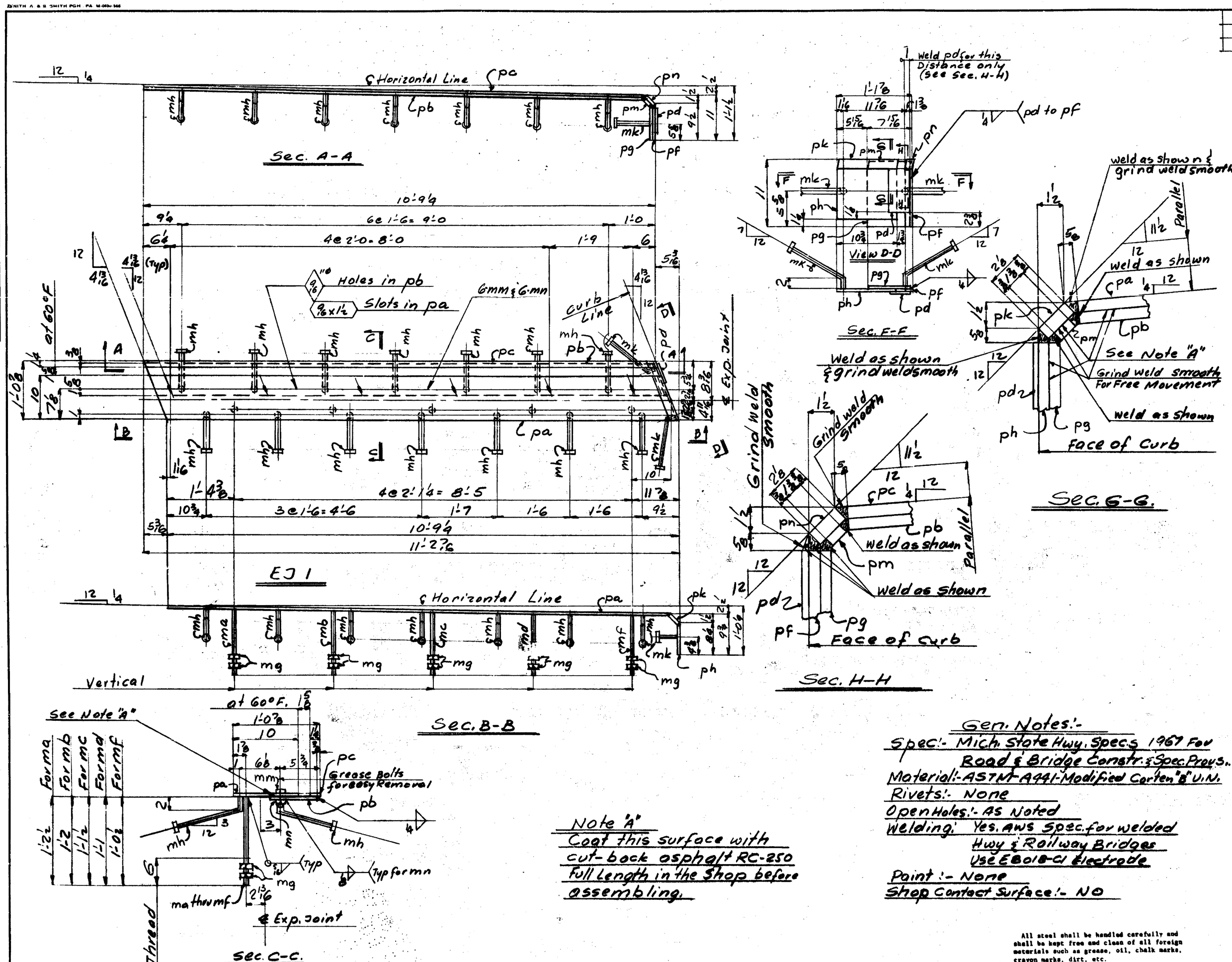

Note "A"
Coat this surface with cut-back asphalt RC-250 Full Length in the Shop before assembling.

Gen. Notes:-
Spec:- Mich. State Hwy. Specs 1967 For Road & Bridge Constr. & Spec. Provs.
Material:- AST M-A441-Modified Corten "B" U.N.
Rivets:- None
Open Holes:- As Noted
Welding:- Yes. AWS Spec. for welded Hwy & Railway Bridges Use E8018-C1 Electrode
Paint:- None
Shop Contact Surface:- NO

All steel shall be handled carefully and shall be kept free and clean of all foreign materials such as grease, oil, chalk marks, crayon marks, dirt, etc.
All shipping marks shall be made using a steel die.
The rounding of corners will not be required.

LINE NO.	TOTAL NO. OF PCS. TO BE ORDERED	NO. OF PCS. ON SKETCH	ABBRV. DESC.	MATERIAL DIMENSIONS	LENGTH FEET	LENGTH INCH	FINISH AND TRIM DESC.	FINISH AND TRIM INCH	SHIPPING OR ASSEMBLING MARK	SHIPPING SPECIFICATIONS OR ASSEMBLING REFERENCE	REMARKS	ORDERED	ITEM	CALCULATED WEIGHT FOR ONE SHIP PIECE
1														
2		1		EXPANSION JOINT					704EJ1					
3														
4		1	PL	10 1/2	10	11			pa			44-3 49X 30.0	M103	704/15
5		1	FLT	7 1/2	10	9 1/2			pb				M103	704/21
6		1	FLT	1/4 1/2	10	7 1/2			pc				M103	704/18
7		1	FLT	4 1/2 1/4		6 1/2			pd			48X 8'-0	SW 3	704/12
8		1	FLT	1 3/8 1/2		8 3/8			pf				M103	704/20
9		1	FLT	7 1/8 1/2		8 1/8			pg				M103	704/19
10		1	PL	10 3/4 1/2		7 1/8			ph				M103	704/13
11		1	FLT	2 1/8 11/16		11 3/8			pk		FW 3/4" ⊥		TS	
12		1	FLT	1 3/8 1/2		8			pm				M103	704/16
13		1	FLT	2 1/8 11/16		2			pn		FW 3/4" ⊥	MACH SHOP	TS	
14		1	RD	3/4	1	2 1/2			ma		A36			
15		1	RD	3/4	1	2			mb		A36			
16		1	RD	3/4	1	1 1/2			mc		A36			
17		1	RD	3/4	1	1			md		A36			
18		1	RD	3/4	1	0 1/2			mf		A36			
19		10	M	Std. Sq. Hd. - 3/4" Tap					mg		A307			
20		14	M	3/4" Nelson Stud BEND										
21				Type Hd.		11			mh		Std.	3/4" x 6.5		M103/12
22		2	M	3/4" Nelson Stud BEND										
23				Type Hd.	1	2			mk		Std.	3/4" x 6.5		M103/13
24		6	M	1/2" Bolts		2			mm		A307	1/2" x 4.75		M102/12
25		6	M	Sq. Hd. - 1/2" Tap					mn		Sq. Hd. A307	1/2" x 3.5		M102/12
26														
27														
28														
29														
30														
31														
32														
33														
34														
35														
36														
37														
38														
39														
40														
41														
42														
43														
44														
45														
46														
47														
48														
49														
50														
51														
52														
53														
54														
55														
56														
57														
58														
59														
60														
61														
62														

K-2828

MICHIGAN DEPT. OF STATE HIGHWAYS
BRIDGE X01 OF 82122K
EVERGREEN ROAD OVER I-96
(JEFFRIES FREEWAY)
DETROIT (WAYNE COUNTY) MICHIGAN

EXPANSION JOINT

USS American Bridge
Division of United States Steel Corporation

FAB. PLT. 03 SEQ. CODE 55914
COST CENTERS: BSD, NCHG, "B", WOOD, NON PROF.
PAY BASIS CODE 56
WEIGHT REV. NO. | EXCEPTION SHIP DIVISION | LINE CONTROL 27

REVISIONS: F, E, D, C, B, A

FABRICATION ASSIGNED TO Gary
DRAWING MADE BY Gary #2
MADE BY M.Z. DATE 1/26/63 CHECKED BY ALN DATE 2/6/63
IN CHARGE OF Augenstine

FOR LOCATION OF SHIPPING PIECES SHOWN ON THIS SHEET REFER TO ERECTION PLANS E8

ORDER NO. K2828 | SHEET NO. 704

ADV BILL

ZENITH A. & P. SMITH PGH., PA 16-0930-966

D-81XC REV. 566

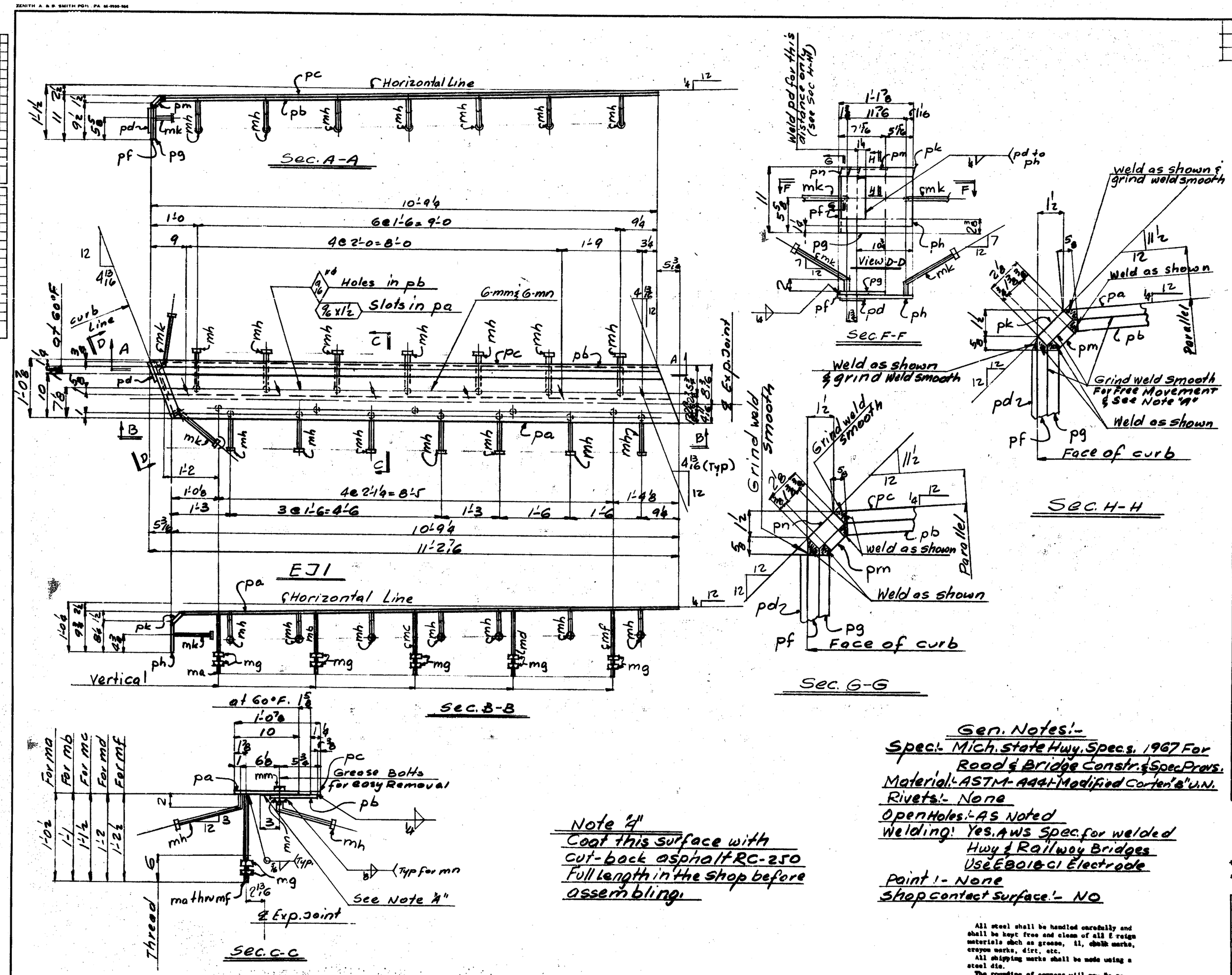

Note "A"
Coat this surface with cut-back asphalt RC-250 Full length in the shop before assembling.

Gen. Notes:-
Spec:- Mich. State Hwy. Specs. 1967 For Road & Bridge Constr. & Spec Provs.
Material:- ASTM-A441-Modified Corten "B" U.N.
Rivets:- None
Open Holes:- As Noted
Welding: Yes. AWS Spec. for welded Hwy & Railway Bridges
Use E6018-C1 Electrode
Paint:- None
Shop contact surface:- NO

All steel shall be handled carefully and shall be kept free and clean of all foreign materials such as grease, oil, chalk marks, crayon marks, dirt, etc.
All shipping marks shall be made using a steel die.
The rounding of corners will not be required.

LINE NO.	TOTAL NO. OF PCS. ON SHEET	NO. OF PCS. ON SKETCH	MARK/DESC.	MATERIAL DIMENSIONS	LENGTH FEET	LENGTH INCH	FINISH AND TRIM DESC.	FINISH AND TRIM INCH	SHIPPING OR ASSEMBLING MARK	SHIPPING SPECIFICATIONS OR ASSEMBLING REFERENCE	REMARKS	ORDERED	ITEM	CALCULATED WEIGHT FOR ONE SHIP PIECE
1														
2		1		EXPANSION JOINT					705EJ1					
3														
4		1	PL	10 × 1/2	10	11			pa			10 × 1/2 × 9'-0	79071	
5		1	FLT	7 × 1/2	10	9 5/8			pb			7 × 1/2 × 9'-0	79071	
6		1	FLT	1 1/4 × 1/2	10	7 1/2			pc				79071	
7		1	FLT	4 1/2 × 1/4		6 1/2			pd			4 1/2 × 1/4 × 9'-0	79071	
8		1	FLT	1 3/8 × 1/2		8 1/2			pf				79071	
9		1	FLT	7 1/2 × 1/2		8 1/2			pg				79071	
10		1	PL	10 3/4 × 1/2		7 1/8			ph				79071	
11		1	FLT	2 1/8 × 5/16		11 3/4			pk		FIN 3/4"	1/4		
12		1	FLT	1 3/8 × 1/2		8			pm				79071	
13		1	FLT	2 1/8 × 5/16		2			pn		FIN 3/4"	1/4		
14		1	RD	3/4	1	0 1/2			ma		A36	WITH SHOP		
15		1	RD	3/4	1	1			mb		A36			
16		1	RD	3/4	1	1/2			mc		A36			
17		1	RD	3/4	1	2			md		A36			
18		1	RD	3/4	1	2 1/2			mf		A36			
19		10	M	Std. Sq. Nut 3/4" Tap					mg		A307			
20		14	M	3/4" Nelson Stud			BEND							
21				Type H &		11			mh		Std.	3/4" Nelson		
22		2	M	3/4" Nelson Stud			BEND							
23				Type H &	1	2			mk		Std.	3/4" Nelson		
24		6	M	1/4" Bolts		2			mm		A307 Hex. Hd.	1/4"		
25		6	M	Sq. Nut 1/4" Tap					mn		A307	1/4" Nelson		
26														
27														
28														
29														
30														
31														
32														
33														
34														
35														
36														
37														
38														
39														
40														
41														
42														
43														
44														
45														
46														
47														
48														
49														
50														
51														
52														
53														
54														
55														
56														
57														
58														
59														
60														
61														
62														

K-2828

MICHIGAN DEPT. OF STATE HIGHWAYS
BRIDGE X01 OF 82122K
EVERGREEN ROAD OVER I-96
(JEFFRIES FREEWAY)
DETROIT, (WAYNE COUNTY) MICHIGAN

EXPANSION JOINT
American Bridge
Division of United States Steel Corporation

FAB. PLT. C3 | ICO CODE 55915

DISD	NO CHGS R	COST CENTERS PROD.	NON PROD	PAY BASIS CODE
				56

WEIGHT | EXCEPTION REV. NO. | SHIP DIVISION | LINE CONTROL 23

REVISIONS: F, E, D, C, B, A

FOR LOCATION OF SHIPPING PIECES SHOWN ON THIS SHEET REFER TO ERECTION PLANS: E8

ADV. BILL

FABRICATION ASSIGNED TO: Gary
DRAWING MADE BY: Gary #2
MADE BY: M.Z. DATE 1/28/69 CHECKED BY: ALN DATE 3/4/69
IN CHARGE OF: Augenstine

ORDER NO. K2828 | SHEET NO. 705

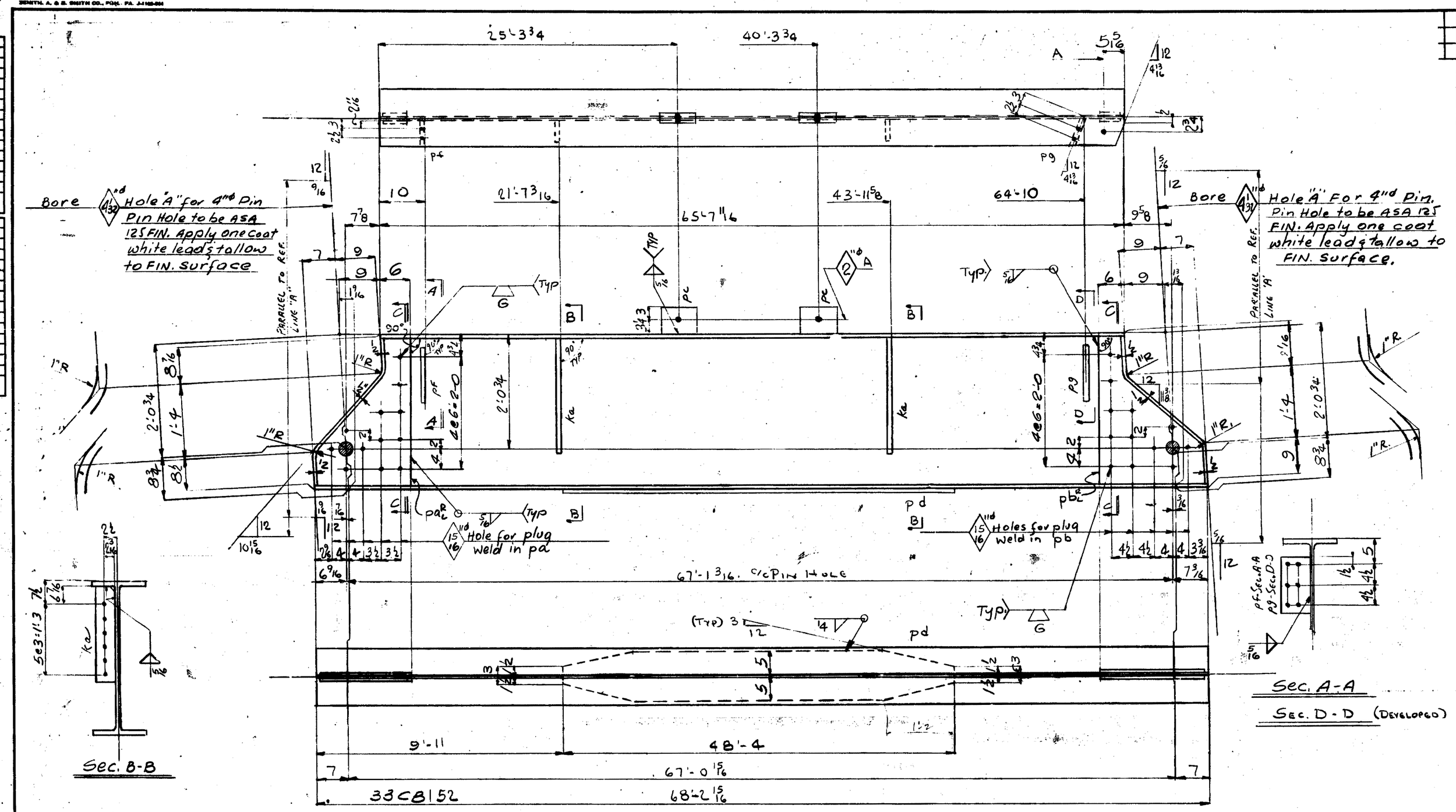

LINE NO.	TOTAL NO. OF PCS. IN THIS ITEM	NO. OF PCS. IN ASSEMBLY	MARK DESIG.	MATERIAL DIMENSIONS	LENGTH FEET	LENGTH INCHES	FINISH AND TYPE DESIG.	FINISH AND TYPE INCHES	SHIPPED IN ASSEMBLING MARK	SHIPPING SPECIFICATIONS OR ASSEMBLING REFERENCE	REMARKS	ORDERED	ITEM	CALCULATED WEIGHT FOR ONE UNIT PIECE
1														
2		1		BEAM					706B1	68'				
3														
4		1	CB	33 152	68	3¾						18-5½ 7028		701/62
5		2	PL	20⅞ 9/16	2	7/8			pat		27-2-7/8 c/c 2	PP/A 55		701/23
6		2	PL	27¾ 9/16	2	7/8			pbt		28-2-7/8 c/c 2	55		A
7		2	FLT	6¼ ½		8			pc		A36		FB	S
8		1	PL	10 ¾	48	4			pd		Cov PL	10 x 48 x ¾	M013	701/03
9		1	FLT	6½ ½	1	0			pf			6½ x 20-0	M010	701/21
10		1	FLT	6½ ½	1	0	2165		pg				M010	
11		2	FLT	5½ ½	1	11¼	T16		ka			16-4	M005	701/19
12														
13														
14														
15														
16														
17														
18														
19														
20														
21														
22														
23														
24														
25														
26														
27														
28														
29														
30														
31														
32														
33														
34														
35														
36														
37														
38														
39														
40														
41														
42														
43														
44														
45														
46														
47														
48														
49														
50														
51														
52														
53														
54														
55														
56														
57														
58														
59														
60														
61														
62														

K2828

Gen. Notes:-
Spec:- Michigan state Specs. 1967-For Road & Bridge Construction & Special Provisions.
Material:- ASTM-A441 Mod [Cor-Ten "B"] U.N
Open Holes:- 1/16" ϕ U.N.
Welding:- AWS & Special Provisions-Use E70XX L.H. Electrodes or F7X-XXXXX or F7Z-XXXXX Flux & Electrode Combination
Paint:- NO
Snips - 1½" x 1½" Typ.
Camber:- Camber is to be measured with the beam lying on its side. Allowable camber tolerance is ± ¼. Heat is to be used if necessary to assure camber permanency.

Open Holes are for High Strength Structural Bolts U.N.to "A"

All steel shall be handled carefully and shall be kept free and clean of all foreign materials such as grease, oil, chalk marks, crayon marks, dirt, etc.

All shipping marks shall be made using a steel die.

The rounding of corners will not be required.

The far side of PL ~~and the near side of~~ including the complete bottom flange, shall be blast cleaned in accordance with Steel Structures Painting Council Surface Preparation Specifications No. 10 Near-White Blast Cleaning". SSPC-SP10-63 as soon after fabrication as possible.

MICHIGAN DEPT. OF STATE HIGHWAYS
BRIDGE X01 OF 82122K
EVERGREEN ROAD OVER I-96
(JEFFRIES FREEWAY)
DETROIT, (WAYNE COUNTY) MICHIGAN

Beam "A" & Span #12

American Bridge Division of United States Usa United States Steel

FAB. PLT. C3 | SEQ. CODE 55916 | COST CENTERS: PROD. / NON PROD. | PAY BASIS CODE

B C D E R | WEIGHT REV. NO. | EXCEPTION SHIP DIVISION | LINE CONTROL 5/16 9

A 4-16-69 D | REVISIONS

FOR LOCATION OF SHIPPING PIECES SHOWN ON THIS SHEET REFER TO ERECTION PLANS. E8

F E D C B

FABRICATION ASSIGNED TO Gary
DRAWING MADE BY Gary #2
MADE BY E DATE 2-6-9 CHECKED BY ALH DATE 3/3/69
IN CHARGE OF Augenstine #5559

ORDER NO. K2828 | SHEET NO. 706

ADV. BILL 701

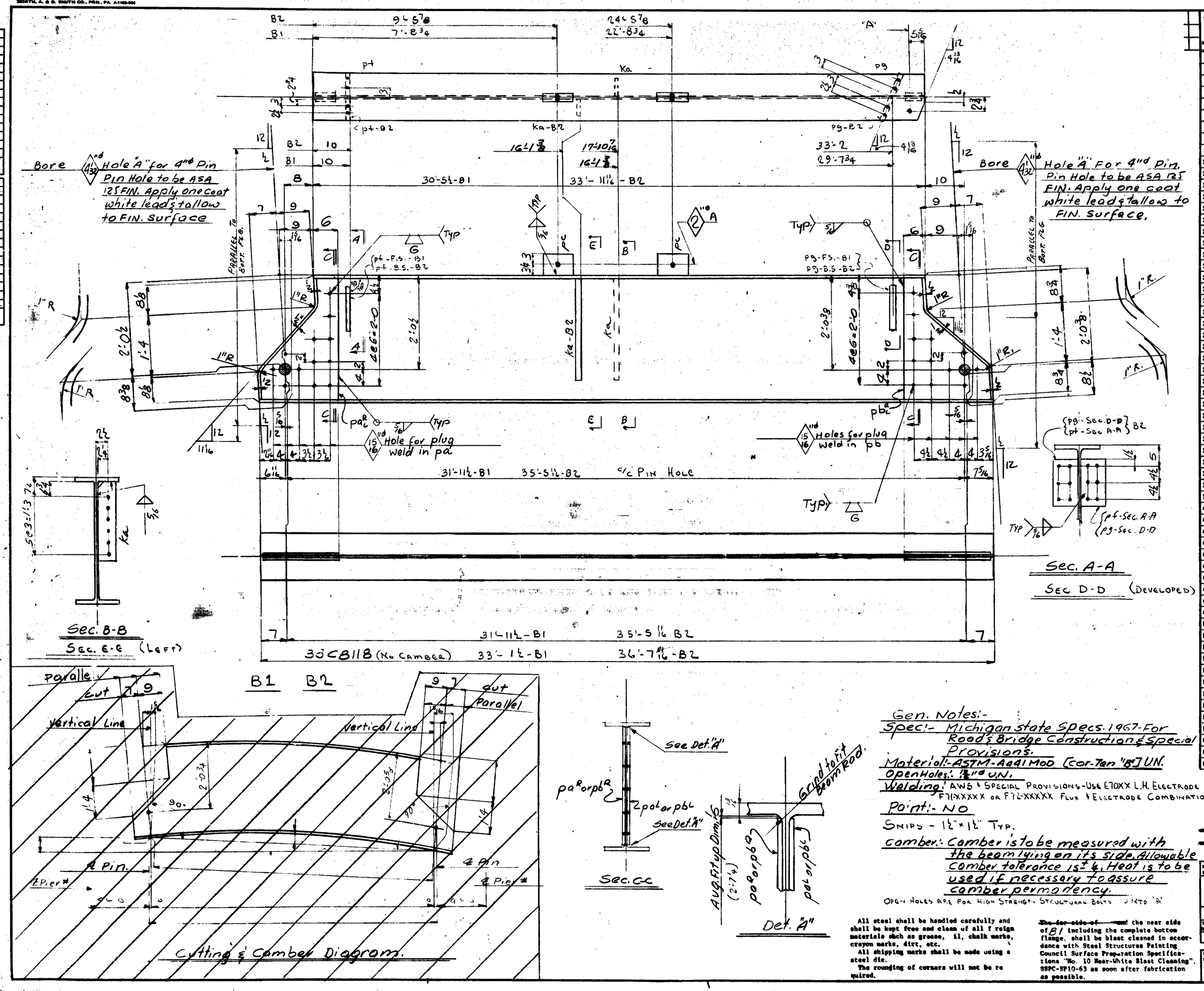

LINE NO.	TYPICAL NO. OF PCS. ON SECTION	NO. OF PCS. ON SECTION	MARK	MATERIAL: QUANTITY DESIG.	DIMENSIONS	LENGTH FEET	LENGTH INCH	FINISH AND TREAT DESIG.	FINISH AND TREAT INCH	SHIPPING OR ASSEMBLING MARK	SHIPPING SPECIFICATIONS OR ASSEMBLING REFERENCE	REMARKS	ORDERED	ITEM	CALCULATED WEIGHT (FOR ONE SHIP PIECE)
1															
2		1		BEAM						707B1	33'				
3															
4		1	CB	33	118	33	1⅞						33-1⅞	7005	701/18
5	2	2	PL	10 7/16	½	2	7⅞			pa		27-2⅞ / 6-1½	30-0	7013	701/20
6	2	2	PL	22 11/16	½	2	7⅞			pb		24-1 / 5-0½		7013	
7	4	2	FLT	6½	½		8			pc		A36		TS	5
8	3	1	FLT	6½	½	1	0			pf			20-9	7018	701/21
9	3	1	FLT	6½	½	1	0	BIED		pg				7010	
10	3	1	FLT	3½	½	1	11⅛	TIE		Ka			11-4	7005	701/19
11															
12															
13															
14															
15		1		BEAM						707B2	37'				
16															
17		1	CB	33	118	36	8						36-9	7003	701/17
18		2	PL							pa					701/20
19		2	PL							pb					
20		2	FLT							pc					5
21		2	FLT							pf					701/21
22		2	FLT							pg					
23		2	FLT							Ka					701/19
24															
25															
26															
27															
28															
29															
30															
31															
32															
33															
34															
35															
36															
37															
38															
39															
40															
41															
42															
43															
44															
45															
46															
47															
48															
49															
50															
51															
52															
53															
54															
55															
56															
57															
58															
59															
60															
61															
62															

K282B

Gen. Notes:-
Spec:- Michigan State Specs. 1967-For Road & Bridge Construction & Special Provisions.
Material:- ASTM-A441 MOD (Cor-Ten "B") U.N.
Open Holes:- 13/16" ϕ U.N.
Welding:- AWS & Special Provisions-Use E70XX L.H. Electrode or F7(XXXXX or F7Z-XXXXX Flux & Electrode Combination.
Paint:- NO
Snips - 1½"×1½" Typ.
Camber:- Camber is to be measured with the beam lying on its side. Allowable camber tolerance is ¼". Heat is to be used if necessary to assure camber permanency.

Open Holes are for High Strength Structural Bolts U.N.T.D. "A"

All steel shall be handled carefully and shall be kept free and clean of all f reign materials such as grease, oil, chalk marks, crayon marks, dirt, etc.
All shipping marks shall be made using a steel die.
The rounding of corners will not be required.

~~The far side of~~ the near side of B1 including the complete bottom flange, shall be blast cleaned in accordance with Steel Structures Painting Council Surface Preparation Specifications "No. 10 Near-White Blast Cleaning". SSPC-SP10-63 as soon after fabrication as possible.

MICHIGAN DEPT. OF STATE HIGHWAYS
BRIDGE X01 OF 82122K
EVERGREEN ROAD OVER I-96
(JEFFRIES FREEWAY)
DETROIT, (WAYNE COUNTY) MICHIGAN

Beam "L" & Span #12

American Bridge Division of United States Steel

FAB. PLT. 03 SEQ. CODE 59 17
COST CENTERS: PROD. / NON PROD. / PAY BASIS CODE
WEIGHT / EXCEPTION / LINE CONTROL
REV. NO. / SHOP DIVISION
REVISIONS

FABRICATION ARRANGED TO: Gary
DRAWING MADE BY: Gary #2
MADE BY: J DATE 2-69 CHECKED BY: AH DATE 3/4/69
IN CHARGE OF: Augenstine F5539

FOR LOCATION OF SHIPPING PIECES SHOWN ON THIS SHEET REFER TO ERECTION PLANS: E3

ORDER NO. K282B
SHEET NO. 707

ADV. BILL 701

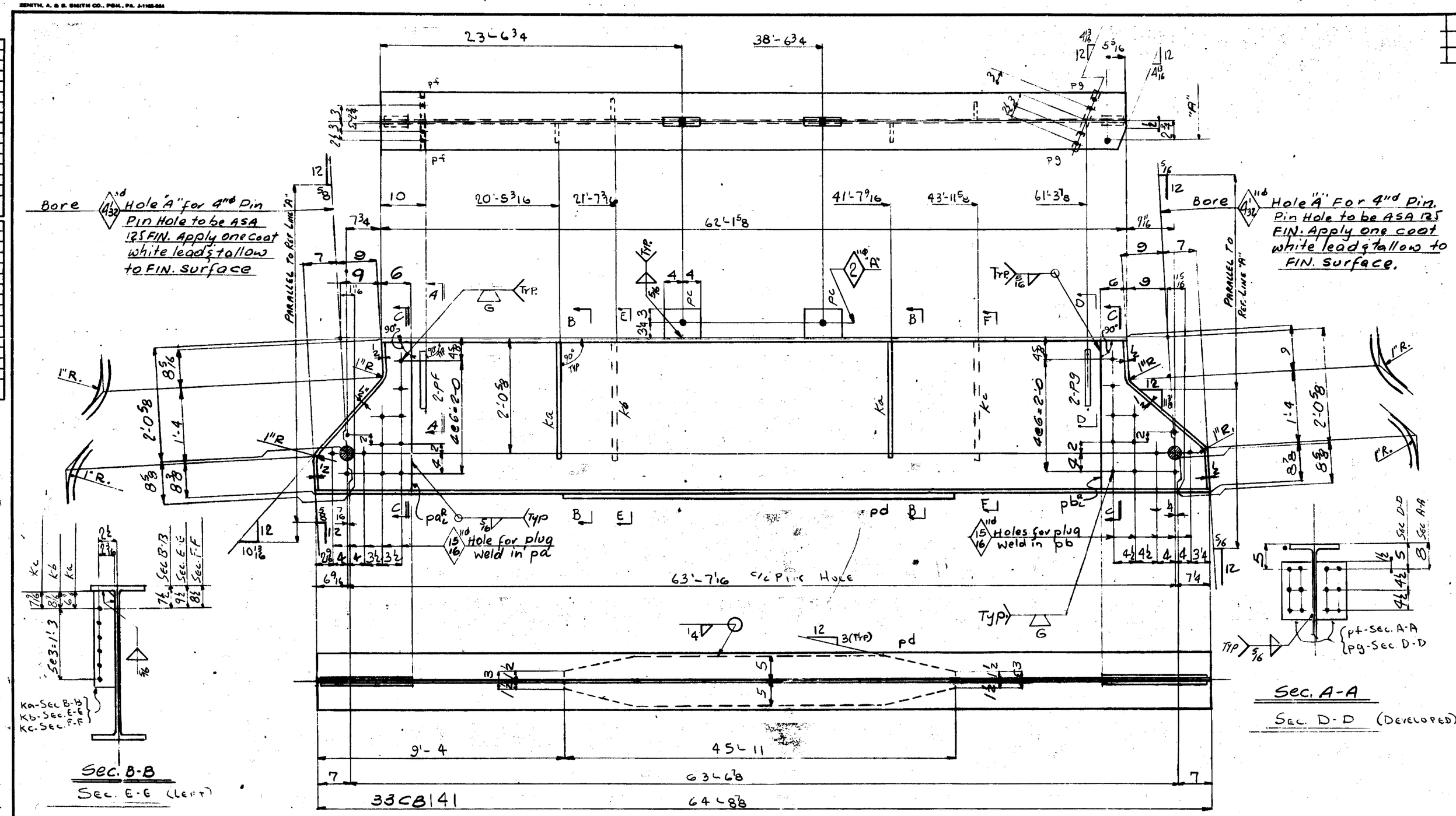

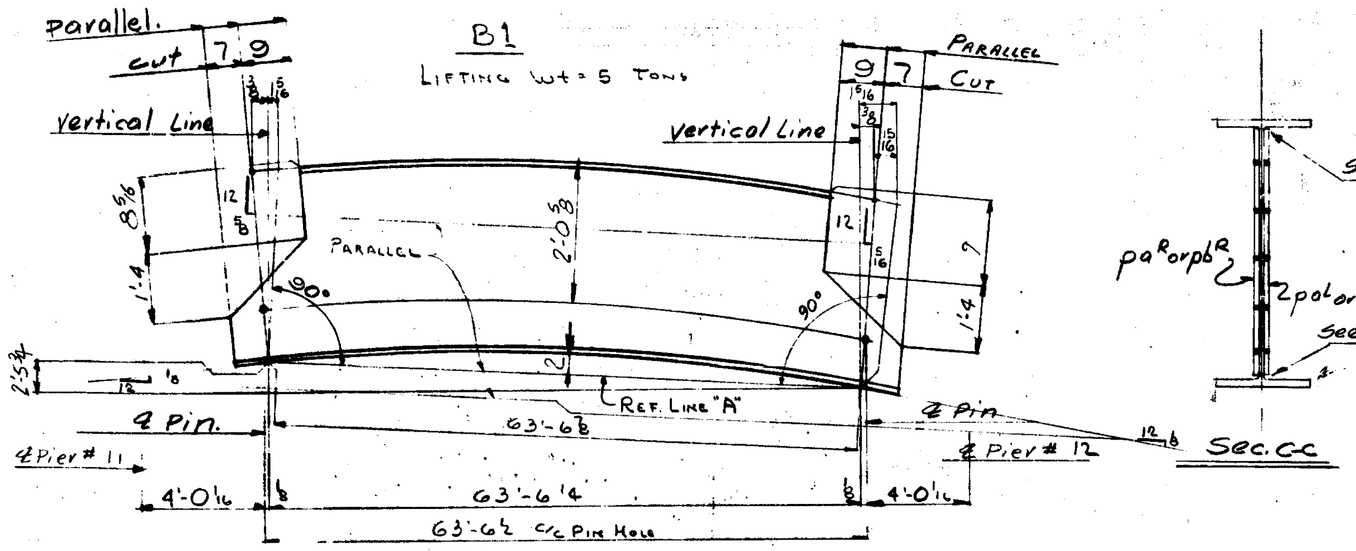

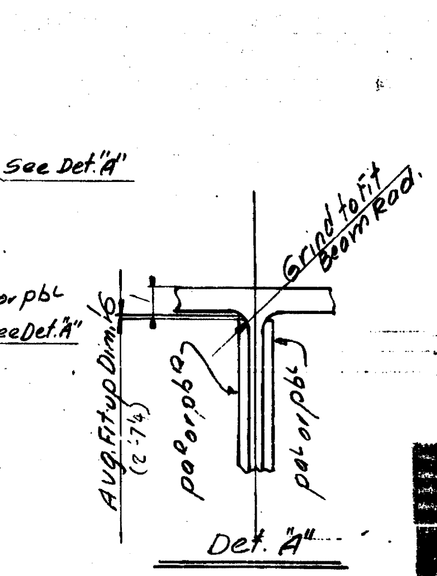

Gen. Notes:-
Spec:- Michigan state Specs. 1967-For Road & Bridge Construction & Special Provisions.
Material:- ASTM-A441 Mod [Cor-Ten "B"] U.N.
Open Holes:- 1/2" ϕ U.N.
Welding:- AWS & Special Provisions
"USE E70XX LOW HYDROGEN ELECTRODES OR F71-XXXXX OR F72XXXXX FLUX AND ELECTRODE COMBINATIONS."
OPEN HOLES - ARE FOR HIGH STRENGTH STRUCTURAL BOLTS U.N. "A"
PAINT - NO
SNIPS - 1/2" x 1/2" TYP

CAMBER NOTE: CAMBER IS TO BE MEASURED WITH [illegible] LYING ON ITS SIDE. ALLOWABLE CAMBER [illegible] IS +1/4". HEAT IS TO BE USED, IF [illegible], TO ASSURE CAMBER PERMANENCY WITHIN [illegible] TOLERANCE.

[illegible] shall be handled carefully and [illegible] free of all foreign [illegible] and shipping.

LINE NO.	TOTAL NO. OF PCS. ON BILL	NO. OF PCS. OR SHEETS	ASSM'D. PCS.	MATERIAL DIMENSIONS			LENGTH FEET	LENGTH INCH	FINISH AND TRIM RECD.	FINISH AND TRIM INCH	SHIPPING OR ASSEMBLING MARK	SHIPPING SPECIFICATIONS OR ASSEMBLING REFERENCE	REMARKS	ORDERED	ITEM	CALCULATED WEIGHT FOR ONE SHIP PIECE
1																
2		1		BEAM							708B1	65'				
3																
4		1	CB	33	141		64	9 3/4						14-115	7019	701/04
5		2	PL	20	3/16		2	7 1/4			pa R		23 23 1/2 23 1/2	22-8	23 23	701/23
6		2	PL	22 1/2	3/16		2	7 1/4			pb R		23 23 1/2 23 1/2		23 23	A
7		2	FLT	6 1/4	1/2			8			pc		A36		7.9	
8		1	PL	10	5/8		45	11			pd		Cor. R	10X 45-11	70070	701/05
9		2	FLT	6 1/2	1/2		1	0			pf			20-0	70010	701/21
10		2	FLT	6 1/2	1/2		1	0	BILGE		pg				70010	
11		2	FLT	3 1/2	1/2		1	11	TIE		Ka			16-4	70005	701/26
12		1	FLT	3 1/2	1/2		2	1	TIE		Kb				70005	
13		1	FLT	3 1/2	1/2		2	0	TIE		Kc				70008	
14																
15																
16																
17																
18																
19																
20																
21																
22																
23																
24																
25																
26																
27																
28																
29																
30																
31																
32																
33																
34																
35																
36																
37																
38																
39																
40																
41																
42																
43																
44																
45																
46																
47																
48																
49																
50																
51																
52																
53																
54																
55																
56																
57																
58																
59																
60																
61																
62																
63																

K2828

MICHIGAN DEPT. OF STATE HIGHWAYS
BRIDGE X01 OF 82122K
EVERGREEN ROAD OVER I. 96
(JEFFRIES FREEWAY)
DETROIT, (WAYNE COUNTY) MICHIGAN

Beam 3' & Span # 12

American Bridge Division of United States Steel

FAB. PLT. C3 SEQ. CODE 55918

BOM	TOTAL	COST CENTERS PROD.	NON PROD.	PAY BASIS CODE

WEIGHT | EXCEPTION | LINE
DEV. NO. | SHIP DIVISION | CONTROL

F	
E	
D	
C	
B	
A	4-14-69 D

REVISIONS

FOR LOCATION OF SHIPPING PIECES SHOWN ON THIS SHEET REFER TO ERECTION PLANS. E8

FABRICATION ASSIGNED TO Gary
DRAWING MADE BY Gary #2
MADE BY F DATE 2-69 CHECKED BY AHH DATE 3/4/69
IN CHARGE OF Augenstine # 5559

ORDER NO. K2828 SHEET NO. 708

ADV. BILL 701

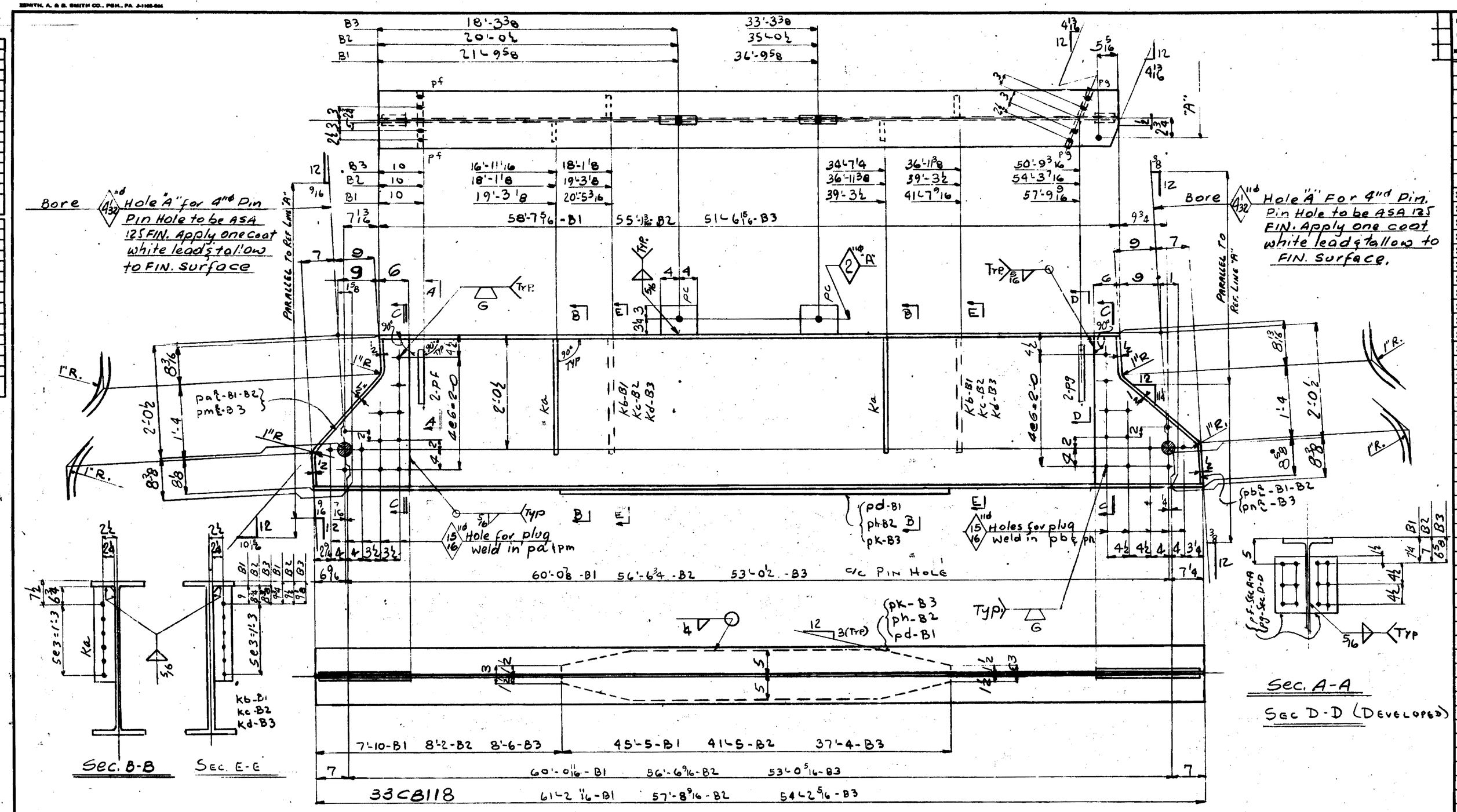

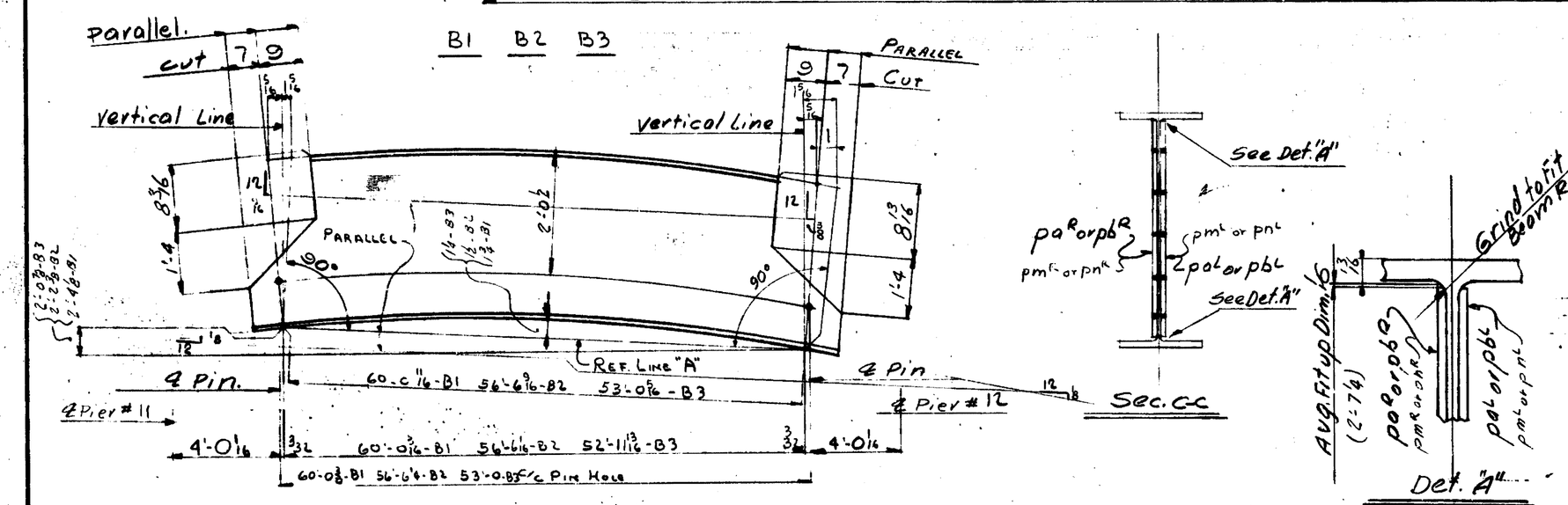

LINE NO.	TOTAL NO. OF PCS. ON SHIP.	NO. OF PCS. ON SHIPPING	ASSYM. SEQ.	MATERIAL DESCRIPTION	DIMENSIONS	LENGTH FEET	LENGTH INCHES	FINISH AND TRIM DESC.	FINISH AND TRIM INCHES	SHIPPING OR ASSEMBLING MARK	SHIPPING SPECIFICATIONS OR ASSEMBLING REFERENCE	REMARKS	ORDERED		CALCULATED WEIGHT FOR ONE SHIP PIECE
1															
2		1		BEAM						709B1	61'				
3															
4		1	CB	33	118	61	3/16						61-5/4	7012	701/06
5	1/2 3/2	2	PL	20	5/8	2	7/16			pa &		28x2-7/16 6x3-1/2	16-3/4x 49-7/8	7013	701/25
6	1/2 3/2	2	PL	23	5/8	2	7/16			pb &		29 1/2 x 2-7/16 6x3-1/2		7013	
7	6	2	FLT	6 1/4	1/2		8			pc		A36		IS	S
8		1	PL	10	3/4	45	5			pd		Cov. PL	10x 46-5	7013	701/07
9	6	2	FLT	6 1/2	1/2	1	0			pf			6x3 22-0	7013	701/21
10	6	2	FLT	6 1/2	1/2	1	0	BIEL		pg				7013	
11	6	2	FLT	3 1/2	1/2	1	11/16	TIE		ka			16-4	7006	701/19
12		2	FLT	3 1/2	1/2	2	1/2	TIE		kb			18-4	7006	701/20
13															
14															
15															
16		1		BEAM						709B2	58'				
17															
18		1	CB	33	118	57	15/16						60-0	7012	701/06
19		2	PL							pa &					701/25
20		2	PL							pb &					
21		2	FLT							pc					S
22		1	PL	10	1/2	41	5			ph		Cov. PL	21 1/2x 41-5	7013	701/09
23		2	FLT							pf					701/21
24		2	FLT							pg					
25		2	FLT							ka					701/19
26		2	FLT	3 1/2	1/2	2	11/16	TIE		kc				7006	701/20
27															
28															
29															
30		1		BEAM						709B3	54'				
31		1	CB	33	118	54	11/16						54-4 3/4	7010	701/10
32		2	PL	10 1/2	1/2	2	7/16			pm &		28x2-7/16 6x3-1/2	16x 50-0	7013	701/24
33		2	PL	23	1/2	2	7/16			pn &		29 1/2 x 2-7/16 6x3-1/2		7013	
34		2	FLT							pe					S
35		1	PL	10	3/8	37	9			pk		Cov. PL	8 1/2x 40-2	7013	701/11
36		2	FLT							pf					701/21
37		2	FLT							pg					
38		2	FLT							ka					701/19
39		2	FLT	3 1/2	1/2	2	1	TIE		kd				7006	701/20
40															
41															
42															
43															
44															
45															
46															
47															
48															
49															
50															
51															
52															
53															
54															
55															
56															
57															
58															
59															
60															
61															
62										(K2B2B)					

Gen. Notes:-
Spec:- Michigan state Specs. 1967-For Road & Bridge Construction & Special Provisions.
Material:- ASTM-A441 MOD (Cor-Ten "B") U.N.
Open Holes:- 1/32 U.N.
Welding:- AWS & Special Provisions
"USE E70XX LOW HYDROGEN ELECTRODES OR F71-XXXXX OR F72XXXXX FLUX AND ELECTRODE COMBINATIONS."
OPEN HOLES - ARE FOR HIGH STRENGTH STRUCTURAL BOLTS U.N. "A"
PRINT - NO
SHIPS - 12"x12" TYP

NOTE: CAMBER IS TO BE MEASURED WITH BEAM LYING ON ITS SIDE. ALLOWABLE CAMBER TOLERANCE IS ±1/4". HEAT IS TO BE USED, IF NECESSARY, TO ASSURE CAMBER PERMANENCY WITHIN TOLERANCE.

[illegible] shall be handled carefully and [illegible] free and clean of all foreign [illegible] as grease, oil, chalk marks, [illegible] pumps, [illegible]

MICHIGAN DEPT. OF STATE HIGHWAYS
BRIDGE X01 OF B2122X
EVERGREEN ROAD OVER I-96
(JEFFRIES FREEWAY)
DETROIT, (WAYNE COUNTY) MICHIGAN

Beam & Span #12

American Bridge Division of United States Steel

FAB. PLT. 03 | REQ. CODE 55919

BEND	NO. CHRD.	COST CENTERS PROD.	NON PROD.	PAY BASIS CODE
				76
HEIGHT REV. NO.	EXCEPTION SHIP DIVISION		LINE CONTROL	
			56	

REVISIONS: F, E, D, C, B, A

Gary

DRAWING MADE BY Gary #2

MADE BY J. DATE 2-69 CHECKED BY ALH DATE 3/4/69

IN CHARGE OF Augenstine #5559

FOR LOCATION OF SHIPPING PIECES SHOWN ON THIS SHEET REFER TO ERECTION PLAN: E8

ORDER NO. K2B2B

SHEET NO. 709

ADV. BILL 701

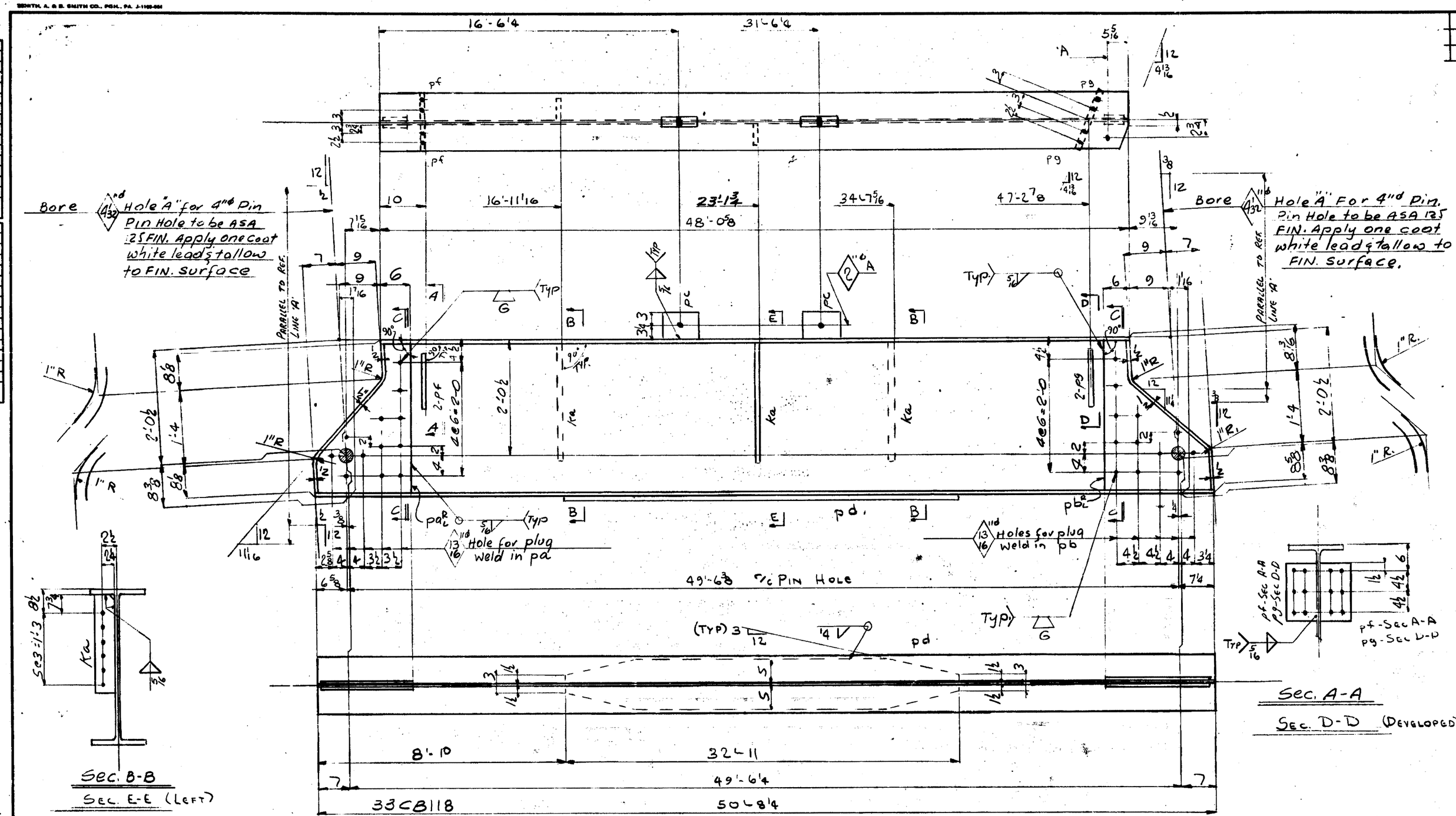

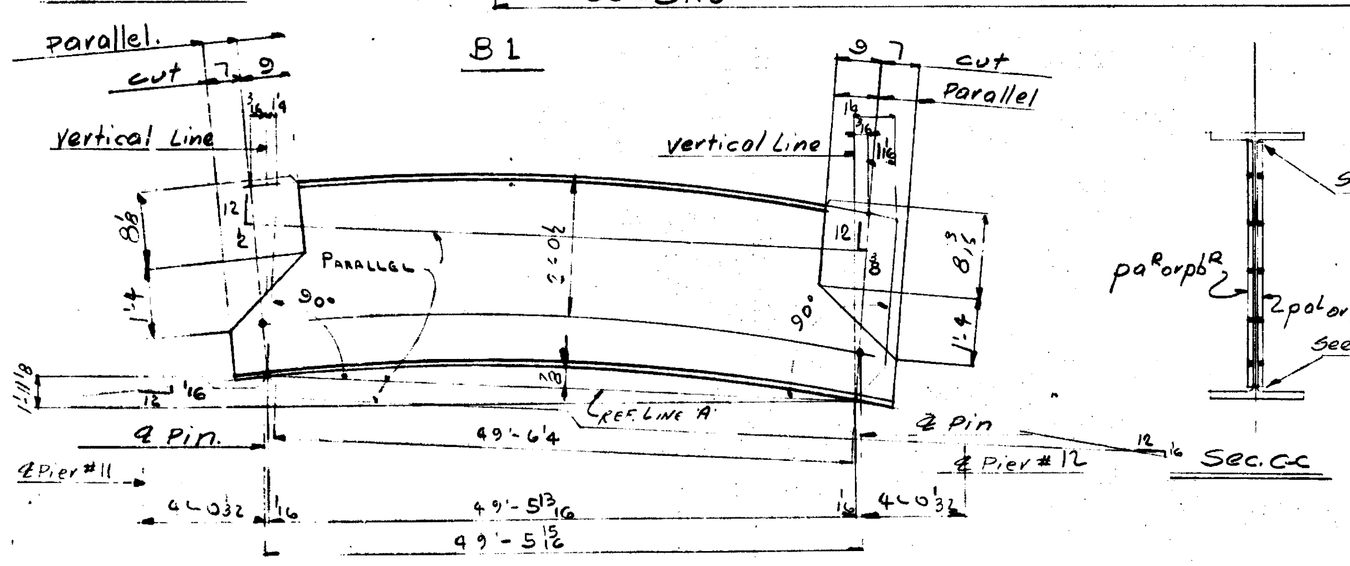

Cutting & Camber Diagram.

Gen. Notes:-

Spec.: Michigan State Specs. 1957-For Road & Bridge Construction & Special Provisions.

Material:- ASTM-A441 Mod [Cor-Ten "B"] U.N.

Open Holes:- 1⅛"d U.N.

Welding:- AWS & Special Provisions-Use E70XX Electrodes or F71-XXXXX or F72-XXXXX Flux & Electrode Combination.

Paint:- NO

Shims - ⅛" x 1½" Typ.

Camber:- Camber is to be measured with the beam lying on its side. Allowable camber tolerance is ±¼. Heat is to be used if necessary to assure camber permanency.

Open Holes are for High Strength Structural Bolts U.N. "A"

All steel shall be handled carefully and shall be kept free and clean of all foreign materials such as grease, oil, chalk marks, crayon marks, dirt, etc.

All shipping marks shall be made using a steel die.

The rounding of corners will not be required.

Line No.	Total No. of Pcs. on Bill	Material: No. of Pcs. on Sheets	Material: Approv. Desc.	Material: Dimensions	Material: Length Feet	Material: Length Inch	Finish and Trim: Desc.	Finish and Trim: Inch	Shipping or Assembling Mark	Shipping Specifications or Assembling Reference	Remarks	Ordered	Item	Calculated Weight for One Ship Piece
1														
2		1		BEAM					710B1	51'				
3														
4		1	CB	33 1/8	50	8⅜						50-10	7008	701/12
5		2	PL	20⅜ ½	2	7⅛			pa		27-2-7½ 20-2-2	42-7⅛ 42-7⅛	7008	701/22
6		2	PL	22¾ ½	2	7⅛			pb		27½ x 2-7½ 22 x 2		7008	
7		2	FLT	6¼ ½		8			pc		A36		TS	5
8		1	PL	10 3/8	32	11			pd		Cov. 2	8½x 40-8	7008	701/13
9		2	FLT	6½ ½	1	0			pf			8½x 20-0	7008	701/21
10		2	FLT	6½ ½	1	0	BIED		pg				7008	
11		3	FLT	3½ ½	2	0⅛	TIE		ka			12-4	7008	701/20

K2828

MICHIGAN DEPT. OF STATE HIGHWAYS
BRIDGE X01 OF 82122K
EVERGREEN ROAD OVER I-96
(JEFFRIES FREEWAY)
DETROIT, (WAYNE COUNTY) MICHIGAN

Beam F & Span #12

American Bridge Division of United States Steel

Fabrication assigned to: Gary

Drawing made by: Gary #2

Made by: J Date: 2-67 Checked by: ALH Date: 3/4/67

In charge of: Augenstine #5559

Fab. Pt. C3 | No. Code 559 | Bill No. | Cost Centers: Prod. / Non Prod. | Pay Mass Code 5/6 | Weight Rev. No. | Exception Ship Division | Line Control 9

Revisions: F, E, D, C, B, A

For location of shipping pieces shown on this sheet refer to erection plans: E8

Order No. K2828 | Sheet No. 710

Adv. Bill 701

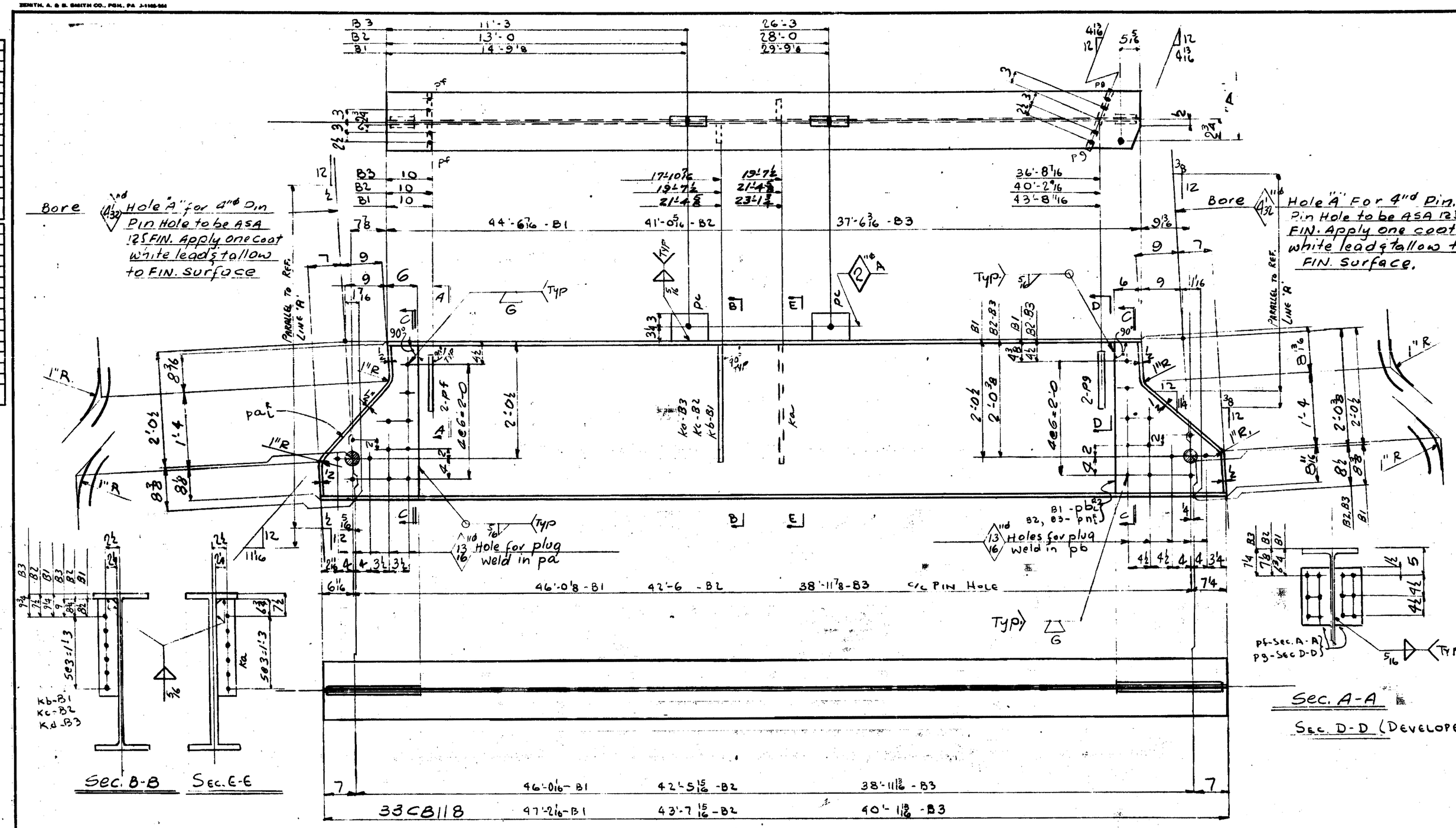

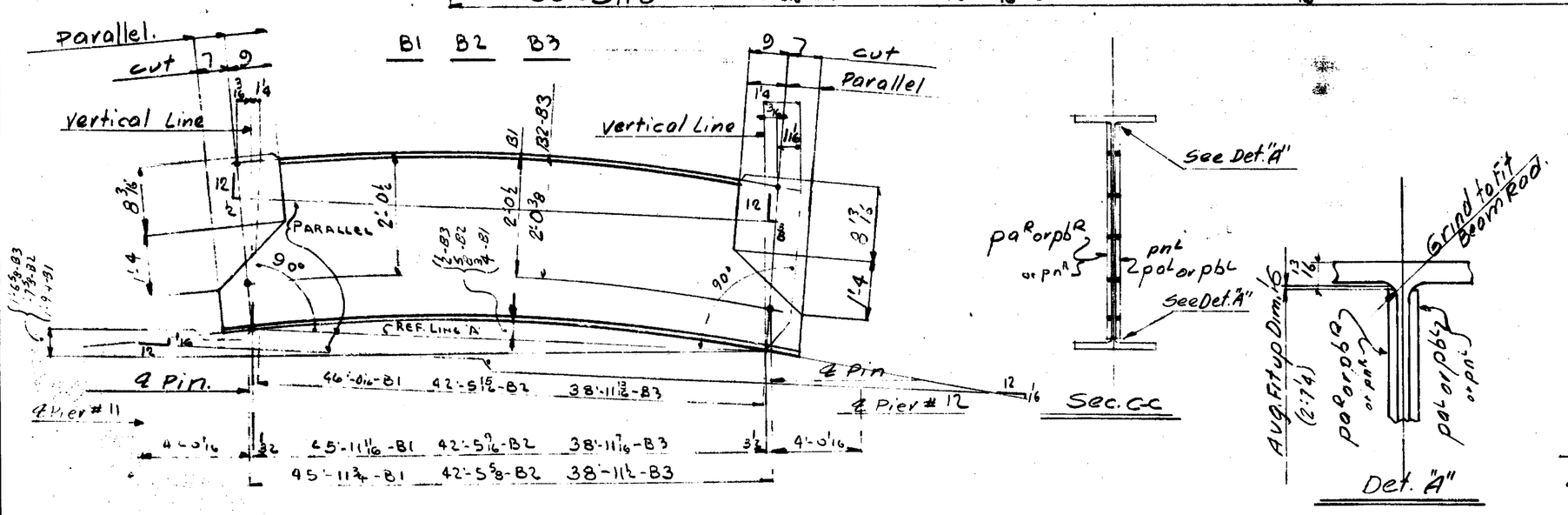

Cutting & Camber Diagram.

Gen. Notes:-

Spec:- Michigan State Specs. 1967-For Road & Bridge Construction & Special Provisions.

Material:- ASTM-A441 MOD [Cor-Ten "B"] U.N.

Open Holes:- 13/16" U.N.

Welding:- AWS & Special Provisions-Use E70XX L.H. Electrodes or F71-XXXXX or F72-XXXXX Flux & Electrode Combination

Paint:- NO

Shims- 1½"x1½" Typ.

Camber:- Camber is to be measured with the beam lying on its side. Allowable camber tolerance is ±¼. Heat is to be used if necessary to assure camber permanency.

Open Holes are for High Strength Structural Bolts U.N. A

All steel shall be handled carefully and shall be kept free and clean of all foreign materials such as grease, oil, chalk marks, crayon marks, dirt, etc.

All shipping marks shall be made using a steel die.

The rounding of corners will not be required.

LINE NO.	TOTAL NO. OF PCS. ON MARK	NO. OF PCS. ON SECTION	MATERIAL: ABBRV. DESC.	DIMENSIONS	LENGTH FEET	LENGTH INCH	FINISH AND TRIM DESC.	FINISH AND TRIM INCH	SHIPPING DE ASSEMBLING MARK	SHIPPING SPECIFICATIONS DE ASSEMBLING REFERENCE	REMARKS	ORDERED	ITEM	CALCULATED WEIGHT FOR ONE SHIP PIECE
1														
2		1		BEAM					711B1	47'				
3														
4		1	CB	33 118	47 2⅝							47-4½	7006	701/14
5	12 34	2	PL	20 1/16 ½	2 7/16				pa R		27-2-7/16	54-4 7/8	99078	701/22
6		2	PL	22¾ ½	2 7/16				pb R		27-2-7/16	54-4 7/8	99078	
7	6	2	FLT	6 1/8 ½	8				pc	A36			TS	S
8	6	2	FLT	6½ ½	1 0				pf			20-0	99010	701/21
9	6	2	FLT	6½ ½	1 0	BIED			pg				99010	
10	3	1	FLT	3½ ½	1 11/16	TIE			ka			16-4	99005	701/19
11		1	FLT	3½ ½	2 1	TIE			Kb			19-4	99006	701/20
12														
13														
14														
15														
16		1		BEAM					711B2	44'				
17														
18		1	CB	33 118	43 8¼							43-10¼	7005	701/15
19		2	PL						pa R					701/22
20	12 34	2	PL	22¾ ½	2 7/16				pb R		27½ + 2-7/16 = 29-9/16	59-4 30-0	99078	
21		2	FLT						pc	A36				S
22		2	FLT						pf					701/21
23		2	FLT						pg					
24		1	FLT						ka					701/19
25		1	FLT	3½ ½	2 1/16	TIE			Kc				99006	701/20
26														
27														
28														
29														
30		1		BEAM					711B3	39'				
31														
32		1	CB	33 118	39 0⅝							40-4½	7004	701/16
33		2	PL						pa R					701/22
34		2	PL						pn R					
35		2	FLT						pc					S
36		2	FLT						pf					701/21
37		2	FLT						pg					
38		1	FLT						ka					701/19
39		1	FLT	3½ ½	2 1½	TIE			Kd				99006	701/20
40														
41														
42														
43														
44														
45														
46														
47														
48														
49														
50														
51														
52														
53														
54														
55														
56														
57														
58														
59														
60														
61														
62														

K2828

MICHIGAN DEPT. OF STATE HIGHWAYS
BRIDGE X01 OF S2828
EVERGREEN ROAD OVER E-96
(JEFFRIES FREEWAY)
DETROIT, (WAYNE COUNTY) MICHIGAN

Beam & Span #12

American Bridge Division of United States Steel

FABRICATION ASSIGNED TO Gary

DRAWING MADE BY Gary #2

MADE BY — DATE 2-69 CHECKED BY ALH DATE 3/6/62

IN CHARGE OF Augenstine #5559

FAB. CO. C3 NO. CODE 559

	NO. CODED	COST CENTERS PROD.	NON PROD.	PAY BASIS CODE
				7

WEIGHT REV. NO. | EXCEPTION SHIP DIVISION | LINE CONTROL 27

REVISIONS: F, E, D, C, B, A

FOR LOCATION OF SHIPPING PIECES SHOWN ON THIS SHEET REFER TO ERECTION PLANS: E8

ORDER NO. K2828

SHEET NO. 711

ADV. BILL 74

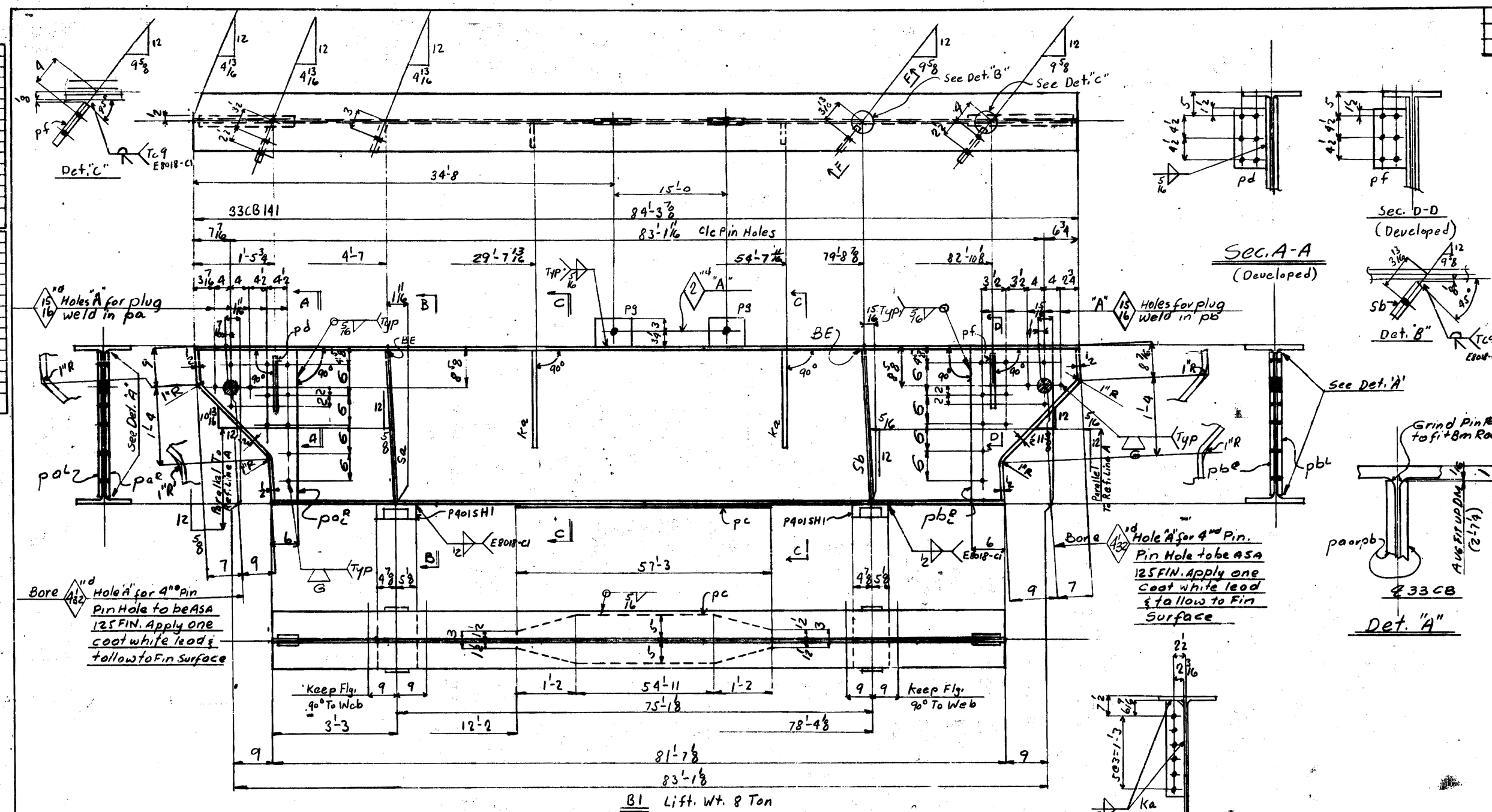

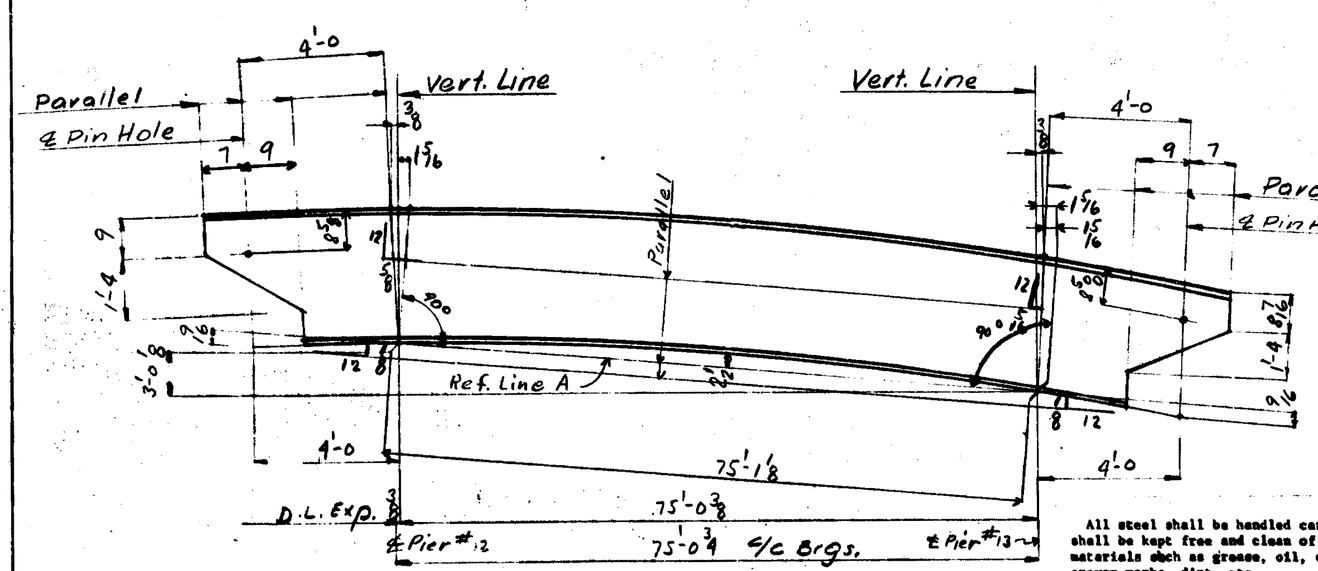

Cutting and Camber Diagram.

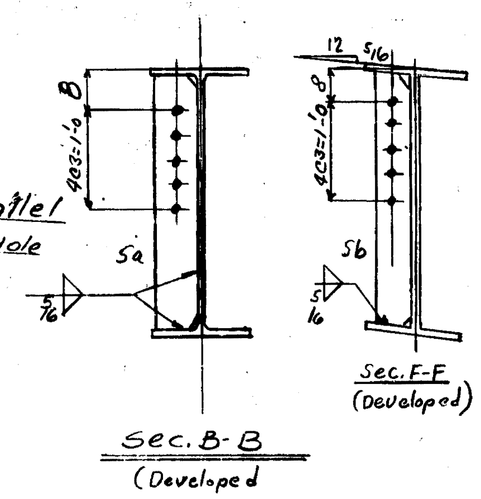

Line No.	Piece No.	No. of Pcs.	Mark	Material	Length		Weight		Shop Bolts	Field Bolts	Shop Bolt Length	Field Bolt Length	Shop Bolt Dia.	Field Bolt Dia.	Shop Bolt Grip	Field Bolt Grip	Shop Bolt Wt.	Field Bolt Wt.	Shop Bolt Hole	Field Bolt Hole	Shop Bolt Washers	Field Bolt Washers	Shop Bolt Nuts	Field Bolt Nuts	Shop Bolt Cut	Field Bolt Cut	Shop Bolt Bevel	Field Bolt Bevel	Shop Bolt Sheet	Field Bolt Sheet	Shop Bolt Sketch	Field Bolt Sketch	Shop Bolt Remarks	Field Bolt Remarks
1																																		
2																																		
3	1			BEAM							71281	84'																						
4	1	CB	33	141	84	4/16																			84-4/4		7002		702-2					
5	2	PL	22 3/8	7/16	2	7/8					pa ⊗				84 x 2 x 7/8 cut 2										84 x 22		53		A			
6	2	PL	20 5/8	5/8	2	7/8					pb ⊗				83 x 2 x 7/8 cut 2										83 x 20 5/8		R1107					
7	1	PL	10	1/4	57	3					pc				Cut 18										19-3		7022		702-3					
8	2	M	Top Shoe								P401SH1				Det. on Sh. P401																			
9	1	FLT	6 1/2	1/2	1	0	BIED				pd														6 1/2 x 30-0		R9010		702-21					
10	1	FLT	7	1/2	1	0	BIED				pf														7 1/2 x 30-0		R9107		702-25					
11	1	FLT	4	1/2	2	7/16	FIE 7/16				sa														4 1/2 x 30-5		R9009		702-23					
12																																		
13	1	FLT	5	1/2	2	7/16	BIED FIE 7/16 BIED				sb														5 1/2 x 30-5		R9136		702-29					
14																																		
15	2	FLT.	6 3/4	1/2		8					P9				1436														TS					
16	2	FLT	3 1/2	1/2	1	11/16	TIE				Ka														11-4		R9005		702-19					
17																																		
18																																		
19																																		
20																																		
21																																		
22																																		
23																																		
24																																		
25																																		
26																																		
27																																		
28																																		
29																																		
30																																		
31																																		
32																																		
33																																		
34																																		
35																																		
36																																		
37																																		
38																																		
39																																		
40																																		
41																																		
42																																		
43																																		
44																																		
45																																		
46																																		
47																																		
48																																		
49																																		
50																																		
51																																		
52																																		
53																																		
54																																		
55																																		
56																																		
57																																		
58																																		
59																																		
60																																		
61																																		
62																																		

K2828

Gen. Notes:-

Spec:- Michigan State Specs:- 1962, For Road & Bridge Construction & Special Provisions

Material:- ASTM-A441 Mod. (Cor-Ten "B") U.N.

Open Holes:- 13/16" ⌀ U.N.

Welding:- AWS & Special Provisions "USE E70XX LOW HYDROGEN ELECTRODES OR E71-XXXXX OR E72-XXXXX FLUX AND ELECTRODE COMBINATIONS" U.N.

Paint:- NO

CAMBER NOTE: CAMBER IS TO BE MEASURED WITH THE BEAM LYING ON ITS SIDE. ALLOWABLE CAMBER TOLERANCE IS ±¼". HEAT IS TO BE USED, IF NECESSARY, TO ASSURE CAMBER PERMANENCY WITHIN THE ABOVE TOLERANCE.

Open Holes are for High Strength Structural Bolts U.N "A" B.E. Denotes Bearing End Clip Stiff. 1 x 1

All steel shall be handled carefully and shall be kept free and clean of all foreign materials such as grease, oil, chalk marks, crayon marks, dirt, etc.

All shipping marks shall be made using a steel die.

The rounding of corners will not be required.

The far side of B1 and the near side of including the complete bottom flange, shall be blast cleaned in accordance with Steel Structures Painting Council Surface Preparation Specifications "No. 10 Near-White Blast Cleaning". SSPC-SP10-63 as soon as possible after fabrication.

MICHIGAN DEPT. OF STATE HIGHWAYS
BRIDGE X01 OF 82122K
EVERGREEN ROAD OVER I-96
(JEFFRIES FREEWAY)
DETROIT, (WAYNE COUNTY) MICHIGAN

Beam A @ span #13

American Bridge Division of USS United States Steel

FABRICATION REFERENCED TO: Gary

DRAWING MADE AT: Gary #2

MADE BY: WP DATE: 2-10-69 CHECKED BY: AH DATE: 7/4/69

IN CHARGE OF: Augenstine #5559

DRAWN NO. K2828 SHEET NO. 712

FOR LOCATION OF SHIPPING PIECES SHOWN ON THIS SHEET REFER TO SHIPPING PLANS: E9

F		
E		
D		
C		
B		
A	4-14-69	D

REVISIONS

FOR PLANT USE ONLY: PIECE MARK C3; NOS. MARK 5592; COST CENTERS; PROD.; MISC. PROD.; PER ENGRG. CODE; SHIPPED; LINE; 56; 12

(3)

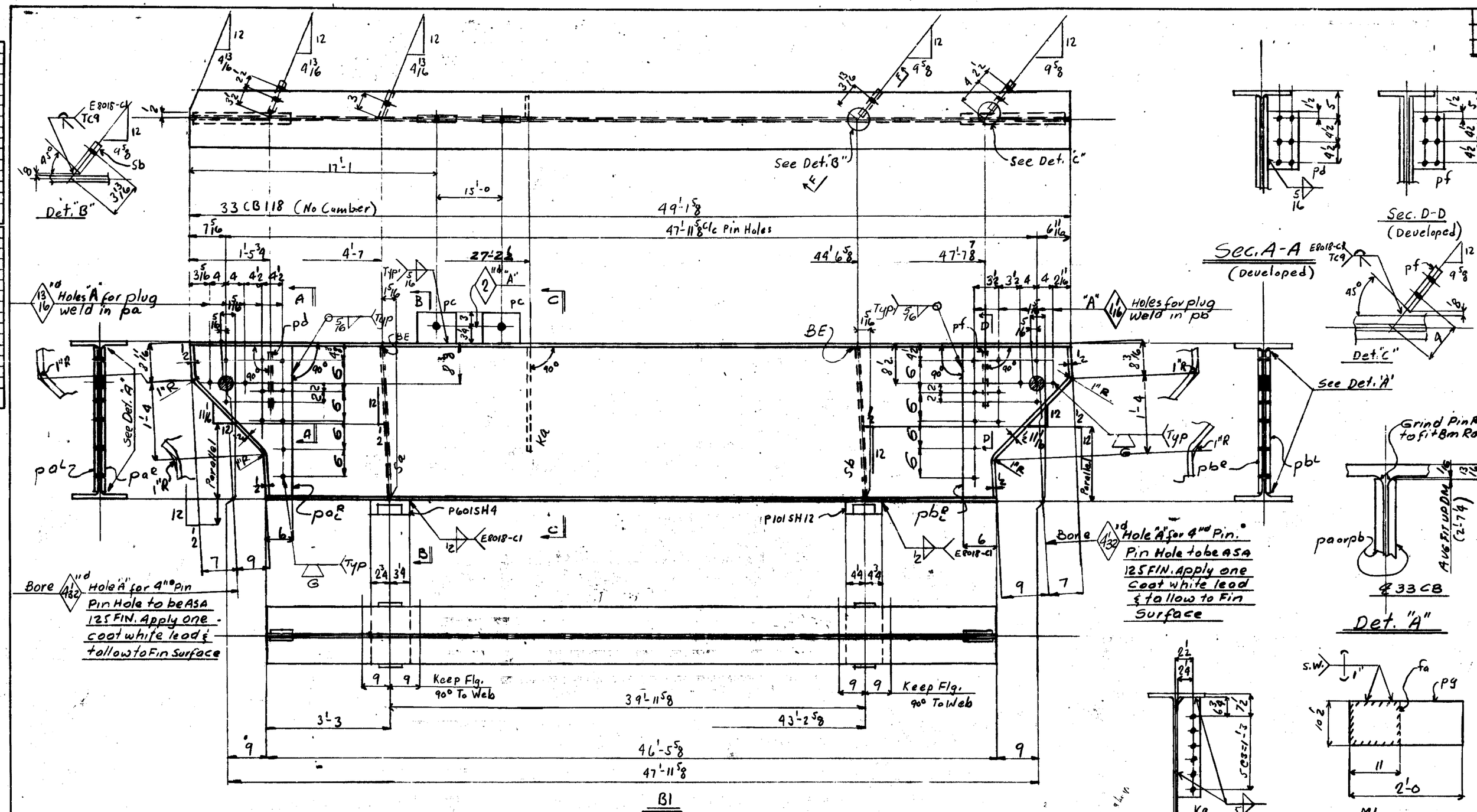

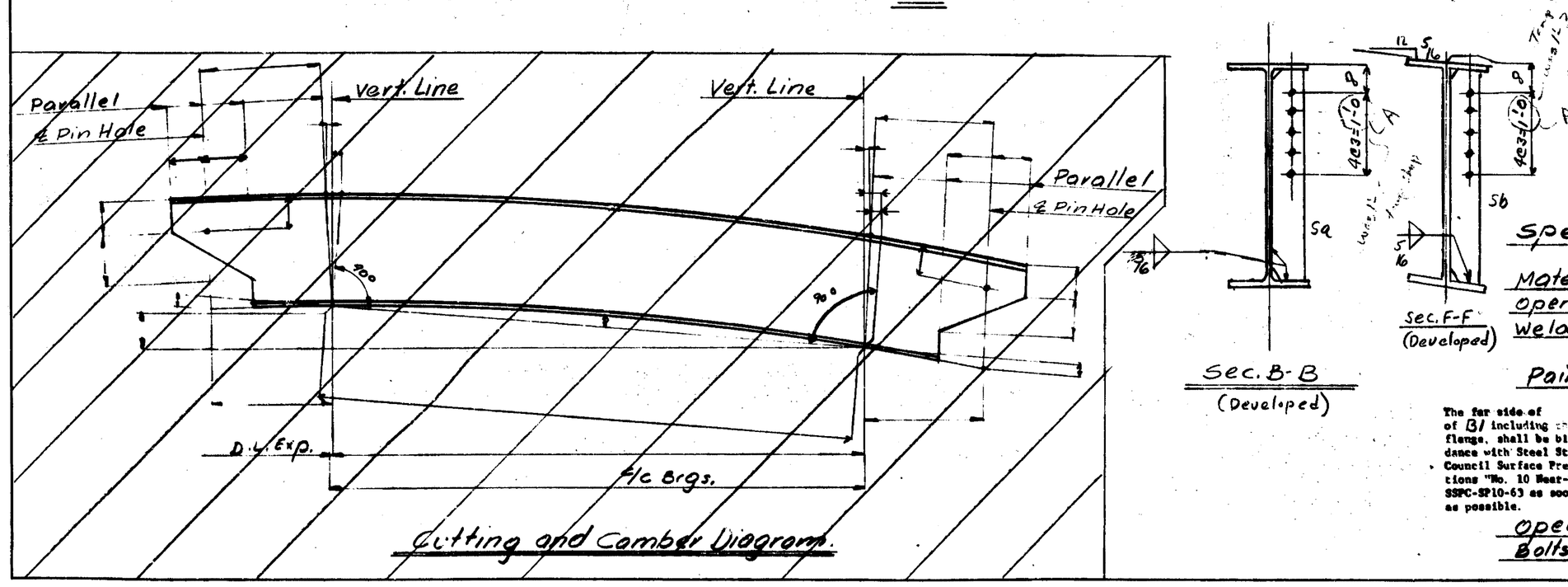

Line No.	Number of Pieces	Mark	Material	Length Feet	Length Inches	Fabrication	Shipping Weight	Fabricating Specifications or Assembling Guide	Shipping Specifications or Assembling Reference	Remarks	Drawing	Material Specification
3	1		BEAM					713 B1	49'			
4	1	CB	33 118	49	1 1/16						49-4.5	70001 702-18
5	2	PL	22 1/2 1/2	2	7 9			pa R		29 1/2 x 2 7/8 Cut 2 2	50 1/2 x 30-0	70137 703-2
6	2	PL	20 1/2 1/16	2	7 9			pb R		27 1/2 x 2 7/8 Cut 2 2	50 1/2 x 30-1	70001 703-5
7	1	M	Top Shoe					P601SH4		Det. on Sh. P601	—	
8	1	M	Top Shoe					P101SH12		Det. on Sh. P101	—	
9	2	FLT	6 9 1/2		8			pc		A36		IG
10	1	FLT	6 1/2 1/2	1	0	BIED		pd			20-0	70010 702-21
11	1	FLT	7 1/2	1	0	BIED		pf				70137 702-25
12	1	FLT	4 1/2	2	7/16	FIE BIED		Sa			4 x 30-5	70009 702-23
14	1	FLT	5 1/2	2	7/16	FIE BIED		Sb			8 x 30-5	70134 702-24
16	1	FLT	3 1/2 1/2	1	11 1/4	TIE		ka			16-4	70005 702-19
21	11		STAY PLATE					713 M1				
22	11	PL	10 1/2 1/2	2	0			pg			8 5/8 x 34 5/8	70016 602-21
23	11	STR	10 1/2 1/8		11			fa		A303		IG S

K2828

Gen. Notes:-

Spec:- Michigan State Specs:- 1967, For Road & Bridge Construction & Special Provisions

Material:- ASTM-A441 Mod. (Cor-Ten "B") U.N.

Open Holes:- 13/16" ø U.N.

Welding:- AWS & Special Provisions

"USE E70XX LOW HYDROGEN ELECTRODES OR F71-XXXXX OR F72-XXXXX FLUX AND ELECTRODE COMBINATIONS." U.N.

Paint:- NO

The far side of and the near side of B1 including the complete bottom flange, shall be blast cleaned in accordance with Steel Structures Painting Council Surface Preparation Specifications "No. 10 Near-White Blast Cleaning". SSPC-SP10-63 as soon after fabrication as possible.

All steel shall be handled carefully and shall be kept free and clean of all foreign materials such as grease, oil, chalk marks, crayon marks, dirt, etc.

All shipping marks shall be made using a steel die.

The rounding of corners will not be required.

Open Holes are for High Strength structural Bolts U.N "A" B.E. Denotes Bearing End Clip Stiff. 1 1/2 x 1 1/2

MICHIGAN DEPT. OF STATE HIGHWAYS
BRIDGE X01 OF 82122K
EVERGREEN ROAD OVER I-96
(JEFFRIES FREEWAY)
DETROIT, (WAYNE COUNTY) MICHIGAN

Beam L @ span #13

American Bridge Division of USS United States Steel

Fabrication Assigned to Gary
Drawing Made by Gary #2
Made by LP Date 2-11-63 Checked by ALH Date 3/4/63
In Charge of Augenstine #5559

Order No. K2828 Sheet No. 713

For Location of Shipping Pieces Shown on This Sheet Refer to Erection Plans: E9 E8

Cost Center: 55923 Line Diagram: 15

Revisions: D 5/-9/63

Rev. 9-61

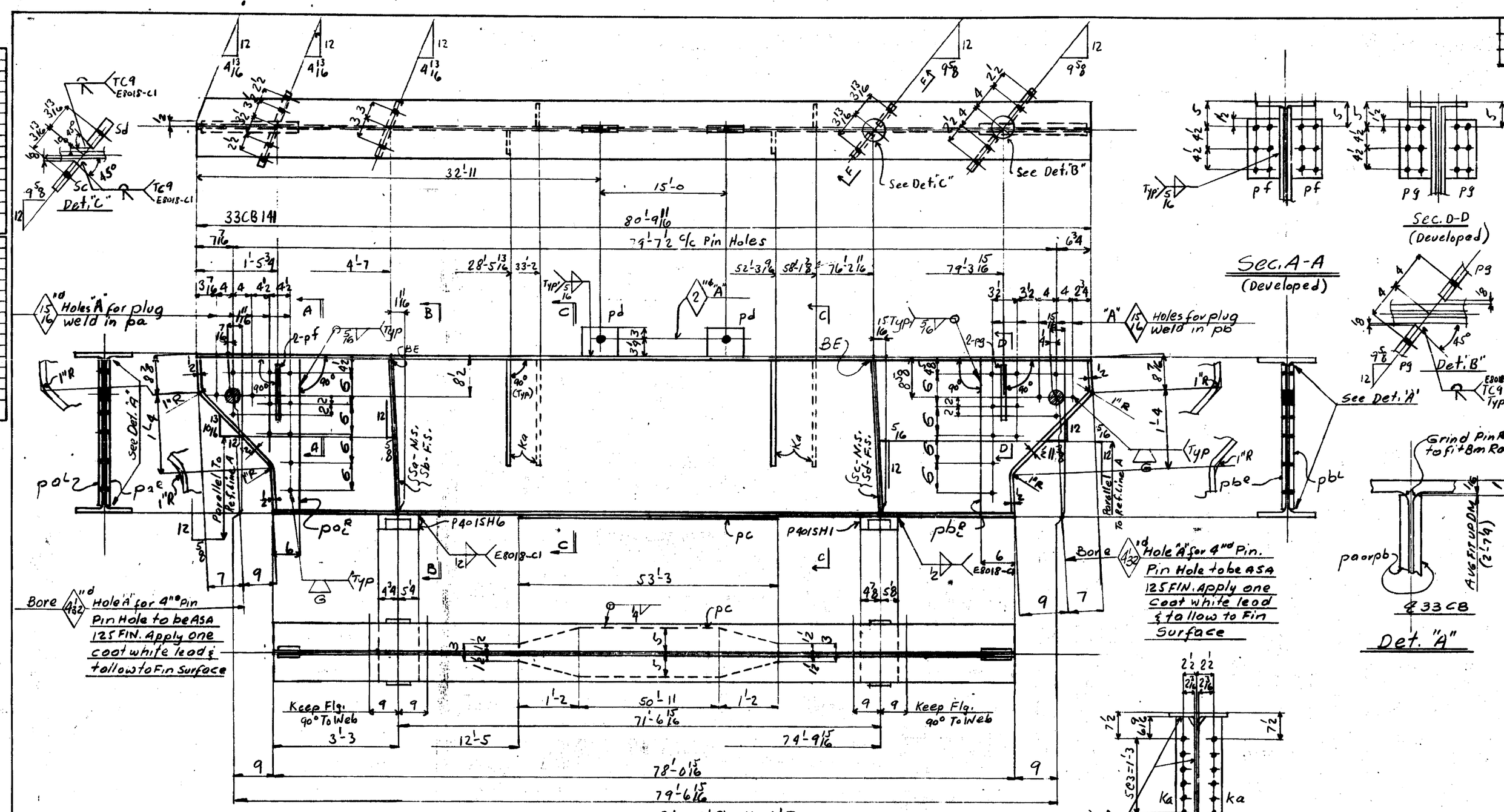

Piece Mark	No. of Pieces	Material	Length Feet	Length Inches	Weight Each	Weight Total	Fabrication Specifications or Assembling Diagram	Shop Drawing	Erection Specifications or Assembling Diagram	Remarks	Erection Piece Mark	Shop Drawing
3	1	BEAM					71481	81'				
4	1	CB 33 141	80	9 15/16						81-0 1/4	7001	702-4
5	2	PL 22 3/16	2	7 1/4			pa		89 3/8 x 2-7 1/4 Cut 2	89 3/8	85	703-2
6	2	PL 20 1/2 3/8	2	7 1/4			pb		87 3/8 x 2-7 1/4 Cut 2	87 3/8	99101	703-4
7	1	PL 10 3/4	53	3			pc			53-3	99083	702-5
8	1	M Top Shoe					P401SH6			Cov. PL 53-3		
9	1	M Top Shoe					P401SH1			Det. on Sh. P401		
10	2	FLT 6 1/4 1/2		8			pd		A36		TS	
11	2	FLT 6 1/2 1/2	1	0	BIED		pf			6 1/2 x 1-0	99110	702-21
12	2	FLT 7 1/2	1	0	BIED		pg			7-0	99131	702-25
13	1	FLT 4 1/2	2	7 1/16	BIED TIE		sa			4-0 30-5	99009	702-23
15	1	FLT 4 1/2	2	7 1/16	BIED TIE		sb				99009	702-23
17	1	FLT 5 1/2	2	7 1/16	BIED TIE		sc				99030	702-23
19	1	FLT 5 1/2	2	7 1/16	BIED TIE		sd			5 x 30-5	99036	702-29
21	4	FLT 3 1/2 1/2	1	11/16	BIED TIE		ka				99036	702-29

K2828

Gen. Notes:-

Spec.:- Michigan State Spec.s:- 1967, For Road & Bridge Construction & Special Provisions

Material:- ASTM-A441 Mod. (Cor-Ten "B") U.N.

Open Holes:- 1 3/8" d U.N.

Welding:- AWS & Special Provisions "USE E70XX LOW HYDROGEN ELECTRODES OR F71-XXXXX OR F72-XXXXX FLUX AND ELECTRODE COMBINATIONS" U.N.

Paint:- NO

CAMBER NOTE: CAMBER IS TO BE MEASURED WITH THE BEAM LYING ON ITS SIDE. ALLOWABLE CAMBER TOLERANCE IS ±¼". HEAT IS TO BE USED, IF NECESSARY, TO ASSURE CAMBER PERMANENCY WITHIN THE ABOVE TOLERANCE.

All steel shall be handled carefully and shall be kept free and clean of all foreign materials such as grease, oil, chalk marks, crayon marks, dirt, etc.
All shipping marks shall be made using a steel die.
The rounding of corners will not be required.

Open Holes are for High Strength Structural Bolts U.N "A" B.E. Denotes Bearing End Clip Stiff. 1 1/2 x 1 1/2

MICHIGAN DEPT. OF STATE HIGHWAYS
BRIDGE X01 OF 82122K
EVERGREEN ROAD OVER I-96
(JEFFRIES FREEWAY)
DETROIT, (WAYNE COUNTY) MICHIGAN

Beam 8 @ span #13

American Bridge Division of USS United States Steel

Fabrication assigned to Gary
Working shop at Gary #2
Made by WP Date 2-11-69 Checked by AH Date 3/4/69
In charge of Augenstine #5559

Drawn No. K2828 Sheet No. 714

Piece No. 3 Sub. Contr. 55934
Unit Contrib. Yrds. Sub. Yrds. Per Bank Cubic Yrds. 56
Revised Rev. Sub. Shop Drawings Line Changes 15
Revisions: (A) 6-14-69 (D) D
For location of shipping pieces shown on this sheet refer to erection plans: E9
Job. Bill

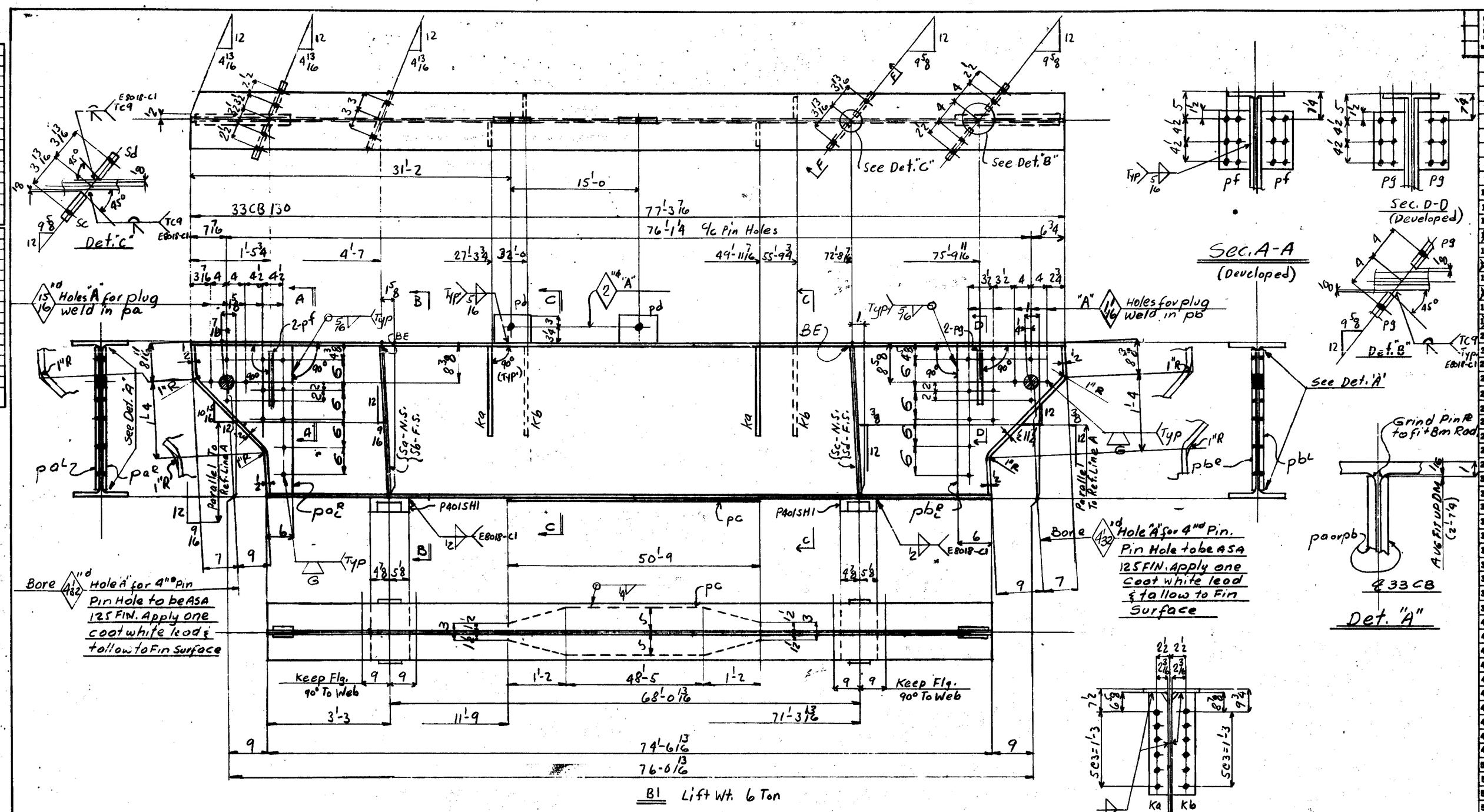

Cutting and Camber Diagram.

All steel shall be handled carefully and shall be kept free and clean of all foreign materials such as grease, oil, chalk marks, crayon marks, dirt, etc.

All shipping marks shall be made using a steel die.

The rounding of corners will not be required.

CAMBER NOTE: CAMBER IS TO BE MEASURED WITH THE BEAM LYING ON ITS SIDE. ALLOWABLE CAMBER TOLERANCE IS ±1". HEAT IS TO BE USED, IF NECESSARY, TO ASSURE CAMBER PERMANENCY WITHIN THE ABOVE TOLERANCE.

Gen. Notes:-

Spec:- Michigan State Spec.s:- 1967, For Road & Bridge Construction & Special Provisions

Material:- ASTM-A441 Mod. (Cor-ten "B") U.N.

Open Holes:- 13/16" ⌀ U.N.

Welding:- AWS & Special Provisions "USE E70XX LOW HYDROGEN ELECTRODES OR E71-XXXXX OR E72-XXXXX FLUX AND ELECTRODE COMBINATIONS." U.N.

Paint:- NO

Open Holes are for High Strength structural Bolts U.N "A" B.E. Denotes Bearing End Clip Stiff. 1 1/2 x 1 1/2

MARK	NO. OF PIECES	NO. OF PIECES REQUIRED	MATERIAL	LENGTH FEET	LENGTH INCH	WEIGHT								
	1	1	BEAM						71SB1	77'				
	4	1	CB 33 130	77	3 1/16							77-6	70018	702-6
	5	2	PL 20 3/4 5/8	2	7 1/4				pa R		24 1/2 x 2-7 1/4 / 20 3/4 x 5/8	30 3/4 / 20 3/4	99109	703-4
	6	2	PL 20 3/4 7/16	2	7 1/4				pb R		87 1/2 x 2-7 1/4 / 20 3/4 x 7/16	90 1/2 / 20 3/4	99001	703-5
	7	1	PL 10 3/4	50	9				pc		Cov. PL	50-9 / 10 3/4	99104	702-7
	8	2	M Top Shoe						P401SH1		Det. "B" & "D"	—		
	9	2	FLT 6 1/2		8				pd		M36		TS	
	10	2	FLT 6 1/2	1	0	BIED			pf			7 5X 20.5	99010	702-21
	11	2	FLT 7 1/2	1	0	BIED			pg			7 5X 20.5	99121	702-25
	12	1	FLT 9 1/2	2	7 7/16	FIE TIE			Sa			9 5X 35.5	99009	702-23
	13	1	FLT 9 1/2	2	7 7/16	BIED FIE TIE			Sb				99009	702-23
	14	1	FLT 5 1/2	2	7 7/16	BIED FIE TIE			Sc			5 5X 30.5	99136	702-24
	15	1	FLT 5 1/2	2	7 7/16	BIED FIE TIE			Sd				99136	702-24
	16	2	FLT 3 1/2 1/2	1	11 1/8	TIE			Ka			16-4	99006	702-19
	17	2	FLT 3 1/2 1/2	2	1 1/8	TIE			Kb			18-4	99006	702-20

K 2828

MICHIGAN DEPT. OF STATE HIGHWAYS
BRIDGE X01 OF 82122K
EVERGREEN ROAD OVER I-96
(JEFFRIES FREEWAY)
DETROIT, (WAYNE COUNTY) MICHIGAN

Beam C @ span #13

American Bridge Division of USS United States Steel

FABRICATED ACCORDING TO Gary
DRAWING MADE BY Gary #2
MADE BY WJP DATE 2-11-69 CHECKED BY AJH DATE 3/4/69
CHECKED BY Augenstine #5559

CONTRACT NO. C3 | SHEET NO. 55925 | COST CENTERS | PROD. | DES. PROD. | PER SHEET CODE | 37 | 15

F	
E	
D	
C	
B	
A	

REVISIONS

FOR LOCATION OF SHIPPING PIECES SHOWN ON THIS SHEET REFER TO DRAWING PLANS: E9

DRAWING NO. K2828 | SHEET NO. 715

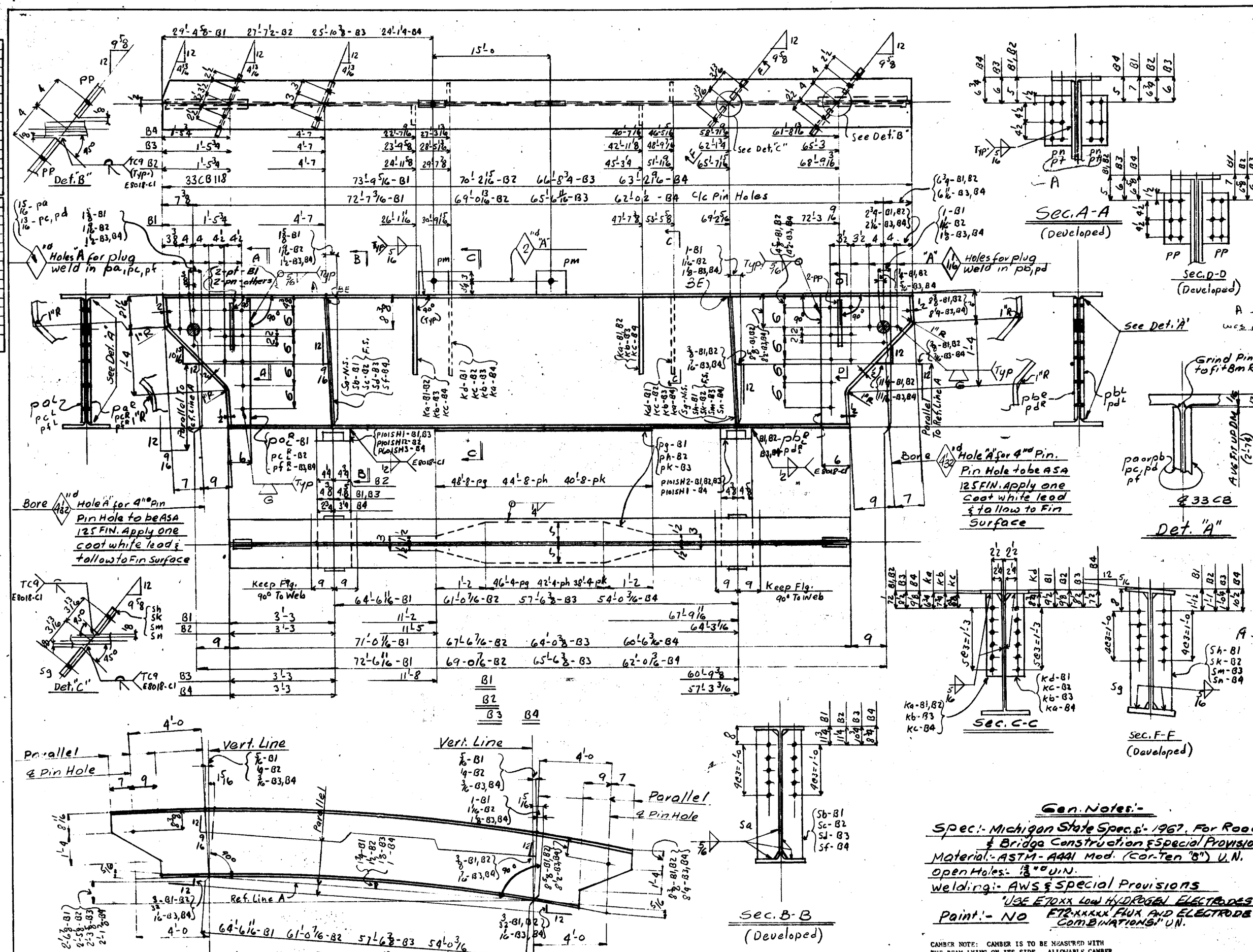

Item	Material	Length Feet	Length Inches	Fabricated Weight Each	Fabricated Weight Total	Specification	Remarks	Location	Weight	Drawing
2	BEAM				71681	74'				
3	BEAM				71682	70'				
4	BEAM				71683	67'				
5	BEAM				71684	63'				
6	CB 33 118	73	9 7/16		B1			73-11-84	70017	702-8
7	CB 33 118	70	3 7/8		B2			70-5-82	70016	702-10
8	CB 33 118	66	9 1/16		B3			66-11-83	70015	702-12
9	CB 33 118	63	2 3/8		B4			63-5-14	70014	702-14
10	PL 22 3/4 5/8	2	7 1/4		pa R	B1	2@22 3/4 Cut 2	45-14-A 93-9-A	70107	703-4
11	PL 20 3/4 1/16	2	7 1/4		pb R	B1, B2	2@22 3/4 Cut 2	60-X 30-1	99009	703-5
12	PL 22 3/4 1/2	2	7 1/4		pc R	B2	2@22 3/4 Cut 2		99137	703-2
13	PL 20 3/4 1/16	2	7 1/4		pd R	B3, B4	2@22 3/4 Cut 2		99009	703-3
14	PL 22 3/4 1/2	2	7 1/4		pf R	B3, B4	2@22 3/4 Cut 2		99137	702-2
15	PL 10 5/8	48	8		pg	B1	Cov. Pl	13-3-X 30-5	99108	702-9
16	PL 10 1/2	44	8		ph	B2	Cov. Pl	10-X 30-5	99009	702-11
17	PL 10 3/8	40	8		pk	B3	Cov. Pl	8-X 30-5	99137	702-13
18	3 M Top Shoe				PlOISH1	B1, B3, B4	Det. on Sh. P101			
19	1 M Top Shoe				PlOISH2	B2				
20	3 M Top Shoe				PlOISH2	B1, B2, B3				
21	1 M Top Shoe				PlOISH3	B4				
22	8 FLT 6 1/2		8		pm		A36		IS	
23	6 FLT 6 1/2	1	0	BIED	pn	B2, B3, B4		6-X 30-5	99010	702-21
24	8 FLT 7 1/2	1	0	BIED	pp				99137	702-25
25	4 FLT 9 1/2	2	7 1/16	BIED FIT FIE	Sa			30-5	99009	702-23
27	1 FLT 4 1/2	2	7 1/16	BIED FIT FIE	Sb	B1			99009	702-23
29	1 FLT 4 1/2	2	7 1/16	BIED FIT FIE	Sc	B2			99009	702-23
31	1 FLT 4 1/2	2	7 1/16	BIED FIT FIE	Sd	B3			99009	702-23
33	1 FLT 4 1/2	2	7 1/16	BIED FIT FIE	Sf	B4			99009	702-23
35	4 FLT 5 1/2	2	7 1/16	BIED FIT FIE	Sg			BIX 30-5	99136	702-24
37	1 FLT 5 1/2	2	7 1/16	BIED FIT FIE	Sh	B1			99136	702-24
39	1 FLT 5 1/2	2	7 1/16	BIED FIT FIE	Sk	B2			99136	702-24
41	1 FLT 5 1/2	2	7 1/16	BIED FIT FIE	Sm	B3			99136	702-24
43	1 FLT 5 1/2	2	7 1/16	BIED FIT FIE	Sn	B4			99136	702-24
45	6 FLT 3 1/2 1/2	1	1 1/4	TIE	ka	2-B1, B2, B4		11-4	99006	702-19
46	4 FLT 3 1/2 1/2	2	0 1/4	TIE	kb	B3		5-X 2-18-4	99006	702-19
47	4 FLT 3 1/2 1/2	2	0 3/8	TIE	kc	2-B2, B4			99006	702-20
48	2 FLT 3 1/2 1/2	2	1 1/4	TIE	kd	B1			99006	702-20
49										
50	2 FLT 6 1/2 5/8	1	0	BIED	pt	B1			99010	702-21
51										
52										
53										
54										
55										
56										
57										
58										
59										
60										
61										
62										

K2828

Gen. Notes:-

Spec:- Michigan State Specs:- 1967, For Road & Bridge Construction & Special Provisions

Material:- ASTM-A441 Mod. (Cor-ten "B") U.N.

Open Holes:- 13/16" U.N.

Welding:- AWS & Special Provisions

"USE E70XX LOW HYDROGEN ELECTRODES OR E71-XXXXX OR E72-XXXXX FLUX AND ELECTRODE COMBINATIONS" U.N.

Paint:- NO

CAMBER NOTE: CAMBER IS TO BE MEASURED WITH THE BEAM LYING ON ITS SIDE. ALLOWABLE CAMBER TOLERANCE IS ±1/4". HEAT IS TO BE USED, IF NECESSARY, TO ASSURE CAMBER PERMANENCY WITHIN THE ABOVE TOLERANCE.

Open Holes are for High Strength Structural Bolts U.N "A" B.E. Denotes Bearing End Clip Stiff. 1 x 1 1/2

All steel shall be handled carefully and shall be kept free and clean of all foreign materials such as grease, oil, chalk marks, crayon marks, dirt, etc.

All shipping marks shall be made using a steel die.

The rounding of corners will not be required.

MICHIGAN DEPT. OF STATE HIGHWAYS
BRIDGE X01 OF 82122K
EVERGREEN ROAD OVER I-96
(JEFFRIES FREEWAY)
DETROIT, (WAYNE COUNTY) MICHIGAN

Beams @ span #13
Line D Thru G

American Bridge Division of United States Steel

FABRICATED REFERRED TO: Gary
DRAWING MADE BY: Gary #2
MADE BY: LP DATE: 2-13-69 CHECKED BY: AHH DATE: 3-4-69
IN CHARGE OF: Augenstine #5559

DWG. NO. K2828 | SHEET NO. 716

FOR LOCATION OF SHIPPING PIECES SHOWN ON THIS SHEET REFER TO SHIPPING PLANS: E9

REV. BILL

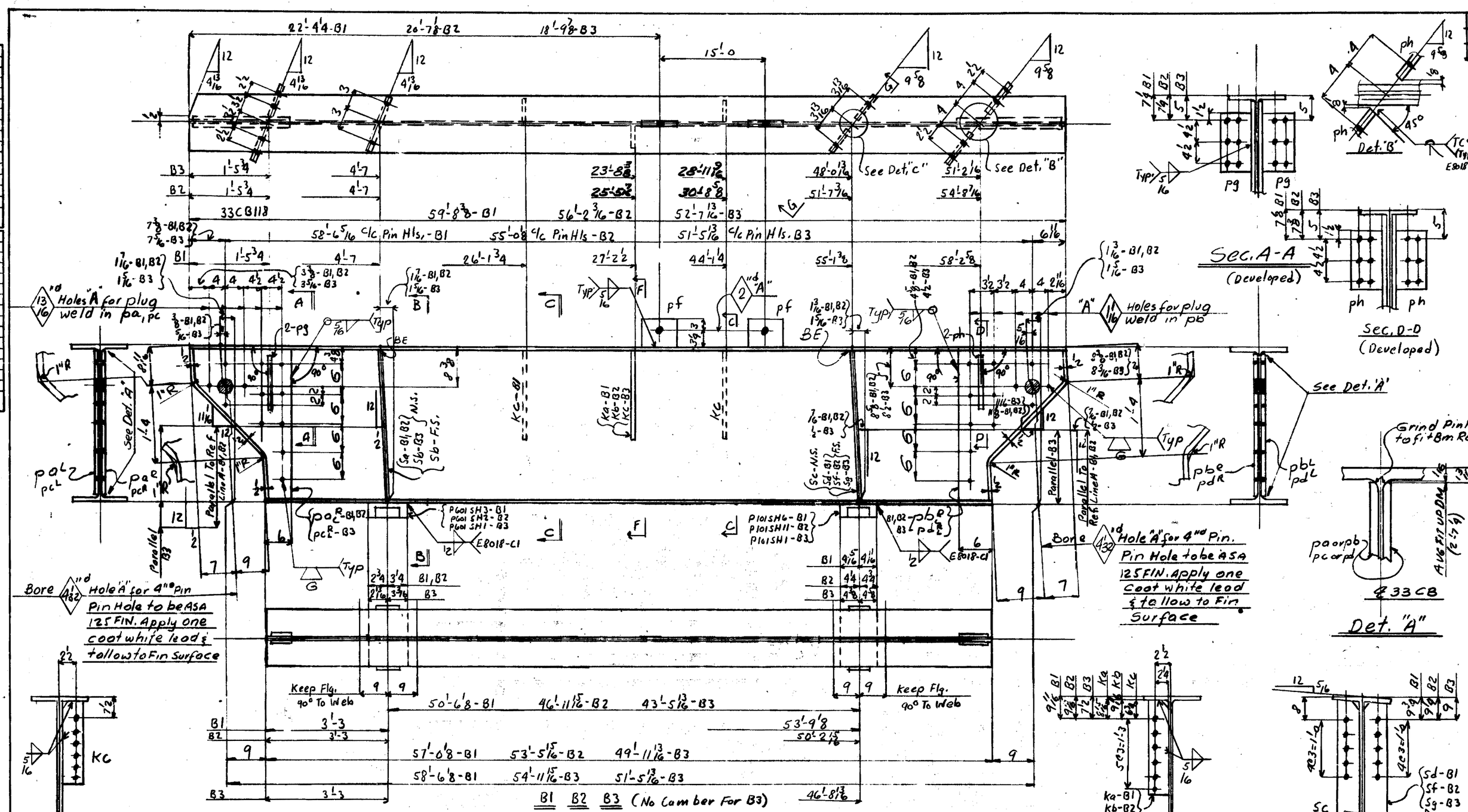

Line No.	Piece Mark	No. Req'd	Material	Dimensions	Length Feet	Length Inches	Weight Basic	Weight Extra	Shipping Weight	Specifications	Specifications for Assembling Shop	Remarks	Sketch	Sheet	Calculation Sheet Number
1															
2		1	BEAM							717B1	60'				
3		1	BEAM							717B2	56'				
4		1	BEAM							717B3	53'				
5		1	CB	33	118	59	8 1/16			B1			40-0	7012	702-15
6		1	CB	33	118	56	2 3/4			B2			56-5	7011	702-16
7		1	CB	33	118	52	8 3/8			B3			53-10	7009	702-17
8		4	PL	22 3/4	1/2	2	7/8			pa R	B1, B2	22 3/4 x 2 7/8 Cut 2	8 3/4 x 2 7/8 Cut 2	7001	703-2
9		4	PL	20 3/4	1/16	2	7/8			pb L	B1, B2	2 7/8 x 22 7/8 Cut 2	20 x 2 7/8 Cut 2	7001	703-3
10		2	PL	22 3/4	1/2	2	7/8			pc R	B3	2 7/8 x 22 7/8 Cut 2		7001	703-2
11		2	PL	20 1/2	1/16	2	7/8			pd R	B3	2 7/8 x 22 7/8 Cut 2		7001	703-3
12		1	M	Top Shoe						P101SH3	B1		—		
13		1	M	Top Shoe						P101SH2	B2	Det. on	—		
14		1	M	Top Shoe						P101SH1	B3	Sh. P101	—		
15		1	M	Top Shoe						P101SH6	B1		—		
16		1	M	Top Shoe						P101SH11	B2	Det. on	—		
17		1	M	Top Shoe						P101SH1	B3	Sh. P101	—		
18		6	FLT	6 3/4	1/2		8			pf		A36		TS	
19		6	FLT	6 1/2	1/2	1	0	BIED		pg			6 1/2 x 20-0	7010	702-21
20		6	FLT	7	1/2	1	0	BIED		ph			7 x 30-0	7011	702-25
21		2	FLT	4	1/2	2	7/16	TIE FIE		sa	B1, B2		4 x 30-5	7009	702-23
22		4	FLT	4	1/2	2	7/16	BIED TIE FIE		sb	B-B3 F-B1, B2			7009	702-23
23		3	FLT	5	1/2	2	7/16	BIED TIE FIE		sc			5 1/2 x 30-5	7016	702-24
24		1	FLT	5	1/2	2	7/16	BIED TIE FIE		sd	B1			7016	702-24
25		1	FLT	5	1/2	2	7/16	BIED TIE FIE		sf	B2			7016	702-24
26		1	FLT	5	1/2	2	7/16	BIED TIE FIE		sg	B3			7016	702-24
27		1	FLT	3 1/2	1/2	2	1/2	BIED TIE		ka	B1		3 1/2 x 12-4	7006	702-20
28		1	FLT	3 1/2	1/2	2	1/2	TIE		kb	B2			7006	702-20
29		5	FLT	3 1/2	1/2	1	1/2	TIE		kc	B-B1, B3 F-B3			7006	702-19 702-20
30															
31															
32															
33															
34															
35															
36															
37															
38															
39															
40															
41															
42															
43															
44															
45															
46															
47															
48															
49															
50															
51															
52															
53															
54															
55															
56															
57															
58															
59															
60															
61															
62															

K 2828

All steel shall be handled carefully and shall be kept free and clean of all foreign materials such as grease, oil, chalk marks, crayon marks, dirt, etc.
All shipping marks shall be made using a steel die.
The rounding of corners will not be required.

Gen. Notes:-

Spec:- Michigan State Spec.s:- 1967, For Road & Bridge Construction & Special Provisions
Material:- ASTM-A441 Mod. (Cor-Ten "B") U.N.
Open Holes:- 13/16" d U.N.
Welding:- AWS & Special Provisions
"USE E70XX LOW HYDROGEN ELECTRODES OR E71-XXXXX OR E72-XXXXX FLUX AND ELECTRODE COMBINATIONS!" U.N.
Paint:- NO

CAMBER NOTE: CAMBER IS TO BE MEASURED WITH THE BEAM LYING ON ITS SIDE. ALLOWABLE CAMBER TOLERANCE IS ±1/4". HEAT IS TO BE USED, IF NECESSARY, TO ASSURE CAMBER PERMANENCY WITHIN THE ABOVE TOLERANCE.

Open Holes are for High Strength Structural Bolts U.N "A" B.E. Denotes Bearing End
Clip Stiff. 1 1/2 x 1 1/2

MICHIGAN DEPT. OF STATE HIGHWAYS
BRIDGE X01 OF 82122K
EVERGREEN ROAD OVER I-96
(JEFFRIES FREEWAY)
DETROIT, (WAYNE COUNTY) MICHIGAN

Beams @ span #13
Line H, J, K

American Bridge Division of USS United States Steel

Fabrication Shop: Gary
Erection Shop: Gary #2
Drawn by: WP Date: 2-13-69 Checked by: ALH Date: 3/4/69
Detailed by: Augenstine #5559

Shop No. 559-97
Cost Center: Prod. / Non Prod.
Weight: Basic / Extra / Total
Shipped: Sheet / Cumulative
28
Revisions: A 3/28/69 D

Piece Marks Shown on This Sheet Refer to Erection Plan: E9

Sheet No. K2828 | Sheet No. 717

ZENITH A. & B. SMITH PGH., PA. M-0000-000

D-81XC REV. 566

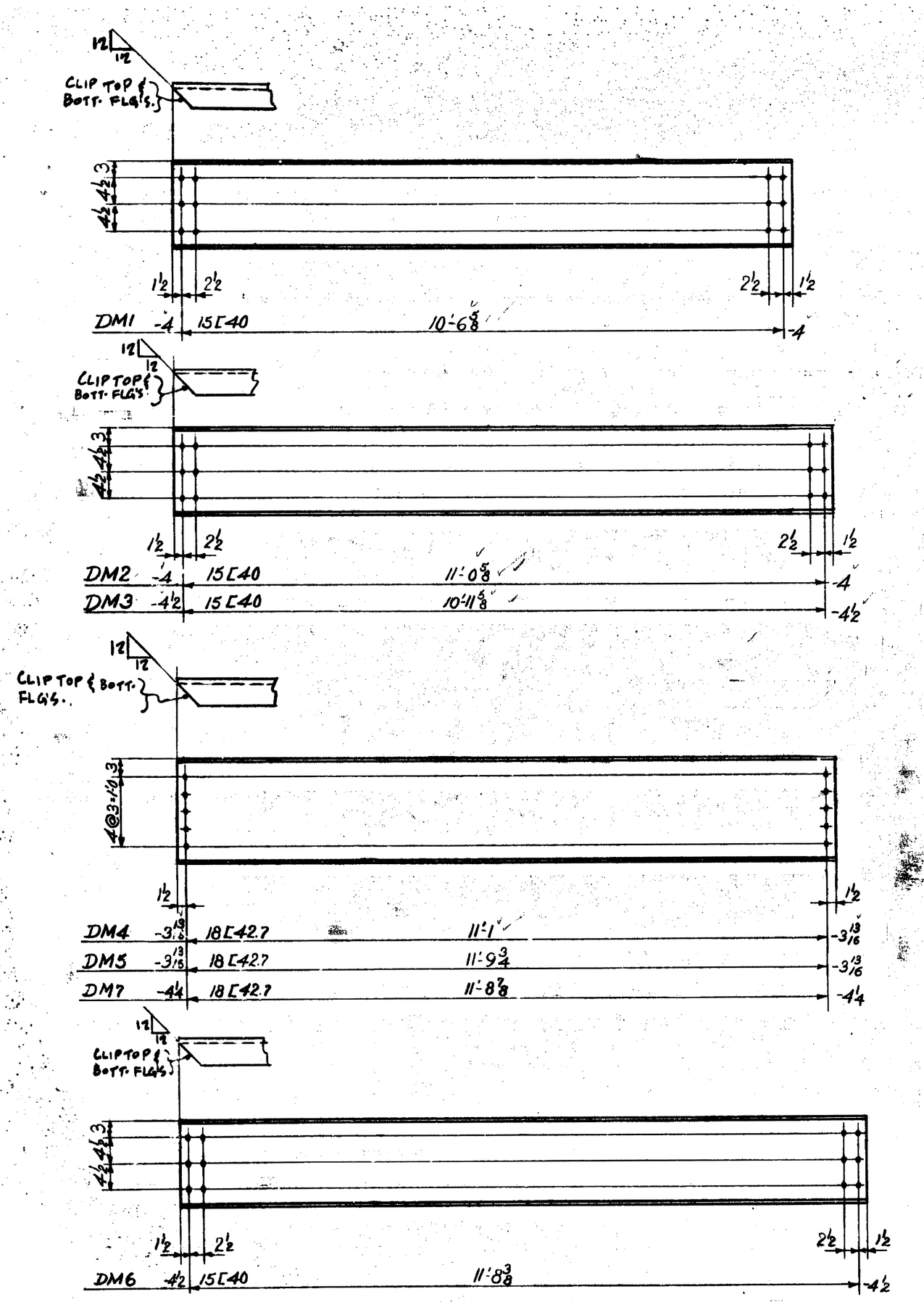

All steel shall be handled carefully and shall be kept free and clean of all foreign materials such as grease, oil, chalk marks, crayon marks, dirt, etc.

All shipping marks shall be made using a steel die.

The rounding of corners will not be required.

Div. 9	Div. 8	Line No.	Total No. of Pcs. on Order	No. of Pcs. on Sketch	Assbly. Desc.	Material Dimensions	Length Feet	Length Inch	Finish and Trim Desc.	Finish and Trim Inch	Shipping or Assembling Mark	Shipping Specifications or Assembling Reference	Remarks	Ordered	Item	Checkers Stamp for Shop Piece
		1														
		2														
	10	3		10		DIAPHRAGM					801 DM1	11'	LOOSE			
		4		10	CH	15 40	10	9⅜						M 55-2	803	803/15
		5														
		6														
	10	7		10		DIAPHRAGM					801 DM2	11'	LOOSE			
	10	8		10		DIAPHRAGM					801 DM3	11'	LOOSE			
		9		10	CH	15 40	11	3⅝				DM2		M 52-114	803	803/16
		10		10	CH	15 40	11	2⅝				DM3		M 52-5	803	803/17
		11														
20		12		20		DIAPHRAGM					801 DM7	12'	LOOSE			
	10	13		10		DIAPHRAGM					801 DM4	11'	LOOSE			
	10	14		10		DIAPHRAGM					801 DM5	12'	LOOSE			
		15		10	CH	18 42.7	11	4				DM4		M 34-114	803	803/19
		16		10	CH	18 42.7	12	0¾				DM5		M 34-4	803	803/20
		17		20	CH	18 42.7	11	11⅞				DM7		M 34-4	803	803/26
		18														
20	10	19		30		DIAPHRAGM					801 DM6	12'	LOOSE			
		20		30	CH	15 40	11	11⅞					10-M 20-M	60-0 40-113	803 803	803/24 803/25
		21														
		22														
		23														
		24														
		25														
		26														
		27														
		28														
		29														
		30														
		31														
		32														
		33														
		34														
		35														
		36														
		37														
		38														
		39														
		40														
		41														
		42														
		43														
		44														
		45														
		46														
		47														
		48														
		49														
		50														
		51														
		52														
		53														
		54														
		55														
		56														
		57														
		58														
		59														
		60														
		61														
		62														

MATERIAL: ASTM A441 ~~Man.~~ (Cor-ten 'B'). K2828
SPLICES: NONE
OPEN HOLES: 13/16" ø
WELDING: NONE

PAINT: No
SHOP CONTACT SURFACES: No

MICHIGAN DEPT. OF STATE HIGHWAYS
BRIDGE X01 OF 82122K
EVERGREEN ROAD OVER I-96
(JEFFRIES FREEWAY)
DETROIT, (WAYNE COUNTY) MICHIGAN

DIAPHRAGMS

American Bridge
Division of United States Steel Corporation

FAB PLT. 03 SEQ. CODE 561123
COST CENTERS: NO. CHG. IN BSD; PROD.; NON PROD.; PAY BASIS CODE 5a
WEIGHT REV. NO.; EXCEPTION SHOP DIVISION; LINE CONTROL 14
REVISIONS: F E D C B A

FABRICATION ASSIGNED TO Gary
DRAWING MADE BY Gary #2
MADE BY BR DATE 1/8/69 CHECKED BY D.Z. DATE 1-20-69
IN CHARGE OF [redacted]

FOR LOCATION OF SHIPPING PIECES SHOWN ON THIS SHEET REFER TO ERECTION PLANS
E9 & E10

ORDER NO. K2828
SHEET NO. 801

ADV. BILL

D-63XC REV. 9-67

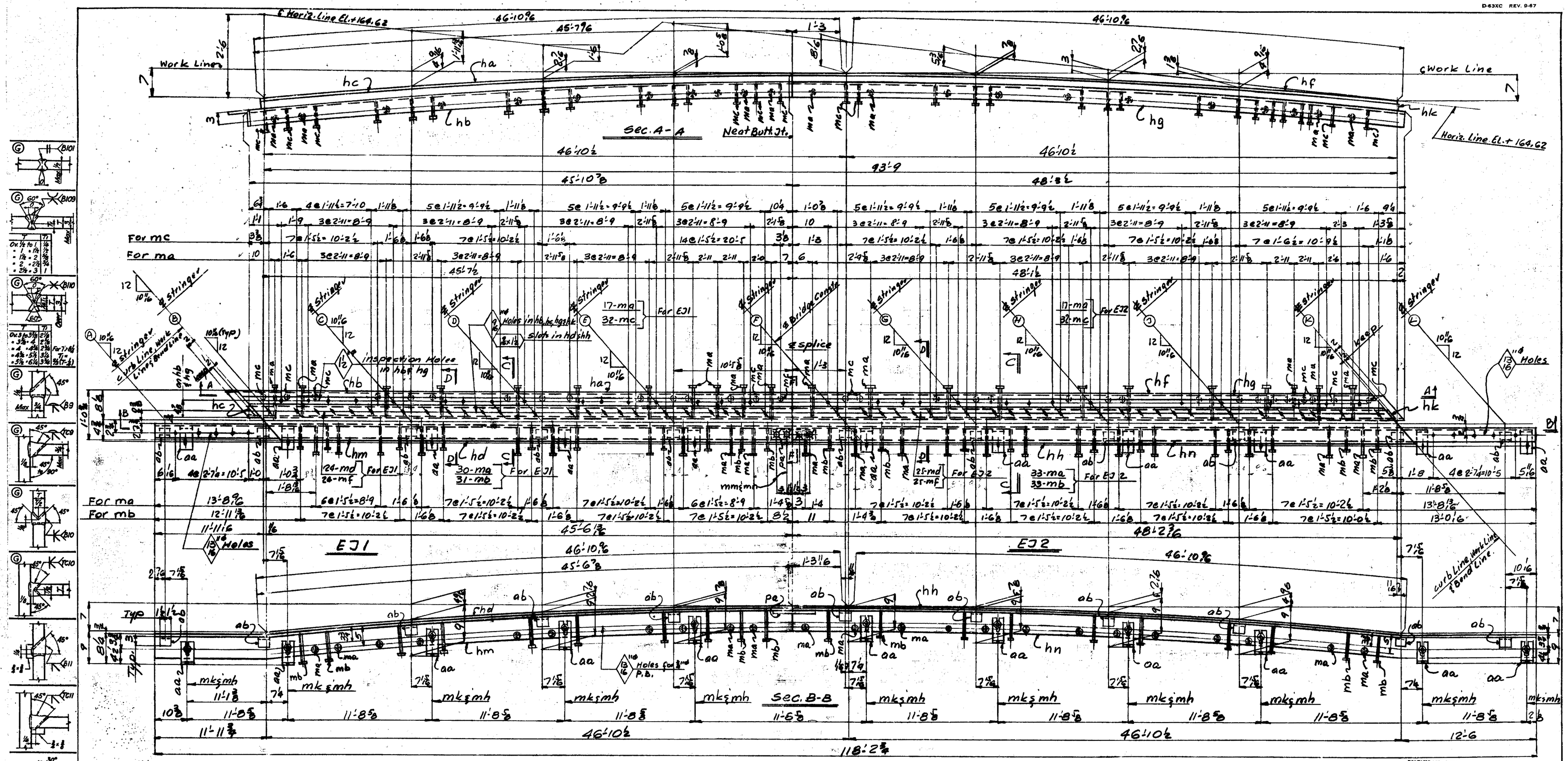

MICHIGAN DEPT. OF STATE HIGHWAYS
BRIDGE X01 OF 82122K
EVERGREEN ROAD OVER I-96
(JEFFRIES FREEWAY)
DETROIT, (WAYNE COUNTY) MICHIGAN

Expansion Joint

USS American Bridge
Division of United States Steel Corporation

FAB.PLT.03
SEQ. CODE 51124

FABRICATION ASSIGNED TO Gary
DRAWING MADE BY Gary 2
MADE BY M.Z. DATE 1/1/63 CHECKED BY ALH DATE 3/13/63
IN CHARGE OF Augenstine #5559

BRIDGE NO. 1C2828 SHEET NO. 8024B

REVISIONS	
F	
E	
D	
C	
B	
A	

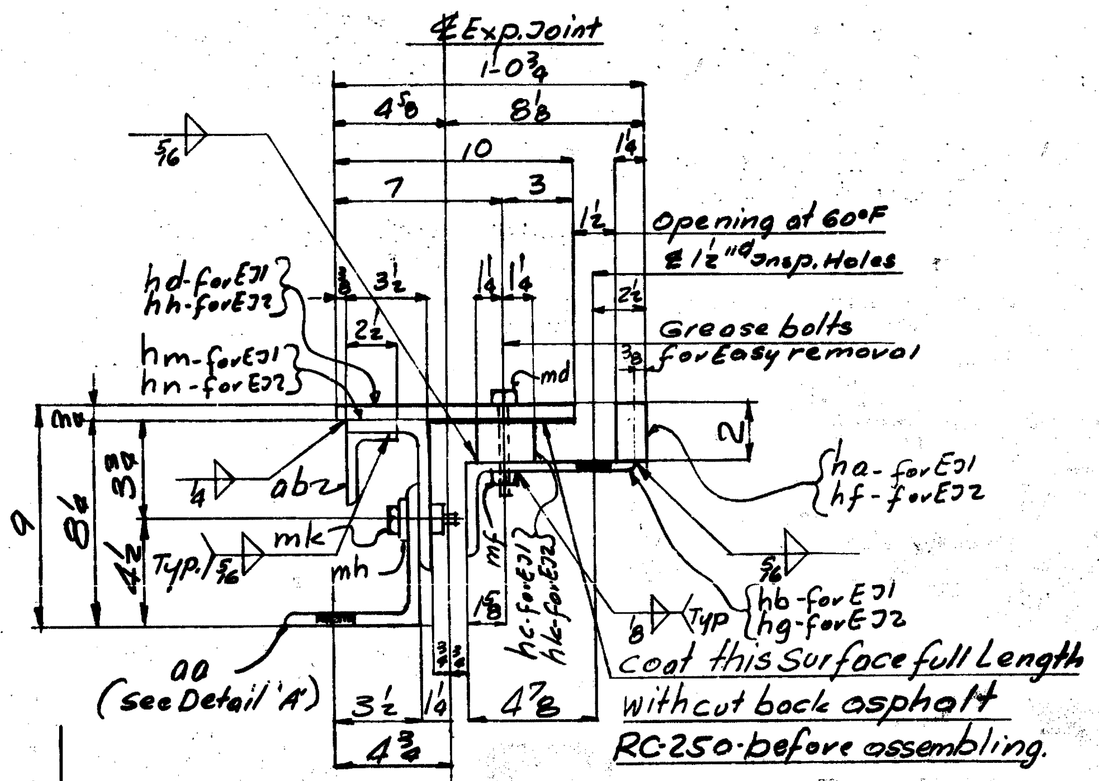

Sec. C-C

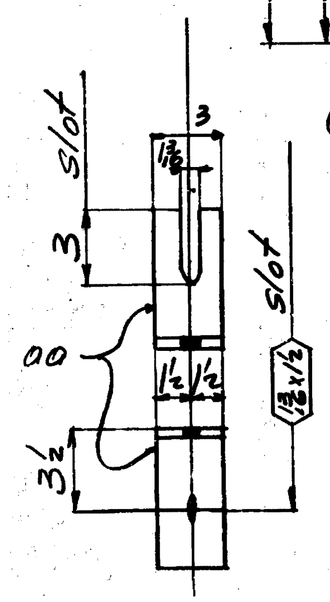

Det. "A"

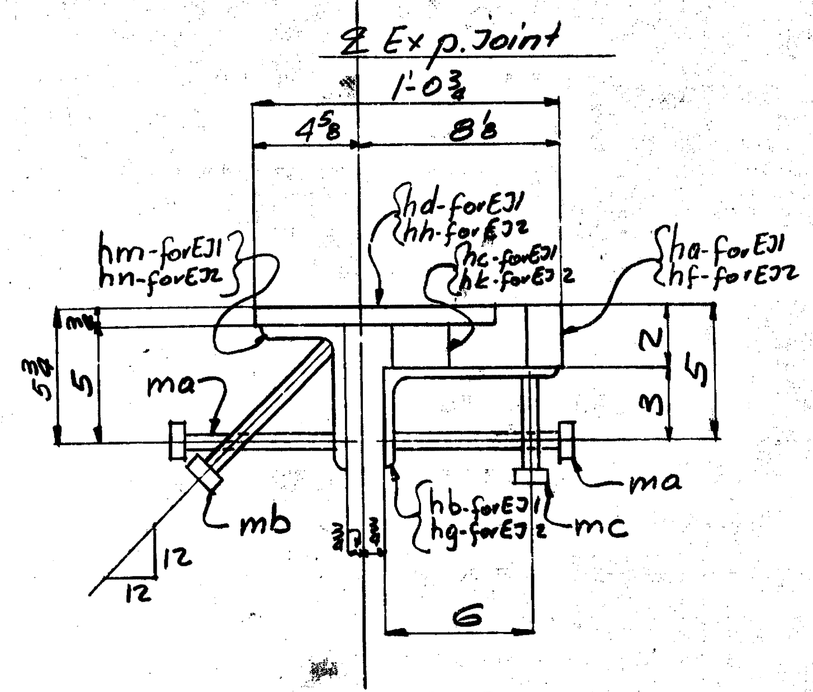

Sec. D-D

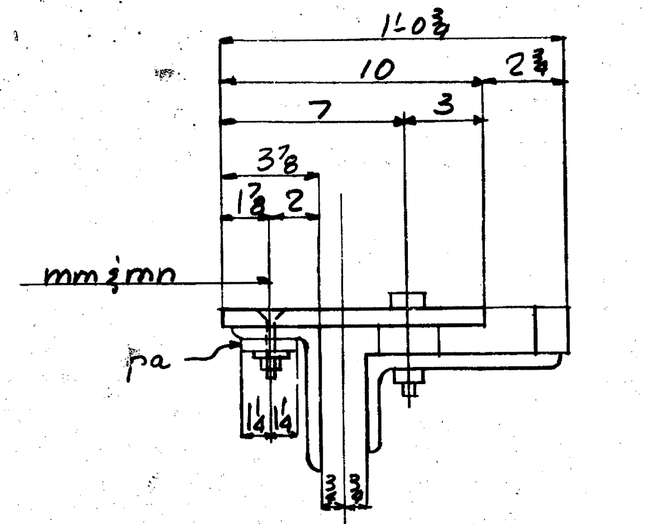

℄ Exp. Joint

Sec. F-F

Gen. Notes:-

Spec:- Mich. State Hwy. Specs. 1967 for Road & Bridge Constr; Special Provisions

Material:- ASTM-A441 Modified Cor. Ten "B" U.N.

Rivets:- None

Open Holes:- As Noted

Welding:- Yes AWS. Spec. for welded Hwy & Railway Bridges.

"Use E70XX Low Hydrogen electrodes or E71-XXXXX or E72-XXXXX Flux and Electrode Combinations"

Paint: None

Shop Contact Surfaces:- No

All steel shall be handled carefully and shall be kept free and clean of all foreign materials such as grease, oil, chalk marks, crayon marks, dirt, etc.

All shipping marks shall be made using a steel die.

The rounding of corners will not be required.

LINE NO.	TOTAL NO. OF PCS. ON ORDER	NO. OF PCS. ON SKETCH	ASSBY. DESC.	MATERIAL DIMENSIONS	LENGTH FEET	LENGTH INCH	FINISH AND TRIM DESC.	FINISH AND TRIM INCH	SHIPPING OR ASSEMBLING MARK	SHIPPING SPECIFICATIONS OR ASSEMBLING REFERENCE	REMARKS	ORDERED	ORDERED ITEM	CALCULATED WEIGHT FOR ONE SHIP PIECE
1														
2		1		EXPANSION JOINT					802EJ1	58'				
3														
4		1	PLT	2 1/4	46	2 3/8	BEND		ha			52-36	PROM	804/11
5		1	L	7 4 3/8	46	5 3/8	BEND		hb			50-1	PROM	804/5
6		1	FLT	2 1/2 1/4	45	11 7/8	BEND		hc		ord 45'-8 3/4	49-11 3/4	PROM	804/9
7		1	PL	10 3/4	46	0 1/4	BEND		hd			AH-14	3029	804/7
8		1	L	6 3 1/2 1/2	57	6 1/2	BEND		hm			40-9 1/2	PROM	804/3
9	11	5	L	6 6 1/2		3			oa			40-0	PROM	111/22
10	11	5	L	3 2 1/2 3/8		3			ob		3x3x3/8 std	30-0	GW	111/23
11	47	47	M	3/4" ø NSB 3/4" std		7			ma		TYPE H4 1 STD	3-57/64		M102/14
12	31	31	M	3/4" ø NSB 3/4" std		8			mb		TYPE H4 1 STD	3-57/64		M102/12
13	32	32	M	3/4" ø NSB 3/4" std		4			mc		TYPE H4 1 STD	3-57/64		M102/11
14	40	24	M	1/2" ø Bolts		3 1/2			md		1/2" std Sq. Hd	3-5/64		M102/7
15	49	24	M	Sq. Nut 1/2" ø Tap					mf		A307	3/4" 3-5/64		M102/7
16	5	5	PB	3/8 HHN		26			mk		A307	5/8	5/8	M102/3
17	5	5	WHN	2 1/4 1/4	1 7/8				mh		A36	5/8	5/8	M102/5
18		1	FLT	2 1/2 1/2		10			pa			1/4 x 30-0	PROM	111/22
19		2	M	3/4" ø Grade NSB							(Equal to			
20				Hex Nut		3			mm		Coiten's	3-57/64		M102/2
21		2	M	1 3/32" x 1/8 Thk							Corr.	5/8	5/8	M102/10
22				1 1/8" ø Hole					mn		Resist.			
23														
24														
25														
26		1		EXPANSION JOINT					802EJ2	61'				
27														
28		1	FLT	2 1/4	47	7	BEND		hf			52-36	PROM	804/10
29		1	L	7 4 3/8	48	5 3/8	BEND		hg				PROM	804/4
30		1	PL	10 3/4	48	5 1/4	BEND		hh		3x3x 1/4 x 4		PROM	804/6
31		1	FLT	2 1/2 1/4	48	1/4	BEND		hk				PROM	804/8
32		1	L	6 3 1/2 1/2	60	2 1/2	BEND		hn				PROM	804/2
33		6	L						aa					
34		6	L						ab					
35		50	M						ma					
36		33	M						mb					
37		32	M						mc					
38		25	M						md					
39		25	M						mf					
40		6	PB						mk					
41		6	WHN						mh					
42														
43														
44														
45														
46		20		Support Bars					802M1					
47		20	PLT	2 3/8		10					Plotted Sketch		IS	111/25
48														
49														
50														
51														
52														
53														
54														
55														
56														
57														
58														
59														
60														
61														
62														

K-2828

MICHIGAN DEPT. OF STATE HIGHWAYS
BRIDGE X01 OF 82122K
EVERGREEN ROAD OVER I-96
(JEFFRIES FREEWAY)
DETROIT, (WAYNE COUNTY) MICHIGAN

Expansion Joint

American Bridge
Division of United States Steel Corporation

FABRICATION ASSIGNED TO: Gary
DRAWING MADE BY: Gary #2
MADE BY: M.Z. DATE: 1/24/62 CHECKED BY: ALH DATE: 3/27/62
IN CHARGE OF: Augenstine #5559

ORDER NO.: K-2828
SHEET NO.: 802B

FAB. PLT. 03 | SEQ. CODE 56124
SEQ. | NO. CHGS. | COST CENTERS PROD. | NON PROD. | PAY BASIS CODE 5/0
WEIGHT | EXCEPTION REV. NO. | SHIP DIVISION | LINE CONTROL 35

REVISIONS: F, E, D, C, B, A

FOR LOCATION OF SHIPPING PIECES SHOWN ON THIS SHEET REFER TO ERECTION PLANS: E9 E7

ADV. BILL

25/37H A. & B. SMITH PGH., PA. M-8890-566

D-81XC REV. 566

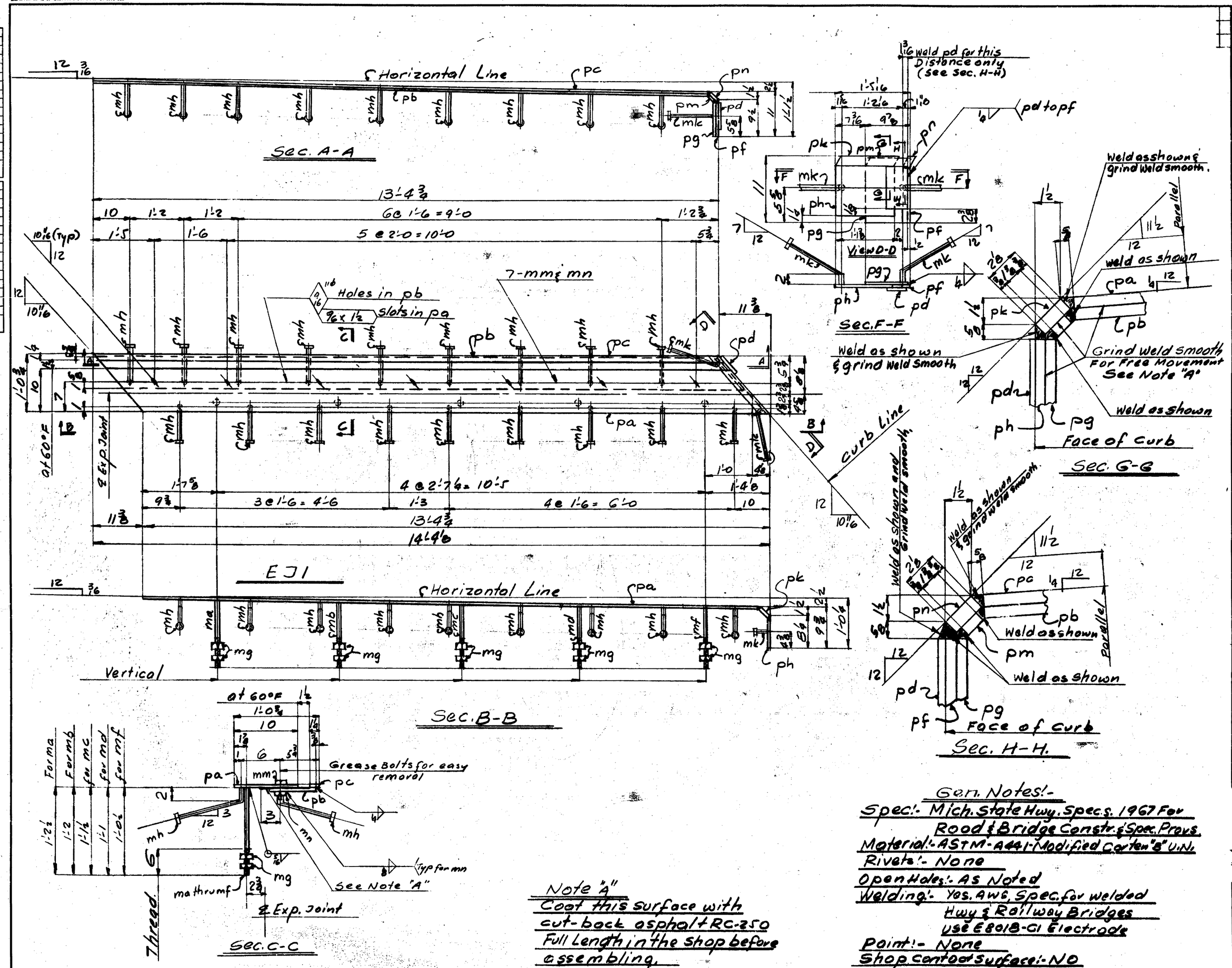

Note "A"
Coat this surface with cut-back asphalt RC-250 Full Length in the shop before assembling.

Gen. Notes:-
Spec:- Mich. State Hwy. Specs. 1967 For Road & Bridge Constr. & Spec. Provs.
Material:- ASTM-A441-Modified Corten "B" U.N.
Rivets:- None
Open Holes:- As Noted
Welding:- Yes. AWS, Spec. for welded Hwy & Railway Bridges
Use E8018-C1 Electrode
Paint:- None
Shop contact surface:- NO

LINE NO.	TOTAL NO. OF PCS. ON ORDER	MATERIAL: NO. OF PCS. ON SECTION	MATERIAL: ASSBY. DESC.	MATERIAL: DIMENSIONS	MATERIAL: LENGTH FEET	MATERIAL: LENGTH INCH	FINISH AND TRIM: DESC.	FINISH AND TRIM: INCH	SHIPPING OR ASSEMBLING MARK	SHIPPING SPECIFICATIONS OR ASSEMBLING REFERENCE	REMARKS	ORDERED	ITEM	CALCULATED WEIGHT FOR ONE SHIP PIECE
1														
2		1		EXPANSION JOINT						805E21				
3														
4		1	PL	10 x 1/4	13	10 3/8			pg			3/4" x 14-3/4	M270	806/15
5		1	FLT	7 x 1/4	13	8 1/8			pb			1/4" x 30-0	M119	806/21
6		1	FLT	1/4 x 1/4	13	3			pc				M119	806/18
7		1	FLT	5 1/8 x 1/4		6 1/8			pd			4 1/2" x 3-0	GW	806/12
8		1	FLT	1'-6 x 1/4		8 1/8			pf				M119	806/14
9		1	PL	9 3/8 x 1/4		8 1/8			pg				M119	806/14
10		1	PL	13 3/8 x 1/2		7 1/8			ph			8 1/2" x 26-3/4	M270	806/13
11		1	FLT	2 1/8 x 1/16	1	2 1/16			pk		FIN 3/4" tk			
12		1	FLT	1 3/8 x 1/2		10 1/4			pm				M119	806/20
13		1	FLT	2 1/8 x 1/16		3			pn		FIN 3/4" tk		M119	806/17
14		1	RD	3/4	1	2 1/2			ma		A36	MACH SMOOTH		
15		1	RD	3/4	1	2			mb		A36			
16		1	RD	3/4	1	1 1/2			mc		A36			
17		1	RD	3/4	1	1			md		A36			
18		1	RD	3/4	1	0 1/2			mf		A36			
19		10	M	Std. Sq. Nut - 3/4" Top					mg		A307			
20		18	M	3/4" Hexagon Head Bolts		11	BEND		mh		Type H4 ASTM	3-5/16 x 6-5		M103/13
21		2	M	3/4" Hex. Nut & Washer	1	2	BEND		mk		Type H4 ASTM	3-5/16 x 6-5		M103/8
22		7	M	3/4" Bolts		2			mm		Sq. Hd.	3-5/16 x 6-5		M103/8
23		7	M	Sq. Nut - 3/4" Top					mn		A307	3-5/16 x 3-5		M103/8
24														
25														
26														
27														
28														
29														
30														
31														
32														
33														
34														
35														
36														
37														
38														
39														
40														
41														
42														
43														
44														
45														
46														
47														
48														
49														
50														
51														
52														
53														
54														
55														
56														
57														
58														
59														
60														
61														
62														

K-2828

All steel shall be handled carefully and shall be kept free and clean of all foreign materials such as grease, oil, chalk marks, crayon marks, dirt, etc.
All shipping marks shall be made using a steel die.
The rounding of corners will not be required.

MICHIGAN DEPT. OF STATE HIGHWAYS
BRIDGE X01 OF 82122K
EVERGREEN ROAD OVER I-96
(JEFFRIES FREEWAY)
DETROIT, (WAYNE COUNTY) MICH.GAN

EXPANSION JOINT

USS American Bridge
Division of United States Steel Corporation

FAB PLT. 03 | SEQ. CODE 5U125
BASO | NO. OF PCS. | COST CENTERS: PROD. | NON PROD. | PAY RAS-S CODE 560
WEIGHT REV. NO. | EXCEPTION SHIP DIVISION | LAST CONTROL 21

F	
E	
D	
C	
B	
A	

REVISIONS

FABRICATION ASSIGNED TO Gary
DRAWING MADE BY Gary #2
MADE BY M.Z. DATE 1/29/69 CHECKED BY ALH DATE 3/13/69
IN CHARGE OF Augenstine #5559

FOR LOCATION OF SHIPPING PIECES SHOWN ON THIS SHEET REFER TO ERECTION PLANS: E9

ORDER NO. K2828

SHEET NO. 803

ADV. BILL

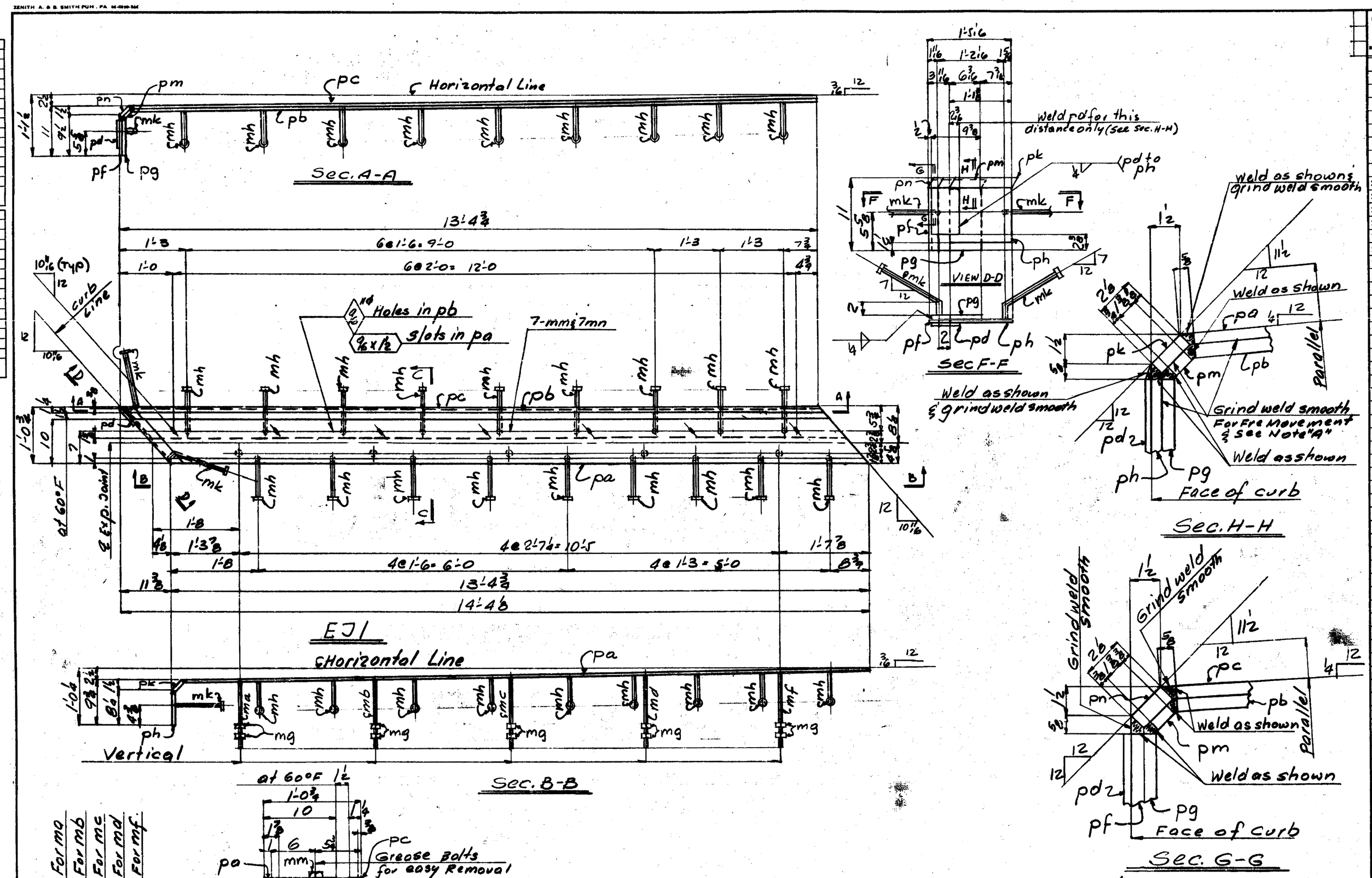

LINE NO.	TOTAL NO. OF PCS. OR ORDER	MATERIAL: NO. OF PCS. OR MOTOR	ABBRV. DESC.	DIMENSIONS	LENGTH FEET	LENGTH INCH	FINISH AND TRIM DESC.	INCH	SHIPPING OR ASSEMBLING MARK	SHIPPING SPECIFICATIONS OR ASSEMBLING REFERENCE	REMARKS	ORDERED	ITEM	CALCULATED WEIGHT FOR ONE SHIP PIECE
1														
2		1		EXPANSION JOINT					BOAEJ1					
3														
4		1	PL	10 1/2		13 10 1/2			pa			23 1/4 X 1-0 1/4 X 30-6	19070	804/15
5		1	FLT	7 1/2		13 8 1/8			pb				19070	804/1
6		1	FLT	1 1/4 1/2		13 3			pc				99137	804/18
7		1	FLT	5 5/8 1/4		6 1/2			pd			HEX 8-0	99137	804/12
8		1	FLT	1 1/16 1/2		8 3/4			pf				99137	804/10
9		1	PL	9 3/4 1/2		5 3/8			pg				99137	804/19
10		1	PL	13 3/4 1/2		7 3/8			ph			5 5/8 X 24-3/4	19070	804/13
11		1	FLT	2 1/2 7/16		1 2 1/2			pk		FIN 3/4" 1/4		IS	
12		1	FLT	1 3/4 1/2		1 6 1/4			pm				99137	804/20
13		1	FLT	2 1/2 7/16		3			pn		FIN 3/4" 1/4		IS	
14		1	RD	3/4		1 0 1/2			mg		A36	MECH SHOP		
15		1	RD	3/4		1 1			mb		A36			
16		1	RD	3/4		1 1 1/2			mc		A36			
17		1	RD	3/4		1 2			md		A36			
18		1	RD	3/4		1 2 1/2			mf		A36			
19		10	M	Std. Sq. Nut 5/8" Top					mg		A307			
20		18	M	3 1/4" 5/8" Hex Std.		11	BZ10		mh		Std. Type 1 or 2 H4	3.57 lbs		M103/12
21		2	M	3 1/4" 5/8" Hexagon Std.		1 2	BZ10		mk		Std. Type 1 or 2 H4	3.57 lbs		M103/18
22		7	M	5/8" Both		2			mm		Std. Type 1 or 2 H4	3.57 lbs		M102/18
23		7	M	Sq. Nut 5/8" Top					mn		A307	3.34 lbs		M102/18

K-2828

All steel shall be handled carefully and shall be kept free and clean of all foreign materials such as grease, oil, chalk marks, crayon marks, dirt, etc.

All shipping marks shall be made using a steel die.

The rounding of corners will not be required.

MICHIGAN DEPT. OF STATE HIGHWAYS
BRIDGE X01 OF 82122K
EVERGREEN ROAD OVER I-96
(JEFFRIES FREEWAY)
DETROIT, (WAYNE COUNTY) MICHIGAN

Gen. Notes:-
Spec:- Mich. State Hwy. Specs. 1967 For Roads & Bridge Constr. & Spec. Provs.
Material:- ASTM-A441-Modified Corten "B" U.N.
Rivets:- None
Open Holes:- As Noted
Welding:- Yes. AWS Spec. for welded Hwy & Railway Bridges
Use E8018-C1 Electrode
Paint:- None
Shop Contact Surface:- NO

Note "A"
Coat this surface with cut-back asphalt RC-250 Full length in the shop before assembling.

USS American Bridge
Division of United States Steel Corporation

EXPANSION JOINT

FAB. PLT. 03 | STD. CODE 8/12/60

NO.	COST CENTERS PROD.	NON PROD.	PAY BASIS CODE
B S D G R			56

WEIGHT REV. NO. | EXCEPTION SHIP DIVISION | LINE CONTROL 21

F	
E	
D	
C	
B	
A	

REVISIONS

FABRICATION ASSIGNED TO Gary
DRAWING MADE BY Gary #2
MADE BY M.Z. DATE 1/30/68 CHECKED BY ALH DATE 3/12/68
IN CHARGE OF Augenstine # 555

FOR LOCATION OF SHIPPING PIECES SHOWN ON THIS SHEET REFER TO ERECTION PLANS. E9

ORDER NO. K2828 | SHEET NO. 804

ADV. BILL

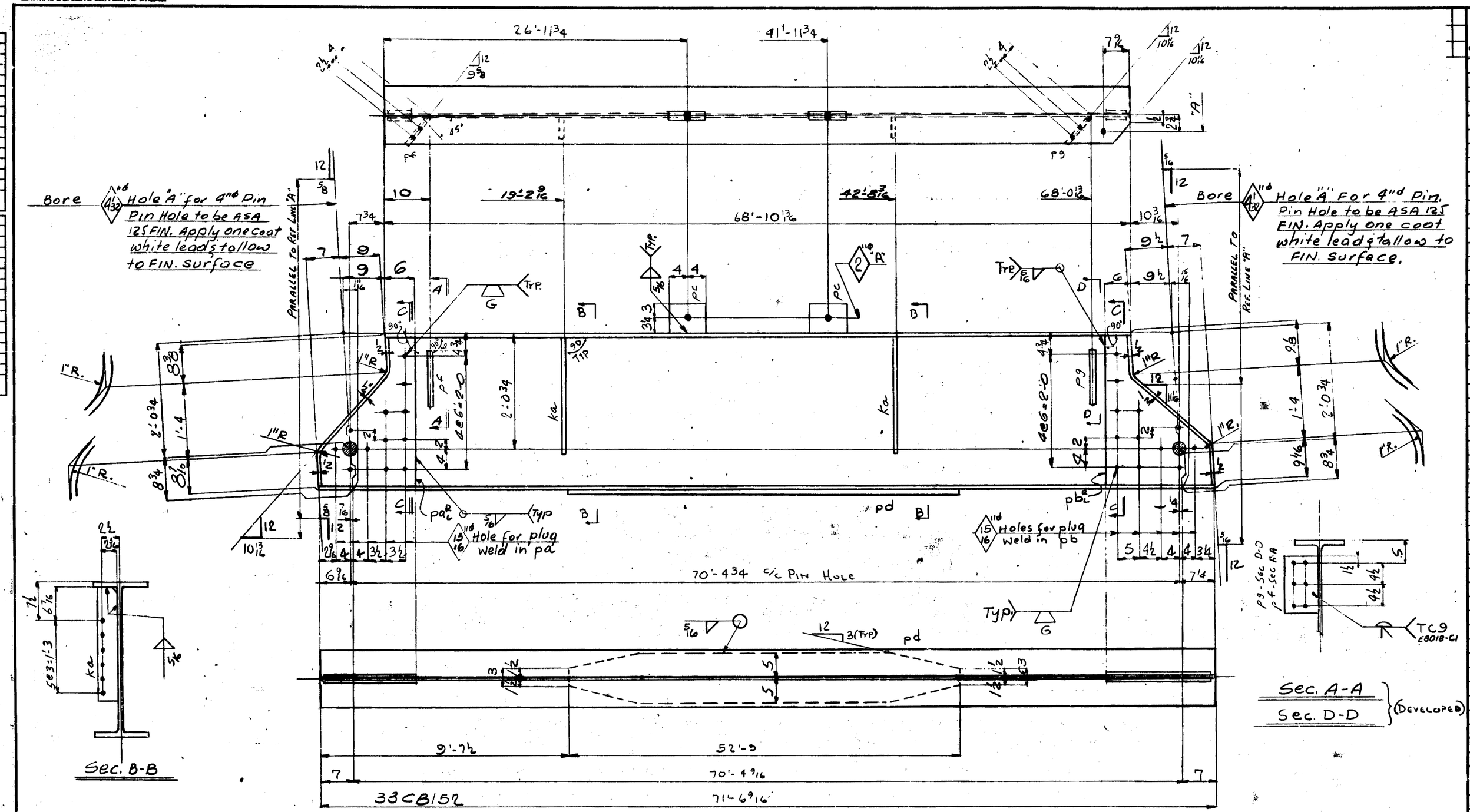

Gen. Notes:-
Spec:- Michigan state Specs. 1967-For Road & Bridge Construction & Special Provisions.
Material:- ASTM-A441 MOD [Cor. Ten "B"] U.N.
Open Holes:- ¾" ϕ U.N.
Welding:- AWS & Special Provisions
"USE E70XX Low Hydrogen Electrodes or F71-XXXXX CE F70X-XXXX Flux and Electrode Combinations" U.N.
OPEN HOLES - ARE FOR HIGH STRENGTH STRUCTURAL BOLTS U.N. 'A'
PAINT - NO
SHIPS - 15'-7½" TYP

CAMBER NOTE: CAMBER IS TO BE MEASURED WITH THE BEAM LYING ON ITS SIDE. ALLOWABLE CAMBER TOLERANCE IS ±¼". HEAT IS TO BE USED, IF NECESSARY, TO ASSURE CAMBER PERMANENCY WITHIN THE 90° CHANCE.

[illegible] shall be handled carefully and [illegible] free and clean of all foreign [illegible] oil, chalk marks, [illegible]

The far side of B1 and the near side of [illegible] including the complete bottom flange, shall be blast cleaned in accordance with Steel Structures Painting Council Surface Preparation Specifications "No. 10 Near-White Blast Cleaning", SSPC-SP10-63 as soon after fabrication as possible.

LINE NO.	TOTAL NO. OF PCS. IN SHIP PIECE	MATERIAL: NO. OF PCS. IN SECTION	ADDIT. DESIG.	DIMENSIONS		LENGTH FEET	LENGTH INCHES	FINISH AND TRIM DESIG.	FINISH AND TRIM INCHES	SHIPPING IN ASSEMBLING MARK	SHIPPING SPECIFICATIONS IN ASSEMBLING REFERENCE	REMARKS	ORDERED:		CALCULATED WEIGHT FOR ONE SHIP PIECE
1															
2															
3		1	BEAM							805B1	72'				
4															
5		1	CB	33	152	71	7						71-9¾	8022	50 1/02
6		2	PL	20½	5/8	2	7¼			pa^R		27"x2-7¼ 6013 2 / 26¾"x2-7¼ 6013 2	80¾"x 26-9¾	49107	2 80 1/28
7		2	PL	23¾	5/8	2	7¼			pb^L				49107	J
8		2	PL	6¼	½		8			pc		A36		15	S
9		1	PL	10	1¼	52	3			pd			10x1¼ 50-3	8027	50 1/02
10		1	FLT	7½	½	1	0	BEV		pf			8x½ 30-0	49137	2 80 1/26
11		1	FLT	7½	½	1	0			pg				49137	J
12		2	FLT	3½	½	1	11	TIE		ka			16-4	49005	50 1/29

K2828

MICHIGAN DEPT. OF STATE HIGHWAYS
BRIDGE X01 OF 82122BK
EVERGREEN ROAD OVER I-96
(JEFFRIES FREEWAY)
DETROIT, (WAYNE COUNTY) MICHIGAN

Beam 'A' & Span #14

American Bridge Division of United States Steel

FABRICATION ASSIGNED TO: Gary
DRAWING MADE BY: Gary #2
MADE BY: J DATE 2-69 CHECKED BY: AW DATE 3/12/69
IN CHARGE OF: Augenstine #5559

FAB. PLT. C3 | REQ. COMP. 5/6/27

SEQ.	NO. OF PCS.	COST CENTERS PROD.	NON PROD.	PAY BASIS CODE
D				5/6
C				
B				
A				

WEIGHT REV. NO. | EXCEPTION SHIP DIVISION | LINE CONTROL 9

F	
E	
D	
C	
B	
A	

REVISIONS

FOR LOCATION OF SHIPPING PIECES SHOWN ON THIS SHEET REFER TO ERECTION PLANS: E9

ORDER NO. K2828 | SHEET NO. 805

ADV. BILL 801

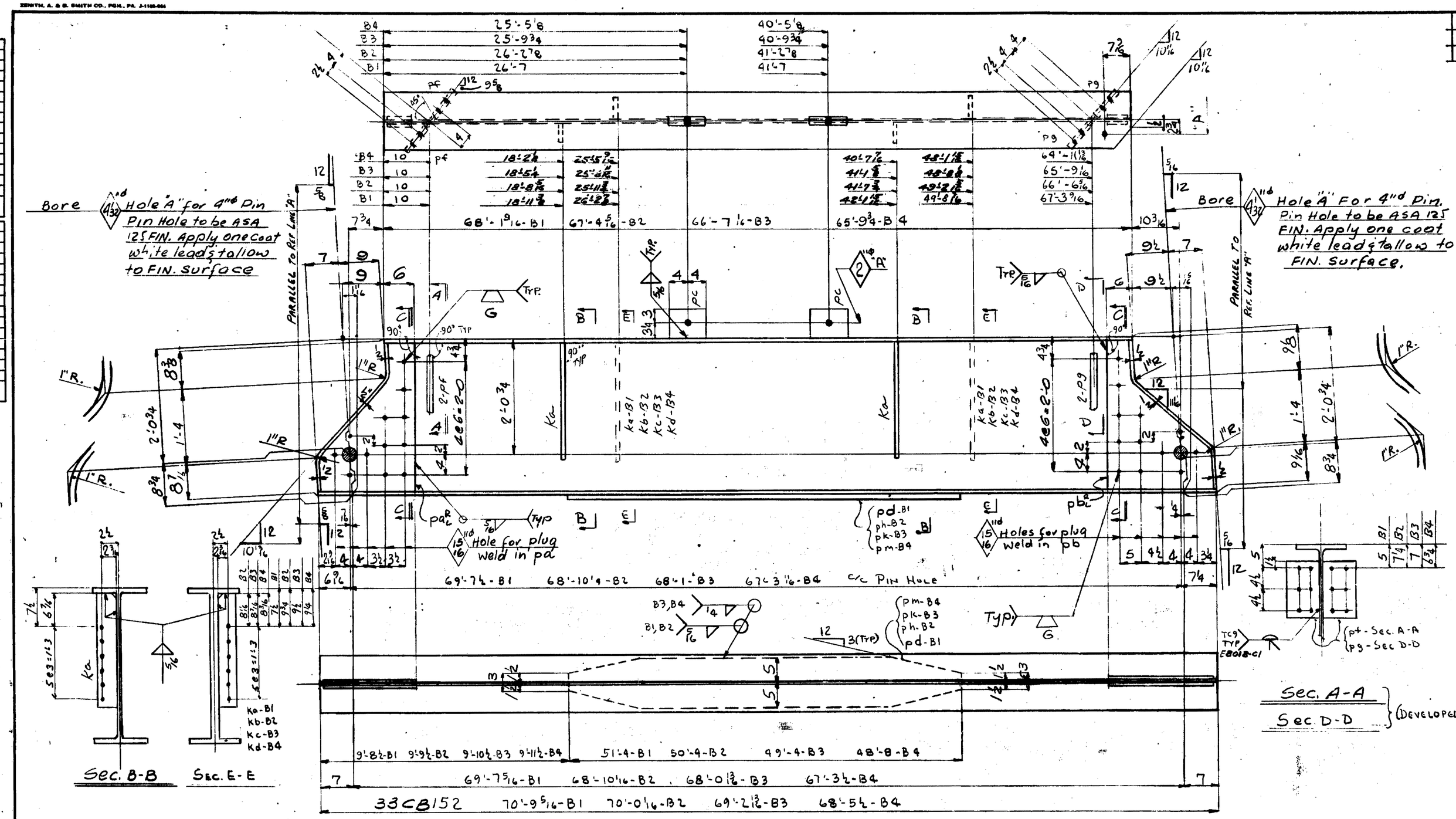

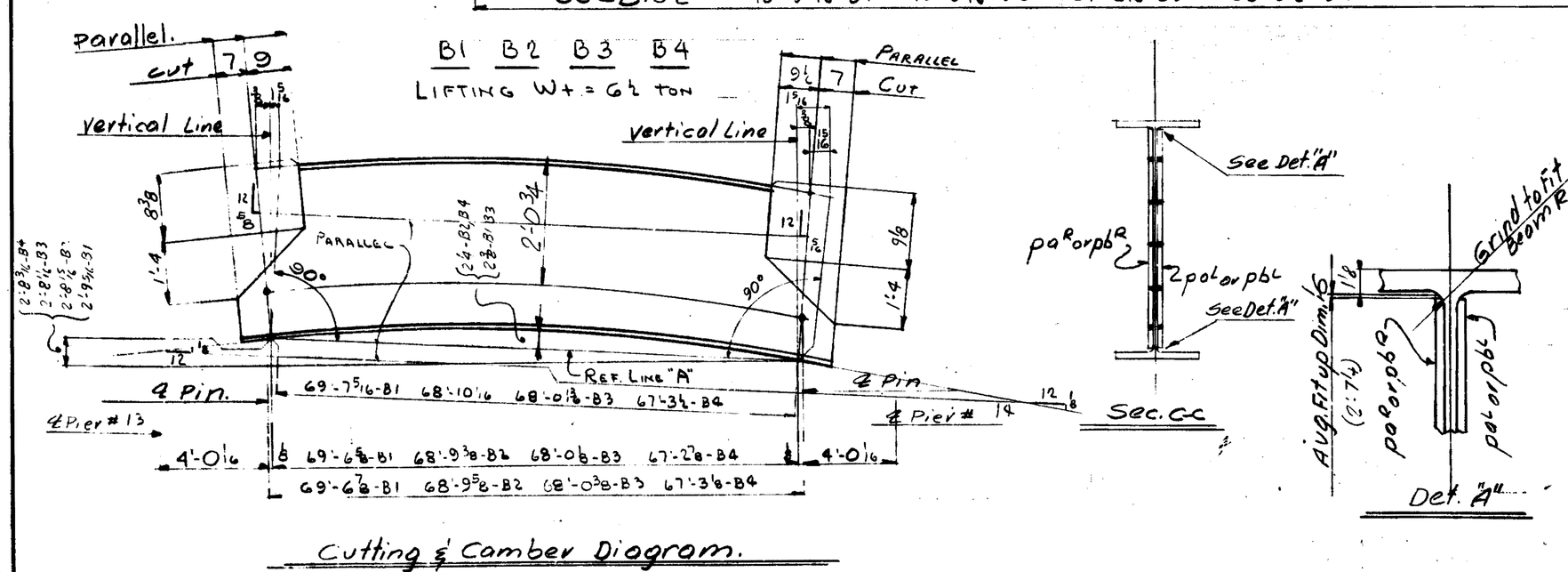

Gen. Notes:-
Spec:- Michigan state Specs. 1967 - For Road & Bridge Construction & special Provisions.
Material:- ASTM-A441 MOD [Cor-Ten "B"] U.N.
Open Holes:- 13/16" U.N.
Welding:- AWS & special Provisions
"USE E70XX LOW HYDROGEN ELECTRODES OR F71-XXXXX CE F72-XXXXX FLUX AND ELECTRODE COMBINATIONS" U.N.
OPEN HOLES - ARE FOR HIGH STRENGTH STRUCTURAL BOLTS U.N. "A"
PAINT - NO
SHIPS - 14'-0" x 12'-0" TYP

CAMBER NOTE: CAMBER IS TO BE MEASURED WITH THE BEAM LYING ON ITS SIDE. ALLOWABLE CAMBER TOLERANCE IS ±¼". HEAT IS TO BE USED, IF NECESSARY, TO ASSURE CAMBER PERMANENCY WITHIN THE TOLERANCE.

[illegible] shall be handled carefully and [illegible] free and clean of all foreign [illegible] as grease, oil, chalk marks, [illegible]

LINE NO.	TOTAL NO. OF PCS. ON MARK	NO. OF PCS. ON SHEET	MARK	MATERIAL DIMENSIONS		LENGTHS FEET	INCH	FINISH AND TRIM DESIG.	INCH	SHIPPING OR ASSEMBLING MARK	SHIPPING SPECIFICATIONS OR ASSEMBLING REFERENCE	REMARKS	ORDERED		CALCULATED WEIGHT FOR ONE SHIP PIECE
1															
2		1		BEAM						806B1	71'				
3															
4		1	CB	33	152	70	9½						71-0½	8021	80/64
5	4½	2	PL	20½	5/8	2	7½			pa R		27 x 2-7/16 C=3 L	20½ x 2 1/2	8101	280/24
6	4½	2	PL	23¼	5/8	2	7½			pb L		29½ x 2 7/16 C=3 L		8101	
7	8	2	PL	6	½		8			pc		A36		18	S
8		1	PL	10	1 1/8	51	4			pd		Cov. R	10 x 51-4	8121	80/65
9	8	2	FLT	7½	½	1	0	BED		pf			8 x 3-0	8131	280/26
10	8	2	FLT	7½	½	1	0			pg				8131	
11	10	4	FLT	3½	½	1	11	TIE		ka			3½ x 1-11	8000	80/28 ½
12															
13															
14															
15		1		BEAM						806B2	70'				
16															
17		1	CB	33	152	70	0½						70-3¼	8020	80/66
18		2	PL							pa L					280/28
19		2	PL							pb L					
20		2	FLT							pc					S
21		1	PL	10	1 1/8	50	4			ph		Cov. R	31½ x 50-4	8030	80/67
22		2	FLT					BED		pf					280/26
23		2	FLT					BED		pg					
24		2	FLT					TIE		ka					80/24
25		2	FLT	3½	½	2	1 4	TIE		kb			3½ x 1-4	8000	80/25
26															
27															
28															
29		1		BEAM						806B3	69'				
30		1	CB	33	152	69	3¼						68-6	8019	80/67
31		2	PL							pa R					280/28
32		2	PL							pb L					
33		2	FLT							pc					S
34		1	PL	10	¾	49	4			pk		Cov. R	31½ x 49-4	8032	80/69
35		2	FLT					BED		pf					280/26
36		2	FLT					BED		pg					
37		2	FLT					TIE		ka					80/24
38		2	FLT	3½	½	2	1	TIE		kc				8000	80/25
39															
40															
41															
42		1		BEAM						806B4	69'				
43															
44		1	CB	33	152	68	5½						68-8¾	8018	80/10
45		2	PL							pa R					280/28
46		2	PL							pb L					
47		2	FLT							pc					S
48		1	PL	10	¾	48	8			pm		Cov. R	31½ x 48-8	8030	80/11
49		2	FLT					BED		pf					280/26
50		2	FLT					BED		pg					
51		2	FLT					TIE		ka					80/24
52		2	FLT	3½	½	2	0¾	TIE		kd				8000	80/25
53															
54															
55															
56															
57															
58															
59															
60															
61															
62															

K2828

MICHIGAN DEPT. OF STATE HIGHWAYS
BRIDGE X01 OF 82123K
EVERGREEN ROAD OVER I-96
(JEFFRIES FREEWAY)
DETROIT, (WAYNE COUNTY) MICHIGAN

Beam & Span # 14

American Bridge Division of United States Steel

FAB. PLT. C3 | NO. COPS. 5/16/28

BEND	NO. CYCLES	PROD.	COST CENTERS NON PROD.	PAT BARS CONS.
				F/6

WEIGHT REV. NO. | EXCEPTION SHIP DIVISION | LINE CONTROL 39

F	
E	
D	
C	
B	
A	

REVISIONS

FOR LOCATION OF SHIPPING PIECES SHOWN ON THIS SHEET REFER TO ERECTION PLANS: E9

FABRICATION ASSIGNED TO: Gary
DRAWING MADE BY: Gary #2
MADE BY: J DATE: 2-69 CHECKED BY: ALH DATE: 3/12/69
IN CHARGE OF: Augenstine #5559

ORDER NO. K2828 | SHEET NO. 806

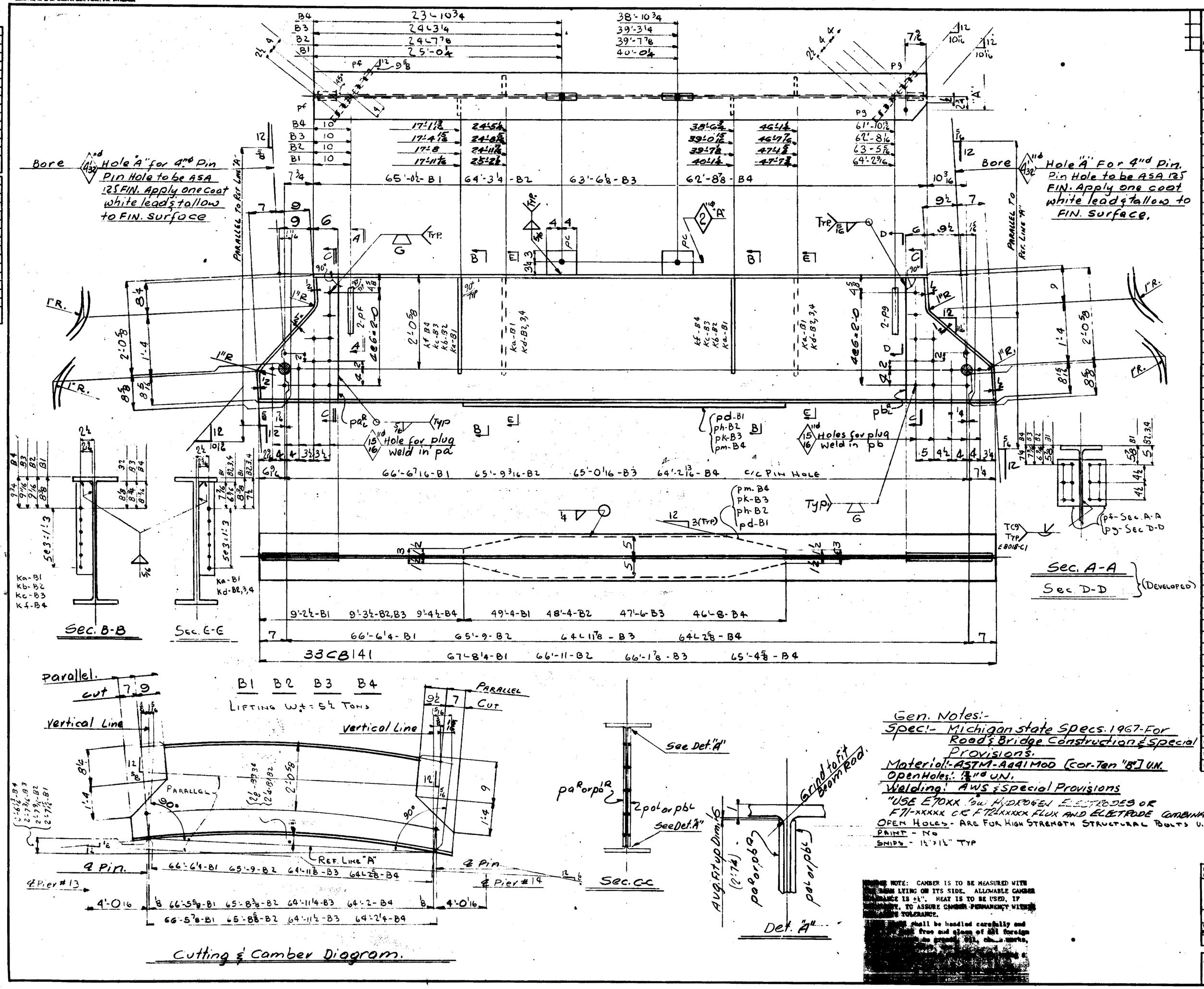

Line No.	Total No. of Pcs. on Marks	No. of Pcs. on Order	Mark Desig.	Material	Dimensions	Length Feet	Length Inches	Finish and Trim Desig.	Finish and Trim Shop	Shipping as Assembling Mark	Shipping Specifications or Assembling Reference	Remarks	Ordered	Item	Calculated Weight for One Ship Piece
1															
2		1		Beam						807B1	69'				
3															
4		1	CB	33	141	67	8½						67-11½	2006	201/12
5	PL	2	PL	10½	⅝	2	7¼			pa^R		2-7-2-7¼	8-3½X 42-7¼	2007	2 201/28
6	PL	2	PL	6¾	⅝	2	7¼			pb^R		2-7-2-7¼	2-3½X 2-7¼	2008	
7	8	2	PL	6⅛	½		8			pc			3 36	IR	S
8		1	PL	10	¾	49	4			pd		Cov. PL	3133X 49-4	3032	201/13
9	8	2	FLT	7½	½	1	0	BIED		pf			8½X 30-0	2037	2 201/26
10	8	2	FLT	7½	½	1	0			pg					
11		4	FLT	3½	½	2	0	TIE		Ka			3½X 16-4	2006	201/25
12															
13															
14															
15		1		Beam						807B2	67'				
16															
17		1	CB	33	141	66	11⅞						67-24	2015	201/19
18		2	PL							pa^R					2 201/28
19		2	PL							pb^R					
20		2	FLT							pc					S
21		1	PL	10	¾	48	4			ph		Cov. PL	3114X 48-8	3030	201/15
22		2	FLT					BIED		pf					2 201/26
23		2	FLT							pg					
24		2	FLT	3½	½	2	0¾	TIE		Kb				2006	201/25
25	16	2	FLT	3½	½	1	11	TIE		Kd			3½X 16-4	2006	201/24
26															
27															
28															
29		1		Beam						807B3	66'				
30		1	CB	33	141	66	2⅞						66-5¾	2014	201/16
31		2	PL							pa^R					2 201/28
32		2	PL							pb^R					
33		2	FLT							pc					S
34		1	PL	10	¾	47	6			pk		Cov. PL	2114X 47-6	2028	201/17
35		2	FLT					BIED		pf					2 201/26
36		2	FLT							pg					
37		2	FLT	3½	½	2	14	TIE		Kc				2006	201/25
38		2	FLT					TIE		Kd					201/24
39															
40															
41															
42		1		Beam						807B4	65'				
43															
44		1	CB	33	141	65	4½						65-8	2013	201/18
45		2	PL							pa^R					2 201/28
46		2	PL							pb^R					
47		2	FLT							pc					S
48		1	PL	10	⅝	46	8			pm		Cov. PL	2114X 46-8	2026	201/19
49		2	FLT					BIED		pf					2 201/26
50		2	FLT							pg					
51		2	FLT					TIE		Kd					201/25
52		2	FLT	3½	½	2	1¾	TIE		Kf				2006	201/24
53															
54															
55															
56															
57															
58															
59															
60															
61															
62										(K2B2B)					

Gen. Notes:-
Spec:- Michigan state Specs. 1967-For Road & Bridge Construction & Special Provisions.
Material:- ASTM-A441 MOD [Cor-Ten "B"] U.N.
Open Holes:- ⅞" rd U.N.
Welding:- AWS & Special Provisions
"USE E70XX low HYDROGEN ELECTRODES OR F71-XXXXX CC F72-XXXXX FLUX AND ELECTRODE COMBINATIONS" U.N.
OPEN HOLES - ARE FOR HIGH STRENGTH STRUCTURAL BOLTS U.N. "A"
PAINT - No
SNIPS - 1½"x1½" TYP

[illegible] NOTE: CAMBER IS TO BE MEASURED WITH [illegible] LYING ON ITS SIDE. ALLOWABLE CAMBER [illegible] IS ±¼". HEAT IS TO BE USED, IF [illegible] TO ASSURE CAMBER PERMANENT WITH[illegible] TOLERANCE.
[illegible] shall be handled carefully and [illegible] free and clean of all foreign [illegible] grease, oil, [illegible] marks, [illegible]

MICHIGAN DEPT. OF STATE HIGHWAYS
BRIDGE X01 OF 82122K
EVERGREEN ROAD OVER I-96
(JEFFRIES FREEWAY)
DETROIT, (WAYNE COUNTY) MICHIGAN

Beam & Span #14

American Bridge Division of United States Steel

Fabrication assigned to: Gary
Drawing made by: Gary #2
Made by: J Date: 2-6-9 Checked by: ALH Date: 3/12/68
In charge of: Augenstine #5559

Fab. Pt. 03 Sec. Code 516129
Cost Centers: Prod. | Non Prod. | Pay Bank Code
Weight | Exception | Rev. No. | Ship Division | Line Control 39
Revisions: F, E, D, C, B, A

For location of shipping pieces shown on this sheet refer to erection plans: E9

Order No. K2B2B
Sheet No. 807