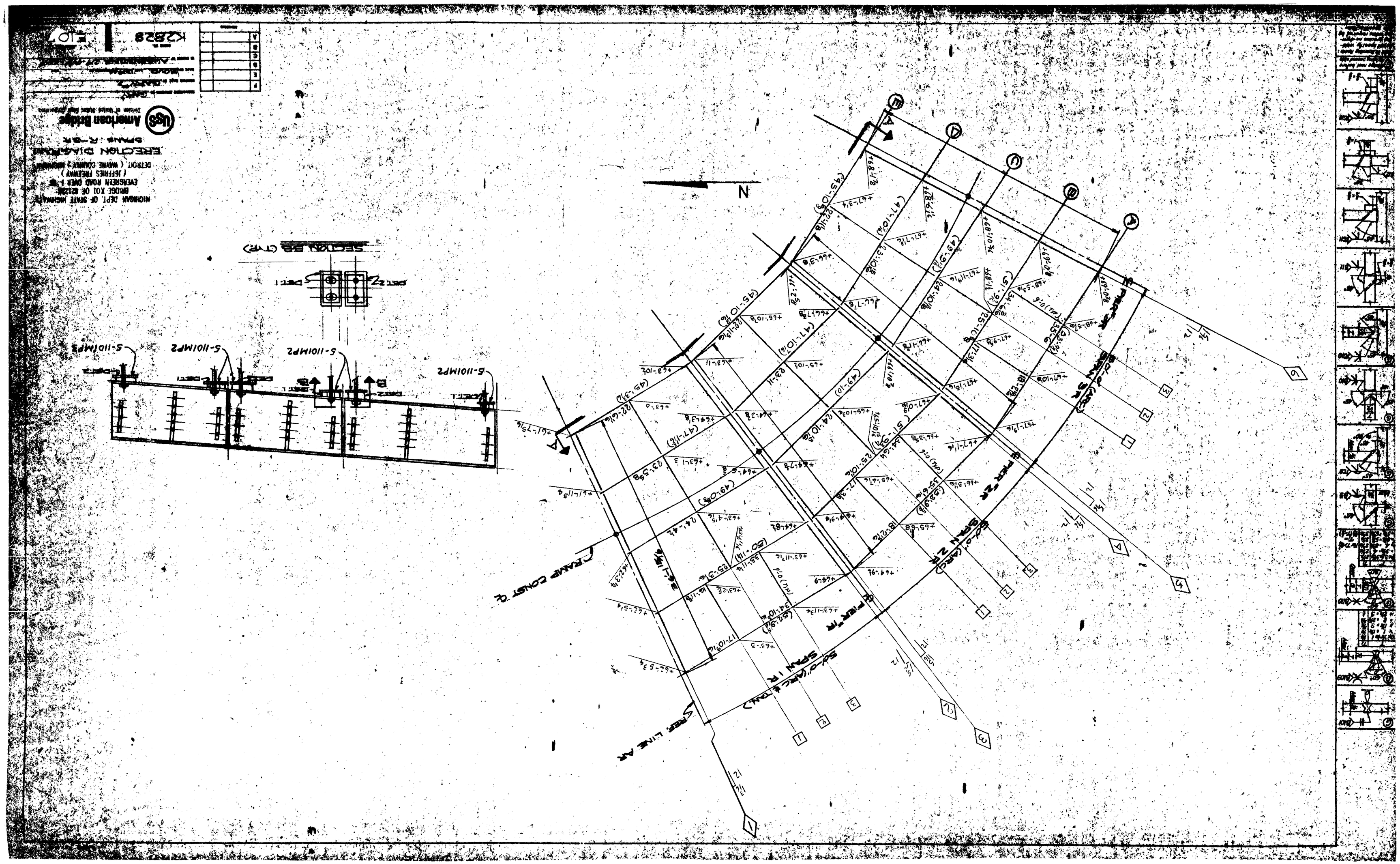
MICHIGAN DEPT. OF STATE HIGHWAYS
BRIDGE X01 OF 82286
EVERGREEN ROAD OVER I-96
(JEFFRIES FREEWAY)
DETROIT (WAYNE COUNTY) MICHIGAN
ERECTION DIAGRAM
SPAN 1-R
American Bridge
Division of United States Steel Corporation
K28828
E107
N
SECTION BB (TYP)
S-110IMP2
S-110IMP3
PIER 1R
PIER 2R
PIER 3R
SPAN 1R
SPAN 2R
SPAN 3R
RAMP CONST ℄
℄ LINE AR

ZENITH A. & B. BERTH CO., PGH. PA. 1-2048 6-66

D-810 REV. 6-65

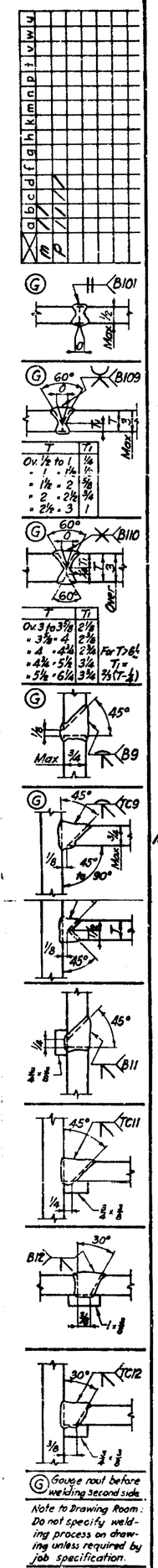

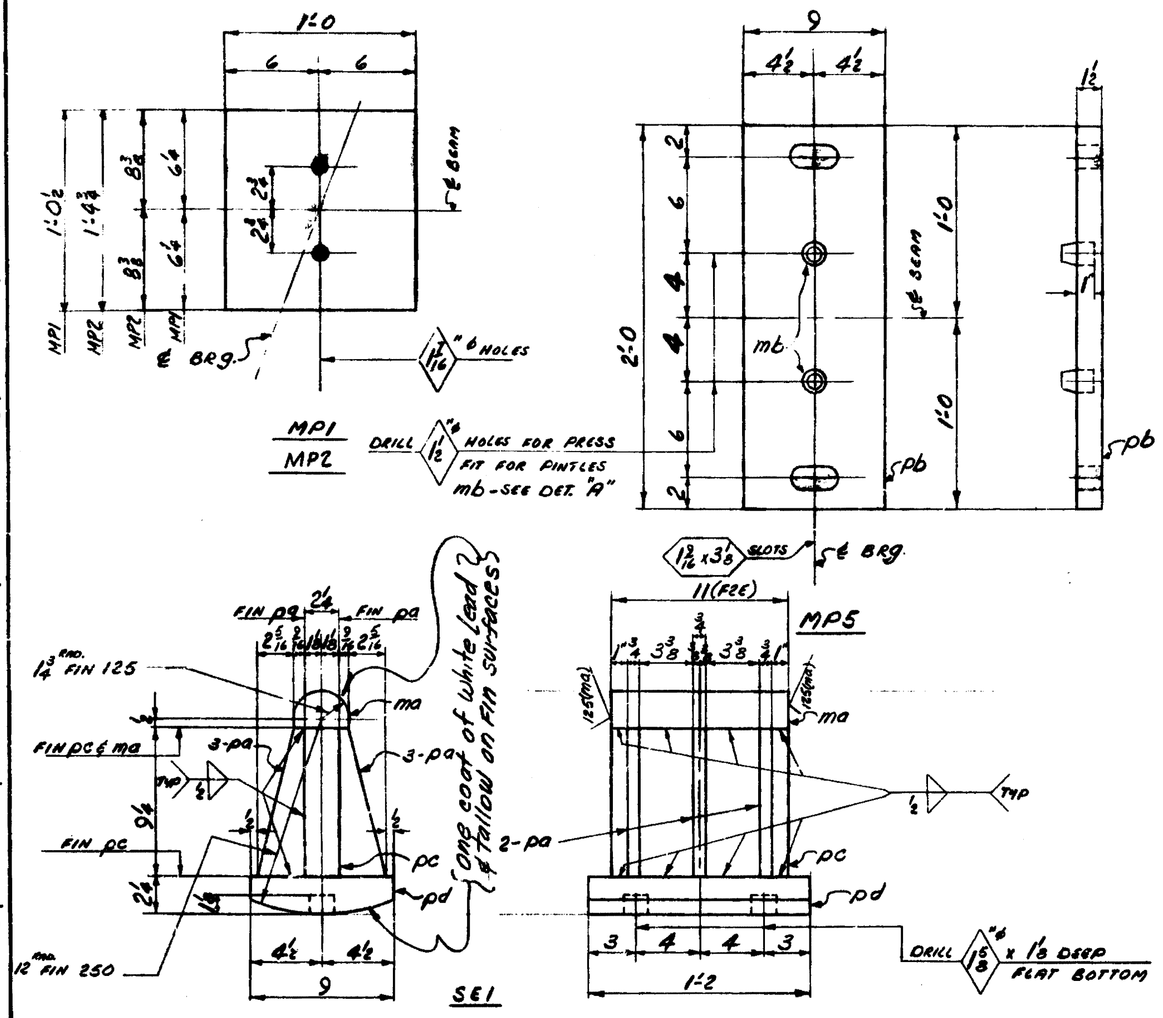

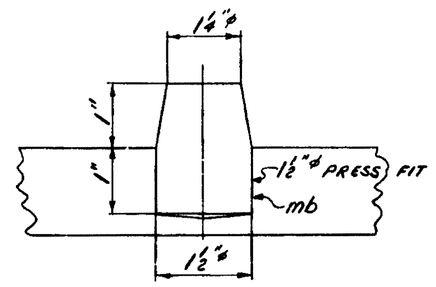

DIV. 1	2	3	4	6	7	8	10	LINE NO.	TOTAL NO. OF PCS. ON SHEET	MATERIAL: NO. OF PCS. ON SKETCH	ASSBY. DESC.	DIMENSIONS	LENGTH PCS	LENGTH INCH	FINISH AND TRIM DESC.	FINISH AND TRIM INCH	SHIPPING OR ASSEMBLING MARK	SHIPPING SPECIFICATIONS OR ASSEMBLING REFERENCE	REMARKS	ORDERED	ITEM	CALCULATED WEIGHT FOR ERECTION SHIP PIECE
								1														
								2														
11								3		11		MASONRY PLATE					101MP1					
								4		11	PL	12 1/2	1	0 1/2					STRAIGHTEN CORE	9 X 80	20 37	101/2
								5	11	11		MASONRY PLATE					101MP2					
								6		11	PL	12 1/2	1	4 3/4					STR. LOOSE		49 1/2	105/28
								7														
11	11	11	9	11	3	6		8		62		MASONRY PLATE					101MP5					
								9		62	PL	9 1/2	2	0			pb	SH. SEE X	STRAIGHTEN CORE	12-0 52	20 37	106/3
								10		124	Rd	1 1/4		2			mb		Edge FIN	12-0	8 3	106/7
								11														
								12														
								13														
								14														
11	11	11	6	5		6		15		49		EXPANSION ROCKER					101SE1					
								16		294	PL	9 1/4 3/4		2 1/8			pa		PL 3/4 x 12 BARS ϕ		IS	107/16
								17		49	PL	9 1/4 2 1/4		11	FE40		pc			7 1/2 x 7 1/2	PROFILE	107/15
								18		49	PL	9 2 1/4	1	2	FE25		pd		STRAIGHTEN		IS	107/14
								19		49	RD	3 1/2		11	FA10		ma		3 1/2 ϕ	19-7	PROFILE	107/17
								20														
								21														
								22														
								23														
								24														
								25														
								26														
								27														
								28														
								29														
								30														
								31														
								32														
								33														
								34														
								35														
								36														
								37														
								38														
								39														
								40														
								41														
								42														
								51														
								52														
								53														
								54														
								55														
								56														
								57														
								58														
								59														
								60														
								61														
								62														
								63														
								64														
								65														
								66														
								67														
								68														
								69														
								70														

K2828

GEN. NOTES:

MAT'L = ASTM A441 MODIFIED CORTEN B
WELDING = AWS E8018 C1
FINISHINGS = AS NOTED

All steel shall be handled carefully and shall be kept free and clean of all foreign materials such as grease, oil, chalk marks, crayon marks, dirt, etc.
All shipping marks shall be made using a steel die.
The founding of corners will not be required.

SPEC'S: MDSH - 1967 EDITION
CURRENT AASHO

PAINT: NONE (EXCEPT FIN. SURFACES ON SE1)
SHOP CONTACT SURFACES: NO

MICHIGAN DEPT. OF STATE HIGHWAYS
BRIDGE NO. OF 82122K
EVERGREEN ROAD OVER I-96
(JEFFRIES FREEWAY)
DETROIT (WAYNE COUNTY) MICHIGAN

EXPANSION ROCKERS & MASONRY PL.

FAT PL.T: 2 | SEQ. CODE: FHE 2 | WD
BSD | NO. CRD. | COST CENTERS: PROD. | NON PROD. | PAY BASIS CODE: FL
WEIGHT REV. NO. 1 | EXCEPTION SHIP DIVISION | LINE CONTROL 12

F		
E		
D		
C		
B		
A	4-14-69	D

REVISIONS

American Bridge
Division of United States Steel Corporation

FABRICATION ASSIGNED TO: GARY
DRAWING MADE BY: GARY #2
MADE BY: VLA DATE: 12/4/68 CHECKED BY: RWB DATE: 12/6/68
IN CHARGE OF: RUGENSTINE - 5659

FOR LOCATION OF SHIPPING PIECES SHOWN ON THIS SHEET REFER TO ERECTION PLANS
E6-E7-E8 & E9

ORDER NO. K2828
SHEET NO. 101

ADV. BILL: 101, 105, 107

ZENITH, A. & G. SMITH CO., PGH., PA. J-1180-964

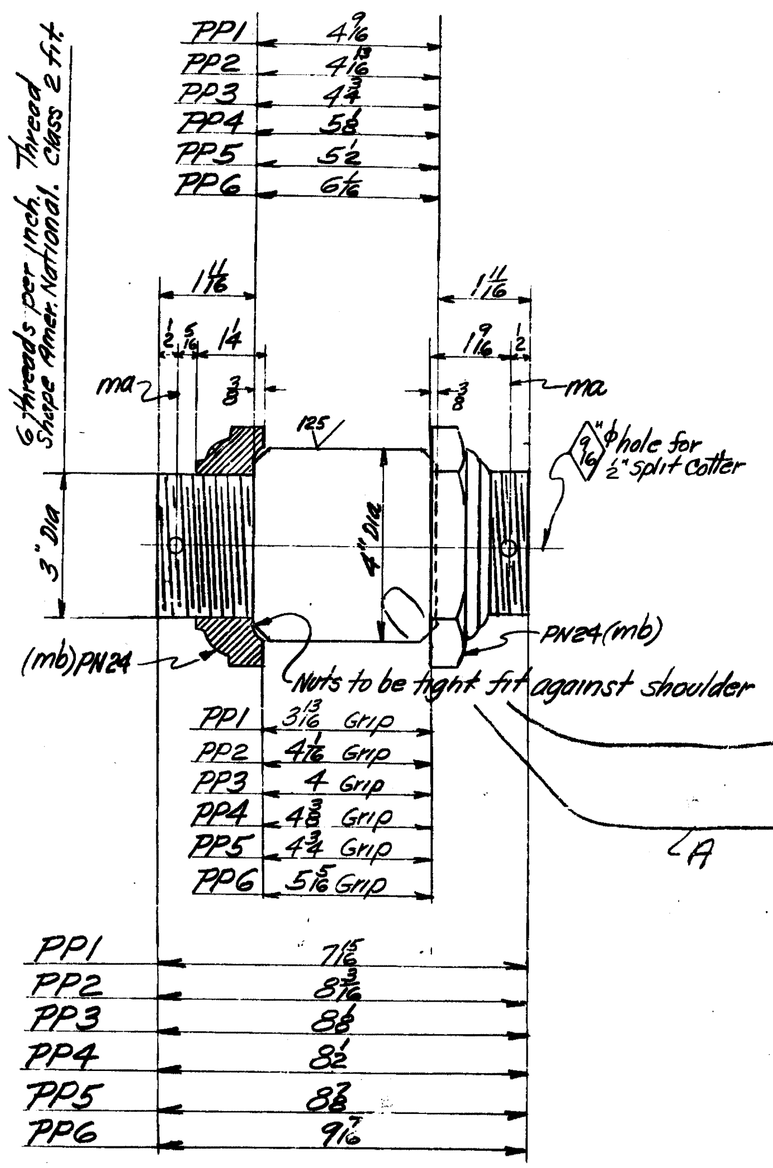

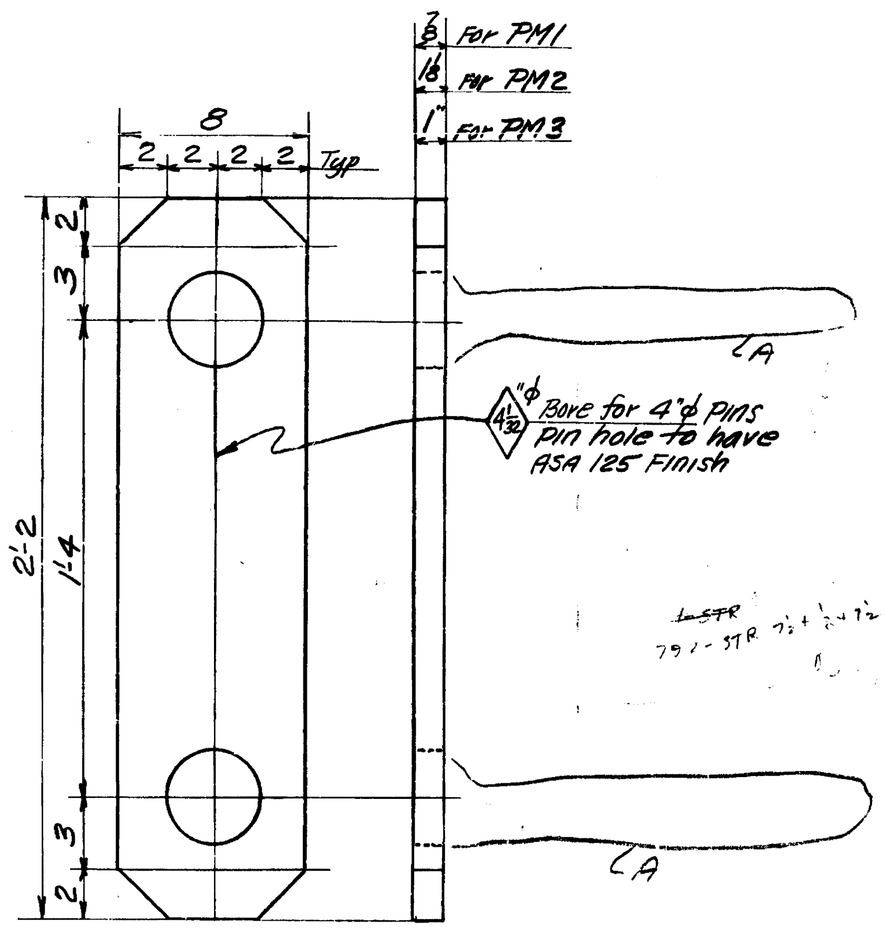

PM1, PM2 & PM3

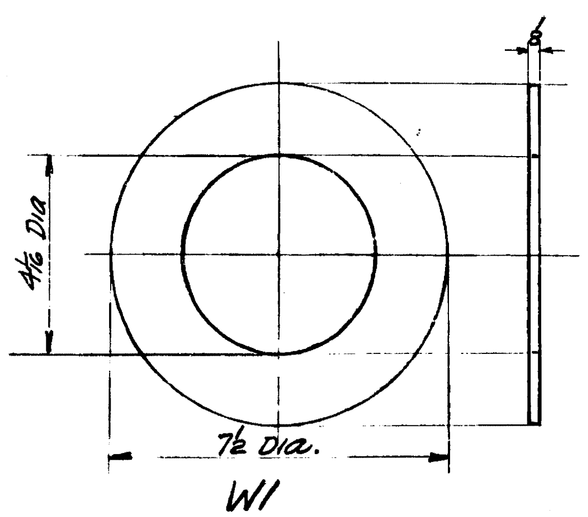

W1

DIV 10	DIV 9	DIV 8	DIV 7	DIV 6	DIV 5	DIV 4	DIV 3	DIV 2	DIV 1	LINE NO.	TOTAL NO. OF PCS. ON ORDER	MATERIAL: NO. OF PCS. ON SKETCH	MATERIAL: ABBRV. DESC.	MATERIAL: DIMENSIONS	MATERIAL: LENGTH FEET	MATERIAL: LENGTH INCH	FINISH AND TRIM: DESC	FINISH AND TRIM: INCH	SHIPPING OR ASSEMBLING MARK	SHIPPING SPECIFICATIONS OR ASSEMBLING REFERENCE	REMARKS	ORDERED	ITEM	CALCULATED WEIGHT FOR ONE SKIP PIECE
										1														
			14	16	2					2		32		BRIDGE PIN					102PP1					
										3		32	RD	4		7 12	FAO				3-07598			M104/3
										4	992	64	M	PIN NUT PN24					mb		3" Dia. Fitz 3-AL-395			M104/6
										5	992	64	M	1/2" ϕ x 5 Split Cotter					ma		3-57522			M104/8
										6														
				10	10	14	44	22	22	7		122		BRIDGE PIN					102PP2					
										8		122	RD	4		8 3/8	FAO				3-07598			M104/3
										9		244	M						mb					
										10		244	M						ma					
										11														
22	22		8	10	2	8				12		72		BRIDGE PIN					102PP3					
										13		72	RD	4		8 8/8	FAO				3-07598			M104/4
										14		144	M						mb					
										15		144	M						ma					
										16														
		22	22	8	8					17		60		BRIDGE PIN					102PP4					
										18		60	RD	4		8 1/2	FAO				3-07598			M104/4
										19		120	M						mb					
										20		120	M						ma					
										21														
	22	22			22	22				22		88		BRIDGE PIN					102PP5					
										23		88	RD	4		8 3/8	FAO				3-07598			M104/1
										24		176	M						mb					
										25		176	M						ma					
										26														
									22	27		22		BRIDGE PIN					102PP6					
										28		22	RD	4		9 1/16	FAO				3-07590			M104/1
										29		44	M						mb					
										30		44	M						ma					
										31														
										32														
										33														
										34														
										35														
										36														
									2	37		2	M	LONG PILOT NUT					102PL16		LOOSE	MICH. SHOP	5	M104/10
										38														
									2	39		2	M	DRIVING NUT					102PD6		LOOSE	3-AL-395		M104/12
										40														B
44	88	88	88	88	88	88	88	88	44	41		792	FLT	7 1/2 .125 Thick					102W1		LOOSE	[illegible]		M1/29
										42														
										43														
										44														
22	22		22	36	14	22	44	44	22	45		248		LINK PLATES					102PM1					
										46		248	FLT	8 7/8		2 2					LOOSE	8X19-6	M104	
										47														
										48														
	22	22			22	22				49		88		LINK PLATES					102PM2					
										50		88	FLT	8 1/8		2 2					LOOSE	8X4	M104	
										51														
										52														
		22	22	8	8					53		60		LINK PLATES					102PM3					
										54		60	FLT	8 1		2 2					LOOSE	8X6	M104	
										55														
										56														
										57														
										58														
										59														
										60														
										61														
										62									K2828					

SPECIFICATIONS: Mich. State Hwy 1967 and current AASHO
MATERIAL: ASTM-A441 Mod. (Cor. Ten "B")
RIVETS: None
OPEN HOLES: As noted
WELDING: None

All steel shall be handled carefully and shall be kept free and clean of all foreign materials such as grease, oil, chalk marks, crayon marks, dirt, etc.
All shipping marks shall be made using a steel die.
The rounding of corners will not be required.

PAINT: None (A)
SHOP CONTACT SURFACES: No

MICHIGAN DEPT. OF STATE HIGHWAYS
BRIDGE X01 OF 82122K
EVERGREEN ROAD OVER I-96
(JEFFRIES FREEWAY)
DETROIT, (WAYNE COUNTY) MICHIGAN

BRIDGE PINS, WASHERS & LINK PLATES

American Bridge Division of USS United States Steel

FAB. PLT. 03 | STD. CODE 54569 | COST CENTERS: PROD. 56 | NON PROD. | PAY BASIS CODE | NO. CHG. ORD. | WEIGHT REV. NO. | EXCEPTION SHIP DIVISION | LINE CONTROL 33

REVISIONS: D 6/23/69 D; C 5/26/69 D; B 4-14-69 D; A 3/21/69 EK

FABRICATION ASSIGNED TO: Gary
DRAWING MADE BY: RWB DATE 7/18/68 CHECKED BY: P.Z. DATE 1-9-69
IN CHARGE OF: Augenstine 5555

FOR LOCATION OF SHIPPING PIECES SHOWN ON THIS SHEET REFER TO ERECTION PLANS: E6, E7, E8, E9 & E10

ORDER NO. K2828 | SHEET NO. 102

ADV. BILL

ZENITH, A. & B. SMITH CO., PGH., PA. J-1183-564

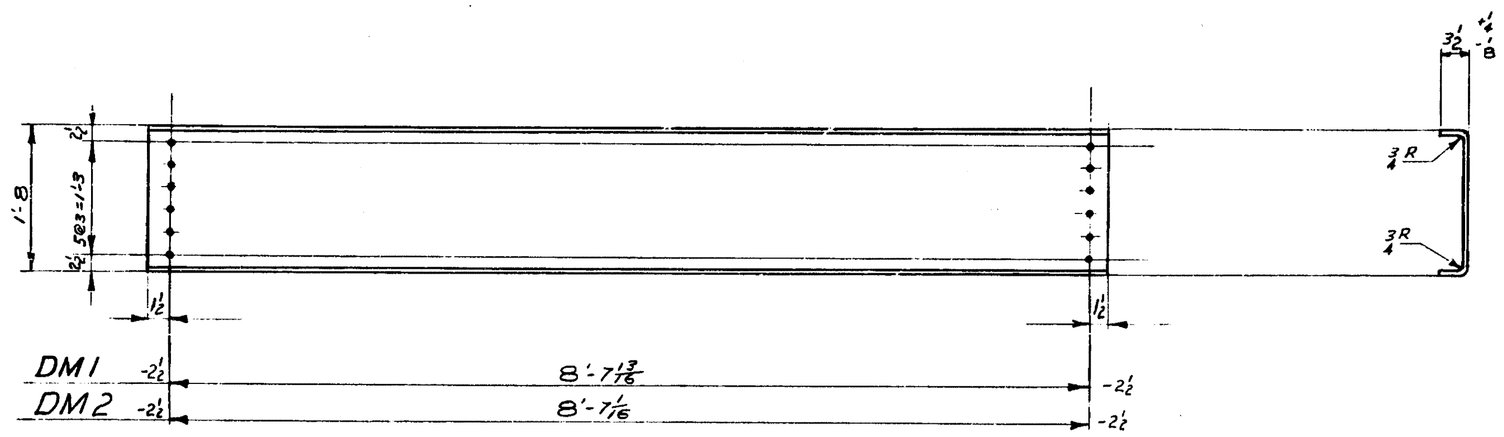

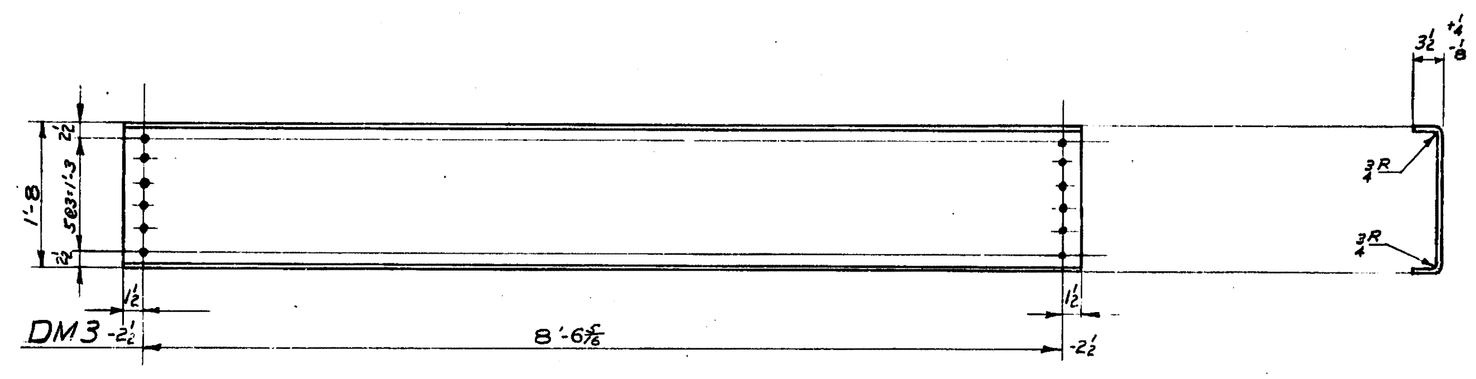

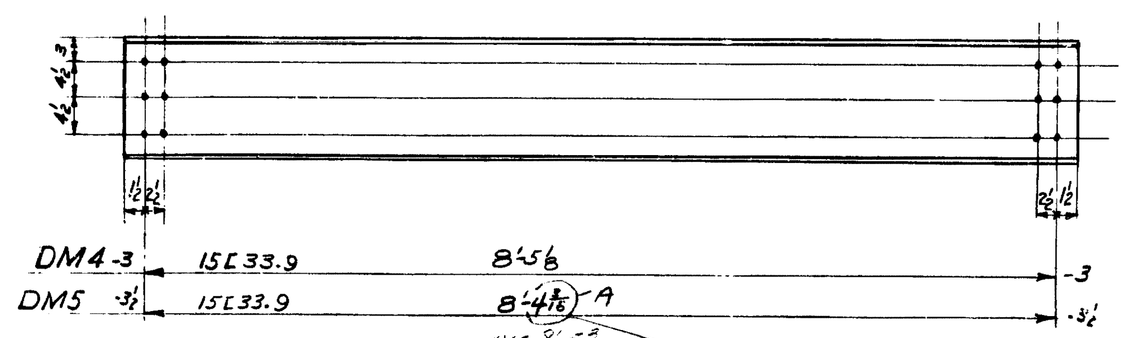

WAS 8'-5 3/16

PER TELEPHONE CONVERSATION ANDY JONES TO JERRY HILL 9/29/69
(ok to 12ug Holes & REDRILL.)

WAS 8'-8 3/16

All steel shall be handled carefully and shall be kept free and clean of all foreign materials such as grease, oil, chalk marks, crayon marks, dirt, etc.
All shipping marks shall be made using a steel die.
The rounding of corners will not be required.

D-BIC

DIV 21	LINE NO.	TOTAL NO. OF PCS. OR ASSEMBLIES	MATERIAL: NO. OF PCS. OR SKETCH	ASSBY. DESC.	DIMENSIONS	LENGTH FEET	LENGTH INCH	FINISH AND TRIM DESC.	FINISH AND TRIM INCH	SHIPPING OR ASSEMBLING MARK	SHIPPING SPECIFICATIONS OR ASSEMBLING REFERENCE	REMARKS	ORDERED	ITEM	
	1														
	2														
	3	10	10		DIAPHRAGM					103DM1					
	4		10	PL	106 5/8 x 3/8	2	3	BEND				LOOSE	106 5/8 X 22 7/16	1003	110/17
	5														
	6														
10	7		10		DIAPHRAGM					103DM2					
	8		10	PL	106 5/8 x 3/8	2	3	BEND				LOOSE	106 X 22 7/16	1003	110/18
	9														
	10														
10	11		10		DIAPHRAGM					103DM3					
	12		10	PL	105 5/16 x 3/8	2	3	BEND				LOOSE	105 5/16 X 22 7/16	1004	110/19
	13														
	14														
10	15		10		DIAPHRAGM					103DM4					
	16		10	CH	15 33.9	8	8 1/16					LOOSE	M 43-6	1005D	2011/10
	17														
	18														
10	19		10		DIAPHRAGM					103DM5					
	20		10	CH	15 33.9	8	7 3/16 A					LOOSE	M 43-6	1006D	110/20
	21														
	22														
	23														
	24														
	25														
	26														
	27														
	28														
	29														
	30														
	31														
	32														
	33														
	34														
	35														
	36														
	37														
	38														
	39														
	40														
	41														
	42														
	43														
	44														
	45														
	46														
	47														
	48														
	49														
	50														
	51														
	52														
	53														
	54														
	55														
	56														
	57														
	58														
	59														
	60														
	61														
	62														

K2828

MATERIAL: ASTM-A441 MOD. (COR TEN "B")
BOLTS: NONE
OPEN HOLES: 1/16
WELDING: NONE

PAINT: NO
SHOP CONTACT SURFACES: NO

MICHIGAN DEPT. OF STATE HIGHWAYS
BRIDGE NO. OF 82122K
EVERGREEN [illegible] OVER I-96
(JEFFRIES FREEWAY)
DETROIT, (WAYNE COUNTY) MICHIGAN

DIAPHRAGMS

American Bridge Division of USS United States Steel

FAB. PLT. 03 | MO. CODE 54570 | COST CENTERS: PROD. | NON PROD. | PAY BASIS CODE | 56 | WEIGHT | REV. NO. | EXCEPTION | SHIP DIVISION | LIST CONTROL 10

REVISIONS: A 9/29/69 ⑤ DDZ

FABRICATION ASSIGNED TO GARY
DRAWING MADE BY GARY #2
MADE BY E.B. DATE 12-26-68 CHECKED BY D.Z. DATE 1-24-69
IN CHARGE OF AUGENSTINE 213-944-5559

FOR LOCATION OF SHIPPING PIECES SHOWN ON THIS SHEET REFER TO ERECTION PLANS: E6

ORDER NO. K2828 | SHEET NO. 103

ZENITH, A. & B. SMITH CO., PGH., PA. A-1183-066

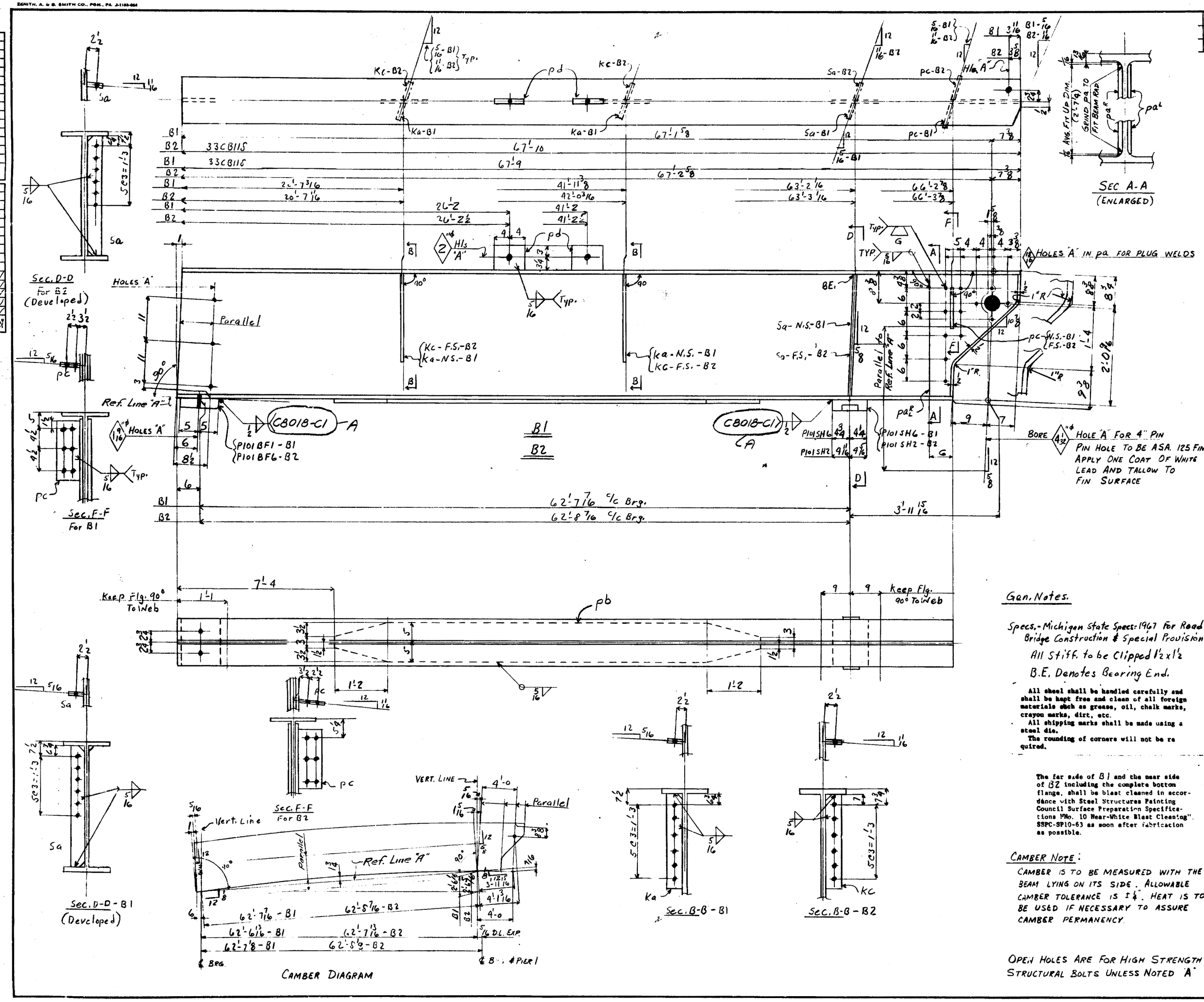

Line No.	Total No. Pcs. on Order	No. of Pcs. on Order	Assembly Desc.	Material Dimensions	Length Feet	Length Inch	Finish Desc.	Finish Inch	Shipping or Assembling Mark	Shipping Specification or Assembly Reference	Remarks	Ordered	Item	Calculation Number for the Mark
1														
2														
3		1		BEAM					104B1	68'				
4		1	CB	33 118	67	10						L71-11L4	100L	110-2
5		1	M	Sole Plate					P101 BF1		Det. on	—		
6		1	M	Top Shoe					P101 SH6		Sh. P101	—		
7	pa^R	2	PL	23 8	2	7 9			pa^R		20'-3 32-7 9 Gate 2		IS	110-8
8	2	1	PL	10 1	48	4			pb		Cc, U, R	B138 K 48-4	1001	110-3
9		2	FLT	3 2 1 2	1	11 1/4	TIE		kc			33 K 12-4	PP005	110-4
10														
11	2	1	FLT	3 2 1 2	2	7 5/16	5/16 TIE		sa			33 K 30-5	PP005	110-6
12														
13	2	1	FLT	6 2 1 2	1	0			pc			63 K 32-0	PP010	110-7
14	4	2	FLT	6 4 1 2		8			pd		A36		SS	
15														
16														
17														
18														
19														
20														
21														
22		1		BEAM					104B2	68'				
23		1	CB	33 118	67	11						L71-11L4	100L	110-2
24		1	M	Sole Plate					P101 BF6		Det. on	—		
25		1	M	Top Shoe					P101 SH2		Sh. P101	—		
26		2	PL						pa^R					110-8
27		1	PL						pb					110-3
28		2	FLT	3 2 1 2	1	11 1/2			kc				PP005	110-4
29														
30		2	FLT						pd					
31		1	FLT						sa					110-6
32		1	FLT						pc					110-7
33														
34														
35														
36														
37														
38														
39														
40														
41														
42														
43														
44														
45														
46														
47														
48														
49														
50														
51														
52														
53														
54														
55														
56														
57														
58														
59														
60														
61														
62														

K2828

Gen. Notes.

Specs.- Michigan State Specs: 1967 For Road & Bridge Construction & Special Provisions.

All Stiff. to be Clipped 1/2 x 1/2

B.E. Denotes Bearing End.

All steel shall be handled carefully and shall be kept free and clean of all foreign materials such as grease, oil, chalk marks, crayon marks, dirt, etc.

All shipping marks shall be made using a steel dia.

The rounding of corners will not be required.

The far side of B1 and the near side of B2 including the complete bottom flange, shall be blast cleaned in accordance with Steel Structures Painting Council Surface Preparation Specifications No. 10 Near-White Blast Cleaning". SSPC-SP10-63 as soon after fabrication as possible.

Camber Note:

Camber is to be measured with the beam lying on its side. Allowable camber tolerance is ±1/4. Heat is to be used if necessary to assure camber permanency.

Open Holes Are For High Strength Structural Bolts Unless Noted 'A'

MATERIAL: ASTM A441 Modified (Cor-Ten B) U.N.
RIVETS: None
OPEN HOLES: 13/16" U.N.
WELDING: Yes. AWS & Special Provisions "Use E70XX Low Hydrogen Electrodes or E71-XXXX or E70-XXXX Flux and Electrode 12 U.N. Combinations."
PAINT: No.
SHOP CONTACT SURFACES: No

MICHIGAN DEPT. OF STATE HIGHWAYS
BRIDGE X01 OF 82122K
EVERGREEN ROAD OVER I-96
(JEFFRIES FREEWAY)
DETROIT, (WAYNE COUNTY) MICHIGAN

Beam A & L Span #1

Far Pt.	No.	Cost Centers		Seq. Code	Pay Basis Code
03				54571	
Bridg.	Chg.	Prod.	Non Prod.		56

Weight Rev. No. | Exception Shop Division | Line Control 2C

Revisions	
A 6/6/62	3
B	
C	
D	
E	
F	

American Bridge Division of United States Steel

Fabrication Assigned To: GARY
Drawing Made By: GARY #2
Made By: WP Date: 1-9-62 Checked By: ALH Date: 1/22/62
In Charge Of: AUGENSTINE #5559

For location of shipping pieces shown on this sheet refer to erection plans.
E6

Order No. K2828
Sheet No. 104

ADV. BILL

ZENITH, A. & B. SMITH CO., PGH., PA. J-1162-064

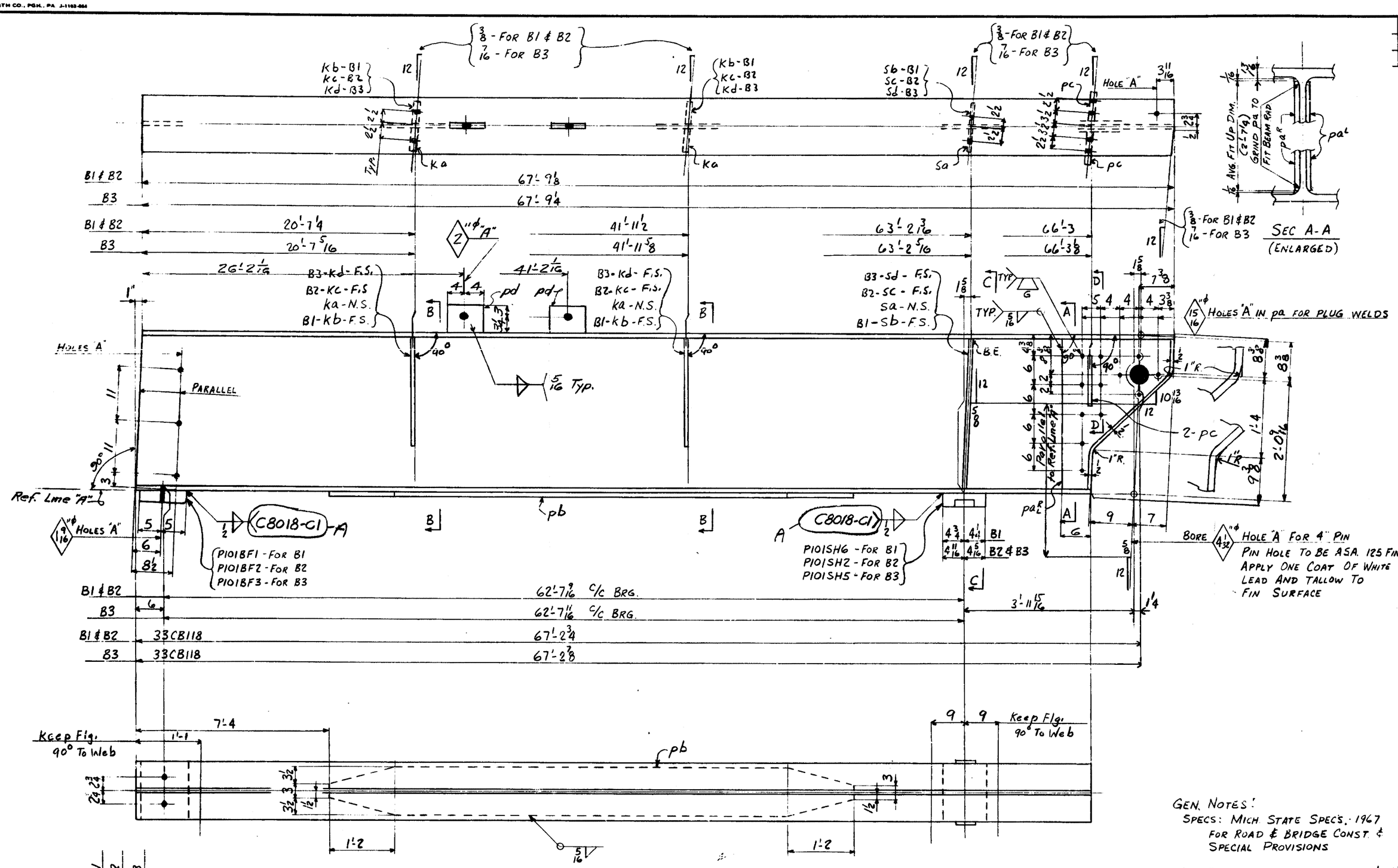

LINE NO.	TOTAL NO. OF PCS. ON ORDER	NO. OF PCS. ON SKETCH	ASSEM. MARK	MATERIAL DIMENSIONS	LENGTH FEET	LENGTH INCH	FINISH AND TRIM DESC.	FINISH AND TRIM INCH	SHIPPING OR ASSEMBLING MARK	SHIPPING SPECIFICATIONS OR ASSEMBLING REFERENCE	REMARKS	ORDERED		CALCULATED WEIGHT FOR THE SHIP PIECE
													ITEM	
1														
2		1		BEAM					10581	68'				
3		1		BEAM					10582	68'				
4		1		BEAM					10583	68'				
5		2	CB	33 118	67	10 1/2				B1 & B2		67-11 1/4	1006	110 3/4
6		1	CB	33 118	67	10 1/2				B2		67-11 1/4	1006	110 3/4
7		6	PL	23 1/2 x 5/8	2	7 1/4			pa'		2 3/4 x 2'-7 1/4 cuts 2		IS	110 3/8
8		3	PL	10 1	48	4			pb			36x 36x	005	110 3/3
9		6	FLT	6 1/2 1/2	1	0			pc			36x 36x	99010	110 3/7
10		6	FLT	3 1/2 1/2	1	1 1/4	TIE		ka			36x 36x	99005	110 3/4
11		2	FLT	3 1/2 1/2	1	11 3/8	TIE		kb	B1		36x 36x	99006	110 3/5
12		3	FLT	3 1/2 1/2	2	7 3/16	FIT & TIE		sa			36x 30-6	99008	110 3/6
13		1	FLT	3 1/2 1/2	2	7 3/16	FIT & TIE		sb	B1			99008	110 3/6
14		2	FLT	3 1/2 1/2	2	1 5/8	TIE		kc	B2			99006	110 3/5
15		2	FLT	3 1/2 1/2	2	1 1/4	TIE		kd	B3			99006	110 3/5
16		1	FLT	3 1/2 1/2	2	7 3/16	FIT & TIE		sc	B2			99008	110 3/6
17		1	FLT	3 1/2 1/2	2	7 3/16	FIT & TIE		sd	B3			99008	110 3/6
18		1	M	Sq 1/2 Plate					P101BF1	B1		—		
19		1	M	" "					P101BF2	B2		—		
20		1	M	" "					P101BF3	B3	Dat. on Sh. P101	—		
21		1	M	Top Shoe					P101SH6	B1		—		
22		1	M	" "					P101SH2	B2		—		
23		1	M	" "					P101SH5	B3		—		
24														
25		6	FLT	6 1/4 1/2		8			pd		1836		5/8	
26														
27														
28														
29														
30														
31														
32														
33														
34														
35														
36														
37														
38														
39														
40														
41														
42														
43														
44														
45														
46														
47														
48														
49														
50														
51														
52														
53														
54														
55														
56														
57														
58														
59														
60														
61														
62														
63														

(K2828)

GEN. NOTES:
SPECS: MICH STATE SPECS., 1967 FOR ROAD & BRIDGE CONST. & SPECIAL PROVISIONS

ALL STIFFENERS TO BE CLIPPED 1 1/2 x 1 1/2

B.E DENOTES BEARING END

All steel shall be handled carefully and shall be kept free and clean of all foreign materials such as grease, oil, chalk marks, crayon marks, dirt, etc.
All shipping marks shall be made using a steel die.
The rounding of corners will not be required.

CAMBER NOTE:
CAMBER IS TO BE MEASURED WITH THE BEAM LYING ON ITS SIDE. ALLOWABLE CAMBER TOLERANCE IS ±1/4". HEAT IS TO BE USED IF NECESSARY TO ASSURE CAMBER PERMANENCY.

OPEN HOLES ARE FOR HIGH STRENGTH STRUCTURAL BOLTS UNLESS NOTED "A"

MATERIAL: ASTM A441 MODIFIED COR-TEN B UN.
RIVETS: NONE
OPEN HOLES: 13/16" UN.
WELDING: YES ALL'S & SPECIAL PROVISIONS "USE E70XX LOW HYDROGEN ELECTRODES OR E7X-XXXX OR E72-XXXX FLUX AND ELECTRODE COMBINATIONS." (UNO) - A
PAINT: NO.
SHOP CONTACT SURFACES: NO

MICHIGAN DEPT. OF STATE HIGHWAYS
BRIDGE X01 OF 82122K
EVERGREEN ROAD OVER I-96
(JEFFRIES FREEWAY)
DETROIT, (WAYNE COUNTY) MICHIGAN

BEAMS - SPAN 1
LINES B, C, & D

FAB. PLT. C3 | SEQ. CODE 54572 | COST CENTERS: PROD. | NON PROD. | PAY BASIS CODE 56 | WEIGHT EXCEPTION REV. NO. | SHIP DIVISION | LINE CONTROL 13

REVISIONS: A 6/22/67

American Bridge Division of United States Steel

FABRICATION ASSIGNED TO: GARY
DRAWING MADE BY: GARY #2
MADE BY: WAB DATE: CHECKED BY: ALH DATE: 1/27/67
IN CHARGE OF: AUGENSTINE 5559

FOR LOCATION OF SHIPPING PIECES SHOWN ON THIS SHEET REFER TO ERECTION PLANS: E6

ORDER NO. K2828 | SHEET NO. 105

ADV. BILL

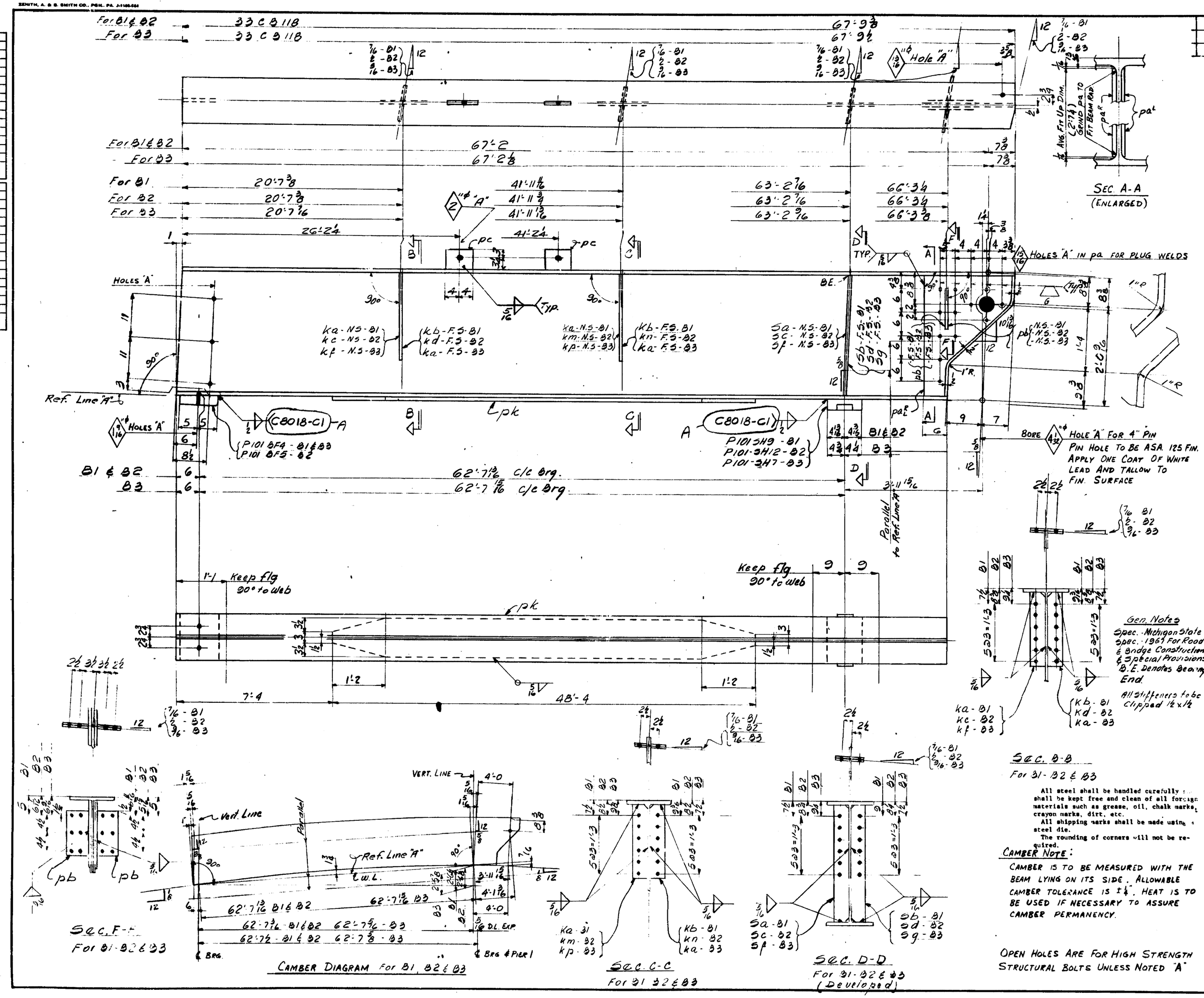

Line No.	Total No. of Pcs. on Order	No. of Pcs. on Order	Assembly Desc.	Material Dimensions	Length Feet	Length Inch	Finish Desc.	Finish Inch	Shipping or Assembling Mark	Shipping Specifications or Assembling Reference	Remarks	Ordered	Item	Calculated Weight for one Ship Piece
1														
2		1		BEAM					106B1	68'				
3		1	CB	33 118	67	10 1/2						67-11 1/4	1006	110-02
4		1	M	SOLE PLATE					P101 B-4		(Def. on	—		
5		1	M	TOP SHOE					P101SH9		SH. P101	—		
6	4	2	FLT	3 1/2 1/2		1 11/4	TIE		ka			32 X 18-4	9000	110-05
7		2	FLT	3 1/2 1/2		2 1	TIE		kb				9000	110-05
8	6	2	FLT	6 1/4 1/2		8			pc		A36		4.5	
9														
10		1	FLT	3 1/2 1/2	2	7 1/16	FIE TIE		sa			35 X 30-5	9000	110-06
11		1	FLT	3 1/2 1/2	2	7 1/16	FIE TIE		sb				9000	110-06
12	6	2	FLT	6 1/2 1/2	1	0			pb			42 X 20-5	9000	
13														
14	3	1	PL	10 1	48	4			pk			32 A 48-4	1005	110-03
15	3/32	2	PL	12 3/8 5/8	2	7/16			pa[k]		3/8 x 2-7/8 Gus.-2		15	110-08
16														
17														
18														
19		1		BEAM					106B2					
20		1	CB	33 118	67	10 1/2				68'		67-11 1/4	1006	110-02
21		1	M	SOLE PLATE					P101 BF5		(Def. on	—		
22		1	M	TOP SHOE					P101SH12		SH. P101	—		
23		1	FLT	3 1/2 1/2		2 0 1/2	TIE		kc				9000	110-05
24		1	FLT	3 1/2 1/2		2 0 3/8	TIE		kd				9000	110-05
25		1	FLT	3 1/2 1/2		2 0 1/4	TIE		km				9000	110-05
26		1	FLT	3 1/2 1/2		2 0 1/4	TIE		kn				9000	110-05
27		1	FLT	3 1/2 1/2		2 7 1/16	FIE TIE		sc				9000	110-06
28		1	FLT	3 1/2 1/2		2 7 1/16	FIE TIE		sd				9000	110-06
29		2	FLT						pb					110-07
30		2	PL						pa[k]					110-08
31		1	PL						pk					110-03
32		2	FLT						pc					
33														
34														
35														
36		1		BEAM					106B3					
37		1	CB	33 118	67	10 1/2				68'		67-11 1/4	1006	110-02
38		1	M	SOLE PLATE					P101 BF4		Def. on SH. P101	—		
39		1	M	TOP SHOE					P101SH7			—		
40		1	FLT	3 1/2 1/2		2 1	TIE		kf				9000	110-05
41		2	FLT						ka					110-05
42		1	FLT	3 1/2 1/2		2 0 3/8	TIE		ke				9000	110-05
43		2	PL						pa[f]					110-08
44		1	FLT	3 1/2 1/2	2	7 7/16	FIE TIE		sf				9000	110-06
45		1	FLT	3 1/2 1/2	2	7 1/16	FIE TIE		sa				9000	110-06
46		2	FLT						pb					110-07
47		1	PL						pk					110-03
48		2	FLT						pc					110-03
49														
50														
51														
52														
53														
54														
55														
56														
57														
58														
59														
60														
61														
62														
63									K2828					

MATERIAL: ASTM A441 Modified (Cor-Ten B U.N.)
RIVETS: None
OPEN HOLES: 13/16" U.N.
WELDING: Yes. AWS & Spec. Provisions Use E70XX Low Hydrogen Electrode or E71-XXXXX or E7016-XXXXX Flux and Electrode (U.N.) Combinations
PAINT: No
SHOP CONTACT SURFACES: No

MICHIGAN DEPT. OF STATE HIGHWAYS
BRIDGE X01 OF 82122K
EVERGREEN ROAD OVER I-96
(JEFFRIES FREEWAY)
DETROIT, (WAYNE COUNTY) MICHIGAN

Beam E, Beam F & Beam G Span "1"

Fab. Plt.	2	Seq. Code	54543
Cost Centers: Prod. / Non Prod. / Pay Basis Code			
Weight / Exception Rev. No. / Shop Division		Line Control	56 / 30

Revisions	
F	
E	
D	
C	
B	
A	2/27/69 D

American Bridge Division of United States Steel

Fabrication assigned to: GARY
Drawing made by: GARY #2
Made by: T.S. Date: — Checked by: ALH Date: 1/29/69
In charge of: AUGENSTINE 5559

For location of shipping pieces shown on this sheet refer to erector plans: E6

Order No.: K2828
Sheet No.: 106

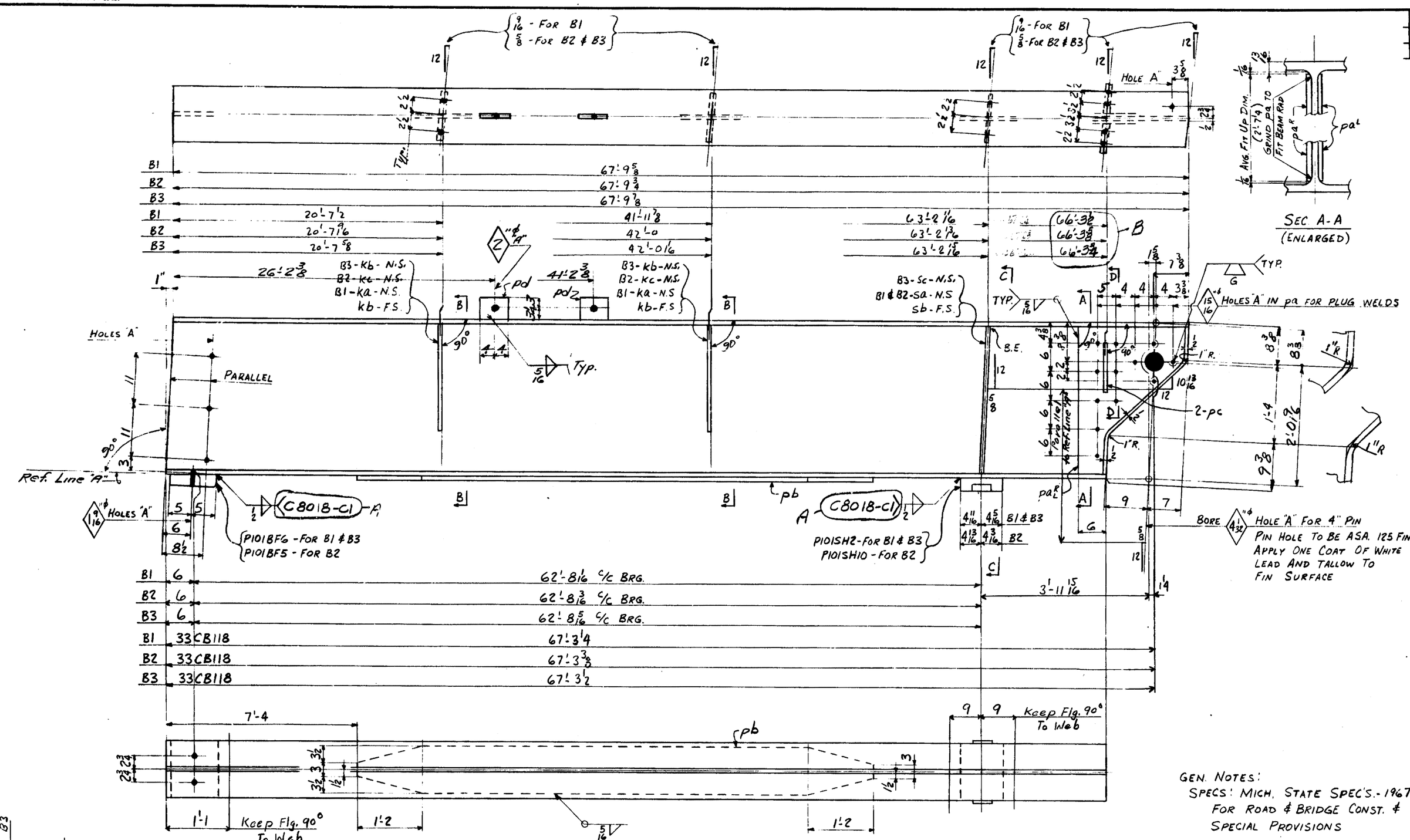

GEN. NOTES:
SPECS: MICH. STATE SPEC'S.-1967 FOR ROAD & BRIDGE CONST. & SPECIAL PROVISIONS

ALL STIFFENERS TO BE CLIPPED 1½x1½

B.E. DENOTES BEARING END

All steel shall be handled carefully and shall be kept free and clean of all foreign materials such as grease, oil, chalk marks, crayon marks, dirt, etc.
All shipping marks shall be made using a steel die.
The rounding of corners will not be required.

CAMBER NOTE:
CAMBER 5 TO BE MEASURED WITH THE BEAM LYING ON ITS SIDE. ALLOWABLE CAMBER TOLERANCE IS ±¼". HEAT IS TO BE USED IF NECESSARY TO ASSURE CAMBER PERMANENCY

OPEN HOLES ARE FOR HIGH STRENGTH STRUCTURAL BOLTS UNLESS NOTED "A"

LINE NO.	TOTAL NO. OF PCS. ON ORDER	NO. OF PCS. ON SHIPMENT	ASSBY. MARK	MATERIAL DIMENSIONS	LENGTH FEET	LENGTH INCH	FINISH AND TRIM DESC.	FINISH AND TRIM INCH	SHIPPING OR ASSEMBLING NAME	SHIPPING SPECIFICATIONS OR ASSEMBLING REFERENCE	REMARKS	ORDERED		CALCULATED WEIGHT FOR ONE SHIP PIECE
1														
2		1		BEAM					107B1	68'				
3		1		BEAM					107B2	68'				
4		1		BEAM					107B3	68'				
5		1	CB	33 118	67	10 3/8				B1		67-114	1006	110 1/2
6		1	CB	33 118	67	10 3/8				B2		67-114	1006	110 1/2
7		1	CB	33 118	67	10 3/8				B3		67-114	1006	110 1/2
8		6	PL	23 3/8	2	7 1/4			pa^R		29 5/8 x 2-7/4 Ex 4 3		TS	110 1/8
9		3	PL	10 1	48	4			pb		11 31 / 4 x 48-4 / 2-1/4	1001 / 1006		110 1/2
10		6	FLT	6 1/2 1/2	1	0			pc		5 3/4 x 30-0	1001		110 1/2
11		2	FLT	3 1/2 1/2	2	1 1/2	TIE		ka	B1	3 3/4 x 30-4	1006		110 1/4
12		8	FLT	3 1/2 1/2	1	11 1/4	TIE		kb	2-B1,B2 4-B3	3 3/4 x 13-4	1006		110 1/2
13		2	FLT	3 1/2 1/2	2	7 1/16	FIT & TIE		sa	B1, B2		1006		110 1/4
14		3	FLT	3 1/2 1/2	2	7 1/16	FIT & TIE		sb		3 3/4 x 30-5	1006		110 1/4
15		2	M	Sole Plate					P101BF6	B1, B3				
16		1	M	" "					P101BF5	B2	Det. on Sht. P101			
17		2	M	Top Shoe					P101SH2	B1, B3				
18		1	M	" "					P101SH10	B2				
19		2	FLT	3 1/2 1/2	2	1 3/8	TIE		kc	B2			1002	
20		1	FLT	3 1/2 1/2	2	7 1/16	FIT & TIE		sc	B3			1002	
21														
22		6	FLT	6 1/2 1/2		8			pd		A36		55	
23														
24														
25														
26														
27														
28														
29														
30														
31														
32														
33														
34														
35														
36														
37														
38														
39														
40														
41														
42														
43														
44														
45														
46														
47														
48														
49														
50														
51														
52														
53														
54														
55														
56														
57														
58														
59														
60														
61														
62														

K2828

MATERIAL: ASTM A441 MODIFIED COR-TEN B U.N.
RIVETS: NONE
OPEN HOLES: 13/16" U.N.
WELDING: YES, AWS & SPECIAL PROVISIONS "USE E70XX LOW HYDROGEN ELECTRODES OR F7XXXXX OR F7XXXXX FLUX AND ELECTRODE COMBINATIONS" (U.N.)
PAINT: NO
SHOP CONTACT SURFACES: NO

MICHIGAN DEPT. OF STATE HIGHWAYS
BRIDGE X01 OF 82122K
EVERGREEN ROAD OVER I-96
(JEFFRIES FREEWAY)
DETROIT (WAYNE COUNTY) MICHIGAN
BEAMS - SPAN 1
LINES H, J, & K

American Bridge Division of United States Usa United States Steel

FAB. PLT. C3 | SEQ. CODE 54574 | COST CENTERS | PROD. | NON PROD. | PAY BASIS CODE | 56 | WEIGHT REV. NO. | EXCEPTION SHIP DIVISION | LINE CONTROL 2C

REVISIONS
B 5/16/69 D
A 2/27/69 D

FABRICATION ASSIGNED TO GARY
DRAWING MADE BY GARY #2
MADE BY WAB DATE CHECKED BY ALH DATE 1/24/68
IN CHARGE OF AUGENSTINE 5559

FOR LOCATION OF SHIPPING PIECES SHOWN ON THIS SHEET REFER TO ERECTION PLANS: E6

ORDER NO. K2828 | SHEET NO. 107

ADV. BILL

ZENITH A & B SMITH CO. PGH., PA. 18 0052 6-67

D-61KC REV. 3-67

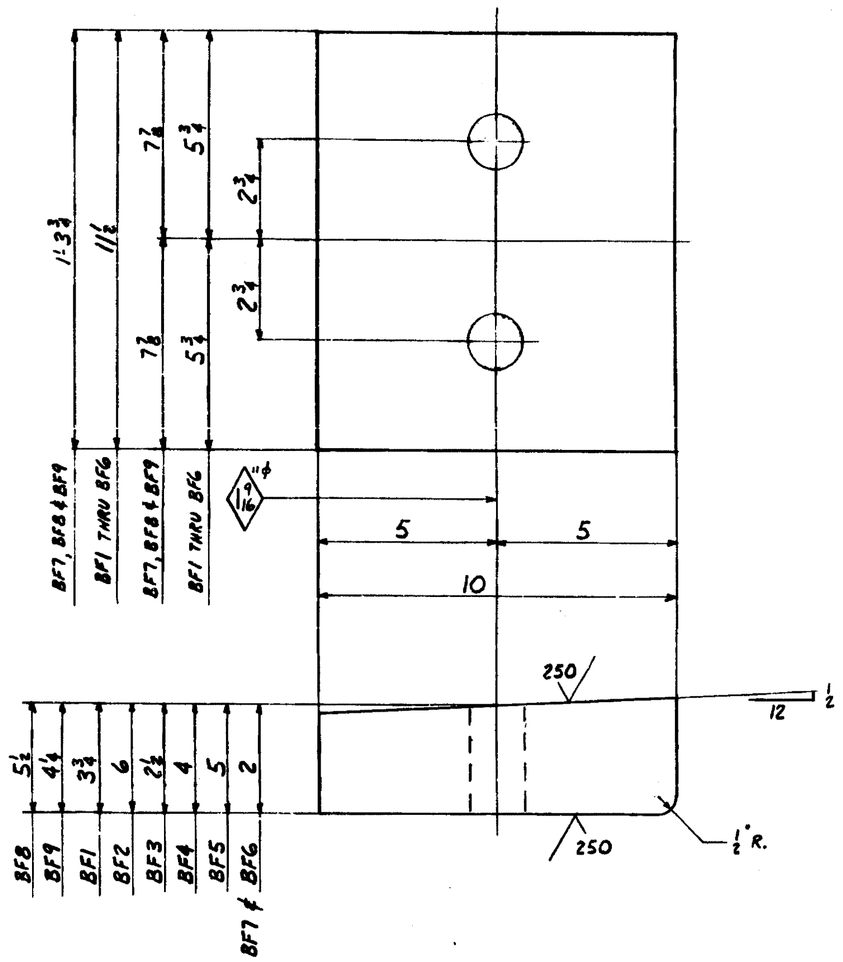

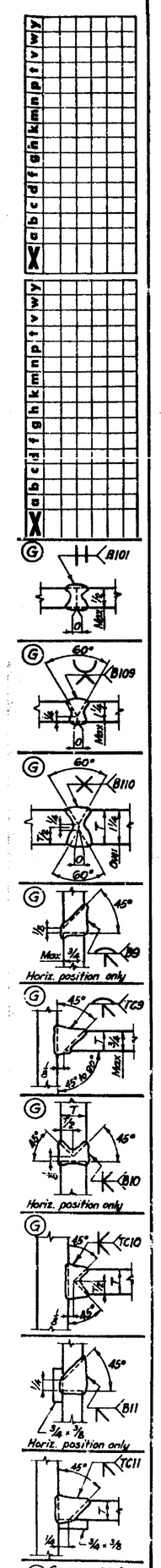

Note to Drawing Room: Do not specify welding process on drawing unless required by job specification. For more detailed information on AISC Standard Practice Groove Welds, see Beam Card 16.

| SHOP ASSEMBLY | | |

D-63XC REV. 9-67

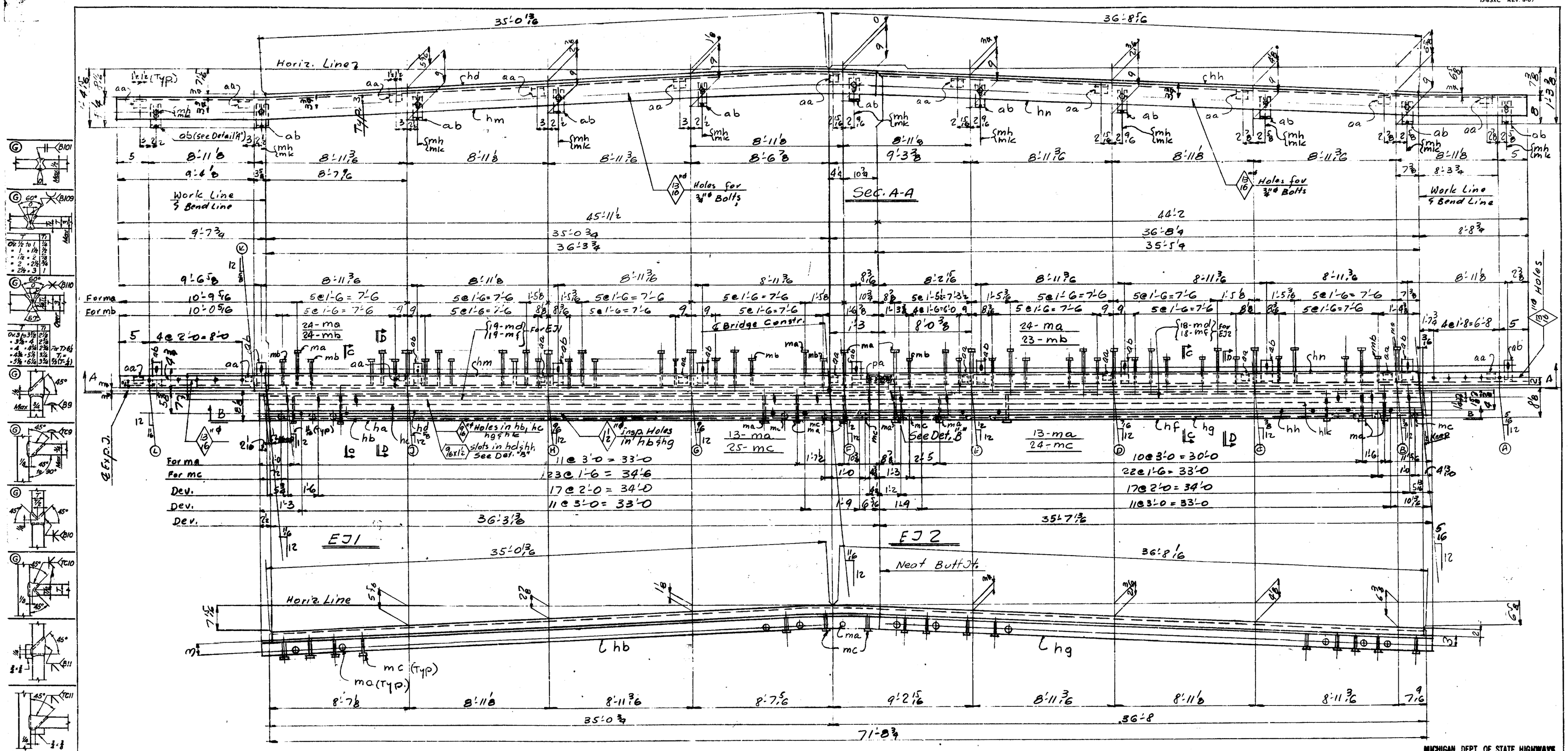

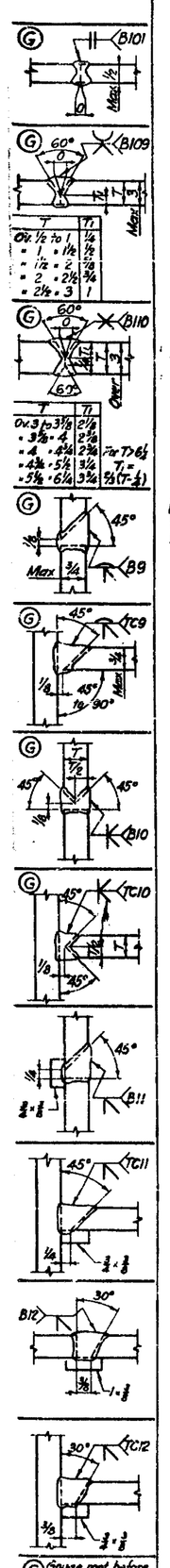

Note to Drawing Room: Do not specify welding process on drawing unless required by job specification.

MICHIGAN DEPT. OF STATE HIGHWAYS
BRIDGE X01 OF 82122K
EVERGREEN ROAD OVER I-96
(JEFFRIES FREEWAY)
DETROIT, (WAYNE COUNTY) MICHIGAN

Expansion Joint

FAB.PLT.03
SEQ. CODE 54606

American Bridge
Division of United States Steel Corporation

FABRICATION ASSIGNED TO Gary
DRAWING MADE BY Gary 32
MADE BY A 2 DATE 12/13/68 CHECKED BY ALH DATE 11/13/69
IN CHARGE OF Augenstine #5559

ORDER NO. K2828
SHEET NO. 201AB

REVISIONS

ZENITH, A & B SMITH CO., PGH., PA. BB652 6-57

D-81KC REV. 3-57

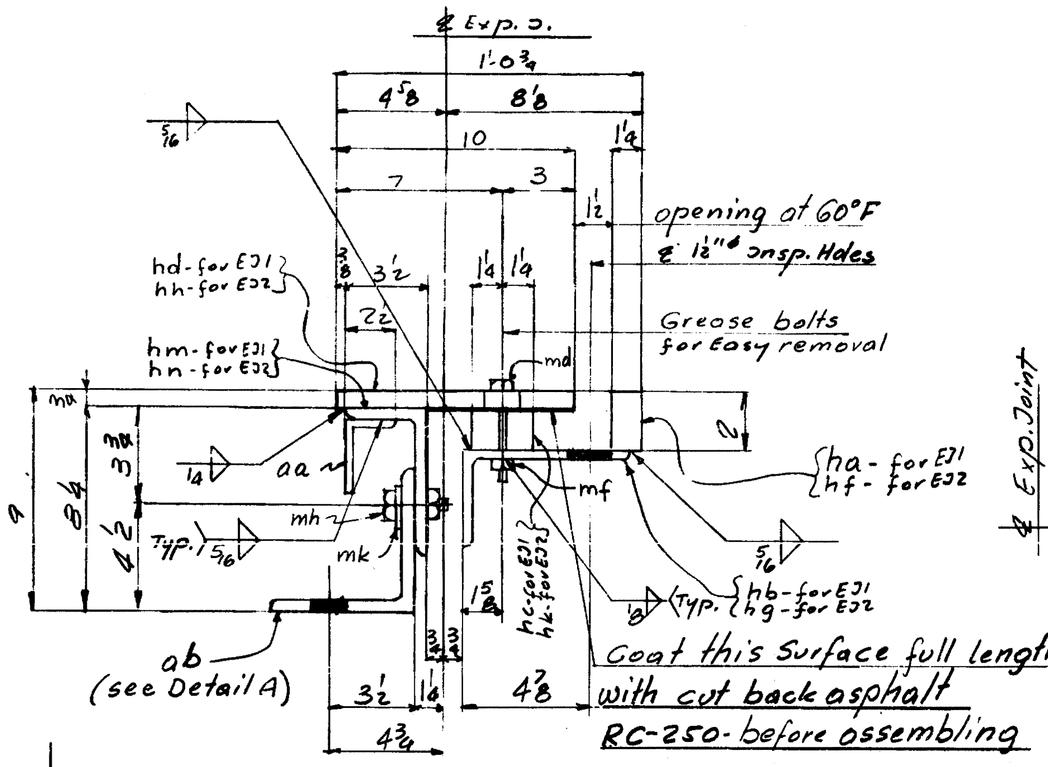

Sec. C-C

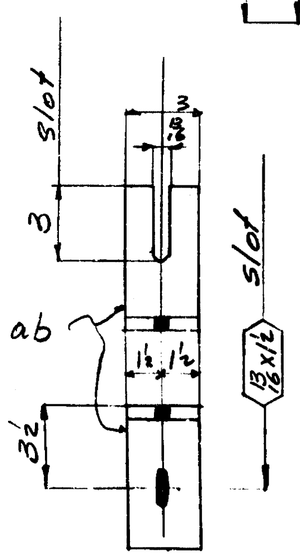

Det. "A"

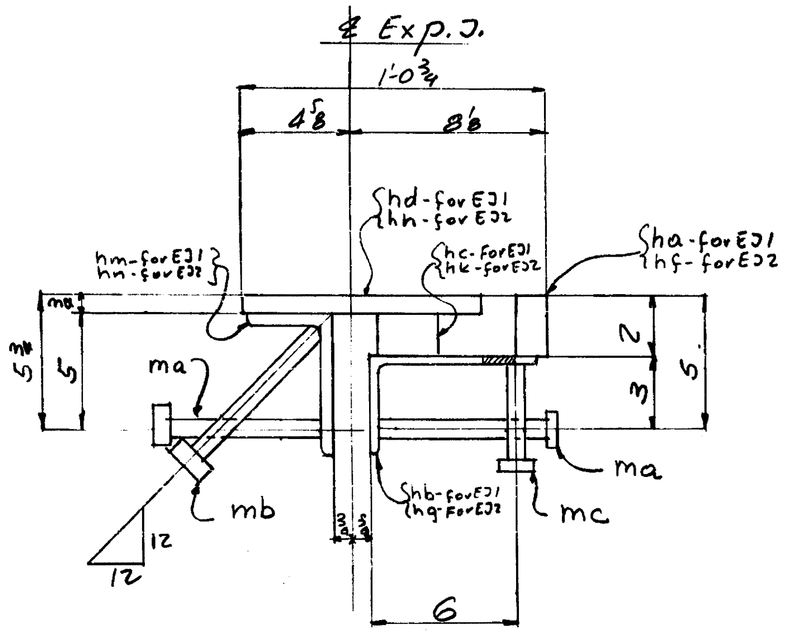

Sec. D-D

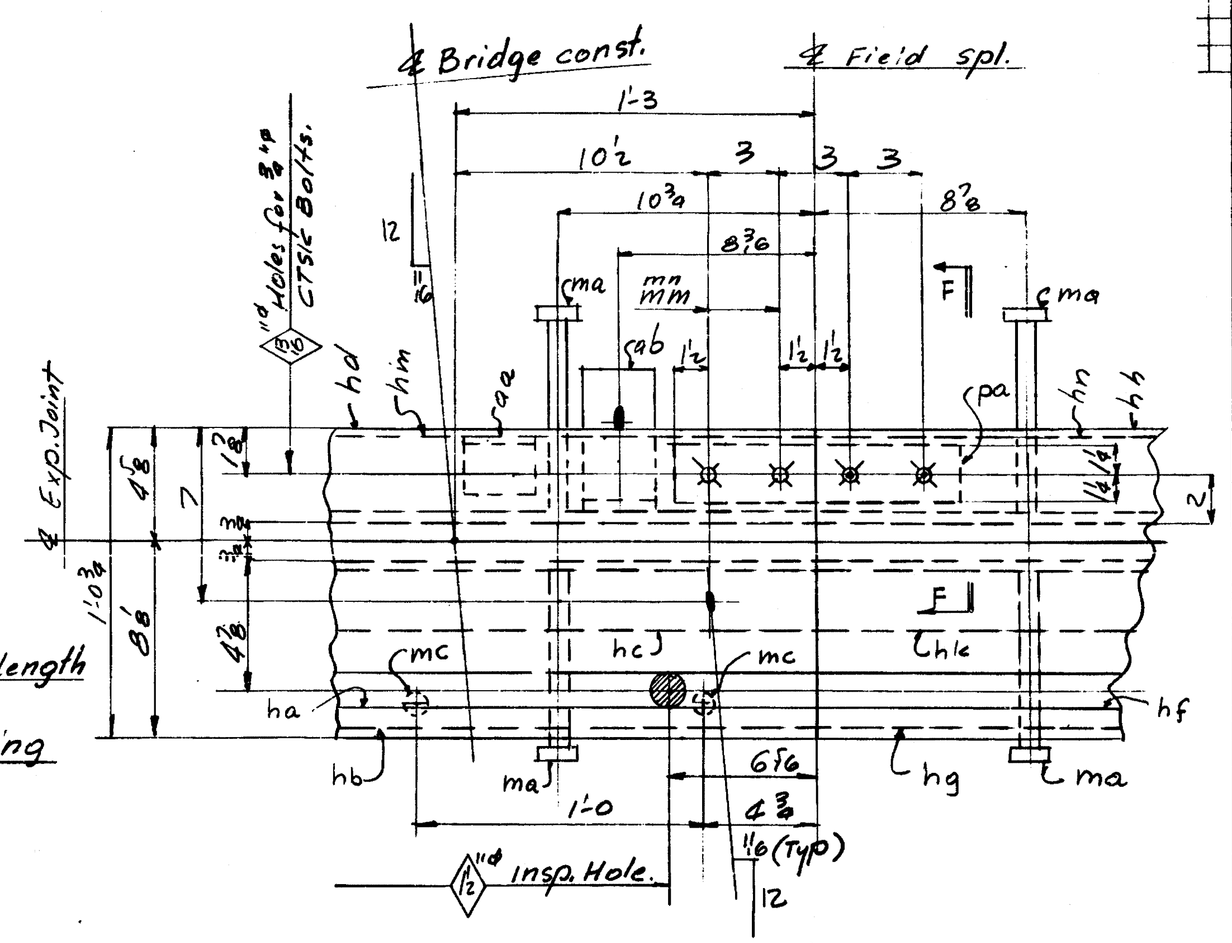

Detail "B"

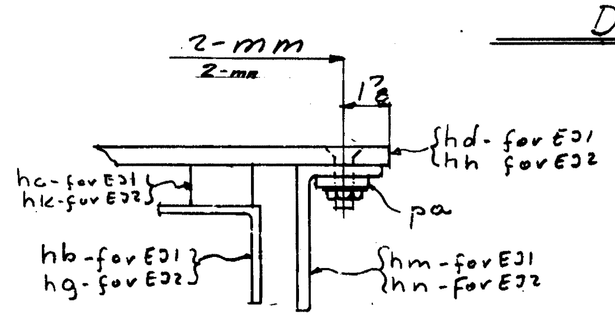

Sec. F-F

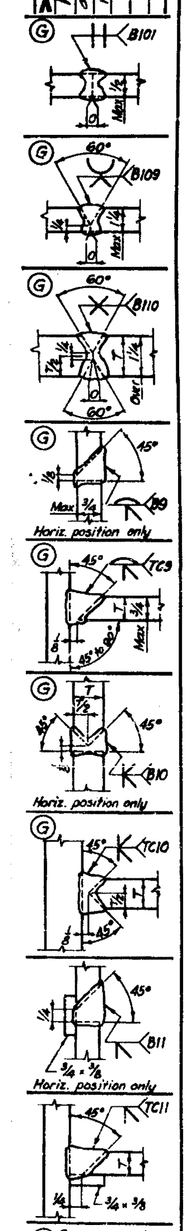

Note to Drawing Room: Do not specify welding process on drawing unless required by job specification. For more detailed information on AISC Standard Practice Groove Welds, see Beam Card 16.

L I N E NO.	TOTAL NO. OF PCS. OR WEIGHT	MATERIAL: NO. OF POS. OR SHEETS	ABBRV. DESC.	DIMENSIONS	LENGTH FEET	LENGTH INCH	FINISH AND TRIM DESC.	FINISH AND TRIM INCH	SHIPPING OR ASSEMBLING MARK	SHIPPING SPECIFICATIONS OR ASSEMBLING REFERENCE	REMARKS	ORDERED	ITEM	CALCULATED WEIGHT FOR ONE SHIP PIECE
1														
2		1		EXPANSION JOINT					201EJ1					
3														
4		1	FLT	2 1/4	36	3 5/16	BEND		ha			36-10	PP019	111/10
5		1	L	7 4 3/8	36	6 3/4	BEND		hb			36-1134	PP044	111/4
6		1	FLT	2½ 1¼	36	4 3/4	BEND		hc			36-714	PP024	111/8
7		1	PL	10 3/8	36	4¾	BEND		hd			36-934	PP002	111/6
8		1	L	6 3½ ½	45	11½	BEND		hm			46-434	PP003	111/2
9	11	6	L	3 2½ 3/8		3			aa		PIN 4.3X3X	30-0	GW	111/23
10	11	6	L	6 6 ½		3			ab			40-0	PP124	111/22
11	74	37	M	3/4" ø Neg/Stop Stud		7			ma		Type M4 Stud mf	3-5/16		M102/16
12	47	24	M	3/4" ø Neg/Stop Stud		8			mb			3-5/16		M102/17
13	49	25	M	3/4" ø Neg/Stop Stud		4			mc			3-5/16		M102/18
14	37	19	M	½" ø Bolts		3½			md		A307	3-5/16		M102/7
15	37	19	M	Sq. Nuts - ½" ø tap					mf		Sq. Nut A307	3-5/16 005		M102/7
16	11	6	PB	⅜ HHN		2¼			mh		A307	S	S	M102/3
17	11	6	WASH	2¼ 1¼ 13/32					mk		A36	S	S	M102/5
18		1	FLT	2½ ½		10			pa				IS	111/22
19		2	M	3/4" ø CTSK-H.S.B							A307	3-5/16		M102/2
20				Hex Nuts		3			mm					
21		2	M	1 5/32" ø BYHL - 3/4" ø Hole					mn		A325 Low Alloy Tens.	S	S	
22														
23														
24														
25														
26														
27														
28		1		EXPANSION JOINT					201EJ2					
29														
30		1	FLT	2 1/4	35	5½	BEND		hf			36-10	PP019	111/11
31		1	L	7 4 3/8	35	7 7/8	BEND		hg				PP044	111/5
32		1	PL	10 3/8	35	5 5/16	BEND		hh			36-934	PP002	111/7
33		1	FLT	2½ 1¼	35	5⅞	BEND		hk			36-714	PP024	111/9
34		1	L	6 3½ ½	44	2 1/16	BEND		hn			46-434	PP003	111/3
35		5	L						aa					
36		5	L						ab					
37		37	M						mg					
38		23	M						mb					
39		24	M						mc					
40		18	M						md					
41		18	M						mf					
42		5	PB						mh					
43		5	WASH						mk					
44														
45														
46														
47		20		Support Bars					201M1					
48		20	FLT	2 3/8		10					Plain Hardware		IS	41/28
49														
50														
51														
52														
53														
54														
55														
56														
57														
58														
59														
60														
61														
62														

K-2828

Gen. Notes:-

Spec:- Mich. State Hwy Specs. for Road & Bridge Constr. & Special Provisions

Material:- ASTM A441 modified cor-ten "B" U.N

Rivets:- None

Open Holes:- As Noted.

Welding:- Yes AWS spec. for welded Hwy & Railway Bridges "USE E70xx LOW HYDROGEN ELECTRODES OR F71-xxxxx OR F72-xxxxx FLUX AND ELECTRODE COMBINATIONS."

Paint:- None

Shop Contact Surfaces:- No

All steel shall be handled carefully and shall be kept free and clean of all foreign materials such as grease, oil, chalk marks, crayon marks, dirt, etc.

All shipping marks shall be made using a steel die.

The rounding of corners will n t be required.

MICHIGAN DEPT. OF STATE HIGHWAYS
BRIDGE X01 OF 82122K
EVERGREEN ROAD OVER I 96
(JEFFRIES FREEWAY)
DETROIT, (WAYNE COUNTY) MICHIGAN

Expansion Joint

USS American Bridge
Division of United States Steel Corporation

FAB. PLT. 03 | STD. CODE 54.06 | COST CENTERS | PAT. BASIS CODE 56 | WEIGHT | REV. NO. | EXCEPTION | SHIP DIVISION | LINE CONTROL 35 | REVISIONS F E D C B A

FABRICATION ASSIGNED TO Gary
DRAWING MADE BY Gary #2
MADE BY M.Z. DATE 12/3/62 CHECKED BY DLH DATE 1/13/63
IN CHARGE OF Augenstine #5559

FOR LOCATION OF SHIPPING PIECES SHOWN ON THIS SHEET REFER TO ERECTION PLANS E6 E7

ORDER NO. K 2828 | SHEET NO. 201B

ZENITH, A & B SMITH CO., PGH., PA. 880052 9-67

B-BISC REV. 3-67

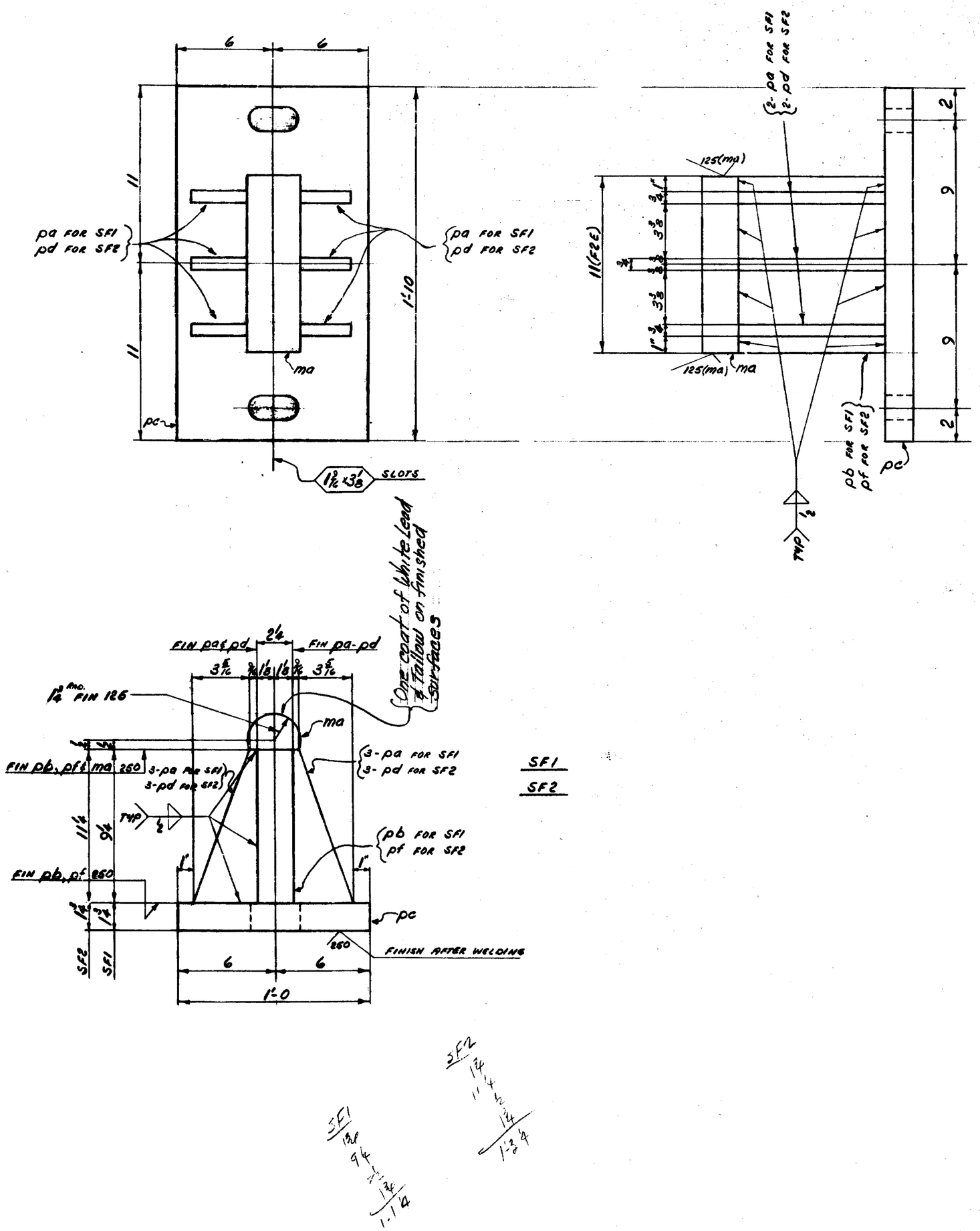

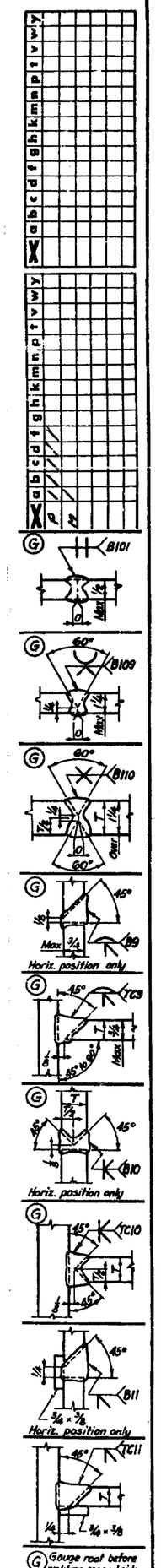

Note to Drawing Room: Do not specify welding process on drawing unless required by job specification. For more detailed information on A&B Standard Practice Grouse Webb, see Beam Card 16.

DIV. 2	3		5	6	7	LINE CO.	TOTAL NO. OF PCS. ON ORDER	MATERIAL: NO. OF PCS. ON SKETCH	ABBRV. DESC.	DIMENSIONS			LENGTH FEET	LENGTH INCH	FINISH AND TRIM DESC.	FINISH AND TRIM INCH	SHIPPING OR ASSEMBLING MARK	SHIPPING SPECIFICATIONS OR ASSEMBLING REFERENCE	REMARKS	ORDERED		CALCULATED WEIGHT FOR ONE SHIP PIECE
						1																
						2																
					6	3		5		FIXED SHOE							202SF1					
						4	41	5	PL	12	1¾		1	10	FIS		PC		ASTM A441 GR. 50	PROMO		106/16
						5		6	PL	9¼	2¼			11	FIXED		Pb		ASTM A441 GR. 50	PROMO		106/17
						6		30	PL	9¼	¾			3⅞			Pa		PC-3/01-3 SHT. 6	34X 30-0	79139	106/18
						7	41	5	RD	3½				11	FAD		ma		234 X	19-7	79038	106/19
						8																
						9																
						10																
						11																
11	11		6	5	3	12		36		FIXED SHOE							202SF2					
						13		36	PL								PC		STANDARD			106/22
						14		36	PL	11	2¼			11¼	FIXED		Pf			W 7X 4-0	79038	106/23
						15		216	PL	11¼	¾			3⅞			Pd		PC-3/01-3 SHT. 6		TS	106/24
						16		36	RD								ma					106/25
						17																
						18																
						19																
						20																
						21																
						22																
						23																
						24																
						25																
						26																
						27																
						28																
						29																
						30																
						31																
						32																
						33																
						34																
						35																
						36																
						37																
						38																
						39																
						40																
						41																
						42																
						43																
						44																
						45																
						46																
						47																
						48																
						49																
						50																
						51																
						52																
						53																
						54																
						55																
						56																
						57																
						58																
						59																
						60																
						61																

GEN. NOTES:

MAT'L: ASTM A441 MODIFIED COR-TEN B
WELDING: AWS E8018 CI
FINISHINGS: AS NOTED

All steel shall be handled carefully and shall be kept free and clean of all foreign materials such as grease, oil, chalk marks, crayon marks, dirt, etc.
All shipping marks shall be made using a steel die.
The rounding of corners will not be required.

SPEC'S: MDSH-1967 EDITION
CURRENT AASHO

PAINT: NONE (except white lead & Tallow on finished surfaces)
SHOP CONTACT SURFACES: NO

MICHIGAN DEPT. OF STATE HIGHWAYS
BRIDGE XOT OF 82122K
EVERGREEN ROAD OVER I-96
(JEFFRIES FREEWAY)
DETROIT, (WAYNE COUNTY) MICHIGAN
FIXED SHOE

FAB. PLT. 03 | SEQ. CODE 54607 | COST CENTERS | PAY MASS CODE 510 | LINE CONTROL 1D

WEIGHT | EXCEPTION | REV. NO. | SHIP DIVISION

REVISIONS: F, E, D, C, B, A

American Bridge
Division of United States Steel Corporation

FABRICATION ASSIGNED TO: GARY
DRAWING MADE BY: GARY #2
MADE BY: JLA DATE 4/10/68 CHECKED BY: RWB DATE 4/16/68
IN CHARGE OF: AUGENSTINE-#5669

FOR LOCATION OF SHIPPING PIECES SHOWN ON THIS SHEET REFER TO ERECTION PLANS.
EG-E7-E8 & E9

ORDER NO: K2828
SHEET NO: 202

ROY. BILL: 106

ZENITH, A & B SMITH CO. PGH., PA. 8B092 8-67

D-8102 REV. 3-67

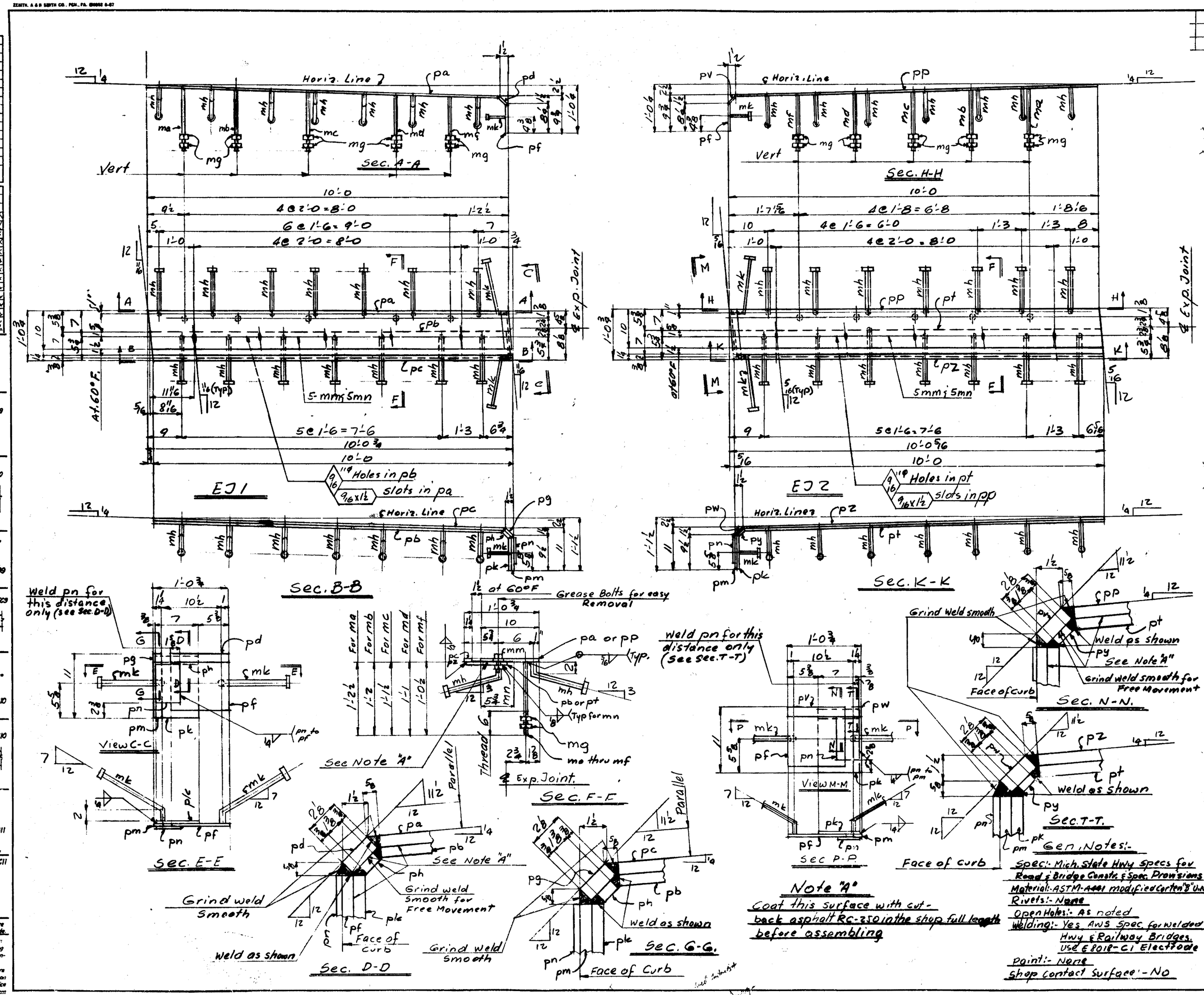

LINE NO.	TOTAL NO. OF PCS. ON ORDER	NO. OF PCS. ON SKETCH	ASSBY DESC.	MATERIAL DIMENSIONS	LENGTH FEET	LENGTH INCH	FINISH AND TRIM DESC.	FINISH AND TRIM INCH	SHIPPING OR ASSEMBLING MARK	SHIPPING SPECIFICATIONS OR ASSEMBLING REFERENCE	REMARKS	ORDERED	ITEM	CALCULATED WEIGHT FOR ONE SHIP PIECE
1														
2		1		Expansion Joint					EJ1					
3														
4		1		PL 10 1/2	9	10 1/2			pa			10X 31.15# 34X 30-0	M270	111/15
5		1		FLT 7 1/2	9	10 1/2			pb				M137	111/21
6		1		FLT 1 1/8 1/2	9	9 15/16			pc				M137	111/18
7		1		FLT 7/8 11/16		10 1/2			pd			FIN 3/4	TS	111/14
8	2	1		FLT 7/8 1/2		10			pf				M137	111/13
9		1		FLT 7/8 11/16		13 1/8			pg			FIN 3/4	TS	111/17
10		1		FLT 1 3/8 1/2		7 1/16			ph				M137	111/16
11	2	1		FLT 7 1/2		8 3/8			pk				M137	
12	2	1		FLT 1 1/4 1/2		8 3/8			pm				M137	
13	2	1		FLT 4 1/4		6 1/2			pn		⊗	4X 3/4 X 3-0	GW	111/12
14	2	1		RD 3/4	1	2 1/2			ma		A36	MARCH SHOP	S	
15	2	1		RD 3/4	1	2			mb		A36		S	
16	2	1		RD 3/4	1	1 1/2			mc		A36		S	
17	2	1		RD 3/4	1	1			md		A36		S	
18	2	1		RD 3/4	1	0 1/2			mf		A36		S	
19	20	10	M	Std. Sq. Nut 3/4" Tap					mg				S S	102/6
20	28	14	M	3/4" Nelson Stud			BEND					3-57W65		
21				Type H4		11			mh		Std			103/12
22	4	2	M	3/4" Nelson Stud			BEND					3-57W65		
23				Type H4	1	2			mk		std.			103/8
24	10	5	M	5/8" Bolt		2			mm		A307			102/8
25	10	5	M	Sq. Nuts 5/8" Tap					mn		Sq. Nut A307	3S2005		102/8
26														
27														
28														
29														
30														
31		1		Expansion Joint					EJ2					
32														
33		1	PL	10 1/2	9	10 1/2			pp				M270	111/15
34		1	FLT	7 1/2	9	10 1/2			pt				M137	111/21
35		1	FLT	1 1/4 1/2	9	9 15/16			pz				M137	111/18
36		1	FLT	2 1/8 11/16		10 1/2			pv			FIN 3/4	TS	
37		1	FLT						pf					
38		1	FLT	2 1/8 11/16		15 1/2			pw			FIN 3/4	TS	
39		1	FLT	1 3/8 1/2		7 1/16			py				M137	
40		1	FLT						pk					
41		1	FLT						pm					
42		1	FLT						pn					
43		1	RD						ma					
44		1	RD						mb					
45		1	RD						mc					
46		1	RD						md					
47		1	RD						mf					
48		10	M						mg					
49		14	M						mh					
50		2	M						mk					
51		5	M						mm					
52		5	M						mn.					
53														
54														
55														
56														
57														
58														
59														
60														
61														
62														

⊗ NOTE
LINE 13 - PL 48 X 4 X 8-0
SAVE BALANCE FOR LATER DIVS.

K-2828

All steel shall be handled carefully and shall be kept free and clean of all foreign materials such as grease, oil, chalk marks, crayon marks, dirt, etc.
All shipping marks shall be made using a steel die.
The rounding of corners will not be required.

MICHIGAN DEPT. OF STATE HIGHWAYS
BRIDGE X01 OF 82122K
EVERGREEN ROAD OVER I-96
(JEFFRIES FREEWAY)
DETROIT, (WAYNE COUNTY) MICHIGAN

Expansion Joint

American Bridge
Division of United States Steel Corporation

FABRICATION ASSIGNED TO: Gary
DRAWING MADE BY: Gary #2
MADE BY: M.Z. DATE: 12/17/66 CHECKED BY: ALH DATE: 1/26/68
IN CHARGE OF: Augenstine # 5559

DROCH NO. K 2828
SHEET NO. 203

FAB. PLT. 03 | SEQ. CODE 5416 08
COST CENTERS: BOND, NO CHARGE, PROD., NON PROD.
PAY BASIS CODE 56
WEIGHT REV. NO. | EXCEPTION SHIP DIVISION | LINE CONTROL 42
REVISIONS: F, E, D, C, B, A

FOR LOCATION OF SHIPPING PIECES SHOWN ON THIS SHEET REFER TO ERECTION PLANS E6 & E7

Gen. Notes:-
Spec:- Mich. State Hwy Specs for Road & Bridge Constr. & Spec. Provisions
Material:- ASTM-A441 modified Corten "B" U.N.
Rivets:- None
Open Holes:- As noted
Welding:- Yes AWS Spec. for Welded Hwy & Railway Bridges. Use E8018-C1 Electrode
Paint:- None
Shop contact surface:- No

ZENITH, A. & B. SMITH CO. - PGH., PA. 3-1123-964

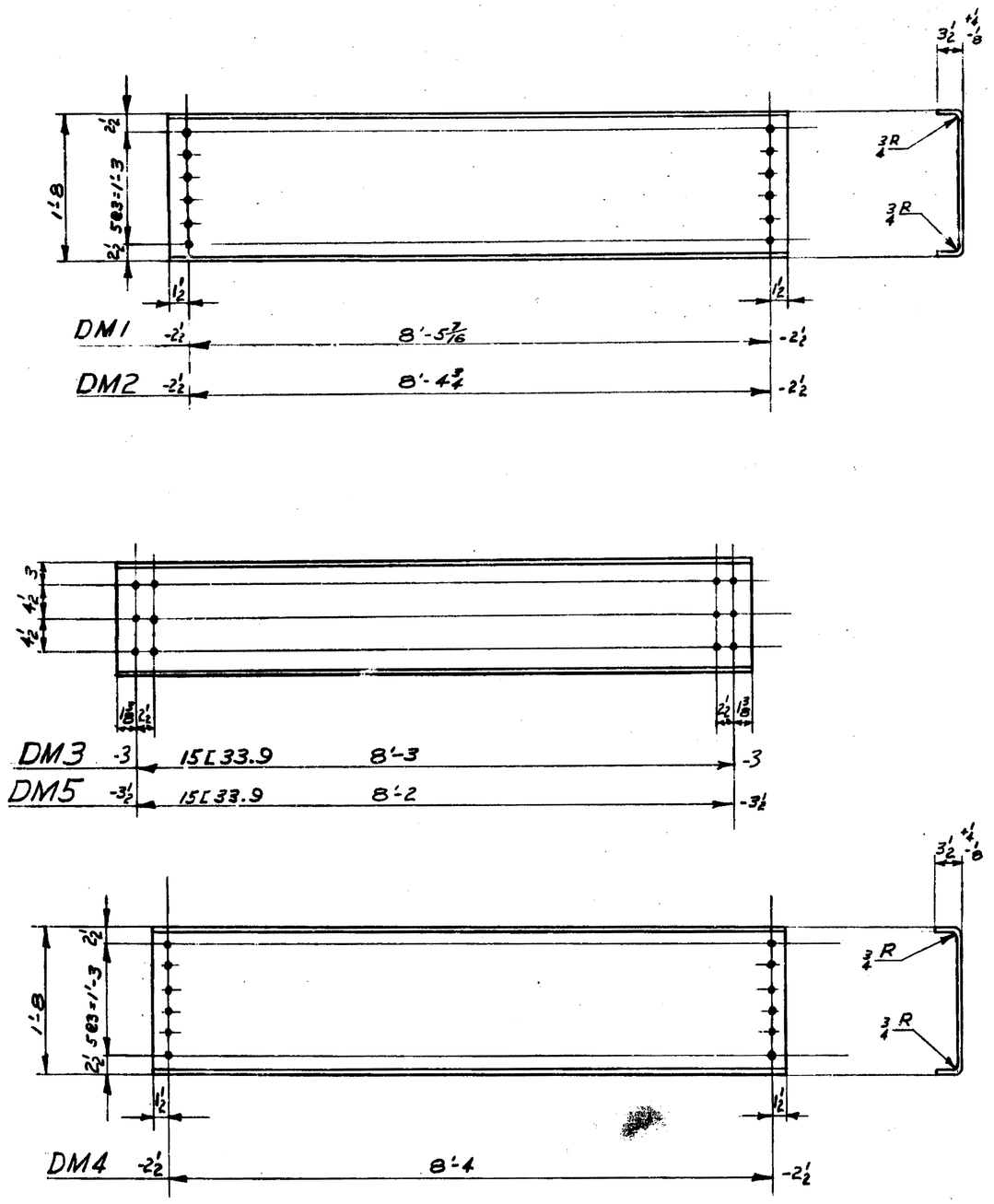

DIV										
10	9	8	7	6	5	4	3	2		
								10		
			20		10	20	20			
		10	10		20	20	10			
50	60	40	32	58	50	52	60	40		

LIST NO.	TOTAL NO. OF PCS. ON ORDER	MATERIAL: NO. OF PCS. ON SHIPTICK	ABBRV. DESC.	DIMENSIONS	LENGTH FEET	LENGTH INCH	FINISH AND TEST DESC.	FINISH AND TEST INCH	SHIPPING OR ASSEMBLING MARK	SHIPPING SPECIFICATIONS OR ASSEMBLING REFERENCE	REMARKS	ORDERED	ITEM	DRAWING NUMBER
1														
2														
3		10		DIAPHRAGMS					204DM1					
4		10	PL	10 3/8 × 3/8	2	3	BEND				LOOSE	1042 X 20-7/8	2002	201-12
5														
6														
7		10		DIAPHRAGMS					204DM2					
8		10	PL	10 3/8 × 3/8	2	3	BEND				LOOSE	1038 X 20-7/8	2002	201-13
9														
10		70		DIAPHRAMS					204DM5					
11		70		DIAPHRAGMS					204DM3					
12		70	CH	15 33.9	8	3 3/4					LOOSE	111 43-1	PROM	201-16 301-24
13		70	CH	15 33.9	8	4 1/2					LOOSE	111 43-24	PROM	201-16 301-25
14														
15		442		DIAPHRAGMS					204DM4					
16		442	PL	10 3/8 × 3/8	2	3	BEND				LOOSE	1021 10 3/8 × 20-7/8	2001	201-17 301-26
17														
18														
19														
20														
21														
22														
23														
24														
25														
26														
27														
28														
29														
30														
31														
32														
33														
34														
35														
36														
37														
38														
39														
40														
41														
42														
43														
44														
45														
46														
47														
48														
49														
50														
51														
52														
53														
54														
55														
56														
57														
58														
59														
60														
61														
62														

K2828

MATERIAL: ASTM A441 MOD (CORTEN "B")
RIVETS: NONE
BOLTS: 1025 - 12, 1028 - 16
WELDING: NONE

PAINT: NO
SHOP CONTACT SURFACES: NO

All steel shall be handled carefully and shall be kept free and clean of all foreign materials such as grease, oil, chalk marks, crayon marks, dirt, etc.
All shipping marks shall be made using a steel die.
The founding of corners will not be required.

MICHIGAN DEPT. OF STATE HIGHWAYS
BRIDGE X01 OF 82122K
EVERGREEN ROAD OVER I-96
(JEFFRIES FREEWAY)
DETROIT (WAYNE COUNTY) MICHIGAN

DIAPHRAGMS

American Bridge Division of United States Steel

FAB. PLT. 03 | SEQ. CODE 54609 | BSD | NOCHGR | COST CENTERS: PROD. | NON PROD | PAY BASIS CODE 56 | WEIGHT REV. NO. | EXCEPTION SHIP DIVISION | LIST CONTROL 10

F		
E		
D		
C		
B		
A	3-7-69	D

REVISIONS

FABRICATION ASSIGNED TO: GARY
DRAWING MADE BY: GARY #2
MADE BY: E.B. DATE 12-30-68 CHECKED BY: D.Z. DATE 1-24-69
IN CHARGE OF: AUGENSTINE 219-944-5559

FOR LOCATION OF SHIPPING PIECES SHOWN ON THIS SHEET REFER TO ERECTION PLANS: E6-E7-E8-E9-E10

ORDER NO. K2828 | SHEET NO. 204

ADV. BILL 201-301

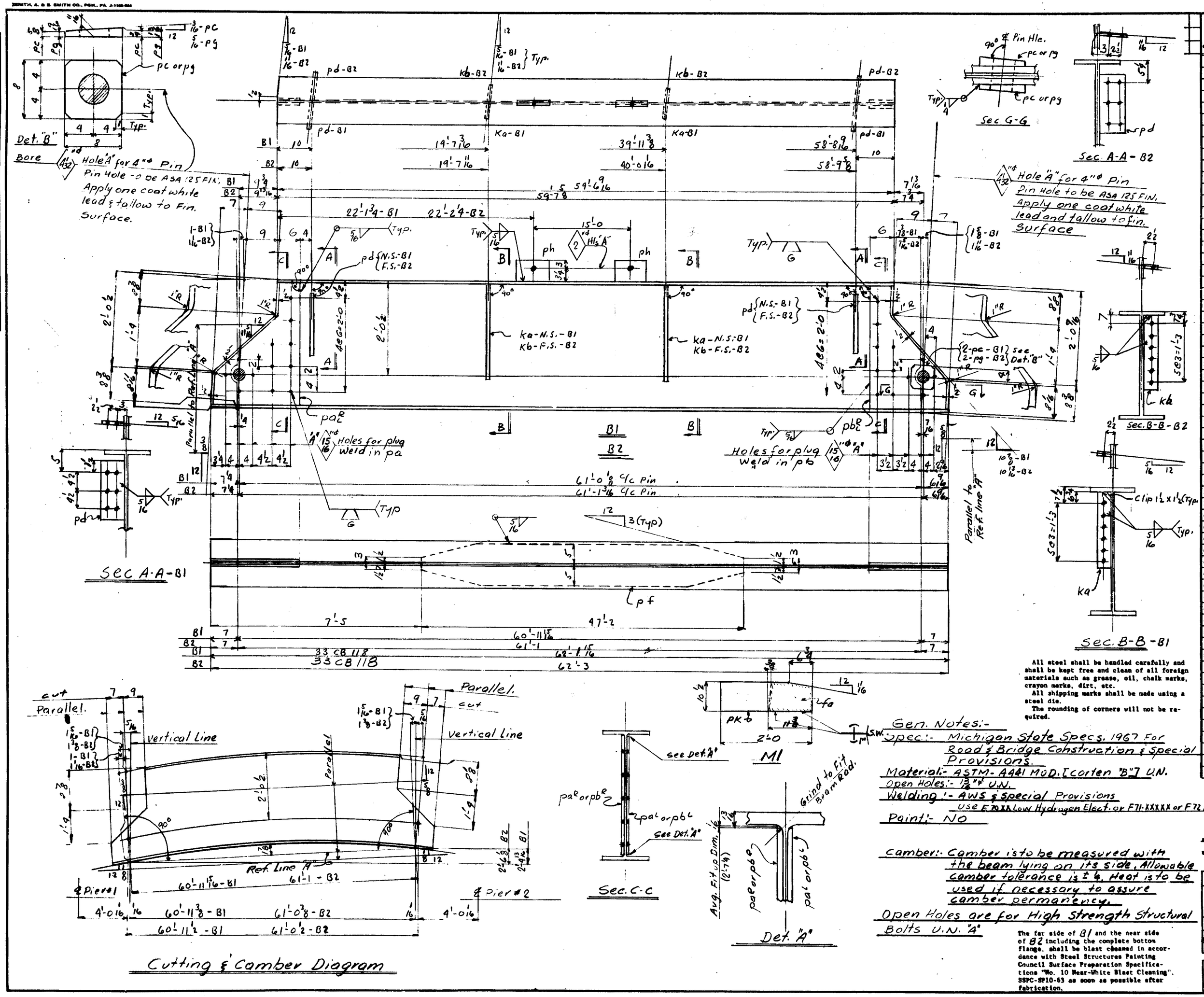

L I N E NO.	TOTAL NO. OF PCS. ON ASSEM.	NO. OF PCS. ON ASSEM.	ASSEM. MARK	MATERIAL DIMENSIONS	LENGTHS FEET	LENGTHS INCHES	FINISH DESC.	FINISH INCHES	SHIPPING OR ASSEMBLING MARK	SHIPPING SPECIFICATIONS OR ASSEMBLING REFERENCE	REMARKS	ORDERED		CALCULATED WEIGHT FOR ONE SHIP PIECE
1														
2		1		BEAM					205B1	62'				
3		1	CB	33 118	62	2 3/8						W-6	2001	201-2
4	2	1	PL	10 1	47	2			pf		Coll. to	31 1/2 x 47 1/2	2001	201-3
5	2	2	PL	22 3/8	2	7 1/8			pa R L			2 3/8 x 7 1/8 x 22 3/8	9901	201-7
6	2	2	PL	20 1/2 5/8	2	7 1/8			pb R L			2 3/8 x 7 1/8 x 20 1/2	9901	201-7
7		2	FLT	8 7 13/16		8	BIS		pc			8 x 1	9911	201-29
8	4	2	FLT	6 1/2 1/2	1	0			pd			6 1/2 x 1/2	9910	201-6
9		2	FLT	3 1/2 1/2	1	11 1/4	TIE		ka			3 1/2 x 11 1/4	9905	201-9
10	4	2	FLT	6 1/4 1/2		8			ph	A36			TS	
11														
12														
13														
14														
15														
16		1		BEAM					205B2	62'				
17		1	CB	33 118	62	2 1/16						W-6	2001	201-2
18		1	PL						pf					201-3
19		2	PL						pa R L					201-7
20		2	PL						pb R L					201-7
21		2	FLT	8 7 13/16		8	BIS		pg				9911	201-29
22		2	FLT						pd					201-6
23		2	FLT	3 1/2 1/2	1	11 1/2			Kb				9905	201-9
24		2	FLT						ph					
25														
26														
27														
28		11		Stay Plates					205M1					
29		11	PL	10 1/2 5/8		20			pk			9 5/8 x 20 3/4	9004	201-28
30		11	STR	10 1/2 1/2		11 3/4			fa	A303			TS	3
31														
32														
33														
34														
35														
36														
37														
38														
39														
40														
41														
42														
43														
44														
45														
46														
47														
48														
49														
50														
51														
52														
53														
54														
55														
56														
57														
58														
59														
60														
61														
62														

All steel shall be handled carefully and shall be kept free and clean of all foreign materials such as grease, oil, chalk marks, crayon marks, dirt, etc.
All shipping marks shall be made using a steel die.
The rounding of corners will not be required.

Gen. Notes:-
Spec:- Michigan State Specs. 1967 For Road & Bridge Construction & Special Provisions.
Material:- ASTM-A441 MOD. [Corten "B"] U.N.
Open Holes:- 13/16" ϕ U.N.
Welding:- AWS & Special Provisions
Use E70XX Low Hydrogen Elect. or F71-XXXXX or F72-XXXXX Flux & Elect. Combinations
Paint:- No

Camber:- Camber is to be measured with the beam lying on its side. Allowable camber tolerance is ± ¼. Heat is to be used if necessary to assure camber permanency.

Open Holes are for High Strength Structural Bolts U.N. "A"

The far side of B1 and the near side of B2 including the complete bottom flange, shall be blast cleaned in accordance with Steel Structures Painting Council Surface Preparation Specifications "No. 10 Near-White Blast Cleaning". SSPC-SP10-63 as soon as possible after fabrication.

K-2828

MICHIGAN DEPT. OF STATE HIGHWAYS
STATE ROUTE NO. OF 82122K
EVERGREEN ROAD OVER I-96
(JEFFRIES FREEWAY)
DETROIT, (WAYNE COUNTY) MICHIGAN

BEAMS @SPAN #2
Line A&L

American Bridge Division of United States Steel

FABRICATION ASSIGNED TO Gary
DRAWING MADE BY Gary #2
MADE BY WP DATE 1-13-69 CHECKED BY ALH DATE 2/3/69
IN CHARGE OF Augenstine #5559

ORDER NO. K2828
SHEET NO. 205

FOR LOCATION OF SHIPPING PIECES SHOWN ON THIS SHEET REFER TO ERECTION PLANS.
E6

ADV. BILL

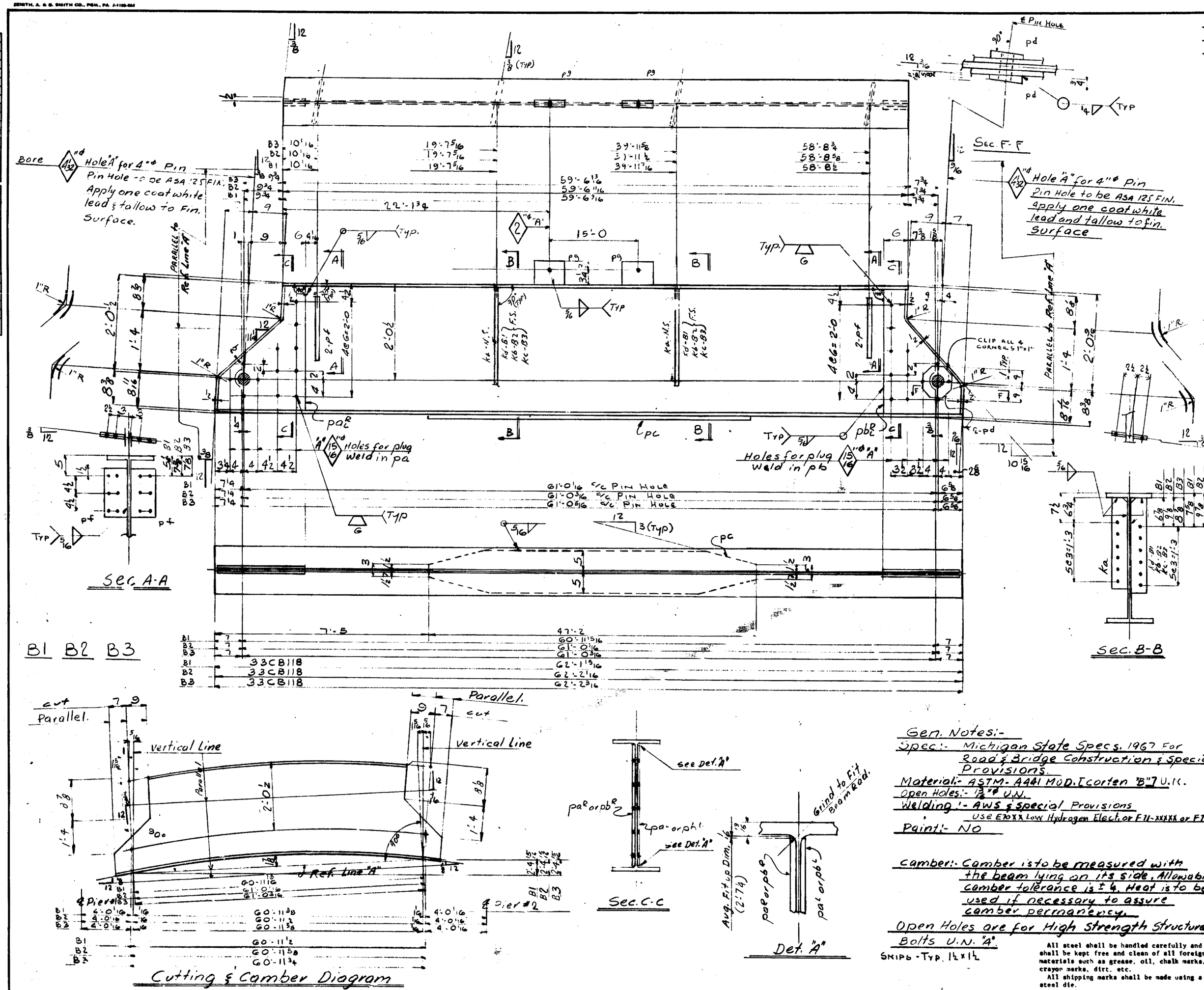

LINE NO.	TOTAL NO. OF PCS. OR ASSEMBLIES	NO. OF PCS. OR ASSEMBLIES	ASSEM. SECT.	MATERIAL DIMENSIONS	LENGTH FEET	LENGTH INCHES	FINISH AND TRIM SECT.	FINISH AND TRIM INCH	SHIPPING OR ASSEMBLING MARK	SHIPPING SPECIFICATIONS OR ASSEMBLING REFERENCE	REMARKS	ORDERED	ITEM	CALCULATED WEIGHT FOR ONE SHIP PIECE
1		1		BEAM					206B1	62'				
2		1		BEAM					206B2	62'				
3		1		BEAM					206B3	62'				
4														
5		1	CB	33 118	62	7¾				B1		62-6	20007	20½
6		1	CB	33 118	62	7¾				B2		62-6	20007	
7		1	CB	33 118	62	7¾				B3		62-6	20007	
8		6	PL	22¾ ⅝	2	7¾			pa R		23 x 1.76	50 x 1.76	79107	201/67
9		6	PL	20½ ⅝	2	7¾			pb L		27 x 2.16	50 x 2.16	79107	
10		3	PL	10 1	47	9			pc		Cov. Pl.	83 x 47.9	20006	201/03
11		6	FLT	8 ⅝ ¾		8	BIS		pd			3x1 80.35	79111	201/29
12		6	FLT	3½ ½	1	11⅛	TIE		ka			3x½ 32.5	79009	201/29
13		12	FLT	6½ ½	1	0			pf			6½x½ 20.0	79010	201/27
14		2	FLT	3½ ½	2	1⅛	TIE		Kb	B2			79009	201/29
15		2	FLT	3½ ½	2	1⅛	TIE		Kc	B3			79009	201/29
16		2	FLT	3½ ½	1	11⅛	TIE		Kd	B1			79009	
17														
18		6	FLT	64 ½		8			pg		A36		IS	
19														
20														
21														
22														
23														
24														
25														
26														
27														
28														
29														
30														
31														
32														
33														
34														
35														
36														
37														
38														
39														
40														
41														
42														
43														
44														
45														
46														
47														
48														
49														
50														
51														
52														
53														
54														
55														
56														
57														
58														
59														
60														
61														
62														

K-2828

Gen. Notes:-
Spec:- Michigan State Specs. 1967 For Road & Bridge Construction & Special Provisions.
Material:- ASTM-A441 MOD. [Corten "B"] U.N.
Open Holes:- 1½" ϕ U.N.
Welding:- AWS & Special Provisions
Use E70XX Low Hydrogen Elect. or F7X-XXXXX or F72-XXXXX Flux & Elect. Combinations
Paint:- No

Camber:- Camber is to be measured with the beam lying on its side. Allowable camber tolerance is ± ¼. Heat is to be used if necessary to assure camber permanency.

Open Holes are for High Strength Structural Bolts U.N. "A".

SKIPB - Typ. 1½ x 1½

All steel shall be handled carefully and shall be kept free and clean of all foreign materials such as grease, oil, chalk marks, crayon marks, dirt, etc.
All shipping marks shall be made using a steel die.
The rounding of corners will not be required.

MICHIGAN DEPT. OF STATE HIGHWAYS
STATE ROAD OF 82122K
EVERGREEN ROAD OVER I-96
(JEFFRIES FREEWAY)
DETROIT, (WAYNE COUNTY) MICHIGAN

BEAM @SPAN #2
LINES B-C-D

American Bridge Division of United States Steel

FABRICATION ASSIGNED TO Gary
DRAWING MADE BY Gary #2
MADE BY J DATE 1-69 CHECKED BY AHH DATE 2/3/69
IN CHARGE OF Augenstine #5559

ORDER NO. K2828
SHEET NO. 206

FOR LOCATION OF SHIPPING PIECES SHOWN ON THIS SHEET REFER TO ERECTION PLANS.
E6

REVISIONS

ADV. BILL

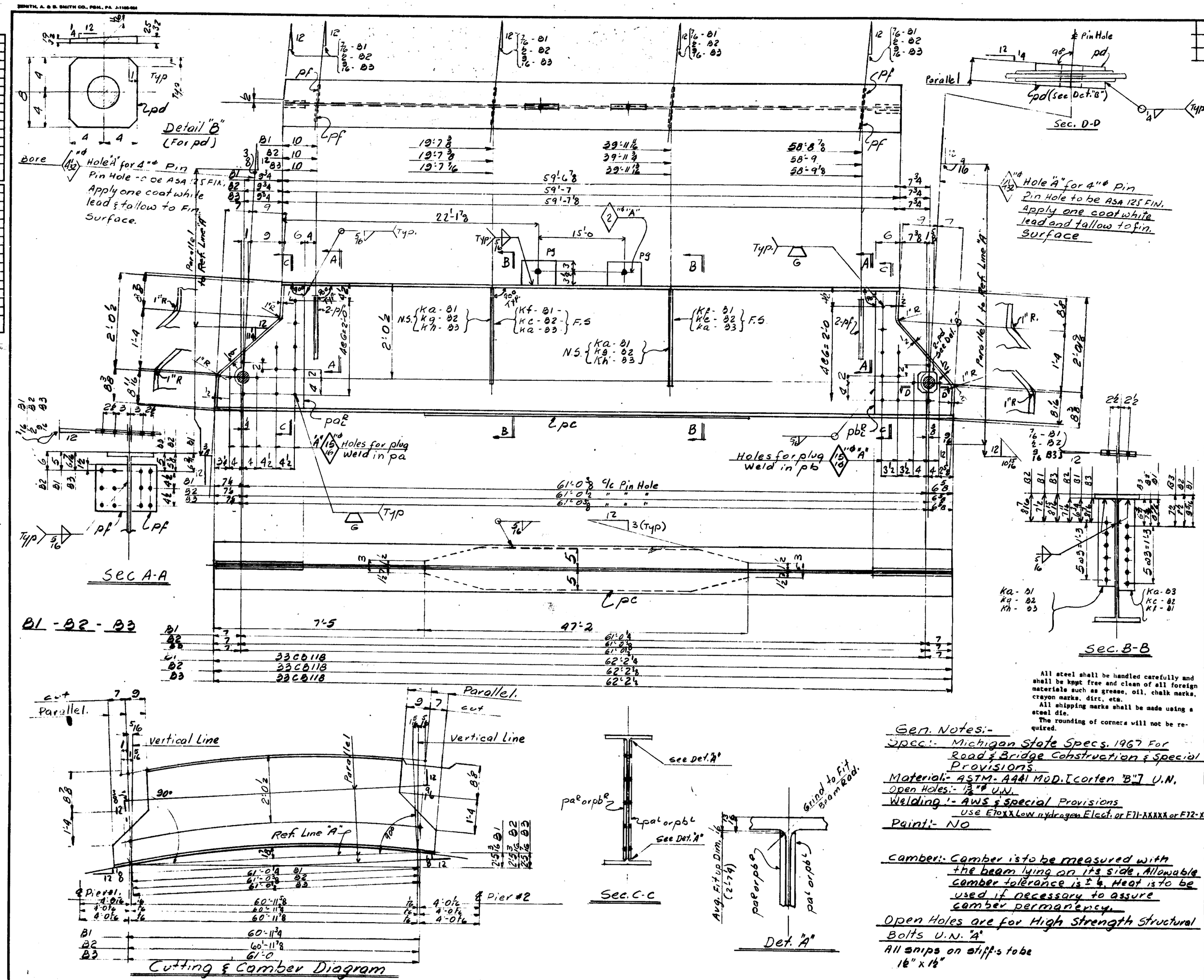

All steel shall be handled carefully and shall be kept free and clean of all foreign materials such as grease, oil, chalk marks, crayon marks, dirt, etc.

All shipping marks shall be made using a steel die.

The rounding of corners will not be required.

Gen. Notes:-

Spec:- Michigan State Specs. 1967 For Road & Bridge Construction & Special Provisions.

Material:- ASTM-A441 MOD. [Corten "B"] U.N.

Open Holes:- 13/16" U.N.

Welding:- AWS & Special Provisions
use E70XX Low Hydrogen Electr. or F71-XXXXX or F72-XXXXX Flux & Electr. Combinations

Paint:- No

Camber:- Camber is to be measured with the beam lying on its side. Allowable camber tolerance is ± 1/4. Heat is to be used if necessary to assure camber permanency.

Open Holes are for High Strength Structural Bolts U.N. "A"

All snips on stiffs to be 16" x 1½"

1																		
2		1		BEAM							207 B1	62'						
3		1	CB	33	118	62	2¾							1/2-16	2007	201-02		
4	3/4	2	PL	22½	¾	2	7¼				pa R		89 22½ 74 Cut Ex 3	89 22½ 74 43 3¾	2M07	201-07		
5	3/4	2	PL	20½	¾	2	7¼				pb L		27 20½ 74 Cut Ex 3		2M07	201-07		
6	3	1	PL	10	1	47	2				pc		Cov. R	83X 47-2	2006	201-03		
7	6	2	FLT	8	19 22 25 28		8	BIS			pd			8X1 30 AS	2M11	201-29		
8	12	4	FLT	6½	½	1	10				pf			6X1 20 0	2M10	201-27		
9	4	2	FLT	3½	½	1	11¼	TIE			Ka			19 4	2M04	201-23		
10																		
11		2	FLT	3½	½	2	1	TIE			Kf				2M04	201-23		
12	6	2	FLT	6¼	½		8				Pg		A36			IS		
13																		
14																		
15																		
16																		
17																		
18																		
19		1		BEAM							207 B2	62'						
20		1	CB	33	118	62	2¾							1/2-16	2007	201-02		
21		2	PL								pa R					201-07		
22		2	PL								pb L					201-07		
23		1	PL								pc					201-03		
24		2	FLT								pd					201-29		
25		4	FLT								pf					201-27		
26		2	FLT	3½	½	2	0¼	TIE			Kc				2M04	201-23		
27																		
28		2	FLT	3½	½	2	0¼	TIE			Kg				2M04	201-23		
29		2	FLT								Pg							
30																		
31																		
32																		
33																		
34																		
35																		
36		1		BEAM							207 B3	62'						
37		1	CB	33	118	62	2¾							1/2-16	2007	201-02		
38		2	PL								pa R					201-07		
39		2	PL								pb L					201-07		
40		1	PL								pc					201-03		
41		2	FLT								pd					201-29		
42		4	FLT								pf					201-27		
43		2	FLT								Ka					201-23		
44																		
45		2	FLT	3½	½	2	0¼	TIE			Kh				2M04	201-23		
46		2	FLT								Pg							
47																		
48																		
49																		
50																		
51																		
52																		
53																		
54																		
55																		
56																		
57																		
58																		
59																		
60																		
61																		
62																		

K2828

MICHIGAN DEPT. OF STATE HIGHWAYS
BRIDGE XOI OF 82122K
EVERGREEN ROAD OVER I-96
(JEFFRIES FREEWAY)
DETROIT, (WAYNE COUNTY) MICHIGAN

BEAMS @ SPAN #2

American Bridge Division of United States Steel

FABRICATION ASSIGNED TO: Gary

DRAWING MADE BY: Gary #2

MADE BY: T.S. DATE: 1-15-69 CHECKED BY: ALW DATE: 2/3/69

IN CHARGE OF: Augenstine # 5559

FOR LOCATION OF SHIPPING PIECES SHOWN ON THIS SHEET REFER TO ERECTION PLANS: E6

ORDER NO. K2828

SHEET NO. 207

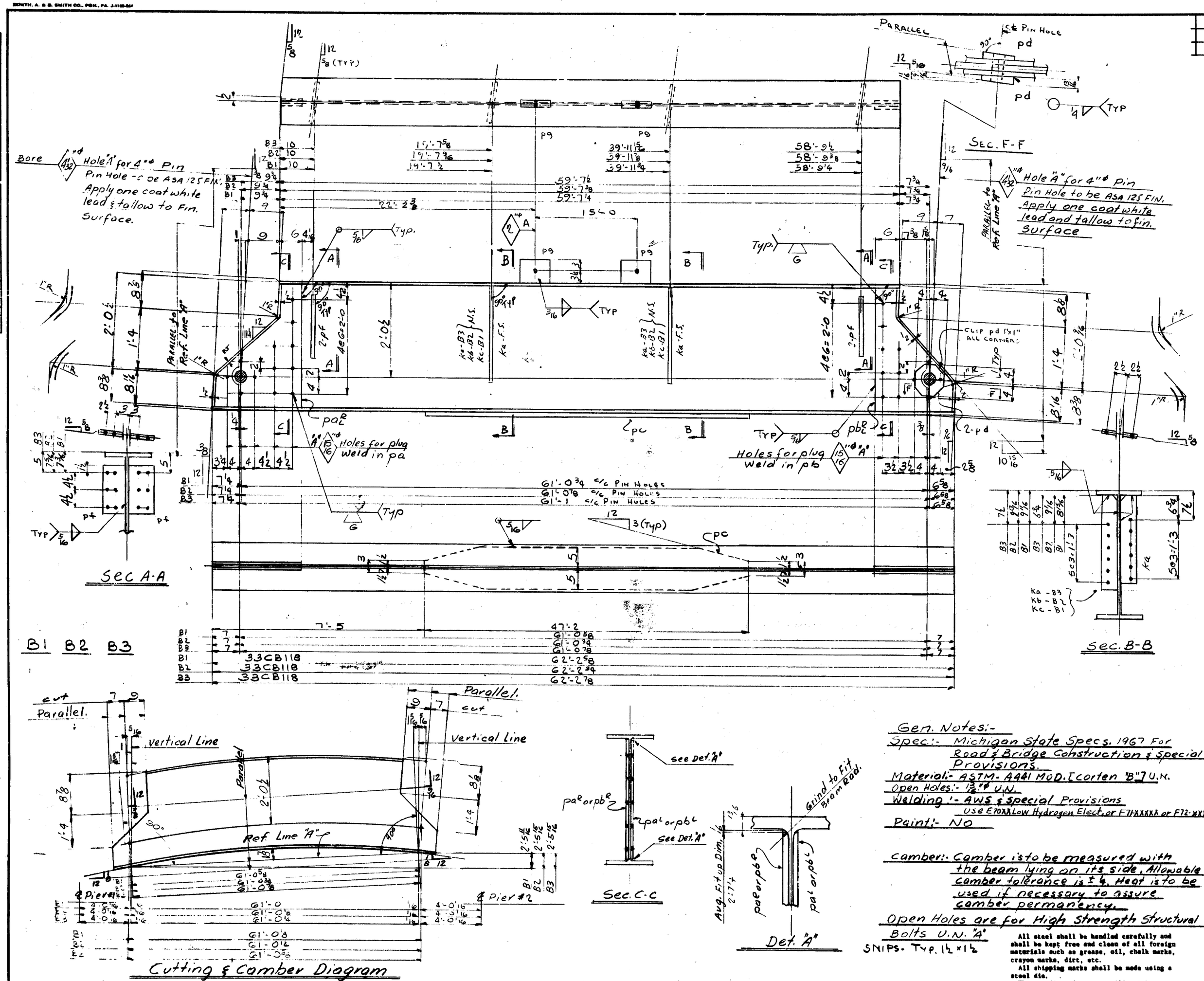

Line No.	Total No. of Pcs. on Sketch	No. of Pcs. on Assembly	Assembly Desc.	Material Dimensions			Length Feet	Length Inch	Finish Desc.	Finish Inch	Shipping or Assembling Mark	Shipping Specifications or Assembling Reference	Remarks	Ordered		Calculated Weight for One Ship Piece
1	1		Beam								208B1	62'				
2	1		Beam								208B2	62'				
3	1		Beam								208B3	62'				
4																
5	1	CB	33	118		62	3					B1		62-6	2007	201/02
6	1	CB	33	118		62	3 3/8					B2		62-6	2007	
7	1	CB	33	118		62	3 3/4					B3		62-6	2007	
8	6	PL	22 1/2	5/8		2	7 3/8				pa ℄		29-2-7/8 Cuts 2	80 3/4 42-9 7/8	19107	201/07
9	6	PL	20 1/2	5/8		2	7 3/8				pb ℄		29-2-7/8 Cuts 2		19107	
10	3	PL	10	1		47	2				pc		Cov. PL	141 1/4 47-2 47-2	2001 2008 2008	201/03
11	6	Flt	8	9/16	1 3/8		8		BIS		pd			8-1 30-3/8	19111	201/27
12	8	Flt	3 1/2	1/2		1	11 1/4		TIE		Ka	2-B1, B2 & B3		3-1/4 30-3	19009	201/29
13	12	Flt	6 1/2	1/2		1	0				pf			6-1/4 20-0	19010	201/27
14	2	Flt	3 1/2	1/2		2	1 3/8		TIE		Kb	B2			19009	201/29
15	2	Flt	3 1/2	1/2		2	1 3/8		TIE		Kc	B1			19009	201/29
16																
17	6	Flt	6 1/4	1/2			8				pg		A36		IS	5

K-2828

Gen. Notes:-

Spec:- Michigan State Specs. 1967 For Road & Bridge Construction & Special Provisions.

Material:- ASTM-A441 MOD. [Corten "B"] U.N.

Open Holes:- 1 3/16" ø U.N.

Welding:- AWS & Special Provisions
use E70XX Low Hydrogen Elect. or F7X-XXXXX or F72-XXXXX Flux & Elect. Combinations

Paint:- No

Camber:- Camber is to be measured with the beam lying on its side. Allowable camber tolerance is ± 1/4. Heat is to be used if necessary to assure camber permanency.

Open Holes are for High Strength Structural Bolts U.N. "A"

SNIPS- Typ. 1 1/2 x 1 1/2

All steel shall be handled carefully and shall be kept free and clean of all foreign materials such as grease, oil, chalk marks, crayon marks, dirt, etc.

All shipping marks shall be made using a steel die.

The rounding of corners will not be required.

MICHIGAN DEPT. OF STATE HIGHWAYS
BRIDGE X01 OF 82122K
EVERGREEN ROAD OVER I-96
(JEFFRIES FREEWAY)
DETROIT, (WAYNE COUNTY) MICHIGAN

BEAM @SPAN # 2
LINES H-J-K

American Bridge Division of United States Steel

FAB. PLT. 03 | REV. CODE 54613

Sub-Assembly	No. of Pieces	Cost Centers Prod.	Cost Centers Non Prod.	P/S Marks Code
				5/6

Weight | Exception Rev. No. | Ship Division | Line Control 15

Revisions: F, E, D, C, B, A

For location of shipping pieces shown on T-15 sheet refer to erection plans: E6

Fabrication assigned to: Gary
Drawing made by: Gary #2
Made by: J Date: 1-69 Checked by: ALH Date: 2/6/69
In charge of: Augenstine # 5559

Order No. K2828 | Sheet No. 208

ADV. BILL 201

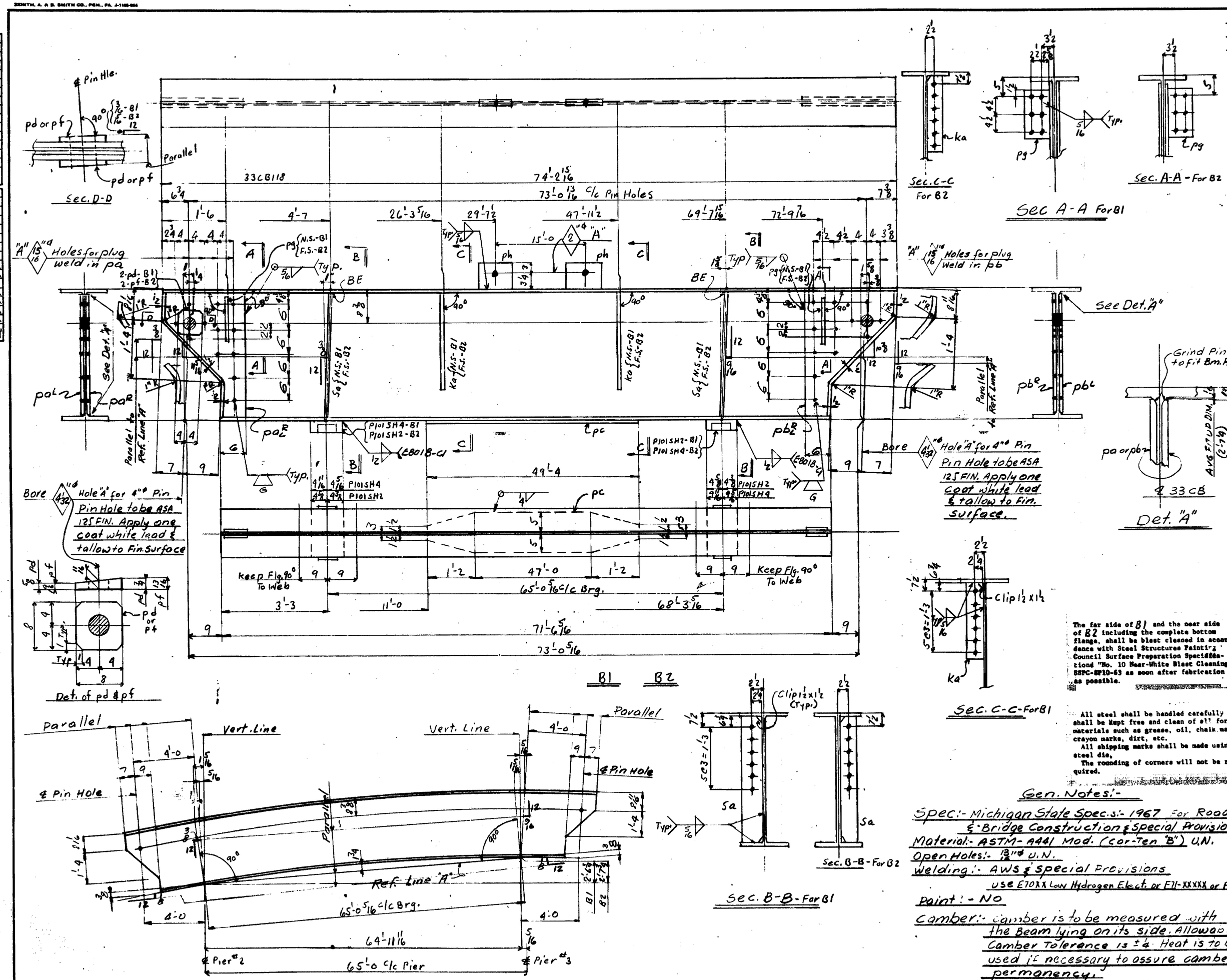

Line No.	Total No. of Pcs. in Bill	No. of Pcs. in Section	Mark	Dim.	Material Dimensions	Length Feet	Length Inches	Finish Code	Shipping or Assembling Mark	Shipping Specifications or Assembling Reference	Remarks	Ordered	Item	Calculated Weight Per Piece
3		1		BEAM					20981	74'				
4		1	CB	33	118	74	3 5/16				74-5½	20008		201-20
5	2	2	PL	20 3/4	5/8	2	7/8		pa R		26½x22-7/8	80412		
6	2	2	PL	23 3/8	3/8	2	7/8		pb R		26½x22-7/8	80412	79107	201-25
7	2	1	PL	10	3/4	49	4		pc		26½x22-7/8	80412	79107	201-25
8	2	1	M	Tapr Shape					P101SH4		Cov. PL	43-14	20006	201-21
9	2	1	M	Tapr Shape					P101SH2		Det. on Sh. P101			
10	4	2	FLT	8	9/16		8	BLS	pd			87-33-139	79111	201-29
11	4	2	FLT	6½	½	1	0		pg			43-2-30-0	79010	201-27
12	4	2	FLT	3½	½	2	5/16	FLE TIE	sa			33-2-14-4	79005	201-24
13														
14	4	2	FLT	3½	½	1	11¼	TIE	ka				79005	201-22
15	4	2	FLT	6¼	½		8		ph		A36		TS	
16														
17														
18														
19		1		BEAM					20982	74'				
20		1	CB	33	118	74	3 5/16				74-5½	20008		201-20
21		2	PL						pa R					201-25
22		2	PL						pb R					201-25
23		1	PL						pc					201-21
24		1	M						P101SH2					
25		1	M						P101SH4					
26		2	FLT	8	9/16		8	BLS	pf				79111	201-29
27		2	FLT						pg					201-27
28		2	FLT						sa					201-24
29														
30		2	FLT						ka					201-22
31		2	FLT						ph					
32														
33														
34														
35														
36														
37														
38														
39														
40														
41														
42														
43														
44														
45														
46														
47														
48														
49														
50														
51														
52														
53														
54														
55														
56														
57														
58														
59														
60														
61														
62														

The far side of B1 and the near side of B2 including the complete bottom flange, shall be blast cleaned in accordance with Steel Structures Painting Council Surface Preparation Specification "No. 10 Near-White Blast Cleaning", SSPC-SP10-63 as soon after fabrication as possible.

All steel shall be handled carefully and shall be kept free and clean of all foreign materials such as grease, oil, chalk marks, crayon marks, dirt, etc.

All shipping marks shall be made using a steel die.

The rounding of corners will not be required.

K-2828

Gen. Notes:-

Spec:- Michigan State Spec.s:- 1967 for Road & Bridge Construction & Special Provisions.

Material:- ASTM-A441 Mod. (Cor-Ten "B") U.N.

Open Holes:- 13/16" U.N.

Welding:- AWS & Special Provisions

use E70XX Low Hydrogen Elect. or F71-XXXXX or F72-XXXXX Flux & Elect. Combinations

Paint:- No

Camber:- Camber is to be measured with the Beam lying on its side. Allowable Camber Tolerance is ± ¼. Heat is to be used if necessary to assure camber permanency.

Open Holes are for High Strength Structural Bolts U.N. "A".

B.E. Denotes Bearing End

"UNLESS NOTED"

PAR. SLT.	NO. CODE	5464
NO. CODED	COST CENTERS: PROD.	NON PROD.
		PAY BASIS CODE
		5/6
WEIGHT REV. NO.	EXCEPTION SHIP DIVISION	LINE CONTROL 24

F	
E	
D	
C	
B	
A	

REVISIONS

FOR LOCATION OF SHIPPING PIECES SHOWN ON THIS SHEET REFER TO ERECTION PLANS: E6

ADV. BILL

MICHIGAN DEPT. OF STATE HIGHWAYS
BRIDGE X01 OF 82122K
EVERGREEN ROAD OVER I-96
(JEFFRIES FREEWAY)
DETROIT, (WAYNE COUNTY) MICHIGAN

Beams @ Span #3 Line A&L

American Bridge Division of United States Steel

FABRICATION ASSIGNED TO Gary

DRAWING MADE BY Gary #2

MADE BY WP DATE 1-15-69 CHECKED BY ALH DATE 2/2/69

IN CHARGE OF Augenstine #5559.

ORDER NO. K2828

SHEET NO. 209

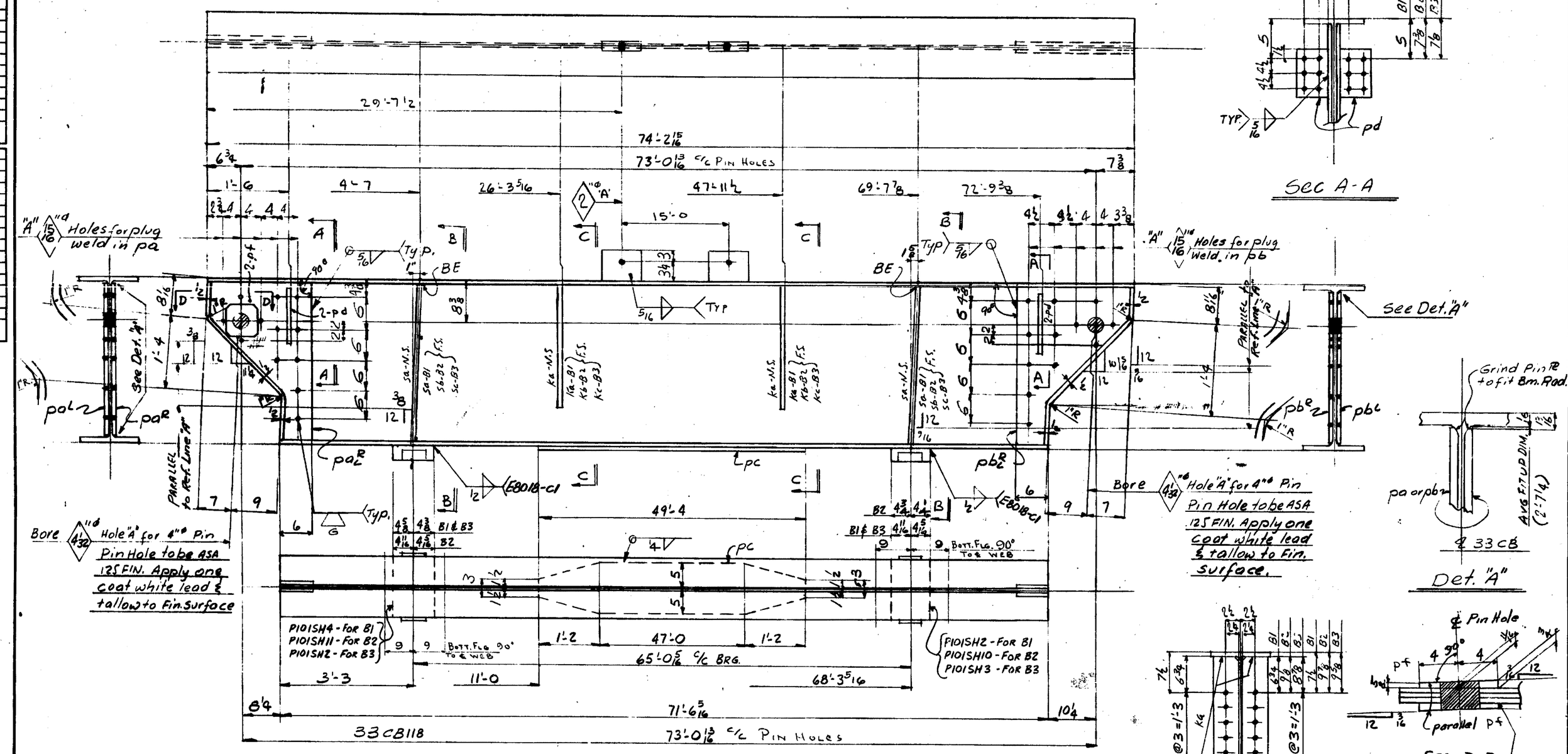

LINE NO.	TOTAL NO. OF PCS. OR ASSEMBLY	MATERIAL: NO. OF PCS. OR SHEETS	MATERIAL: ADDITIONAL DESIG.	MATERIAL: DIMENSIONS	MATERIAL: LENGTH FEET	MATERIAL: LENGTH INCHES	FINISH AND TRIM: DESIG.	FINISH AND TRIM: INCHES	SHIPPING OR ASSEMBLING MARK	SHIPPING SPECIFICATIONS OR ASSEMBLING REFERENCE	REMARKS	ORDERED:	ORDERED: ITEM	CALCULATED WEIGHT FOR ONE SHIP PIECE
1														
2		1		BEAM					210B1		74'			
3		1		BEAM					210B2		74'			
4		1		BEAM					210B3		74'			
5		3	CB	33 118	74	3 3/16						7th-5th 10th-7th 12th-9th	2008	201/20
6		6	PL	9 1/4 3/8	2	7 1/4			pa L R		9 1/4 x 2 7/16 Cut 2 - R Cut 2 - R		9107	201/25
7		6	PL	23 3/8 5/8	2	7 1/4			pb L R		10 x 2 5/16 Cut 2 - R		9107	
8		3	PL	10 3/4	49	4			pc		Cut R	31 1/2 x 48 1/4	2007	201/21
9		8	FLT	3 1/2 1/2	2	7 5/16	FIG TIE		sa	6-B1 2-B2, B3		33 1/2 x 30-5	9908	
10		2	FLT	3 1/2 1/2	2	7 5/16	FIG TIE		sb	B2			9908	201/19
11		2	FLT	3 1/2 1/2	2	7 5/16	FIG TIE		sc	B3			9908	
12		8	FLT	3 1/2 1/2	1	11 1/8	TIE		ka	6-B1 2-B2, B3		33 1/2 x 11-4	9905	201/22
13		2	FLT	3 1/2 1/2	2	1 5/8	TIE		kb	B2		33 1/2 x 11-4	9906	201/23
14		2	FLT	3 1/2 1/2	2	1 1/2	TIE		kc	B3			9906	
15		12	FLT	6 1/2 1/2	1	0			pd			6 1/2 x 20-0	9908	201/27
16		6	FLT	8 5/8 3/4	8		B1 S		pf			8 x 1 30/33	9911	201/29
17		6	FLT	1/4 1/2	8				pg		A36		IS	5
18														
19		2	M	Top Shoe					P101SH2	B1-B3				
20		1	M	Top Shoe					P101SH3	B3	(DET. on SH. P101)			
21		1	M	Top Shoe					P101SH4	B1				
22		1	M	Top Shoe					P101SH10	B2				
23		1	M	Top Shoe					P101SH11	B2				
24														
25														
26														
27														
28														
29														
30														
31														
32														
33														
34														
35														
36														
37														
38														
39														
40														
41														
42														
43														
44														
45														
46														
47														
48														
49														
50														
51														
52														
53														
54														
55														
56														
57														
58														
59														
60														
61														
62														

K-2828

GEN. NOTES

All steel shall be handled carefully and shall be kept free and clean of all foreign materials such as grease, oil, chalk marks, crayon marks, dirt, etc.

All shipping marks shall be made using a steel die.

The rounding of corners will not be required.

Spec.:- Michigan State Spec.s:- 1967 for Road & Bridge Construction & Special Provisions.

Material:- ASTM-A441 Mod. (Cor-Ten "B") U.N.

Open Holes:- 13/16" U.N.

Welding:- AWS & Special Provisions

use E70XX Low Hydrogen Elect. or F71-XXXXX or F72-XXXXX Flux & Elect. Combinations

Paint:- NO

Camber:- Camber is to be measured with the Beam lying on its side. Allowable Camber Tolerance is ±¼ Heat is to be used if necessary to assure camber permanency.

Open Holes are for High Strength Structural Bolts U.N. "A"

B.E. DENOTES BEARING END

All snips to be 1½ x 1½

"UNLESS NOTED."

FAB. PLT.	03	SEQ. CODE	5H6	15
BSD	NO. CKRS.	COST CENTERS: PROD.	NON PROD.	PAY BASIS CODE
WEIGHT REV. NO.	EXCEPTION SHIP DIVISION		LINE CONTROL	5/6

REVISIONS	
F	
E	
D	
C	
B	
A	

FOR LOCATION OF SHIPPING PIECES SHOWN ON THIS SHEET REFER TO ERECTION PLANS: E6

ADV. BILL 201

MICHIGAN DEPT. OF STATE HIGHWAYS
BRIDGE X01 OF 82122K
EVERGREEN ROAD OVER I-96
(JEFFRIES FREEWAY)
DETROIT, (WAYNE COUNTY) MICHIGAN

Beam @ Span # 3
LINES B, C, & D

American Bridge Division of United States Steel

FABRICATION ASSIGNED TO: Gary

DRAWING MADE BY: Gary # 2

MADE BY: WAB DATE: CHECKED BY: ALN DATE: 2/26/69

IN CHARGE OF: Augenstine #5559

ORDER NO.: K2828

SHEET NO.: 210

ZENITH, A. & B. SMITH CO., PGH., PA. J-1188-954

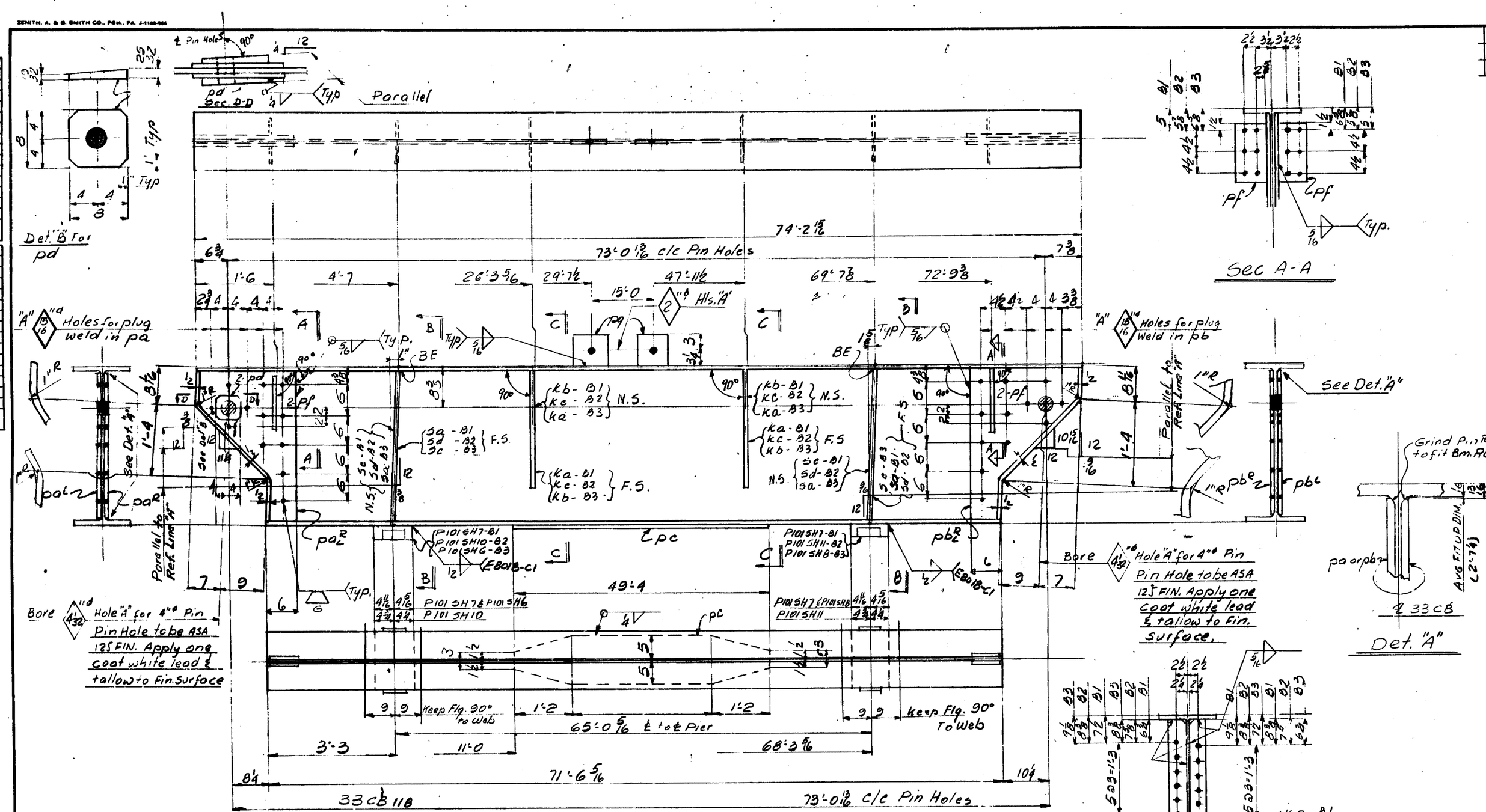

Cutting and Camber Diagram.
For B1, B2 & B3

All steel shall be handled carefully and shall be kept free and clean of all foreign materials such as grease, oil, chalk marks, crayon marks, dirt, etc.
All shipping marks shall be made using a steel die.
The rounding of corners will not be required.

Gen. Notes:-

Spec:- Michigan State Specs:- 1967 for Road & Bridge Construction & Special Provisions.
Material:- ASTM-A441 Mod. (Cor-Ten "B") U.N
Open Holes:- 13/16" U.N.
Welding:- AWS & special Provisions
use E70XX Low Hydrogen Elect. or F71-XXXXX or F72-XXXXX Flux & Elect. Combinations
Paint:- NO
Camber:- Camber is to be measured with the Beam lying on its side. Allowable Camber Tolerance is ±¼. Heat is to be used if necessary to assure camber permanency.
Open Holes are for High Strength Structural Bolts U.N. "A"
All splices on stiffs to be 1½"x1½"

B.E. Denotes Bearing End

L I S T I N G S NO.	TOTAL NO. OF PCS. ON SHIPMENT	NO. OF PCS. ON SKETCH	ASSY. DESC.	MATERIAL DIMENSIONS	LENGTH FEET	LENGTH INCH	FINISH AND TRIM DESC.	FINISH AND TRIM INCH	SHIPPING OR ASSEMBLING MARK	SHIPPING SPECIFICATIONS OR ASSEMBLING REFERENCE	REMARKS	ORDERED	ITEM	CALCULATED WEIGHT FOR USE SHIP PIECE
1		1	BEAM B1						211 B1	74'				
2	1	CB	33 118		74	3 3/16						74-5½	2008	201-20
3	2	PL	20½ ⅜		2	7½			pa R		2½ x 2-¼	50½ x 2	PP1007	201-25
4	2	PL	23½ ⅜		2	7½			pb R		2½ x 2-¼	52-9¾ x 2	PP1007	201-25
5	1	PL	10		49	4			pc		Cor. R	52 x 49-4	2006	201-21
6	2	FLT	8	⅜ x 5/32	8	8 15			pd			8 x 8-4	PP1011	201-29
7	12	4	FLT	6½ ½	1	0			pf			30 x 33	PP1010	201-27
8	4	2	FLT	3½ ½	2	7 3/16	TIE TIE		sa			30-0 3½ x 30-5	PP1005	301-15
9														
10	4	2	FLT	3½ ½	2	7 3/16	TIE TIE		sc			3½ x 18-4	PP1006	201-23
11		2	H	TOP SHOE					P101SH7		2½ to 14 P101	—		
12	4	2	FLT	3½ ½	2	1	TIE		ka				PP1006	201-23
13	4	2	FLT	3½ ½	1	11 11/16	TIE		kb				PP1006	201-23
14	6	2	FLT	6½ ½		8			pg		A36		15	
15														
16														
17														
18														
19		1	BEAM						211 B2	74'				
20	1	CB	33 118		74	3 3/16						74-5½	2008	201-20
21	2	PL							pa R					201-25
22	2	PL							pb R					201-25
23	1	PL							pc		Cor. R			201-21
24	2								pd					201-29
25	4	FLT							pf					201-27
26	4	FLT	3½ ½		2	7 3/16	TIE		sd				PP1006	301-15
27	1	M	TOP SHOE						P101SH10		Det. on SH. P101	—		
28	1	M	TOP SHOE						P101SH11			—		
29	2	FLT							pg					301-15
30	4	FLT	3½ ½		2	0 5/16	TIE		kc				PP1006	201-23
31														
32														
33														
34														
35														
36	1		BEAM						211 B3		74'			
37	1	CB	33 118		74	3 3/16						74-5½	2008	201-20
38	2	PL							pa R					201-25
39	2	PL							pb R					201-25
40	1	PL							pc		Cor. R.			201-21
41	2	FLT							pd					201-29
42	4	FLT							pf					201-27
43	2	FLT							sc					301-15
44	1	M	TOP SHOE						P101SH6		Det. on SH. P101	—		
45	1	M	TOP SHOE						P101SH8			—		
46	2	FLT							sa					301-15
47	2	FLT							kb					201-23
48	2	FLT							ka					201-23
49	2	FLT							pg					
50														
51														
52														
53														
54														
55														
56														
57														
58														
59														
60														
61														
62														

K-2828

MICHIGAN DEPT. OF STATE HIGHWAYS
BRIDGE X01 OF 82122K
EVERGREEN ROAD OVER I-96
(JEFFRIES FREEWAY)
DETROIT, (WAYNE COUNTY) MICHIGAN

"UNLESS NOTED"

Beam @ span #3

American Bridge Division of USS United States Steel

FAB. PLT. 3 | NO. CODE 5 4 6 1 6

BASIS	NO. CHARGE	COST CENTERS PROD.	NON PROD.	PAY BASIS CODE
				56
WEIGHT DEV. NO.	EXCEPTION SHOP DIVISION		LINE CONTROL	39

REVISIONS

FOR LOCATION OF SHIPPING PIECES SHOWN ON THIS SHEET REFER TO ERECTION PL. NO. E6

FABRICATION ASSIGNED TO: Gary
DRAWING MADE BY: Gary #2
MADE BY: T.S. DATE 1-16-62 CHECKED BY: AJH DATE 2/2/62
IN CHARGE: Augenstine 5559

ORDER NO. K2828 | SHEET NO. 211

ADV. BILL

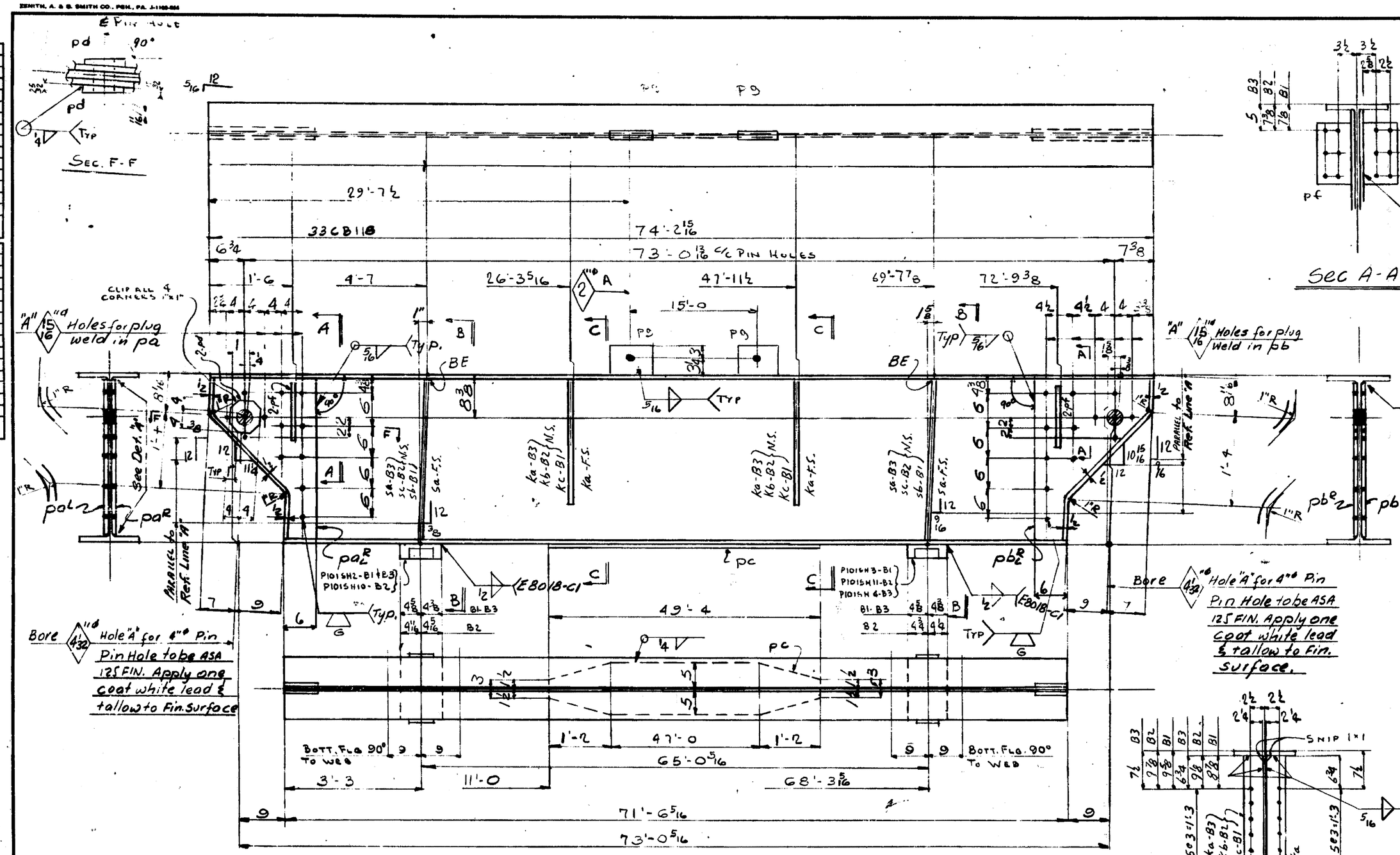

LINE NO.	TOTAL NO. OF PCS. ON SHIPMENT	MATERIAL: NO. OF PCS. ON SHIPMENT	ASSEM. MARK	DIMENSIONS	LENGTH FEET	LENGTH INCH	FINISH AND TYPE	SHIPPING OR ASSEMBLING MARK	SHIPPING SPECIFICATIONS OR ASSEMBLING REFERENCE	REMARKS	ORDERED		CALCULATED WEIGHT FOR ONE SHIP PIECE
1													
2	1		BEAM					P19B1	74'				
3	1		BEAM					P19B2	74'				
4	1		BEAM					P19B3	74'				
5													
6													
7	3	CB	33 11/16		74	3/8					74-0	2008	20/20
8	6	PL	20 3/4	3/8	7	7/8		pa℞		9-0 x 2-7/8	80-0 x 8-3/4	PM07	20/25
9	6	PL	23 3/4	3/8	7	7/8		pb℞		9-0 x 2-7/8	42-0 x 8-3/4	PM07	
10	3	PL	10	3/4	49	4		pc		Cov. ℞	98 x 10-4	2006	20/21
11	6	FLT	8	3/32		8	RIS	pd			8 x 30/33	PM11	20/29
12	12	FLT	6 1/2	1/2	1	0		pf			6 x 6 x 30-0	PM10	20/27
13	8	FLT	3 1/2	1/2	1	11 1/8	TIE	Ka	3-B1, B2 4-B3		55 x 10-4	PM06	20/22
14	2	FLT	3 1/2	1/2	2	1 1/8	TIE	Kb	B2		55 x 18-4	PM06	20/23
15	2	FLT	3 1/2	1/2	2	1 1/8	TIE	Kc	B1			PM06	
16	8	FLT	3 1/2	1/2	2	7 3/4	FIC TIE	sa	4-B3, B2 4-B1		55 x 30-5	PM06	20/24
17	2	FLT	3 1/2	1/2	2	7 3/4	FIC TIE	sb	B1			PM06	
18	2	FLT	3 1/2	1/2	2	7 3/4	FIC TIE	sc	B2			PM06	
19	6	FLT	6 1/2	1/2		8		P8		A36		IS	S
20	2	M	Top Shoe					P10ISH2	B1-B3				
21	1	M	Top Shoe					P10ISH3	B1	DET. ON Sh. P101			
22	1	M	Top Shoe					P10ISH4	B3				
23	1	M	Top Shoe					P10ISH10	B2				
24	1	M	Top Shoe					P10ISH11	B2				
25													
26													
27													
28													
29													
30													
31													
32													
33													
34													
35													
36													
37													
38													
39													
40													
41													
42													
43													
44													
45													
46													
47													
48													
49													
50													
51													
52													
53													
54													
55													
56													
57													
58													
59													
60													
61													
62													

K-2828

Gen Notes:

All steel shall be handled carefully and shall be kept free and clean of all foreign materials such as grease, oil, chalk marks, crayon marks, dirt, etc.

All shipping marks shall be made using a steel die.

The rounding of corners will not be required.

Spec:- Michigan State Specs:- 1967 for Road & Bridge Construction & Special Provisions.

Material:- ASTM-A441 Mod. (Cor-Ten "B") U.N.

Open Holes:- 13/16" U.N.

Welding:- AWS & Special Provisions

use E70XX Low Hydrogen Electrode or F71-XXXXX or F72-XXXXX Flux & Electrode Combinations

Paint:- No

Camber:- Camber is to be measured with the Beam lying on its side. Allowable Camber Tolerance is ±¼ Heat is to be used if necessary to assure camber permanency.

Open Holes are for High Strength Structural Bolts U.N. "A"

B.P. Denotes Bearing Pile

Cambers: "Unless Noted"

MICHIGAN DEPT. OF STATE HIGHWAYS
BRIDGE X01 OF 82122K
EVERGREEN ROAD OVER I-96
(JEFFRIES FREEWAY)
DETROIT, (WAYNE COUNTY) MICHIGAN

Beam @ Span #3
Lines H-J-K

American Bridge Division of United States Steel

Fabrication assigned to: Gary

Drawing made by: Gary #2

Made by: ____ Date: ____ Checked by: ALH Date: 2/8/68

In charge of: Augenstine #5559

Far. Plt. 03 Seq. Code 54 1 17

Cost Centers: Prod. / Non Prod. / Pay Basis Code

Weight Rev. No. / Exception Shop Division / Line Control

Revisions: A, B, C, D, E, F

For location of shipping pieces shown on this sheet refer to erection plans: E6

Order No. K2828

Sheet No. 2/2

Adv. Bill

D-83XC REV. 9-67

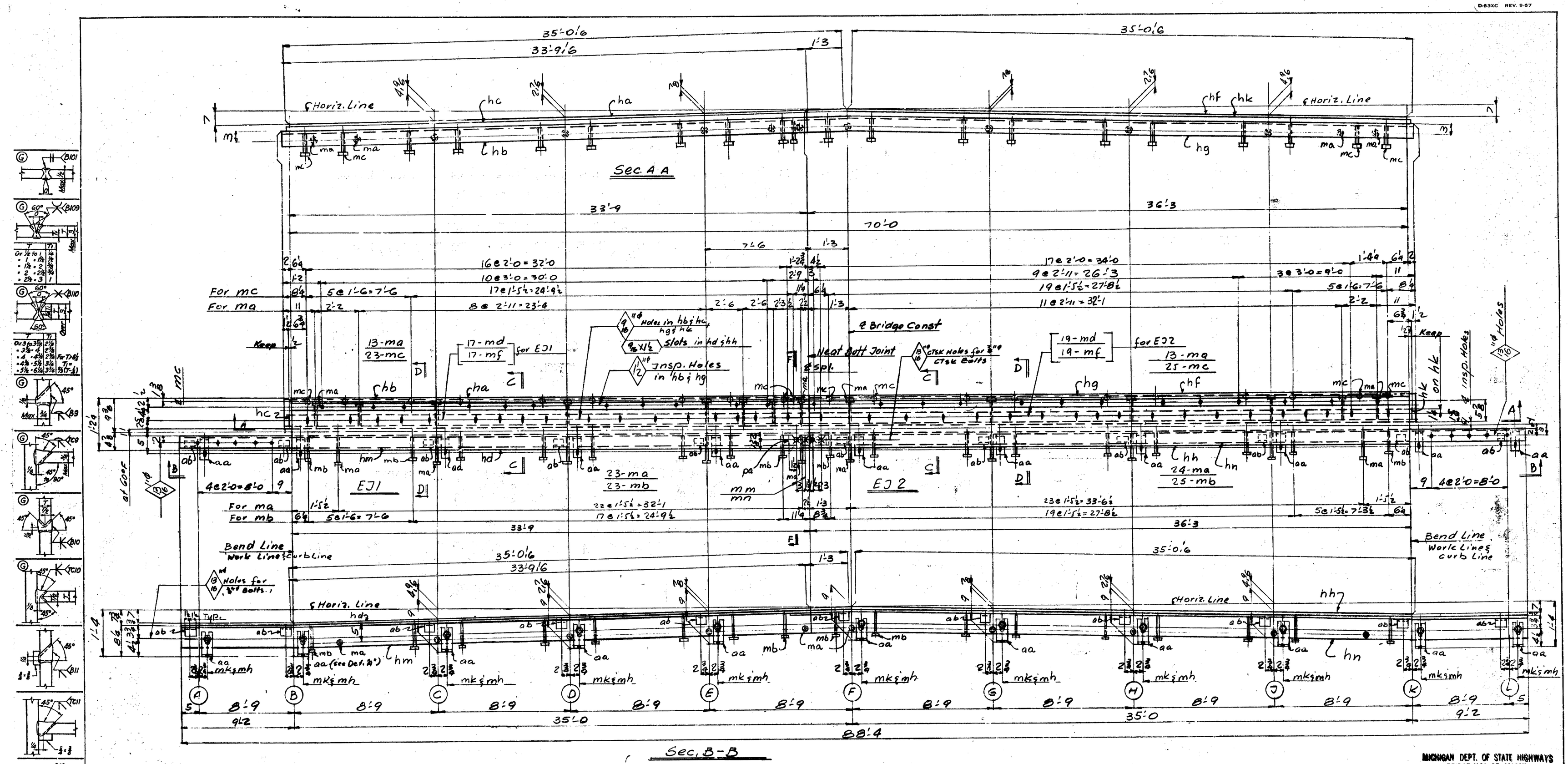

MICHIGAN DEPT. OF STATE HIGHWAYS
BRIDGE X01 OF 82122K
EVERGREEN ROAD OVER I-96
(JEFFRIES FREEWAY)
DETROIT, (WAYNE COUNTY) MICHIGAN

FAB.PLT.03
SEQ. CODE 54649

USS American Bridge
Division of United States Steel Corporation

FABRICATION ASSIGNED TO Gary
DRAWING MADE BY Gary #2
MADE BY M.Z. DATE 12/20/68 CHECKED BY ALH DATE 1/20/69
IN CHARGE OF Augerstine #5559

BRIDGE NO. K2828
SHEET NO. 301AB

Note to Drawing Room: Do not specify welding process on drawing unless required by job specification.

ZENITH, A. & B. SMITH CO., PGH., PA. J-1109-9-56

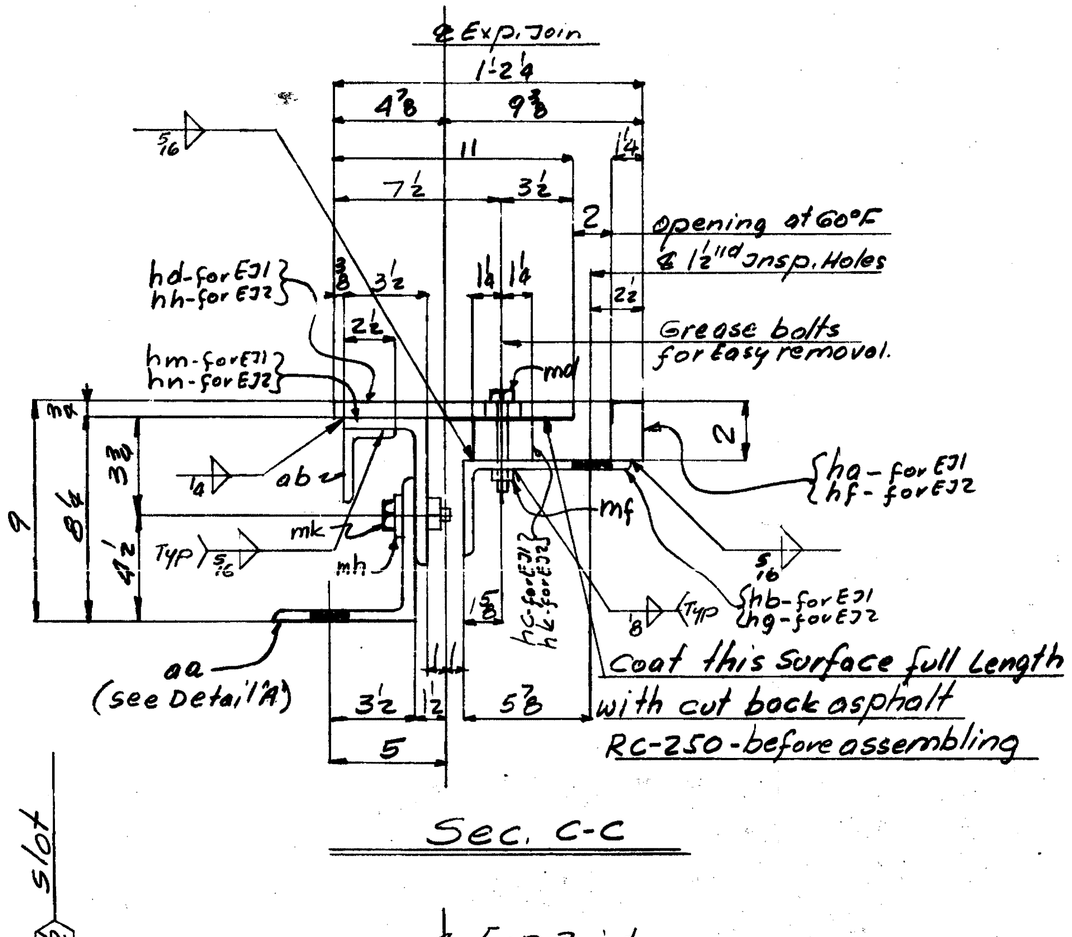

Sec. C-C

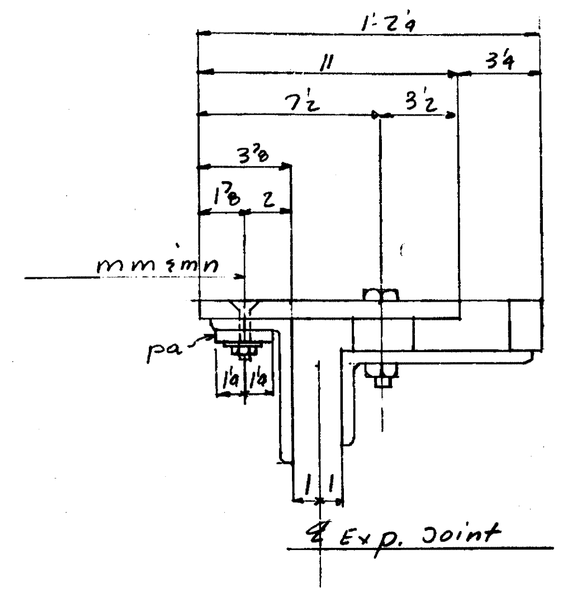

Sec. F - F

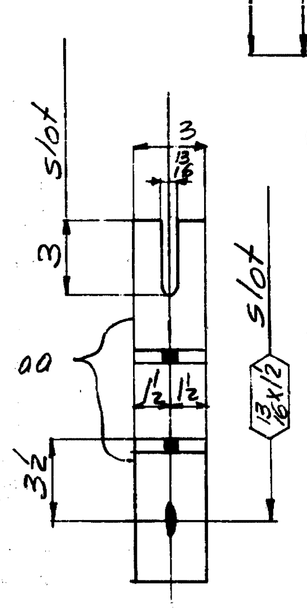

Det. "A"

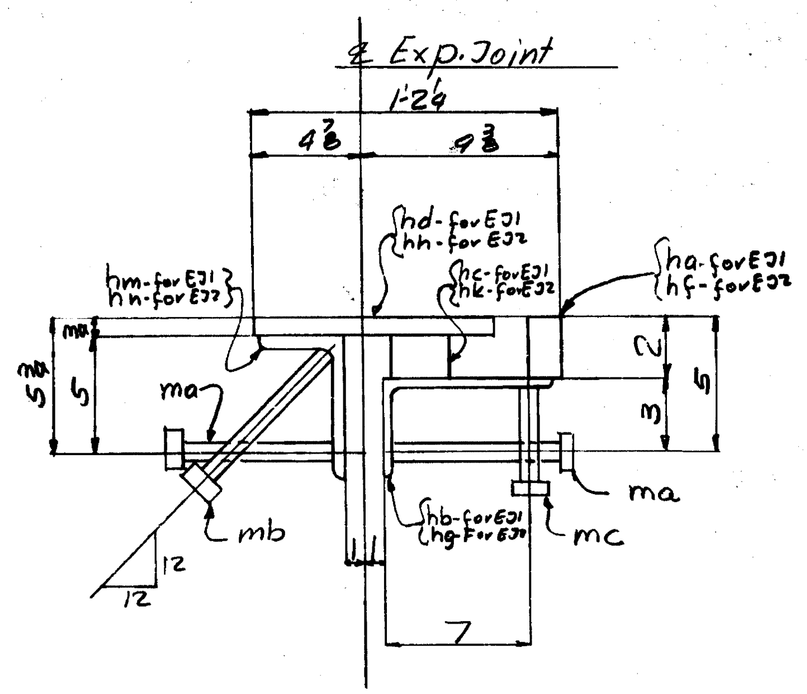

Sec D-D

Line No.	Total No. of Pcs. on Order	No. of Pcs. on Sketch	Abbrv. Desc.	Dimensions	Length Feet	Length Inch	Finish and Paint Desc.	Finish and Paint Inch	Shipping or Assembling Mark	Shipping Specifications or Assembling Reference	Remarks	Ordered	Item	Calculated Weight for One Ship Piece
1														
2		1	Expansion Joint						301EJ1					
3														
4		1	FLT	2 1/4		33	9 1/16	BEND	ha			2X1/4 36-10	PROB	302/15
5		1	L	8 4 7/16		33	11 1/16	BEND	hb			3½-3 3½X 3½-3	PROB	302/7
6		1	FLT	2½ 1¼		33	9 9/16	BEND	hc			2X1/4 32-14	PROB	302/13
7		1	PL	11 3/4		33	9 9/16	BEND	hd			33 1/8X 33-10	PROB	302/9
8		1	L	6 3½ ½		42	11 1/16	BEND	hm			4½-4½	PROB	302/3
9	11	5	L	6 6 ½		3			aa			40-0	PROB	111/24
10	11	5	L	3 2½ 5/8		3			ab		PIN 3X3X3/8	30-0	SM	111/23
11	73	36	M	3/4" NBHM Sq. Hd.		7			ma		Type H8	3-57665		M102/14
12	48	23	M	3/4" NBHM Sq. Hd.		8			mb		Type H8	3-57665		M102/17
13	48	23	M	3/4" NBHM Sq. Hd.		4			mc		Type H8	3-57665		M102/11
14	2/6	17	M	1/2" Bolts		3½			md		A307 Sq. Hd.	3-60005		M102/7
15	3/6	17	M	Sq. Nut		100			mf		A307			M102/7
16	11	5	PB	3/4 HHN		2¼			mk		A307	S	S	M102/3
17	11	5	WASH	2¼ 1/4	13/16				mh		A36	S	S	M102/5
18		1	FLT	2½ 1/2		10			pa			8X 30-0	PROB	111/22
19		2	M	3/4" CTSK HSB							Equal to Corten "B" Corr. Resist.	3-57666		
20				Hex Nuts		3			mm					M102/2
21		2	M	1 3/8" H.B. Hex Nut		9 3/8			mn			S	S	M102/10
22														
23														
24														
25														
26		1	Expansion Joint						301EJ2					
27														
28		1	FLT	2 1/4		36	3/16	BEND	hf				PROB	302/14
29		1	L	8 4 7/16		36	11/16	BEND	hg			3½-3	PROB	302/6
30		1	PL	11 3/4		36	3/16	BEND	hh			3½X 3½X 36-9¾	PROB	302/8
31		1	FLT	2½ 1/4		36	3/16	BEND	hk				PROB	302/12
32		1	L	6 3½ ½		45	5/16	BEND	hn				PROB	302/2
33		6	L						aa					
34		6	L						ab					
35		37	M						ma					
36		25	M						mb					
37		25	M						mc					
38		19	M						md					
39		19	M						mf					
40		6	PB						mk					
41		6	WASH						mh.					
42														
43														
44														
45														
46														
47		20		Support Bars					301 M1					
48		20	FLT	2 3/8		10					Pin-No Sketch		IS	11/25
49														
50														
51														
52														
53														
54														
55														
56														
57														
58														
59														
60														
61														
62														

K-2828

Gen. Notes:-

Spec:- Mich. State Hwy. Specs. 1967 for Road & Bridge Constr. & special Provisions

Material:- ASTM-A441 modified Cor-ten "B" U.N

Rivets:- None.

Open Holes:- As Noted

Welding:- Yes AWS Spec for welded Hwy & Railway BRIDGES "USE E70XX LOW HYDROGEN ELECTRODES OR F7X-XXXXX OR F72-XXXXX FLUX AND ELECTRODE COMBINATION 3"

Paint:- None

Shop contact surfaces:- NO

All steel shall be handled carefully and shall be kept free and clean of all foreign materials such as grease, oil, chalk marks, welding marks, dirt, etc.

All shipping marks shall be made using a stencil die.

The rounding of corners will not be required.

Fab. Plt. 03	Seq. Code 5469	
Bid No. / Order No.	Cost Centers: Prod. / Non Prod.	Fat Basis Code
		5le
Weight Rev. No.	Exception Ship Division	Lot Control 35

Revisions	
F	
E	
D	
C	
B	
A	

For location of shipping pieces shown on this sheet refer to erection plans: E6 & E7

ADV. BILL

Order No. K 2828

Sheet No. 301B

MICHIGAN DEPT. OF STATE HIGHWAYS
BRIDGE X01 OF 82122K
EVERGREEN ROAD OVER I-96
(JEFFRIES FREEWAY)
DETROIT, (WAYNE COUNTY) MICHIGAN

Expansion Joint

American Bridge Division of United States Steel

Fabrication assigned to: Gary

Drawing made by: Gary #2

Made by: M.Z. Date 2/26/68 Checked by: ALH Date 1/20/69

In charge of: Augenstine #5559

ZENITH A. & B SMITH PGH., PA. M-6150-566

D-81XC REV. 566

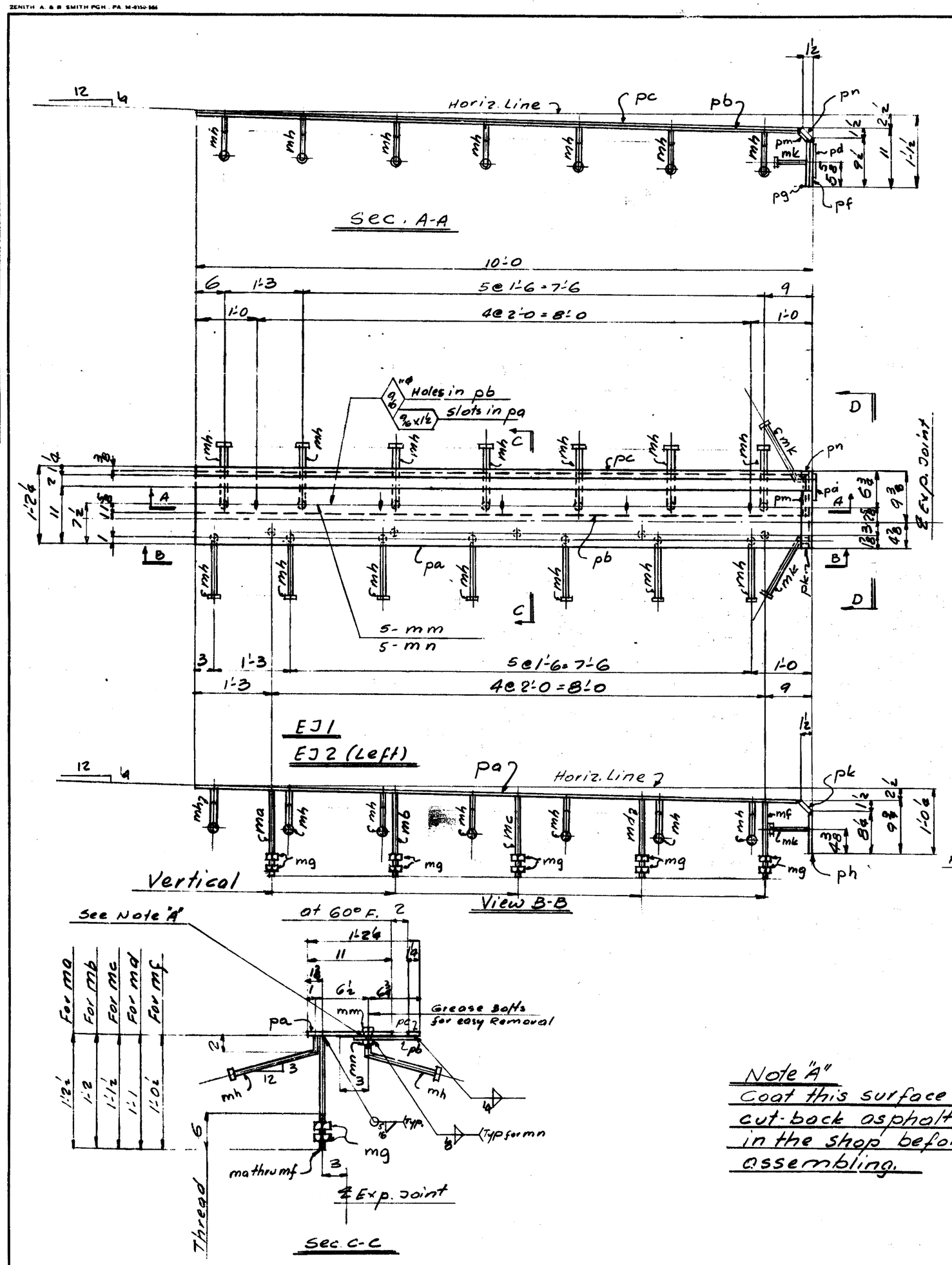

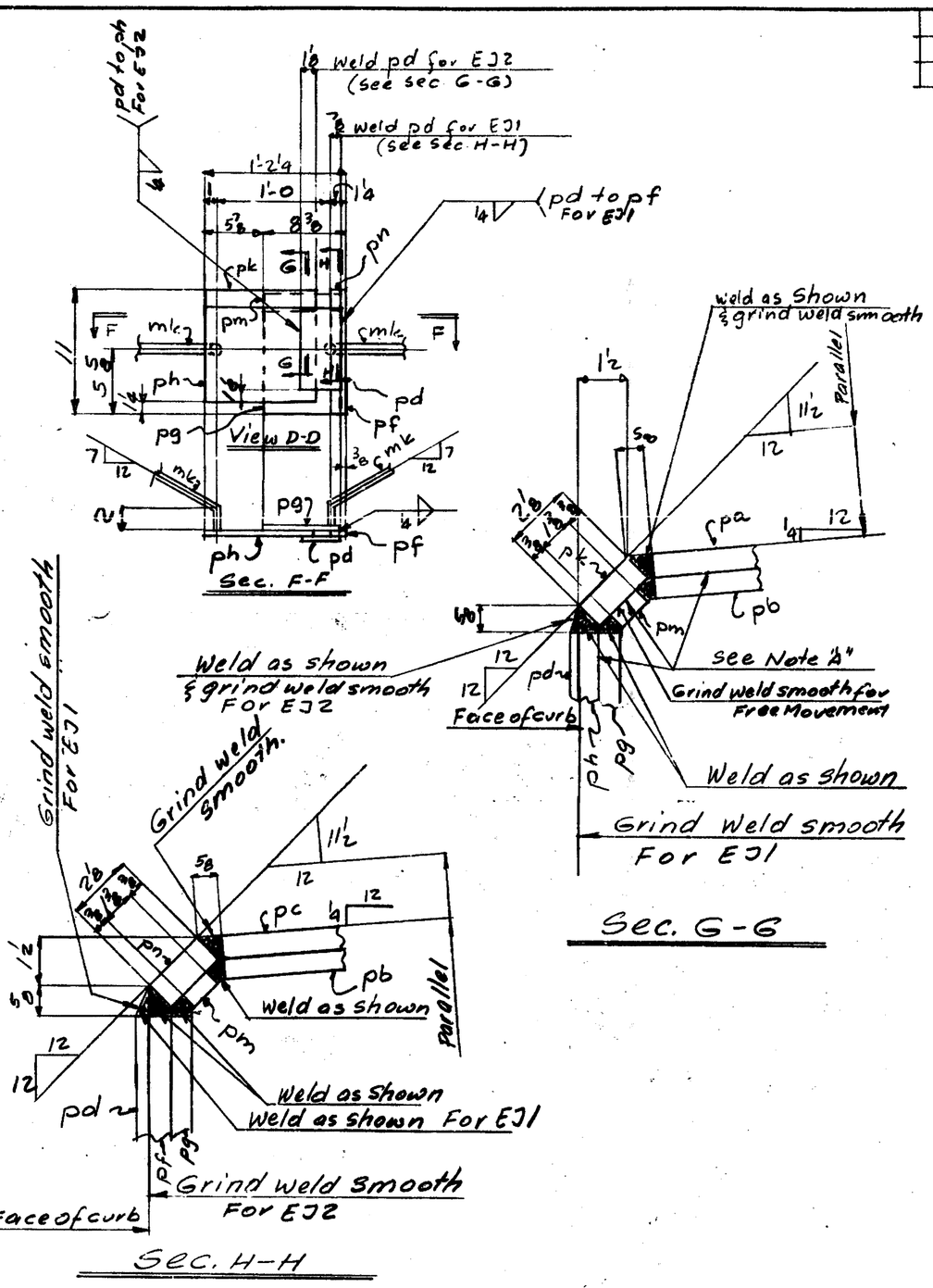

Note "A"
Coat this surface with cut-back asphalt RC-250 full length in the shop before assembling.

Gen. Notes:-
Spec: 1957 Mich. State Hwy Spec.s for Road & Bridge Constr. & Spec. Provs.
Material:- ASTM-A441-Modified Corten "B" U.N.
Rivets:- None
Open Holes:- As Noted
Welding:- Yes, AWS, spec. for welded Hwy & Railway Bridges
Use E8018-C1 Electrode
Paint:- None
Shop Contact Surface:- No

All steel shall be handled carefully and shall be kept free and clean of all foreign materials such as grease, oil, chalk, marks, crayon marks, dirt, etc.
All shipping marks shall be made using a steel die.
The rounding of corners will not be required.

LINE NO.	TOTAL NO. OF PCS. ON ORDER	MATERIAL: NO. OF PCS. OR SHEETS	ABBRV. DESC.	DIMENSIONS	LENGTH FEET	LENGTH INCH	FINISH AND TRIM DESC.	FINISH AND TRIM INCH	SHIPPING OR ASSEMBLING MARK	SHIPPING SPECIFICATIONS OR ASSEMBLING REFERENCE	REMARKS	ORDERED	ITEM	CALCULATED WEIGHT FOR ONE SHIP PIECE
1														
2		1		Expansion Joint					302EJ1					
3		1		Expansion Joint					302EJ2					
4														
5		2	PL	11 1/2	9	7/8			pa			HBX 30-0	M127 302/28	
6		2	PLT	8 1/2	9	9 3/8			pb			"	M127 302/29	
7		2	FLT	1 1/4 1/2	9	9 3/8			pc				M127 302/22	
8		2	FLT	4 1/4		6 1/2			pd			HBX 8-0	M127 302/16	
9		2	FLT	1 1/4 1/2		8 7/8			pf				M127 302/20	
10		2	FLT	8 1/2		8 7/8			pg				M127 302/29	
11		2	PL	11 1/2		7 7/8			ph				M127 302/26	
12		2	FLT	2 5/8 1/16		11			pk		FIN 3/4" tl		TS	
13		2	FLT	1 3/8 1/2		8			pm				M127 302/27	
14		2	FLT	2 5/8 1/16		1 1/4			pn		FIN 3/4" tl		TS	
15		2	RD	3/4	1	2 1/2			ma		A36	MACH SHOP		
16		2	RD	3/4	1	2			mb		A36			
17		2	RD	3/4	1	1 1/2			mc		A36			
18		2	RD	3/4	1	1			md		A36			
19		2	RD	3/4	1	0 1/2			mf		A36			
20		20	M	Std Sq. Nut 3/4" Top					mg		A307			
21		28	M	3/16" Weld Stud			BEND		mh		Std. 3-5/16 x 5		M102/12	
22				Type H &		x 11								
23		4	M	3/16" Weld Stud			BEND		mk		Std 3-5/16 x 5		M102/8	
24				Type H &		x 1-2								
25		10	M	1/4" Bolts		2			mm		A307 Sq. Hd. 3-5/16 x 2		M102/8	
26		10	M	Std Sq. Nut 1/4" Top					mn		A307		M102/8	
27														
28														
29														
30														
31														
32														
33														
34														
35														
36														
37														
38														
39														
40														
41														
42														
43														
44														
45														
46														
47														
48														
49														
50														
51														
52														
53														
54														
55														
56														
57														
58														
59														
60														
61														
62														

K-2828

MICHIGAN DEPT. OF STATE HIGHWAYS
BRIDGE XOI OF 82122K
EVERGREEN ROAD OVER I-96
(JEFFRIES FREEWAY)
DETROIT, (WAYNE COUNTY) MICHIGAN

Expansion Joint

American Bridge
Division of United States Steel Corporation

FAB. PLT. C3 | SEQ CODE 5H4650
BSD NO. CRQR | COST CENTERS PROD. NON PROD. PAY BASIS CODE 56
WEIGHT REV. NO. | EXCEPTION SHIP DIVISION | LIVE CONTROL 22
REVISIONS: F, E, D, C, B, A

FOR LOCATION OF SHIPPING PIECES SHOWN ON THIS SHEET REFER TO ERECTION PLANS
E6

ADV. BILL

FABRICATION ASSIGNED TO Gary
DRAWING MADE BY Gary #2
MADE BY M.Z. DATE 1/6/69 CHECKED BY AW DATE 1/10/69
IN CHARGE OF Augenstine #5555

ORDER NO. K2828
SHEET NO. 302