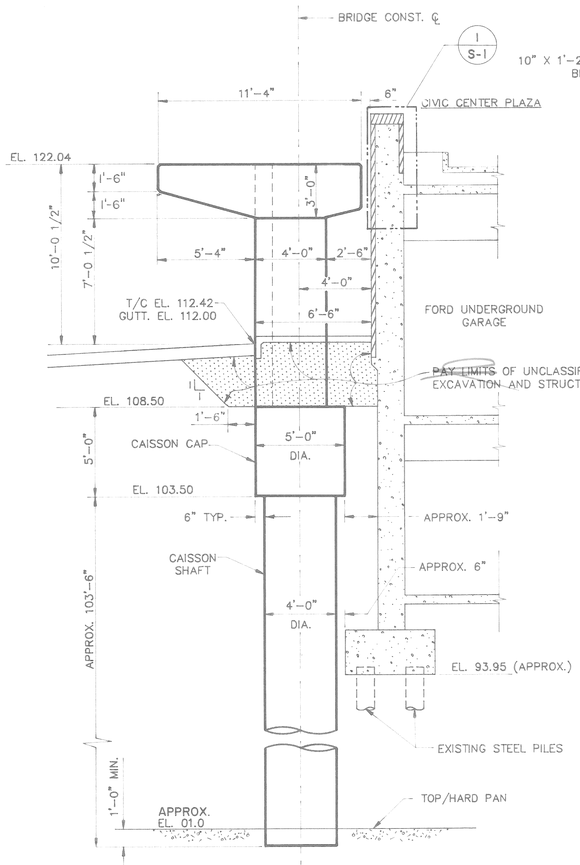

ELEVATION

1/4" = 1'-0"

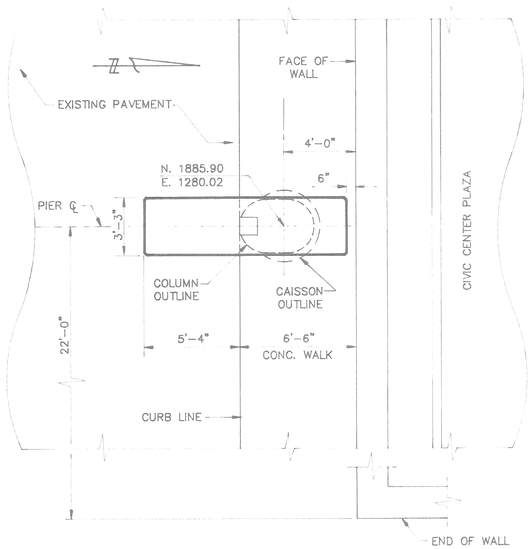

PLAN

1/4" = 1'-0"

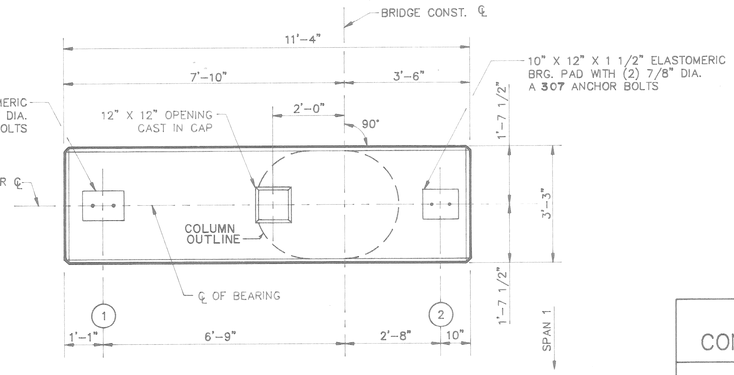

PLAN OF CAP

1/2" = 1'-0"

SUBSTRUCTURE CONCRETE QUANTITIES		
PIER 1		
POUR	LOCATION	AMOUNT (CU. YD.)
A	CAISSON	48.2
B	CAP	3.8
C	COLUMN	3.6
D	CAP	3.4
TOTAL CONCRETE:	59.0 CU. YD.	

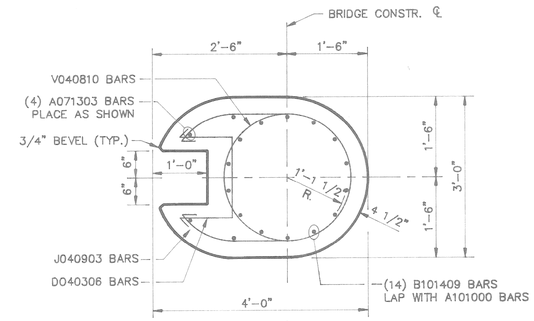

COLUMN SECTION

3/4" = 1'-0"

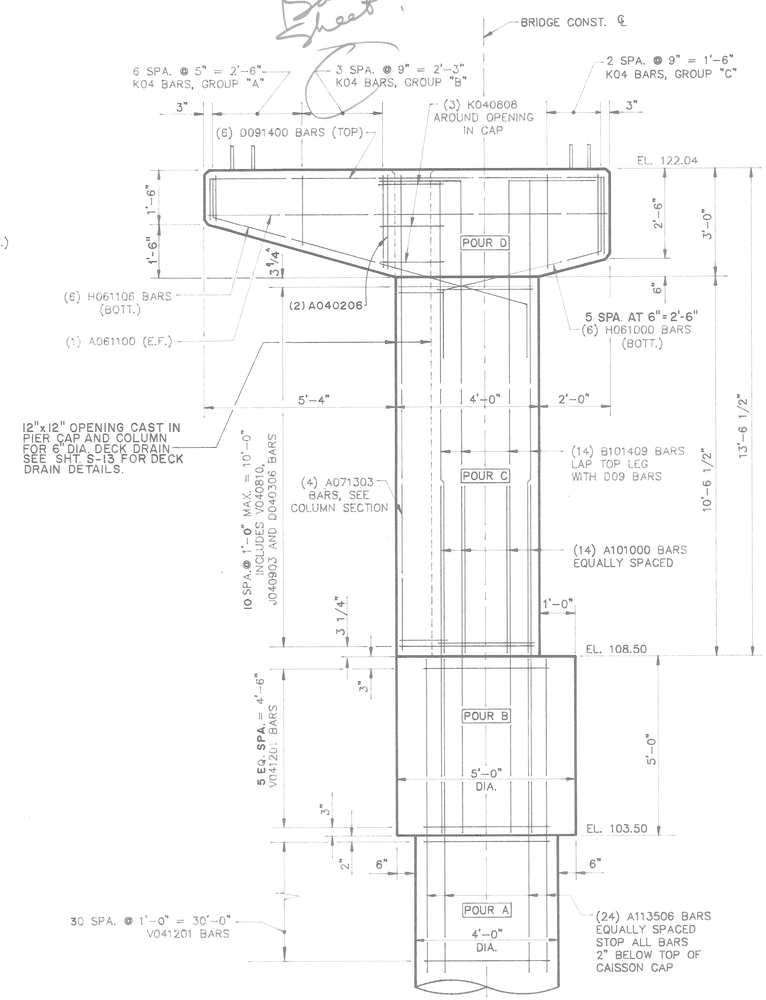

ELEVATION

1/2" = 1'-0"

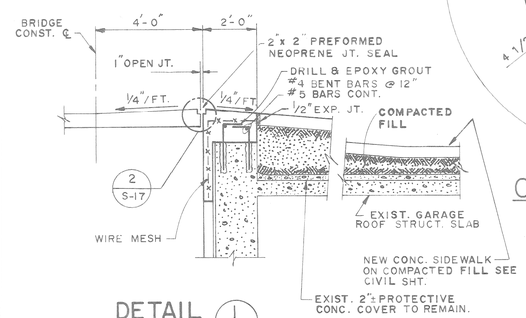

DETAIL 1 S-1

3/8" = 1'-0"

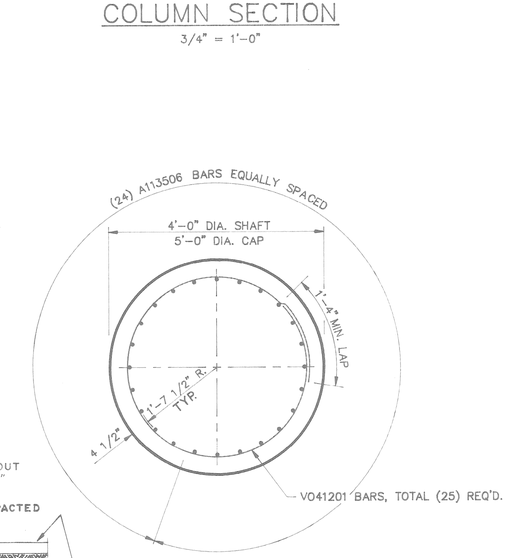

CAISSON SECTION

3/4" = 1'-0"

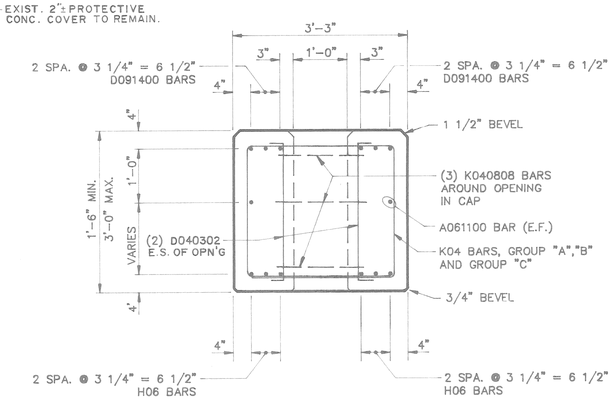

CAP SECTION

3/4" = 1'-0"

MISCELLANEOUS QUANTITIES		
ITEM	UNIT	AMOUNT
UNCLASSIFIED FOUNDATION EXCAVATION	CU. YDS.	69
STRUCTURE BACKFILL (C.I.P.)	CU.YDS.	17
PROTECTIVE SEALANT COATING	SQ.FT.	

PROJECT: RANDOLPH STREET PEDESTRIAN BRIDGE

SHEET TITLE: PIER 1 DETAILS

MADISON MADISON INTERNATIONAL OF MICHIGAN
Engineers, Architects, Planners
1420 Washington Blvd.
Detroit, Michigan 48226

DESIGN BY: K.C.H./S.O.

DRAWN BY: B.M.M.

CHECKED BY:

PROJECT No. 8612

AUTOCAD No. 8612-001

SHEET No. S-1

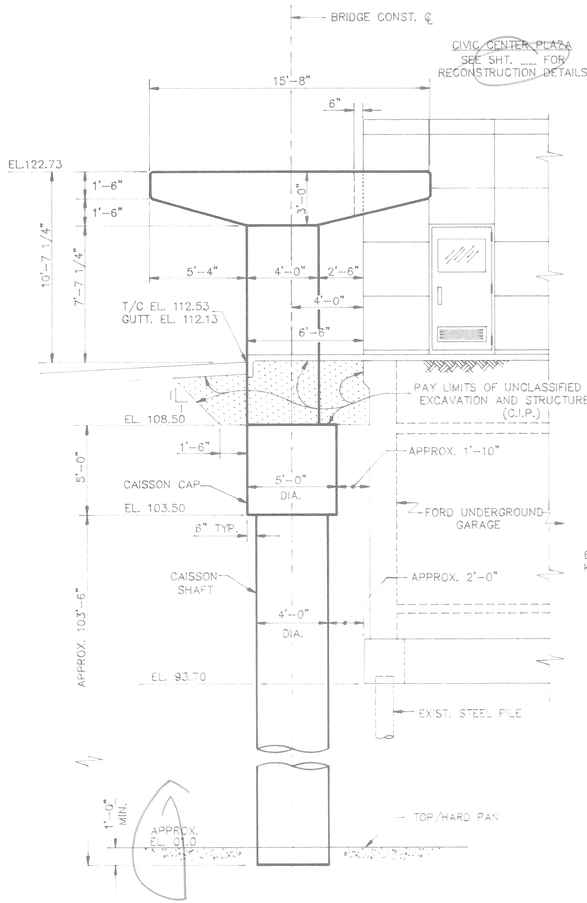

ELEVATION

1/4" = 1'-0"

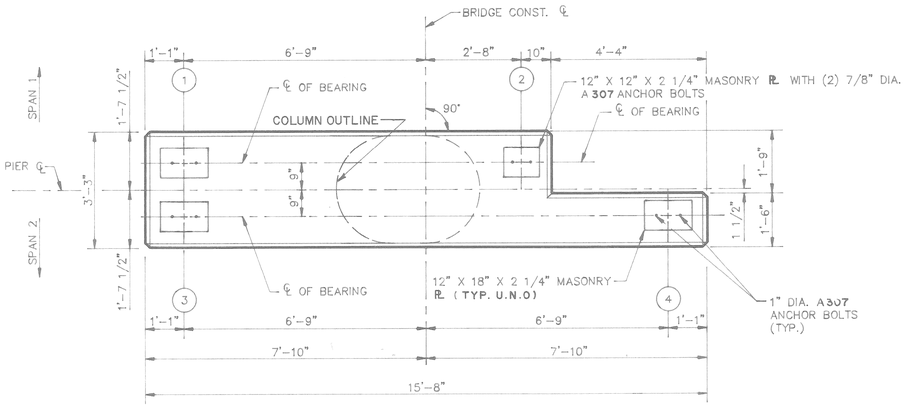

PLAN OF CAP

1/2" = 1'-0"

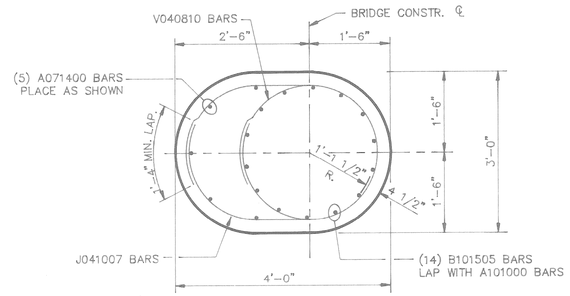

COLUMN SECTION

3/4" = 1'-0"

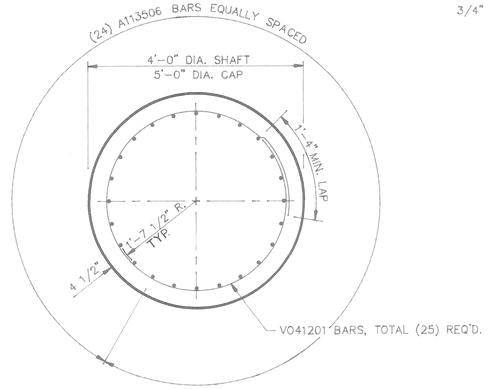

CAISSON SECTION

3/4" = 1'-0"

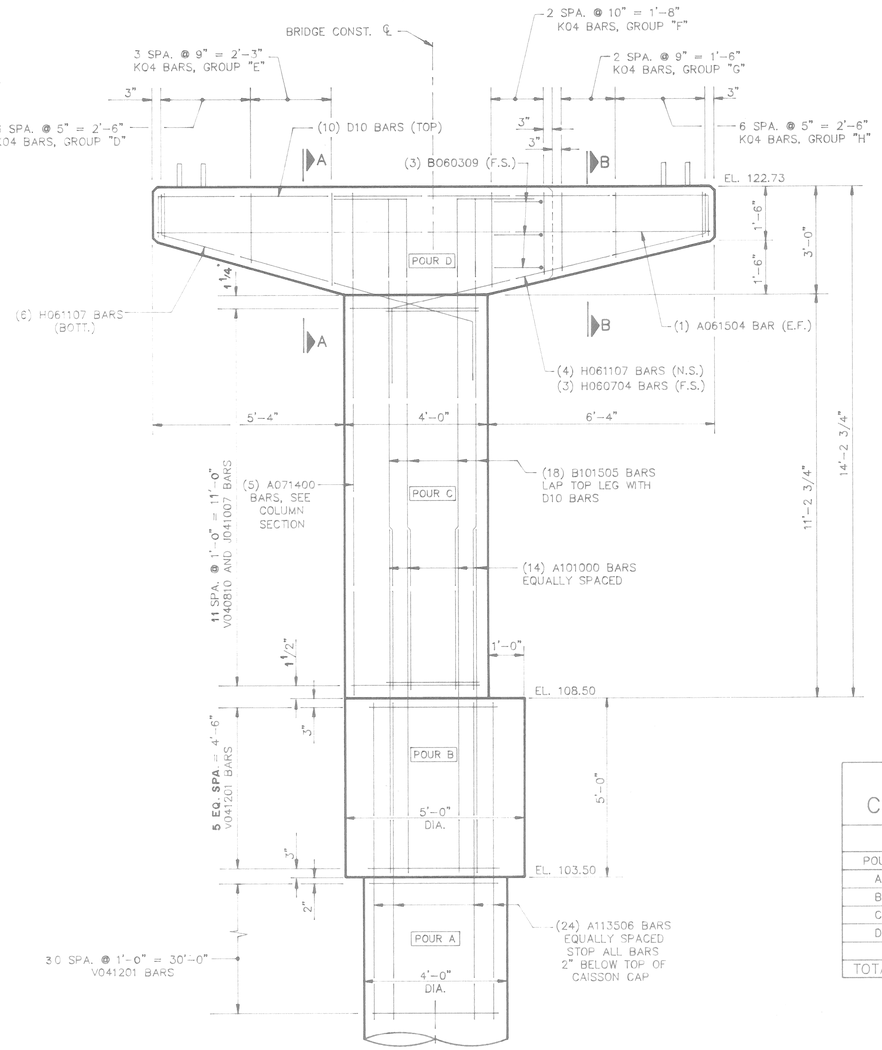

ELEVATION

1/2" = 1'-0"

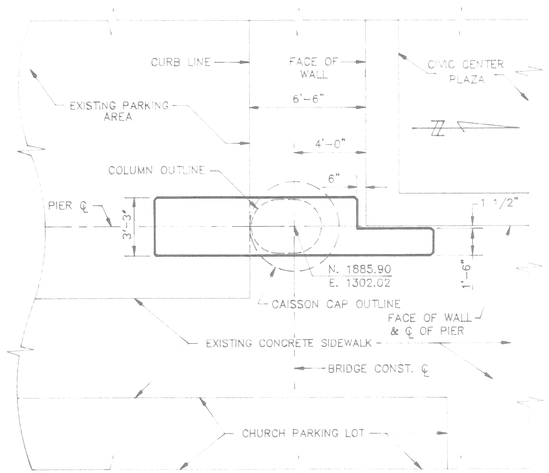

PLAN

1/4" = 1'-0"

SUBSTRUCTURE CONCRETE QUANTITIES		
PIER 2		
POUR	LOCATION	AMOUNT (CU. YD.)
A	CAISSON	48.2
B	CAP	3.9
C	COLUMN	3.8
D	CAP	4.0
TOTAL CONCRETE:		59.9 CU. YD.

MISCELLANEOUS QUANTITIES		
ITEM	UNIT	AMOUNT
UNCLASSIFIED FOUNDATION EXCAVATION	CU. YDS.	69.1
STRUCTURE BACKFILL (C.I.P.)	CU.YDS.	17.0
PROTECTIVE SEALANT COATING	SQ. FT.	

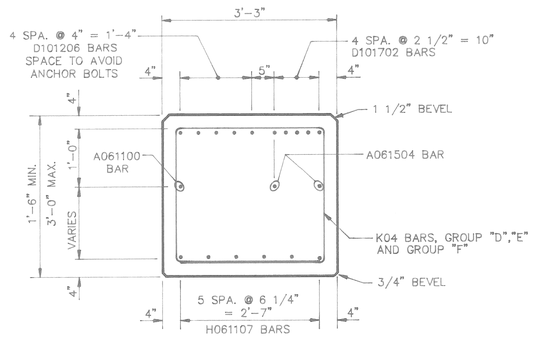

CAP SECTION A–A

3/4" = 1'-0"

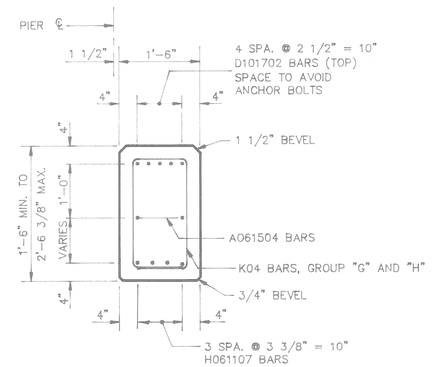

CAP SECTION B–B

3/4" = 1'-0"

RANDOLPH STREET PEDESTRIAN BRIDGE

PIER 2 DETAILS

MADISON MADISON INTERNATIONAL OF MICHIGAN
Engineers, Architects, Planners
1420 Washington Blvd.
Detroit, Michigan 48226

DESIGN BY: K.C.H./S.O.

DRAWN BY: B.M.M.

CHECKED BY:

PROJECT No. 8612

AUTOCAD No. 8612–002

SHEET No. S-2

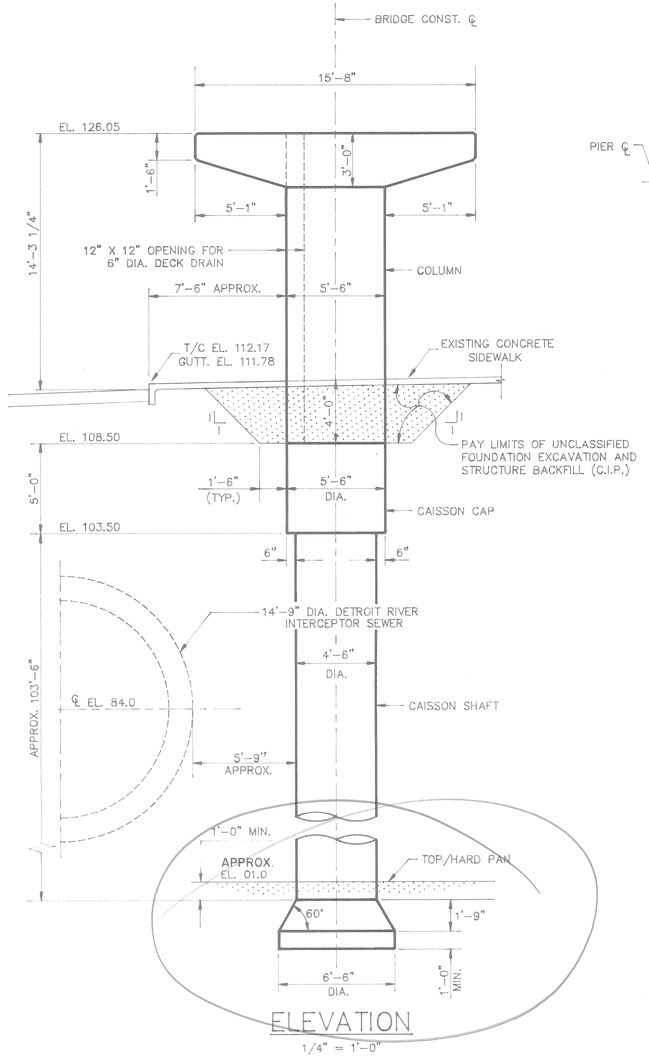

ELEVATION

1/4" = 1'-0"

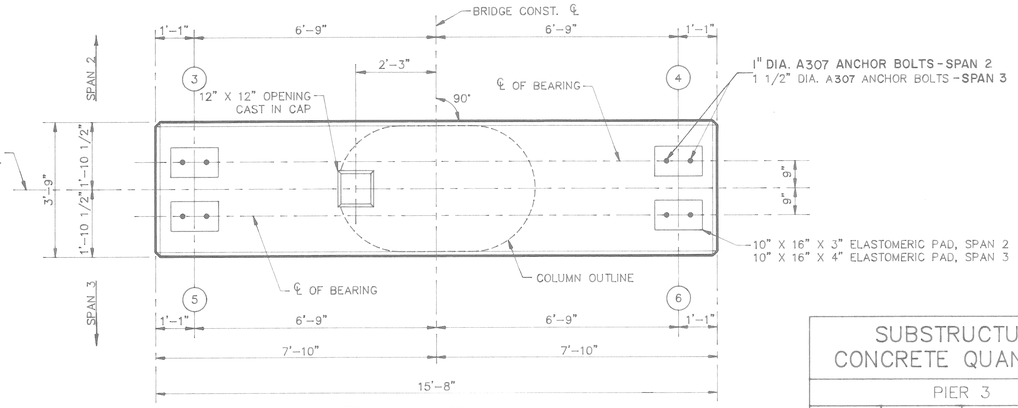

PLAN OF CAP

1/2" = 1'-0"

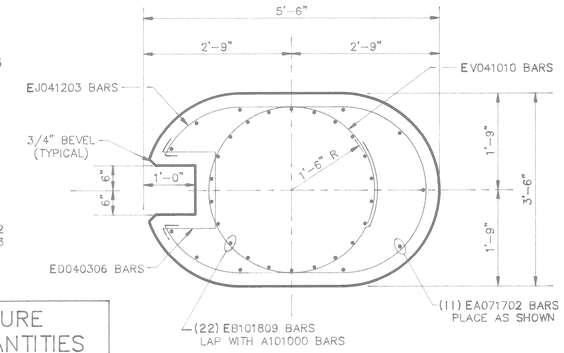

COLUMN SECTION

3/4" = 1'-0"

SUBSTRUCTURE CONCRETE QUANTITIES		
PIER 3		
POUR	LOCATION	AMOUNT (CU. YD.)
A	CAISSON	64.0
B	CAP	4.40
C	COLUMN	8.50
D	CAP	5.40
TOTAL CONCRETE:		82.30 CU. YD.

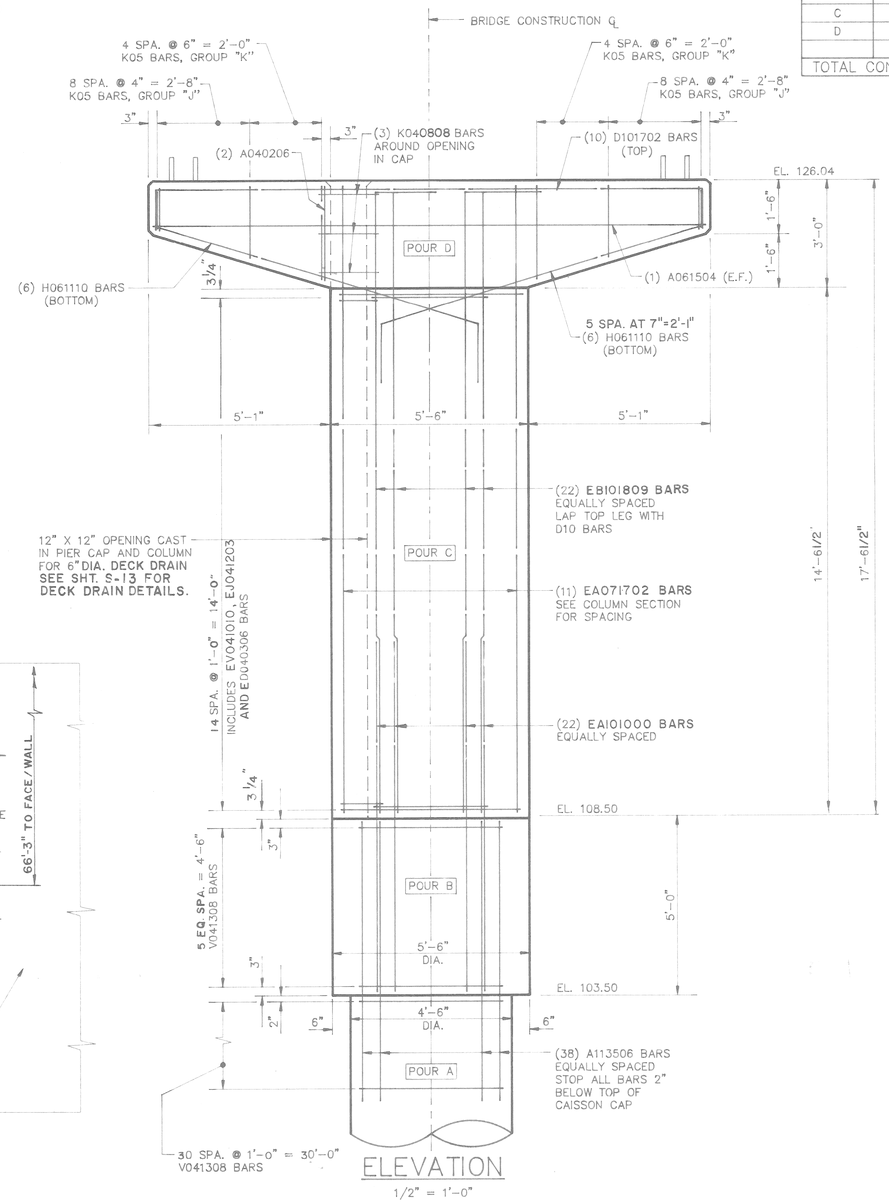

ELEVATION

1/2" = 1'-0"

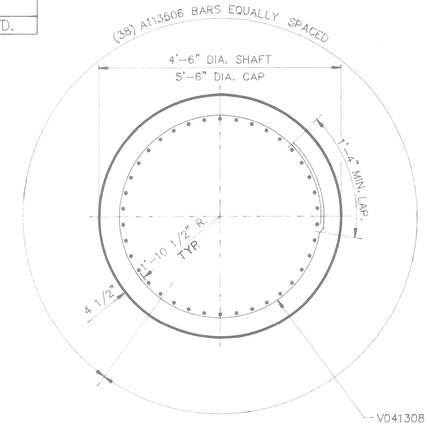

CAISSON SECTION

3/4" = 1'-0"

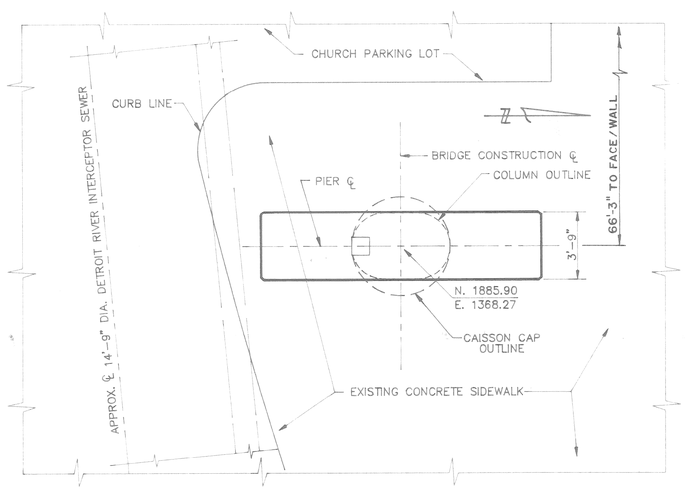

PLAN

1/4" = 1'-0"

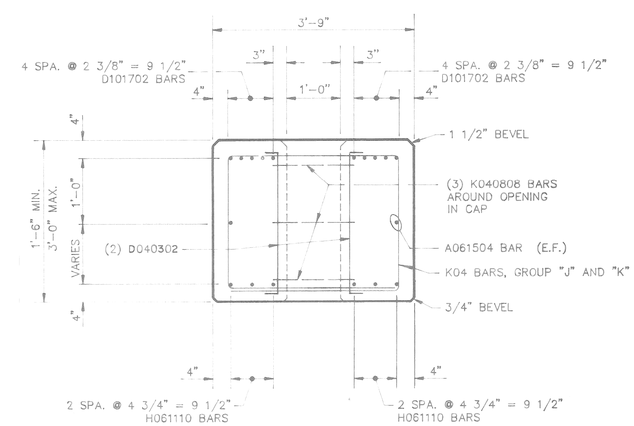

CAP SECTION

3/4" = 1'-0"

MISCELLANEOUS QUANTITIES		
ITEM	UNIT	AMOUNT
UNCLASSIFIED FOUNDATION EXCAVATION	CU. YDS.	90.0
STRUCTURE BACKFILL (C.I.P.)	CU.YDS.	22.0
PROTECTIVE SEALANT COATING	SQ. FT.	

PROJECT: RANDOLPH STREET PEDESTRIAN BRIDGE

SHEET TITLE: PIER 3 DETAILS

MADISON MADISON INTERNATIONAL OF MICHIGAN
Engineers, Architects, Planners
1420 Washington Blvd.
Detroit, Michigan 48226

DESIGN BY: K.C.H./S.O.

DRAWN BY: B.M.M.

CHECKED BY:

PROJECT No. 8612

AUTOCAD No. 8612-003

SHEET No. S-3

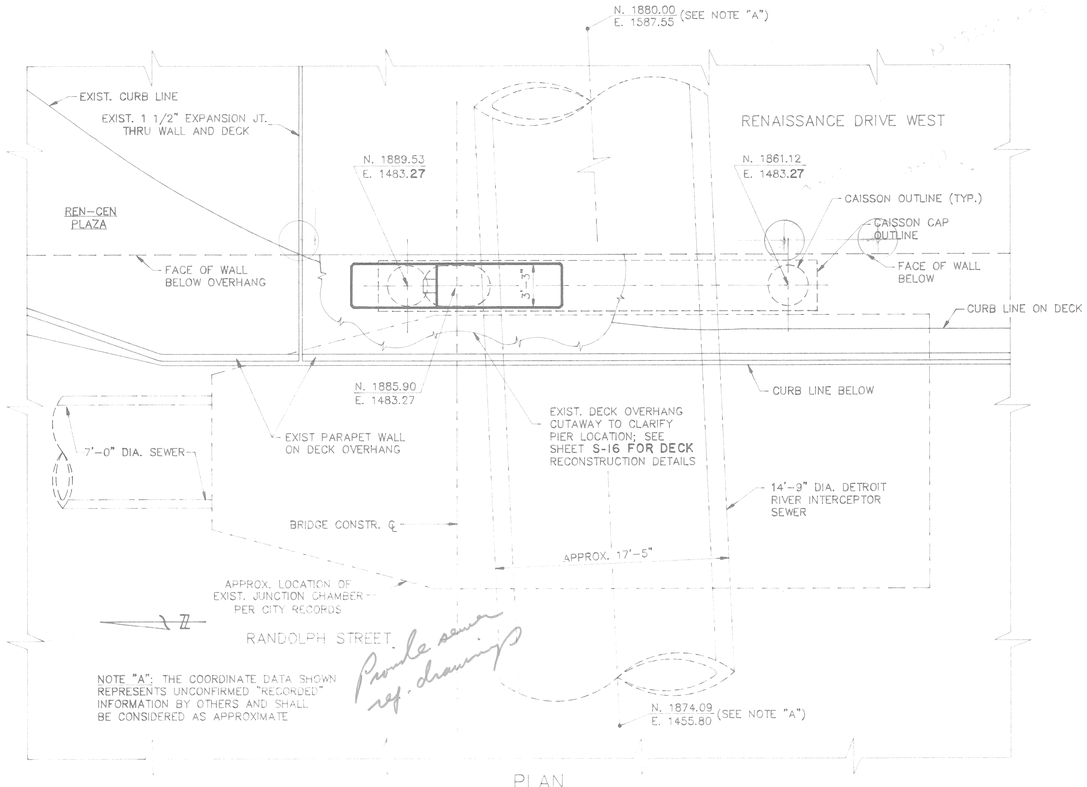

PLAN
3/16" = 1'-0"

NOTE: SEE SHEET S-5 FOR PIER 4 STRUCTURAL DETAILS

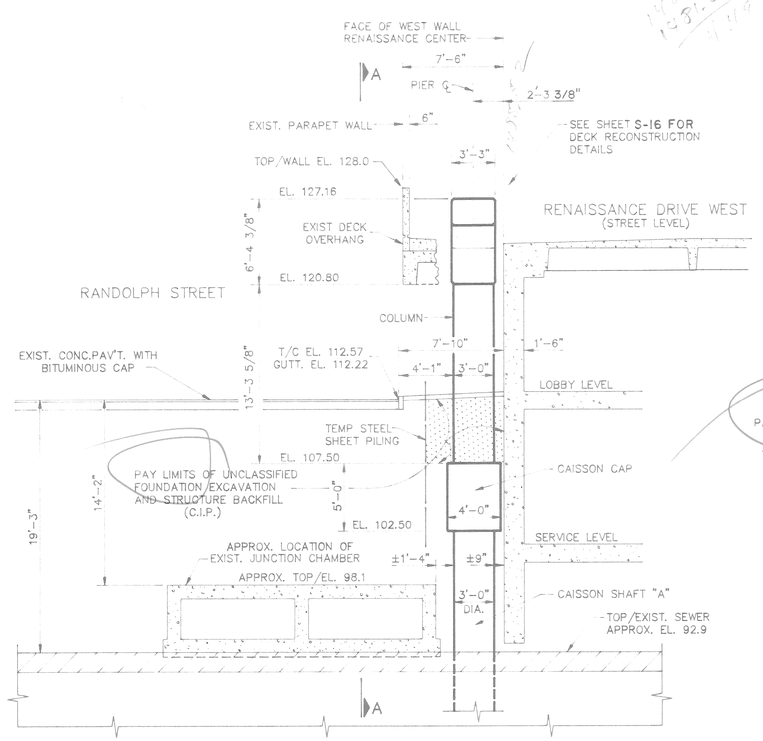

SECTION B–B
3/16" = 1'-0"

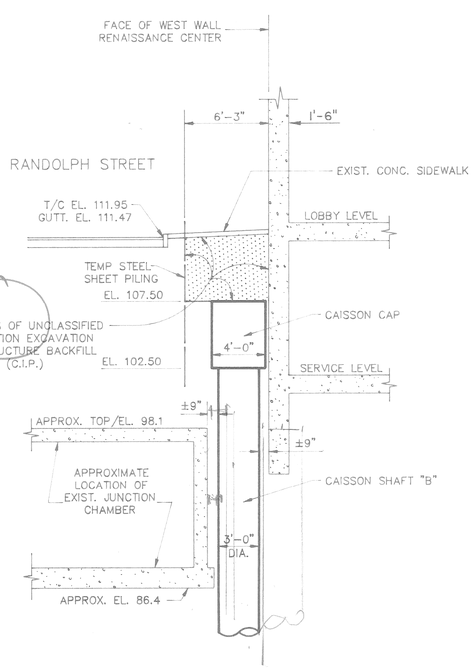

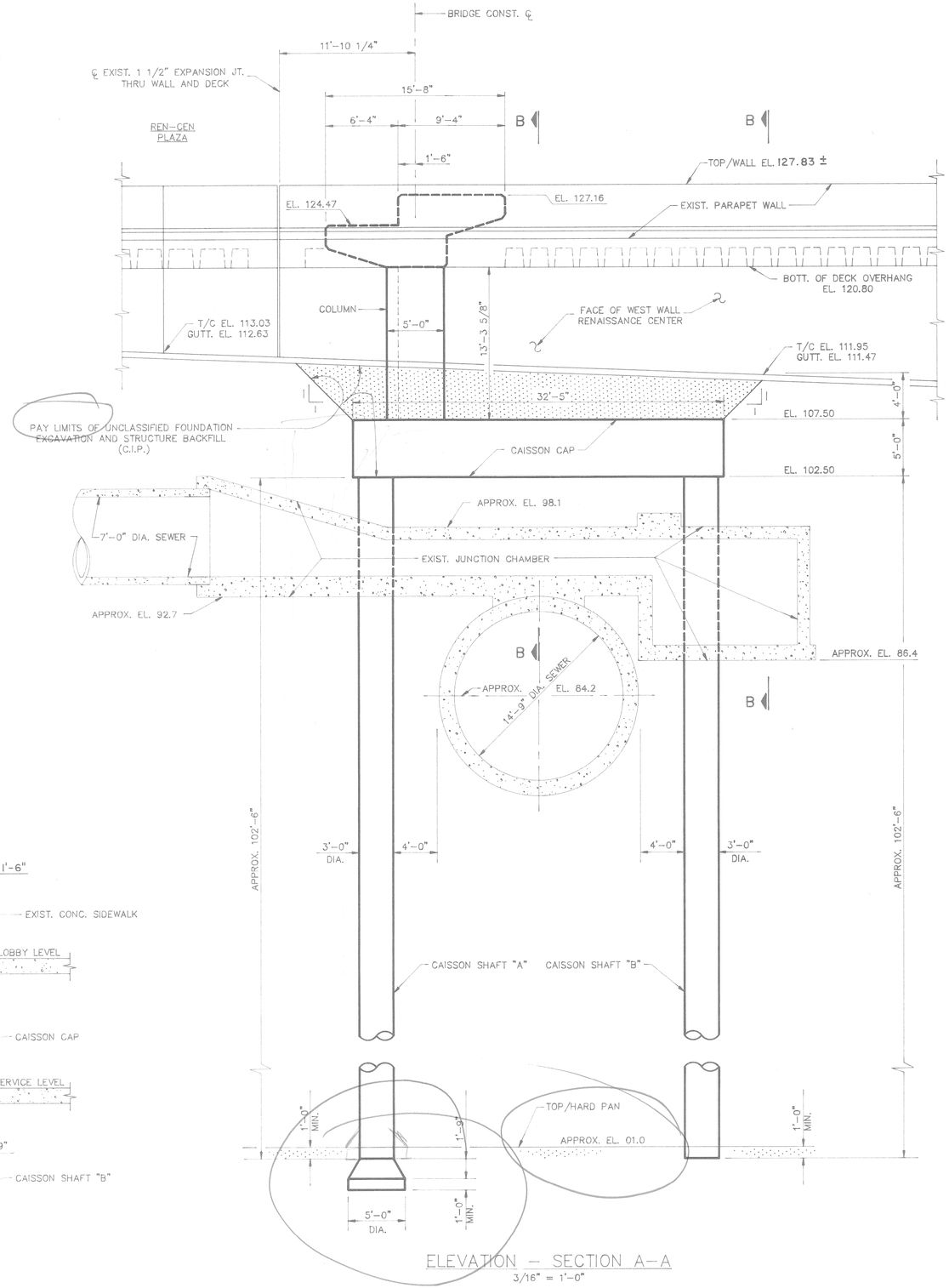

ELEVATION – SECTION A–A
3/16" = 1'-0"

PROJECT: RANDOLPH STREET PEDESTRIAN BRIDGE

SHEET TITLE: PIER 4 DETAILS

MADISON MADISON INTERNATIONAL OF MICHIGAN
Engineers, Architects, Planners
1420 Washington Blvd.
Detroit, Michigan 48226

DESIGN BY: K.C.H./S.O.

DRAWN BY: B.M.M.

CHECKED BY:

PROJECT No. 8612

AUTOCAD No. 8612–004

SHEET No. S-4

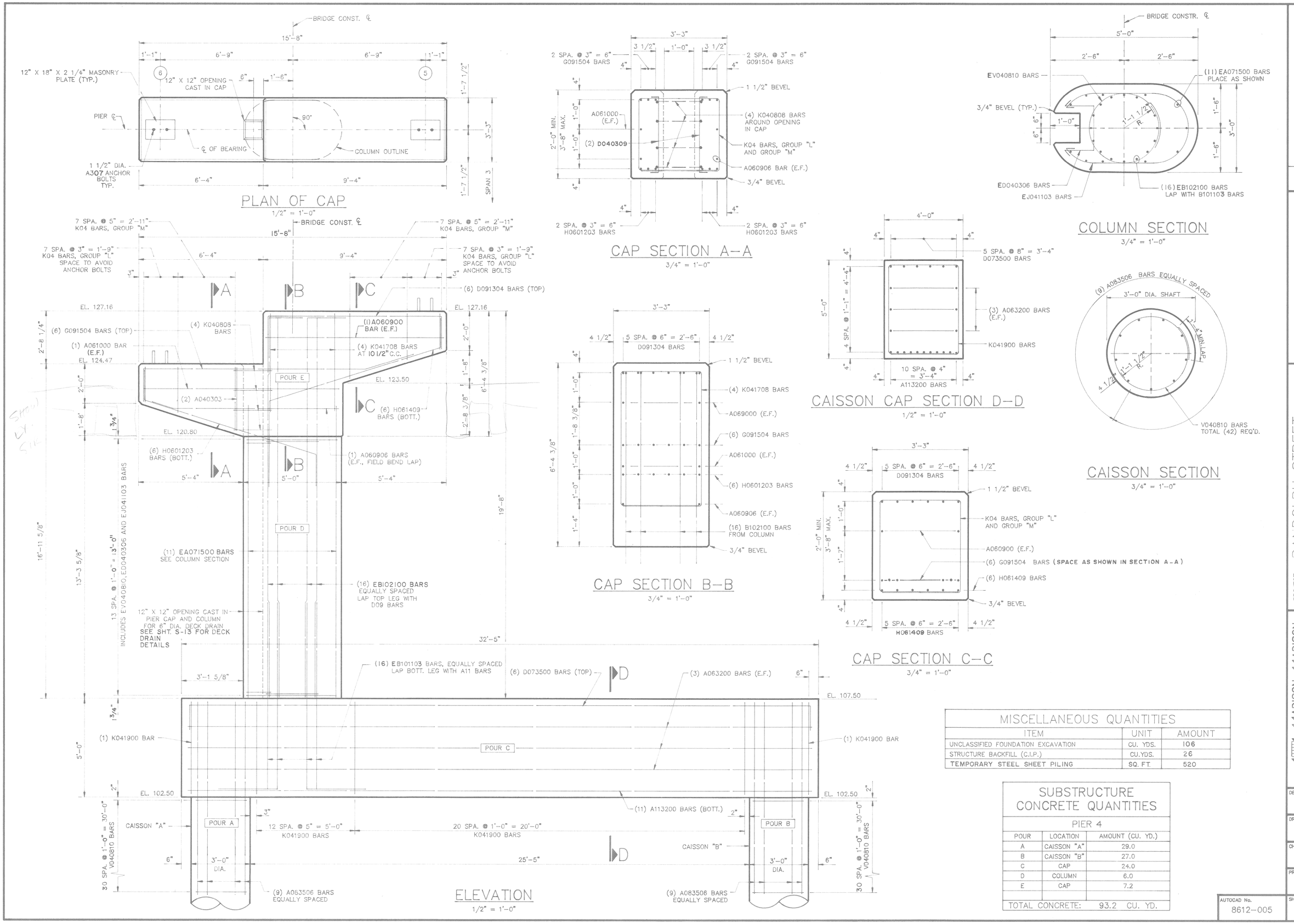

MISCELLANEOUS QUANTITIES

ITEM	UNIT	AMOUNT
UNCLASSIFIED FOUNDATION EXCAVATION	CU. YDS.	106
STRUCTURE BACKFILL (C.I.P.)	CU.YDS.	26
TEMPORARY STEEL SHEET PILING	SQ. FT.	520

SUBSTRUCTURE CONCRETE QUANTITIES

PIER 4

POUR	LOCATION	AMOUNT (CU. YD.)
A	CAISSON "A"	29.0
B	CAISSON "B"	27.0
C	CAP	24.0
D	COLUMN	6.0
E	CAP	7.2
TOTAL CONCRETE:		93.2 CU. YD.

PROJECT: RANDOLPH STREET PEDESTRIAN BRIDGE

SHEET TITLE: PIER 4 DETAILS

MADISON MADISON INTERNATIONAL OF MICHIGAN
Engineers, Architects, Planners
1420 Washington Blvd.
Detroit, Michigan 48226

DESIGN BY: K.C.H./S.O.

DRAWN BY: B.M.M.

CHECKED BY:

PROJECT No. 8612

AUTOCAD No. 8612-005

SHEET No. S-5

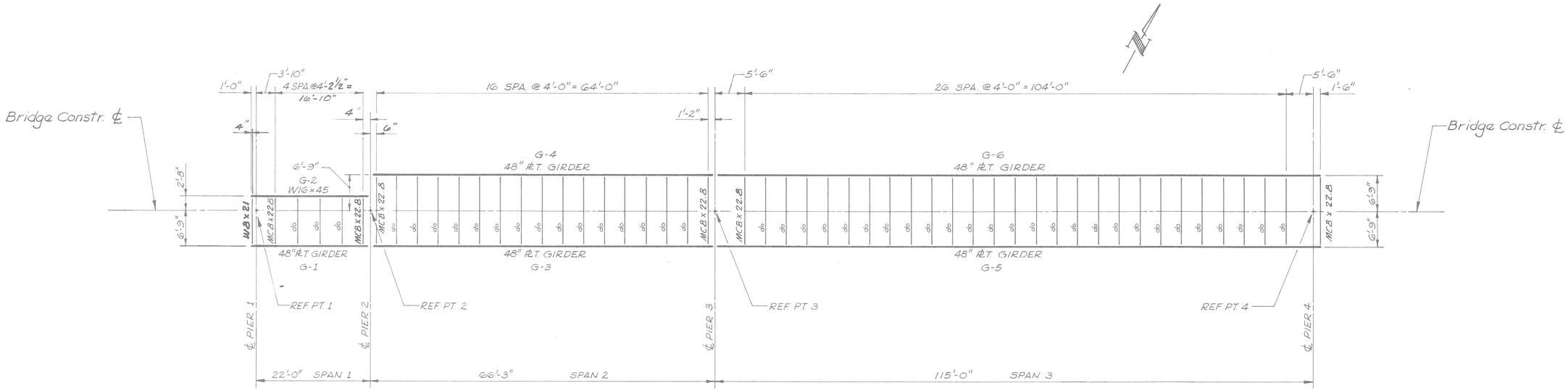

ERECTION DIAGRAM

℞ GIRDER/BEAM SCHEDULE	
MARK	SIZE
G-1	FLANGE (T&B): 7/8" x 16" WEB: 3/8" x 48"
G-2	W16 x 45
G-3 G-4	FLANGE (T&B): 7/8" x 16" WEB: 3/8" x 48"
G-5 G-6	FLANGE (T&B): SEE SHEET S-7 WEB: 3/8" x 48"

GENERAL NOTES

DESIGN LOADING

WINDLOAD ON STRUCTURE: 50 PSF ON VERTICAL PROJECTION

DEFLECTION - 1/800 OF SPAN FOR LIVE LOAD. DECK LIVE LOAD SHALL BE IN ACCORDANCE WITH AASHTO STANDARD SPECIFICATIONS FOR HIGHWAY BRIDGES. ASSUMED LIVE LOAD = ~~85~~ 100 PSF.

DESIGN CRITERIA - AASHTO STANDARD SPECIFICATIONS FOR HIGHWAY BRIDGES, CURRENT EDITION.

AASHTO GUIDE SPECIFICATIONS FOR FRACTURE CRITICAL NON-REDUNDANT STEEL BRIDGE MEMBERS, 1979. FRACTURE CRITICAL MEMBERS (FCM's) OR COMPONENTS OF MEMBERS ARE DESIGNATED ON THE DRAWINGS WITH THE SYMBOL ⊗. NOTE ALL ROLLED SECTIONS WITH AT LEAST 14" DEPTH ARE CONSIDERED FCM's.

MATERIALS - STRUCTURAL STEEL: PER MDOT, 1984 STANDARD SPECIFICATIONS, DIVISION 8. ALL MATERIAL ASTM A36.

CONCRETE:

28 DAYS COMPRESSIVE STRENGTH - special spec. ?

CAISSONS AND GRADE BEAM - 5000 PSI
PIER COLUMNS AND CAP - 4500 PSI (MDOT 45D)
DECK SLABS - 4500 PSI (MDOT 45D)

REINFORCEMENT:

PER MDOT, 1984 STANDARD SPECIFICATION, DIVISION 8:

VERTICAL REINFORCEMENT IN COLUMNS AND CAISSONS: ASTM A615 GRADE 60
DECK SLAB REINFORCEMENT: ASTM A615 GRADE 60
MESH: ASTM A185
TIES: ASTM A615 GRADE 40

SOIL BEARING PRESSURES USED IN DESIGN: CAISSONS - 50 KSF (25 TONS/SF)
SEE SOIL BORING LOGS AND REPORT IN SPECIFICATIONS.

STRUCTURAL STEEL

WELDING, TESTING & INSPECTION OF STRUCTURAL STEEL - MDOT 1984 STANDARD SPECIFICATIONS FOR CONSTRUCTION & MDOT SPECIAL PROVISIONS FOR FABRICATING STRUCTURAL STEEL & ALUMINUM, AS MODIFIED BY THE SPECIAL PROVISIONS FOR STRUCTURAL STEEL. THE AASHTO GUIDE SPECIFICATIONS FOR FRACTURE CRITICAL NON-REDUNDANT STEEL BRIDGE MEMBERS SHALL TAKE PRECEDENCE OVER THE ABOVE, WHERE THE AASHTO REQUIRMENTS ARE MORE STRINGENT THAN THE PRECEDING SPECIFICATIONS.

FIELD CONNECTIONS - SHALL BE BOLTED WITH 3/4-IN. DIAMETER HIGH STRENGTH BOLTS, EXCEPT AS NOTED. HIGH STRENGTH STEEL BOLTS, NUTS AND WASHERS, SHALL CONFORM TO ASTM A-325, TYPE 1, GALVANIZED.

CAMBER - GIRDERS SHALL BE CAMBERED FOR DEAD LOAD DEFLECTION IN ADDITION TO PERMANENT CAMBER DUE TO VERTICAL CURVATURE. HEATING SHALL BE USED, IF NECESSARY, TO ASSURE CAMBER PERMANENCY WITHIN TOLERANCE OF ±1/4-IN. AT THE CENTER. THIS CAMBER SHALL BE MEASURED WITH THE BEAM LYING ON ITS SIDE.

PAINTING - ALL STRUCTURAL STEEL SHALL BE PAINTED IN ACCORDANCE WITH THE SPECIAL PROVISIONS.

STEEL - STRUCTURAL STEEL SHALL CONFORM TO ASTM A-36.

FABRICATION - SHALL BE IN ACCORDANCE WITH MICHIGAN DEPARTMENT OF STATE HIGHWAYS STANDARD SPECIFICATIONS FOR HIGHWAY CONSTRUCTION - 1984 EDITION.

SHOP ASSEMBLY - ALL MEMBERS WHETHER REAMED OR PUNCHED, SHALL BE ASSEMBLED AT THE FABRICATING PLANT, UNLESS OTHERWISE NOTED. ALL STEEL STRUCTURES HAVING REAMED FIELD CONNECTIONS SHALL BE ASSEMBLED, UNLESS OTHERWISE NOTED, BEFORE REAMING IS COMMENCED. ASSEMBLED STEEL STRUCTURES SHALL NOT BE KNOCKED DOWN UNTIL AFTER THE SHOP INSPECTION HAS BEEN MADE.

WELDING - THE MINIMUM SIZE OF WELD SHALL BE 5/16-IN. UNLESS OTHERWISE SHOWN ON THE PLANS. ALL WELDING SHALL BE DONE IN ACCORDANCE WITH A.W.S. SPECIFICATIONS.

WELDING ON THE TENSION FLANGES OF BEAMS SHALL NOT BE PERMITTED UNLESS SUCH WELDING IS SHOWN ON THE PLANS OR SPECIFIED. WELDING AT OTHER LOCATIONS ON THE BEAMS, EXCEPT WHERE SHOWN ON THE PLANS, MAY BE PERMITTED BY WRITTEN AUTHORIZATION PROVIDING THE WELDING IS PERFORMED IN STRICT ACCORDANCE WITH ALL SPECIFICATION REQUIREMENTS FOR STRUCTURAL WELDING.

ALL FIELD SPLICES WILL BE BOLTED. THE CONTRACTOR SHALL SUBMIT ANY PROPOSED FIELD SPLICE LOCATIONS AND DESIGNS TO THE ENGINEER FOR APPROVAL.

THE STRUCTURAL STEEL FABRICATOR SHALL BE CERTIFIED UNDER THE AISC QUALITY CERTIFICATION PROGRAM AS A CATEGORY III PLANT (MAJOR STEEL BRIDGES).

EPOXY COAT STEEL ? IN DECK & WALLS, ETC

Project: RANDOLPH STREET PEDESTRIAN BRIDGE

Sheet Title: STRUCTURAL STEEL DETAILS

MADISON INTERNATIONAL OF MICHIGAN
Engineers, Architects, Planners
1420 Washington Blvd.
Detroit, Michigan 48226

DESIGN BY: K.C.H. / S.O.
DRAWN BY: C.J.B.
CHECKED BY:
DATE:
PROJECT NO. 8612
SHEET NO. S-6

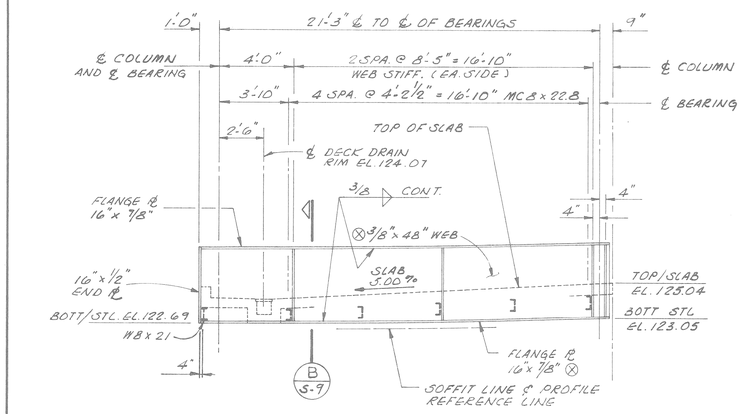

GIRDER G-1

SCALE 1/4" = 1'-0"

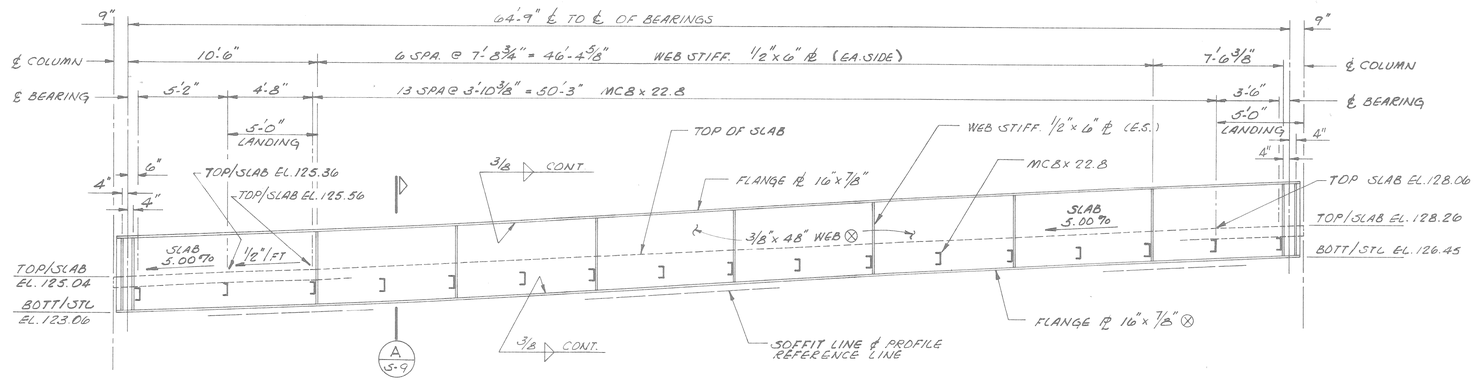

GIRDER G-4 (SHOWN)
GIRDER G-3 (OPP. HAND)

SCALE 1/4" = 1'-0"

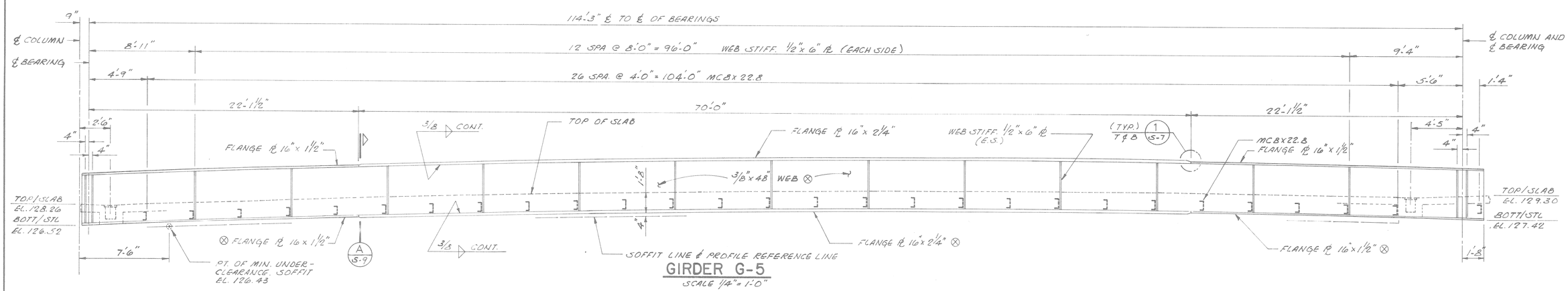

GIRDER G-5

SCALE 1/4" = 1'-0"

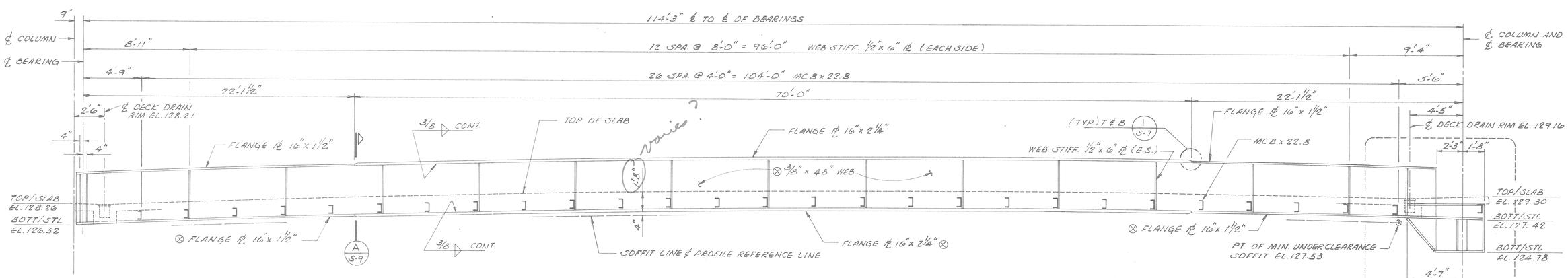

GIRDER G-6

SCALE 1/4" = 1'-0"

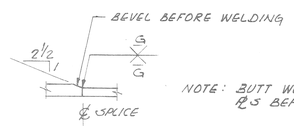

NOTE: BUTT WELD ALL FLANGE PL'S BEFORE WEB WELDING

DETAIL 1 / S-7

N.T.S.

⊗ = FRACTIONAL CRITERIA

Project: RANDOLPH STREET PEDESTRIAN BRIDGE

Sheet Title: STRUCTURAL STEEL DETAILS

MADISON INTERNATIONAL OF MICHIGAN
Engineers, Architects, Planners
1420 Washington Blvd.
Detroit, Michigan 48226

DESIGN BY	K.C.H. / S.O.
DRAWN BY	C.J.B.
CHECKED BY	
DATE	
PROJECT NO.	8612
SHEET NO.	S-7

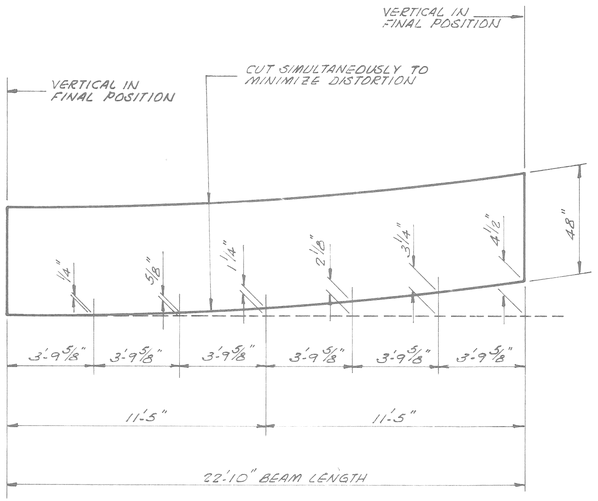

WEB CAMBER DIAGRAM - GIRDER G-1

NO SCALE

D.L. DEFLECTION AT MID SPAN = 1/8"

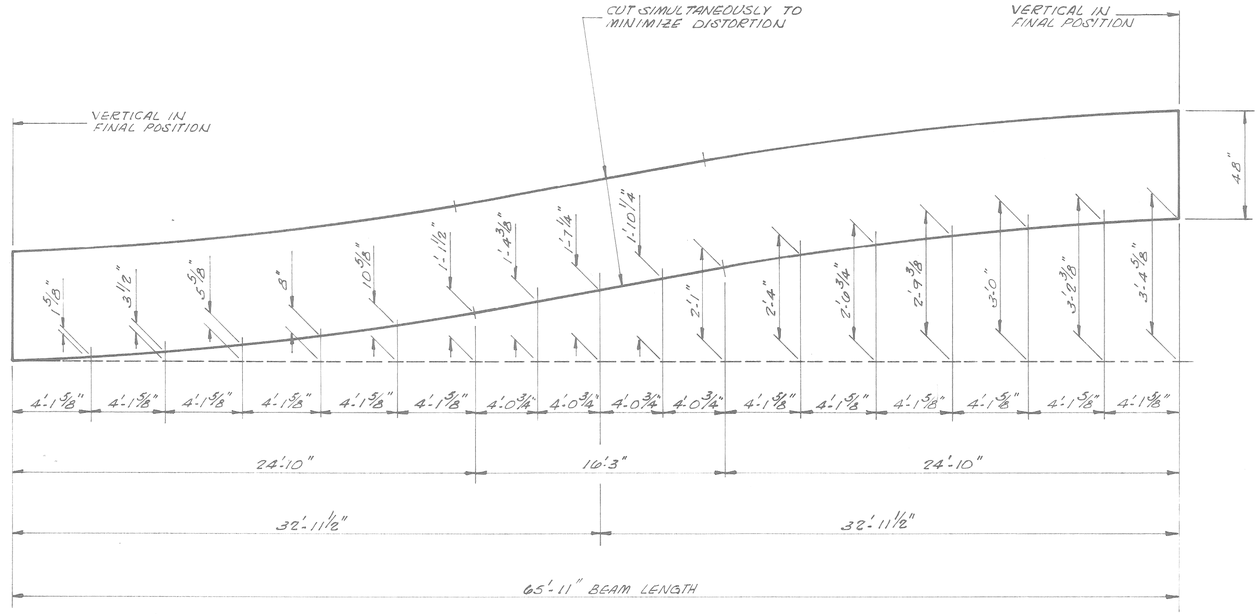

WEB CAMBER DIAGRAM - GIRDERS G-3 & G-4

NO SCALE

D.L. DEFLECTION AT MID SPAN = 5/8"

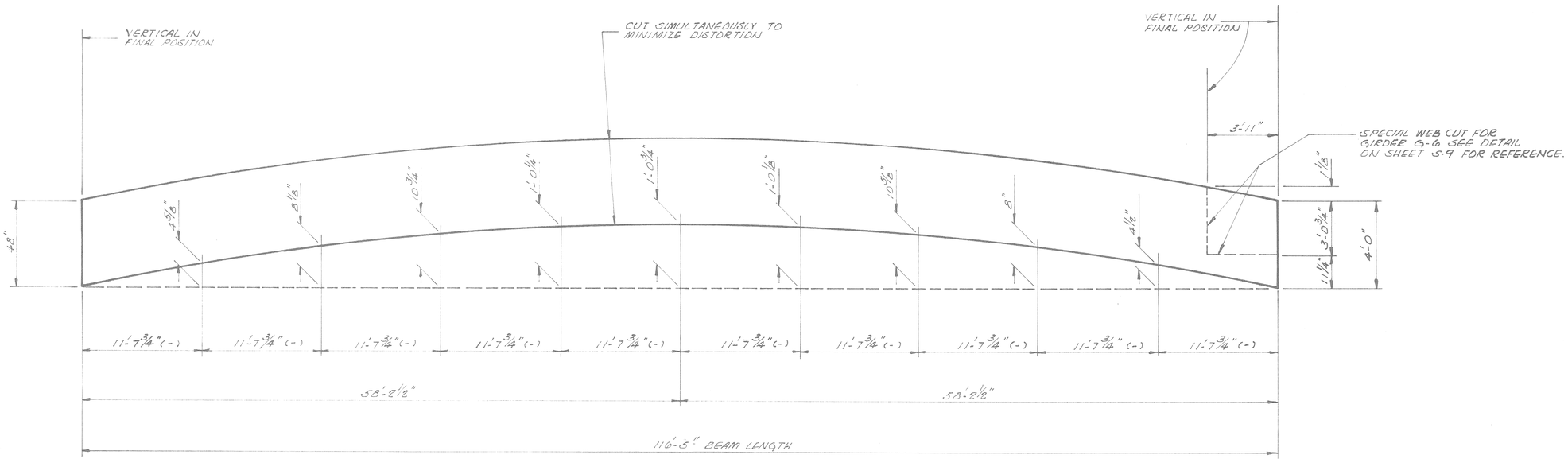

WEB CAMBER DIAGRAM - GIRDERS G-5 & G-6

NO SCALE

D.L. DEFLECTION AT MID SPAN = 3 1/16"

Project: RANDOLPH STREET PEDESTRIAN BRIDGE

Sheet Title: STRUCTURAL STEEL DETAILS

MADISON MADISON INTERNATIONAL OF MICHIGAN
Engineers, Architects, Planners
1420 Washington Blvd.
Detroit, Michigan 48226

DESIGN BY	K.C.H./S.D.
DRAWN BY	C.J.B.
CHECKED BY	
DATE	
PROJECT NO.	8612
SHEET NO.	S-8

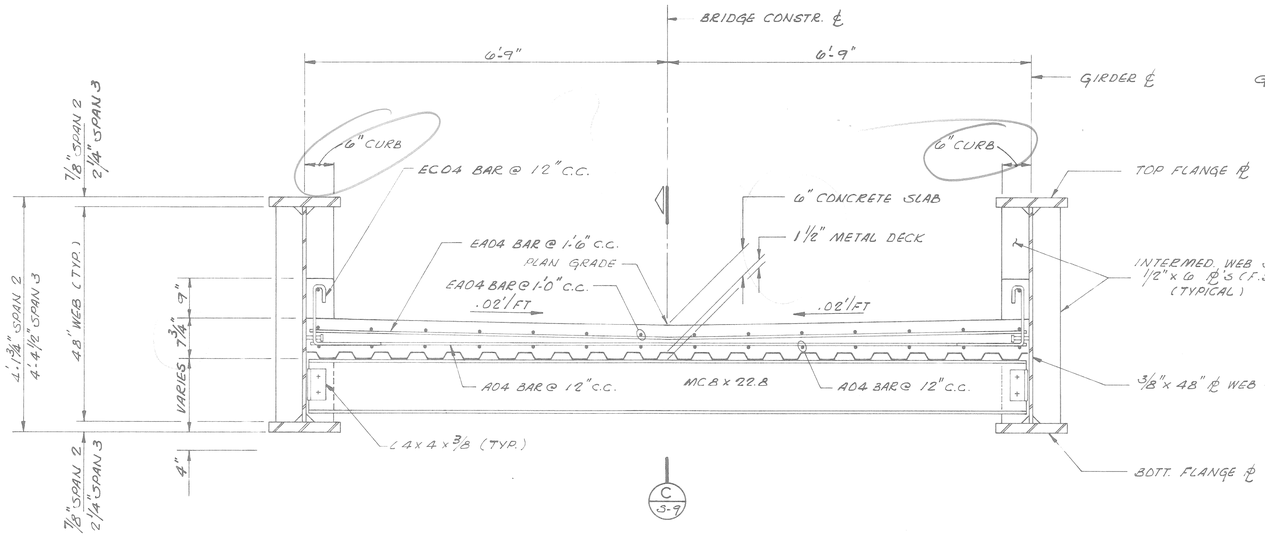

A S-7 TYPICAL DECK SECTION
SPANS 2 AND 3

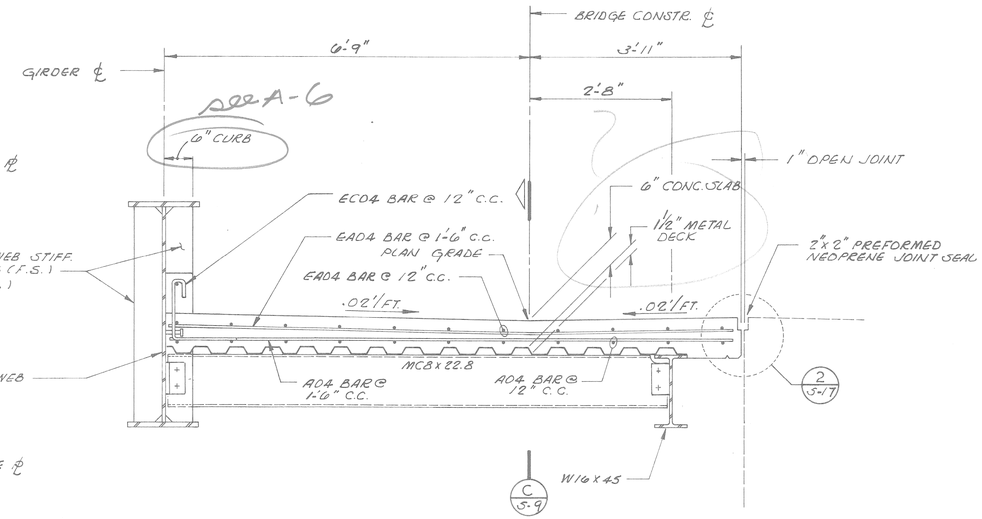

B S-7 TYPICAL DECK SECTION
SPAN 1

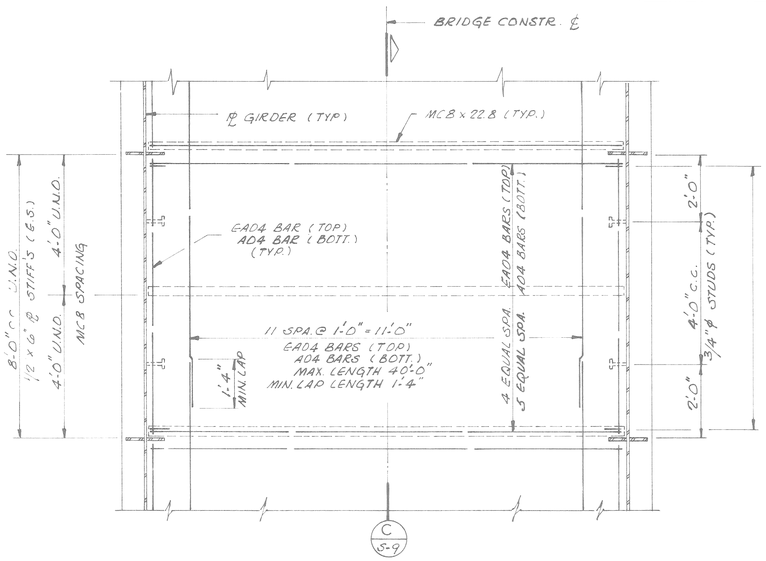

TYPICAL PLAN OF SLAB

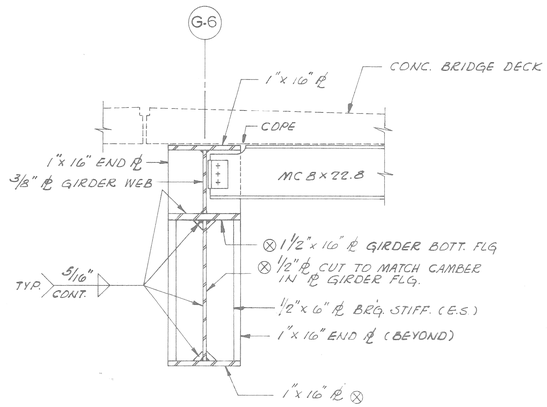

SECTION D S-9
SCALE 3/4" = 1'-0"

1. STOP WELD 1/4" SHORT OF CORNER CLIPS.
2. WRAP WELD AROUND OUTSIDE EDGE.
3. WELDING OF METAL DECK TO MCB'S SHALL CONFORM TO METAL DECK MANUFACTURERS SPECIFICATIONS.

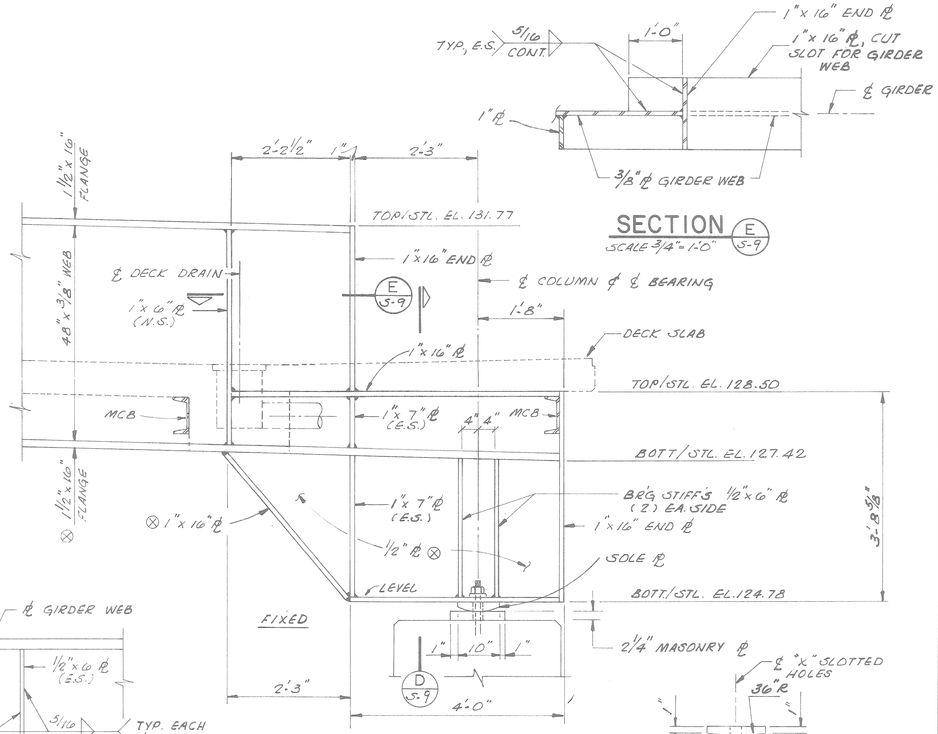

GIRDER G-6
END DETAIL
1 S-7
SCALE 3/4" = 1'-0"

SOLE PLATE FOR G-6
PIER 4

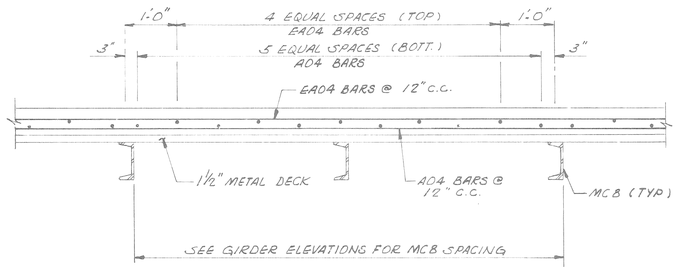

SECTION C S-9

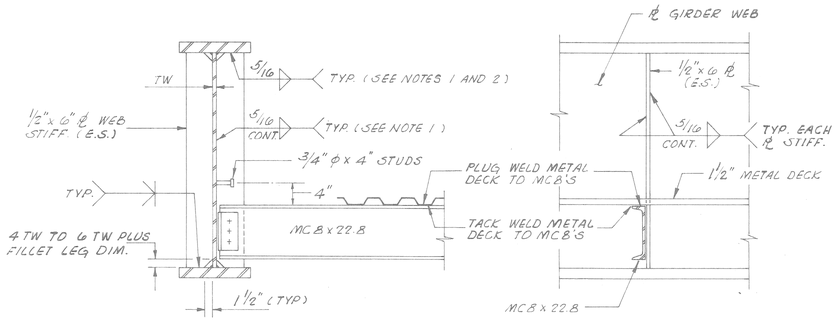

WEB STIFFENER WELD DETAILS

⊗ = FRACTIONAL CRITERIA

Project: RANDOLPH STREET PEDESTRIAN BRIDGE

Sheet Title: SUPERSTRUCTURE AND STRUCTURAL STEEL DETAILS

MADISON MADISON INTERNATIONAL OF MICHIGAN
Engineers, Architects, Planners
1420 Washington Blvd.
Detroit, Michigan 48226

DESIGN BY	K.C.H./S.O.
DRAWN BY	C.J.B.
CHECKED BY	
DATE	
PROJECT NO.	8612
SHEET NO.	S-9

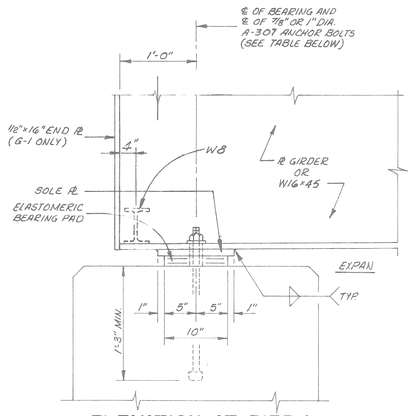

ELEVATION AT PIER 1
GIRDER G-1 SHOWN
GIRDER G-2 SIMILAR

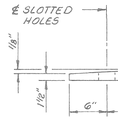

SOLE PL FOR G-1
PIER 1

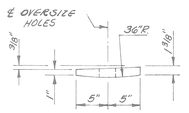

SOLE PL FOR G-1
PIER 2

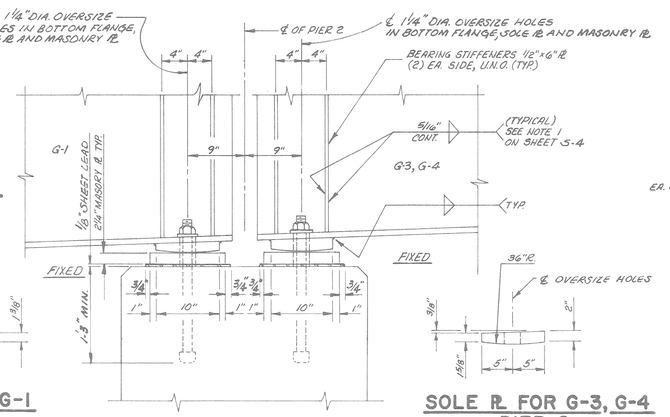

ELEVATION AT PIER 2

SOLE PL FOR G-3, G-4
PIER 2

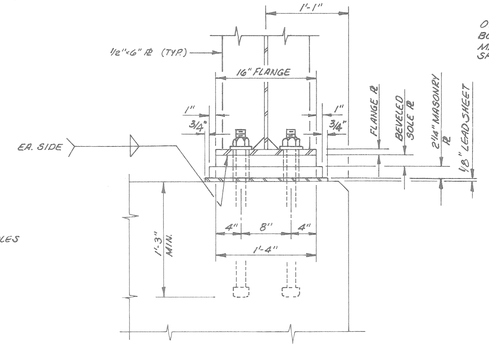

TYPICAL FRONT VIEW AT FIXED BR'G.
G-1, G-3, G-4, G-5 & G-6

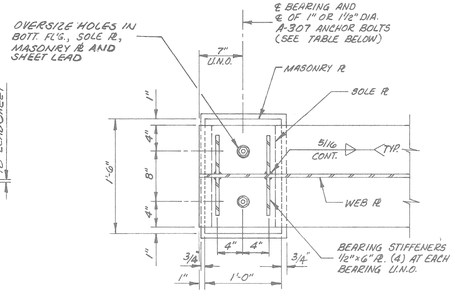

TYPICAL PLAN VIEW AT FIXED BR'G.
G-1, G-3, G-4, G-5 & G-6

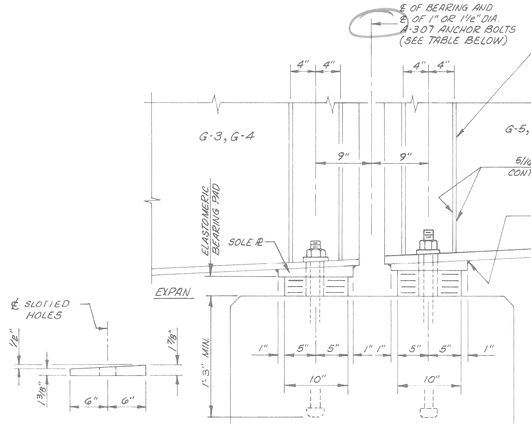

SOLE PL FOR G-3, G-4
PIER 3

ELEVATION AT PIER 3

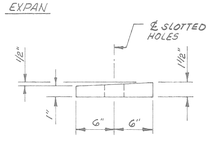

SOLE PL FOR G-5, G-6
PIER 3

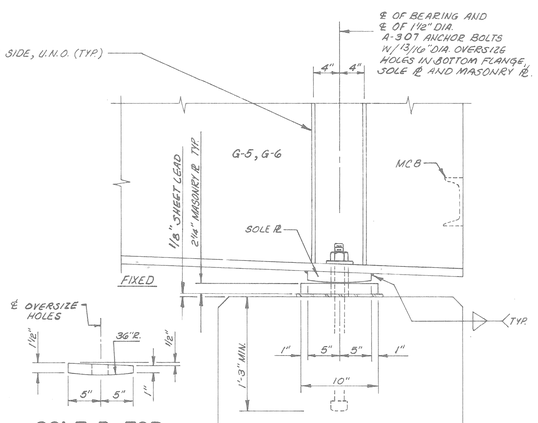

SOLE PL FOR
G-5
PIER 4

ELEVATION AT PIER 4
GIRDER G-5 SHOWN
GIRDER G-6 SIMILAR
(SEE SHT. S-4 FOR G-6 BR'G. DETAIL)

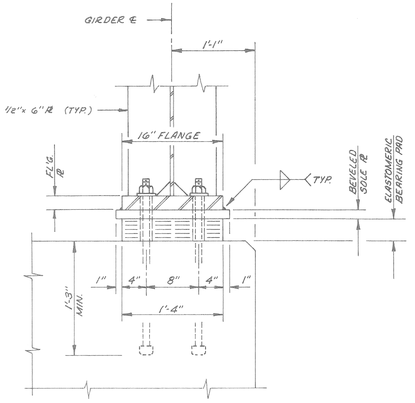

TYPICAL FRONT VIEW AT EXPAN. BR'G.
G-1, G-3, G-4, G-5 & G-6

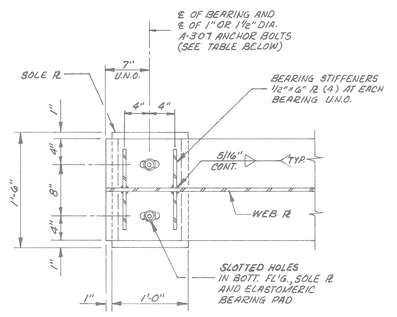

TYPICAL PLAN VIEW AT EXPAN. BR'G.
G-1, G-3, G-4, G-5 & G-6

ELASTOMERIC BEARING TABLE						
BEAM	G-1	G-2	G-3	G-4	G-5	G-6
LENGTH	10"	10"	10"	10"	10"	10"
WIDTH	1'-4"	1'-0"	1'-4"	1'-4"	1'-4"	1'-4"
a	1 1/2"	1 1/2"	3"	3"	4"	4"
b	1	2	4	4	6	6
c	3/8"	1/4"	3/8"	3/8"	3/8"	3/8"
d	2	3	5	5	7	7
e	3/32"	3/32"	3/32"	3/32"	3/32"	3/32"
f	1/2"	3/8"	1/2"	1/2"	1/2"	1/2"

NOTE:
ALL STEEL SOLE PL'S SHALL BE BEVELED. SEE INDIVIDUAL SOLE PL'T. DETAILS ON THIS SHEET.

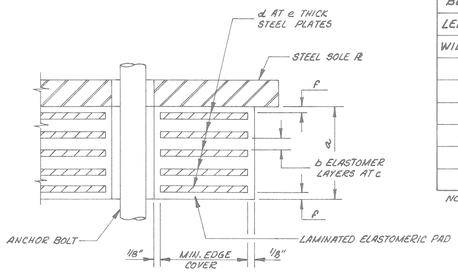

BEARING PAD DETAIL

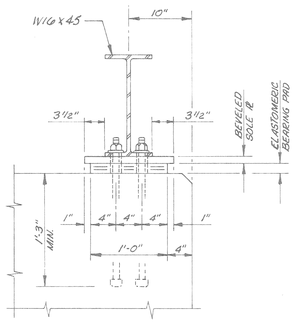

FRONT VIEW OF EXPAN. BR'G.
FOR GIRDER G-2

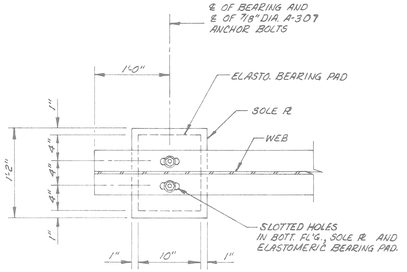

PLAN VIEW OF EXPAN. BR'G.
FOR GIRDER G-2

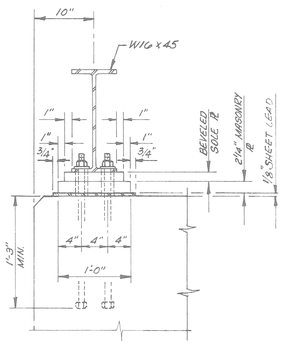

FRONT VIEW OF FIXED BR'G.
FOR GIRDER G-2

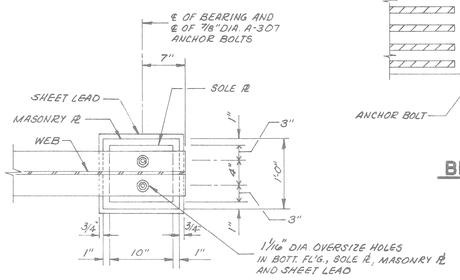

PLAN VIEW OF FIXED BR'G.
FOR GIRDER G-2

ASTM A-307 ANCHOR BOLT TABLE						
BEAM	G-1	G-2	G-3	G-4	G-5	G-6
DIA. SIZE	1"	7/8"	1"	1"	1 1/2"	1 1/2"
LENGTH	1'-9"	1'-8 3/8"	1'-10 7/8"	1'-10 7/8"	2'-1 1/4"	2'-1 1/4"
PROJECTION	6"	5 5/8"	8"	8"	9 1/2"	9 1/2"
SLOT. HOLES	1 1/16"x2 1/16"	15/16"x2 3/16"	1 1/16"x2 1/16"	1 1/16"x2 1/16"	1 3/16"x3 3/16"	1 3/16"x3 3/16"

NOTES:

ELASTOMER FOR LAMINATED PADS SHALL BE 50 DUROMETER HARDNESS.

THE TOP OF PIERS SHALL BE GIVEN AN APPLICATION OF PROTECTIVE SEALANT COATING FOR CONCRETE AFTER THE ELASTOMERIC PADS HAVE BEEN PLACED IN THE FINAL POSITION ON THE STRUCTURE.

STEEL SOLE PLATES AND ANCHOR BOLTS ARE ~~INCLUDED IN THE~~ STRUCTURAL STEEL WEIGHTS ON SHEET ~~M-6~~

SLOTTED HOLES IN ALL BEARING MATERIALS SHALL BE CENTERED ON THE ANCHOR BOLTS.

Project: RANDOLPH STREET PEDESTRIAN BRIDGE

Sheet Title: BEARING DETAILS

MADISON INTERNATIONAL OF MICHIGAN
Engineers, Architects, Planners
1420 Washington Blvd.
Detroit, Michigan 48226

DESIGN BY: K.C.H. / S.O.
DRAWN BY: K.C.H. / L.S.
CHECKED BY:
DATE:
PROJECT NO.: 8612
SHEET NO.: S-10

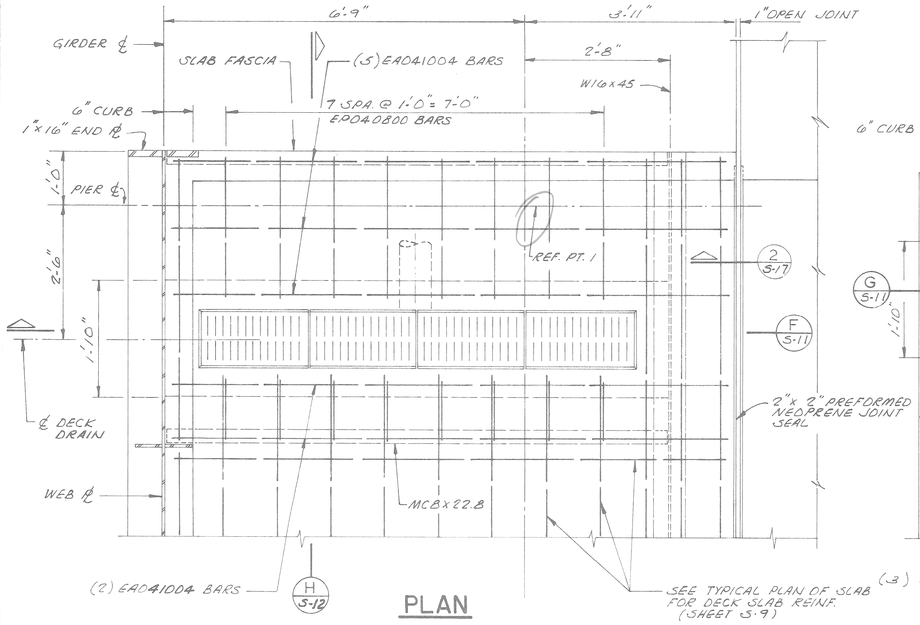

PLAN
PIER 1 DECK DRAIN

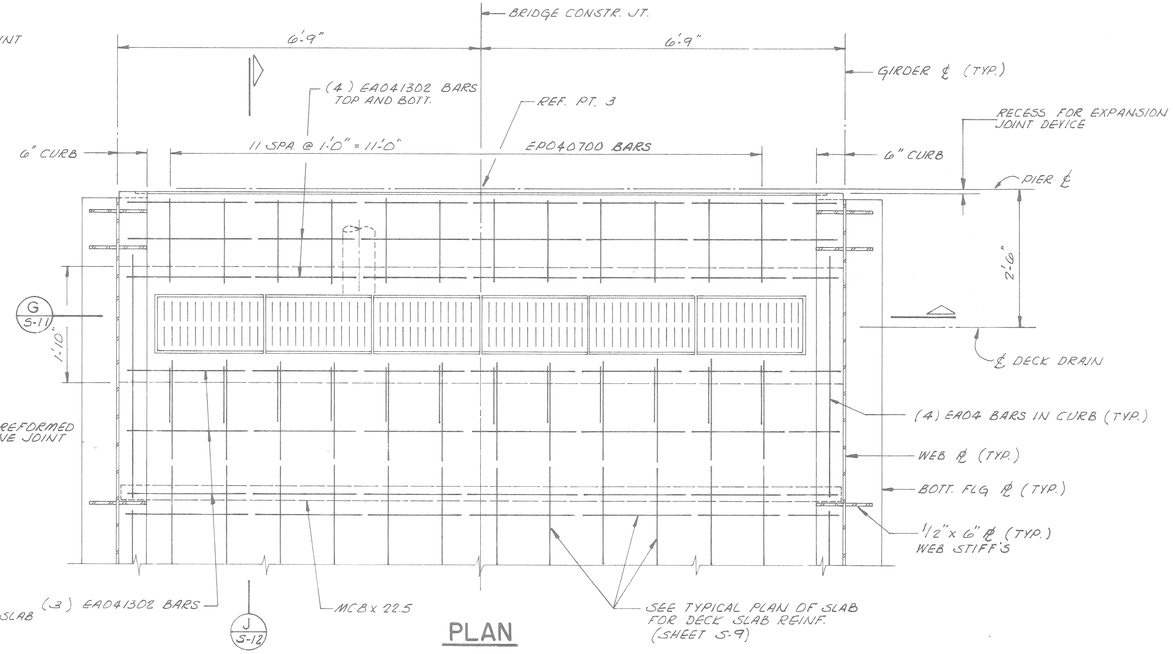

PLAN
PIER 3 DECK DRAIN

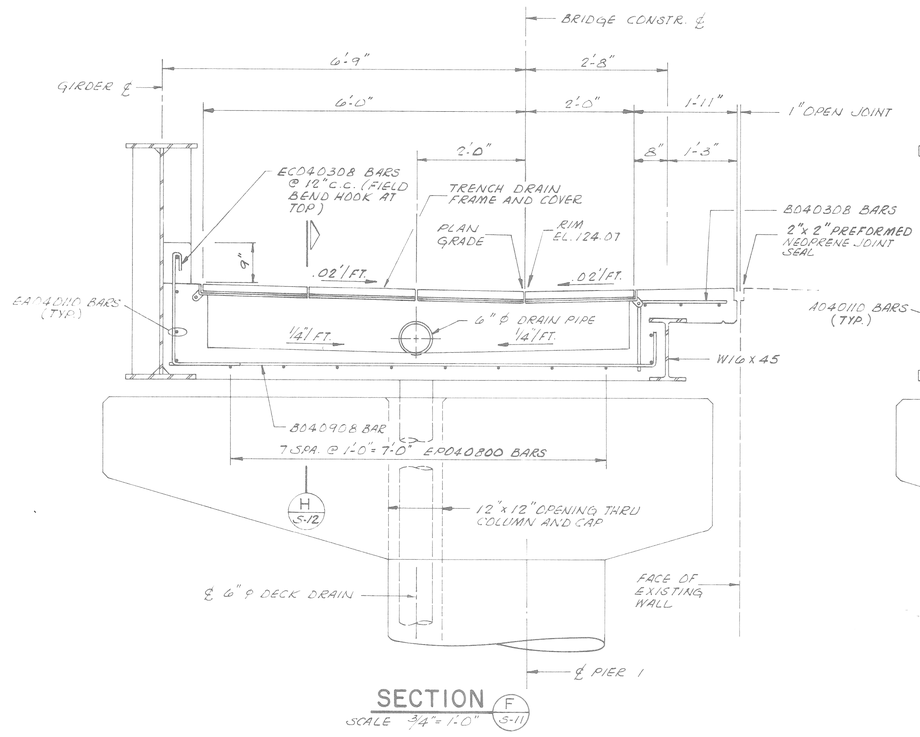

SECTION F S-11
SCALE 3/4" = 1'-0"

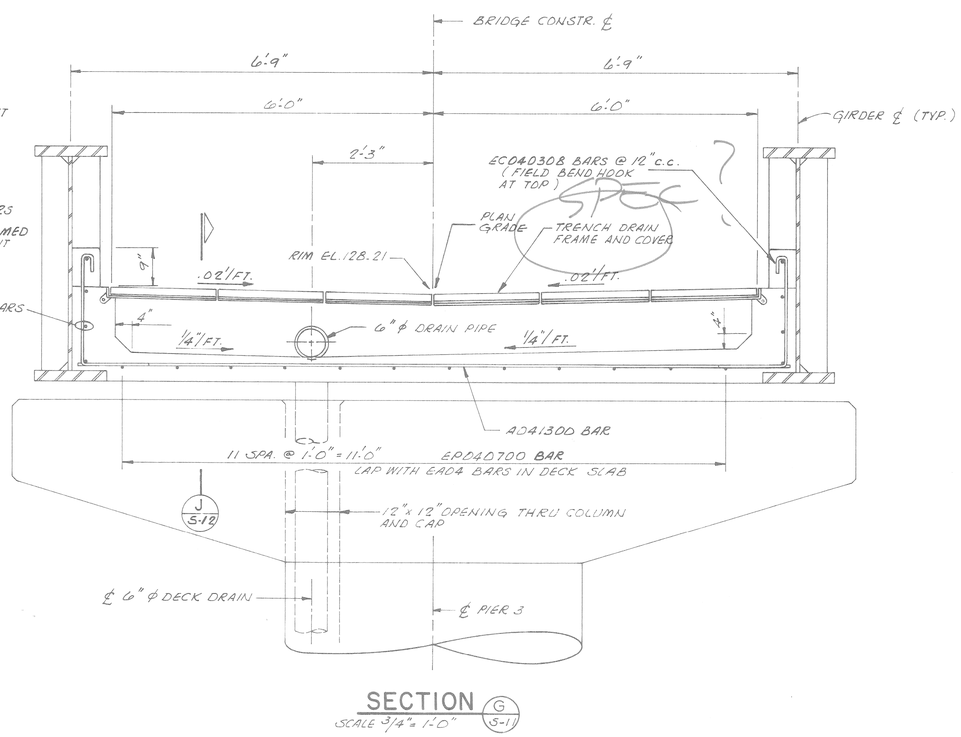

SECTION G S-11
SCALE 3/4" = 1'-0"

Project: RANDOLPH STREET PEDESTRIAN BRIDGE

Sheet Title: DECK DRAIN DETAILS

MADISON MADISON INTERNATIONAL OF MICHIGAN
Engineers, Architects, Planners
14420 Washington Blvd.
Detroit, Michigan 48226

DESIGN BY	KCH/SO.
DRAWN BY	C.V.B.
CHECKED BY	
DATE	
PROJECT NO.	8612
SHEET NO.	S-11

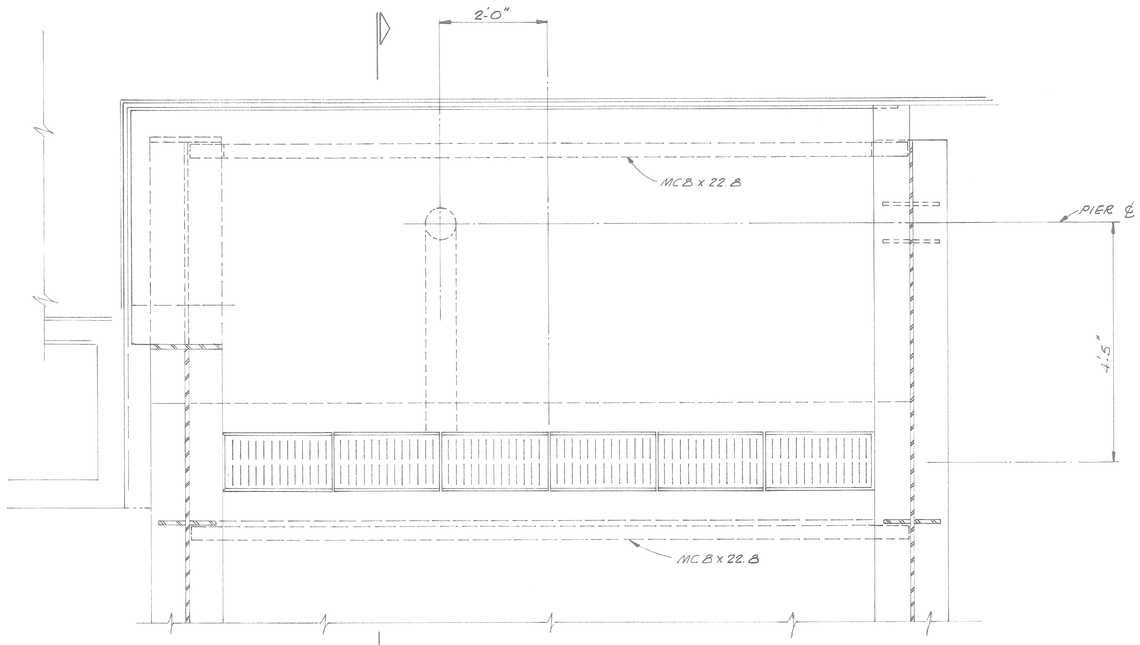

K S-12

PLAN
PIER 4 DECK DRAIN

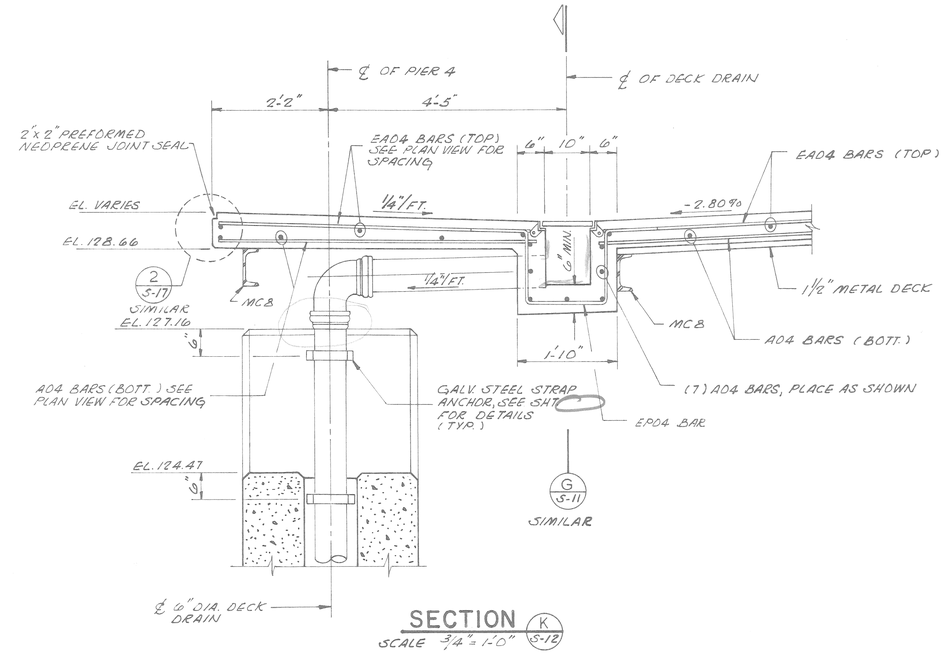

SECTION K S-12
SCALE 3/4" = 1'-0"

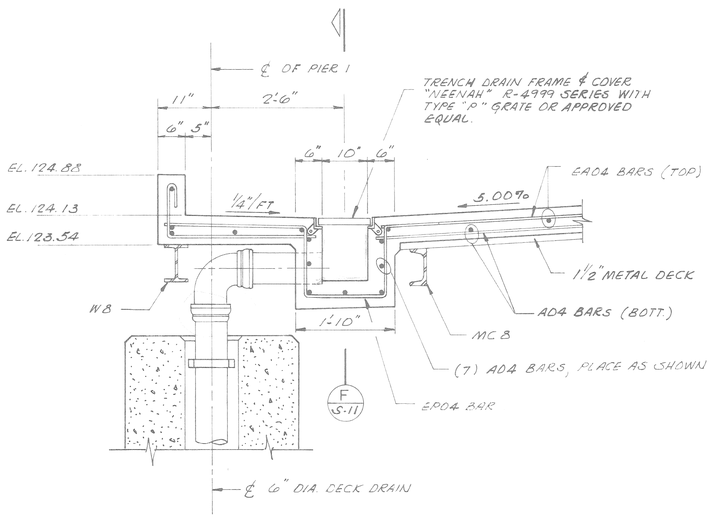

SECTION H S-11
SCALE 3/4" = 1'-0"

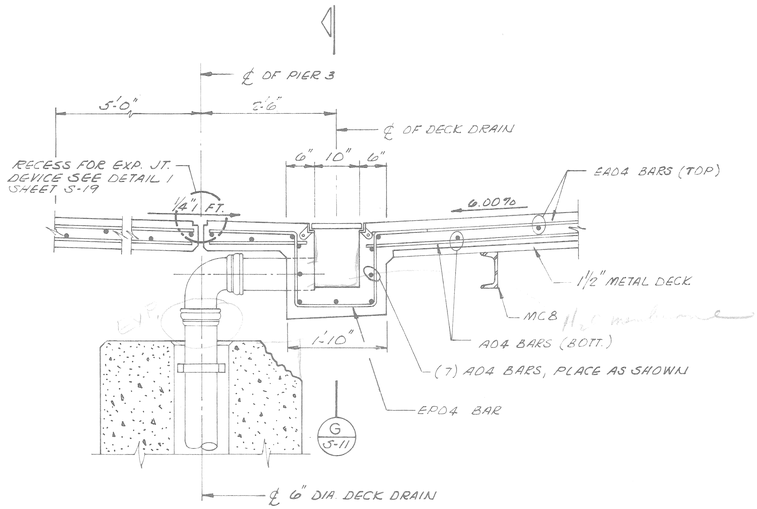

SECTION J S-11
SCALE 3/4" = 1'-0"

Project: RANDOLPH STREET PEDESTRIAN BRIDGE

Sheet Title: STRUCTURAL STEEL DETAILS

MADISON INTERNATIONAL OF MICHIGAN
Engineers, Architects, Planners
1420 Washington Blvd.
Detroit, Michigan 48226

DESIGN BY: K.C.H. / S.O.
DRAWN BY: C.J.B.
CHECKED BY:
DATE:
PROJECT NO.: 8612
SHEET NO.: S-12

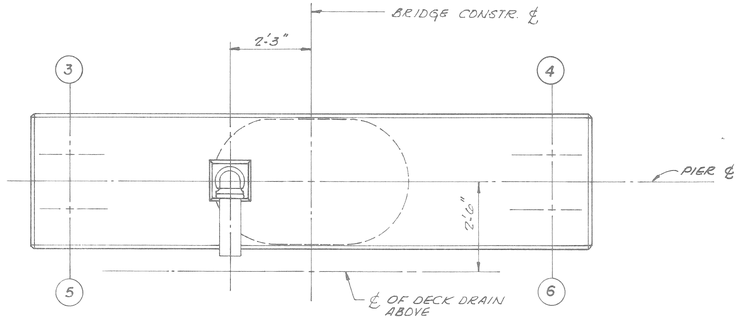

PLAN ABOVE PIER CAP
SCALE 1/2"=1'-0"

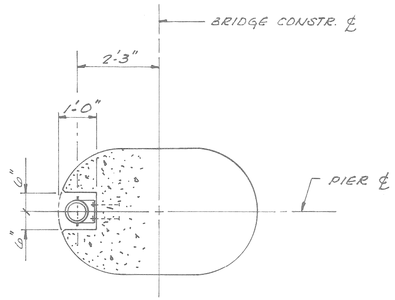

PLAN SECTION THRU COLUMN
SCALE 1/2"=1'-0"

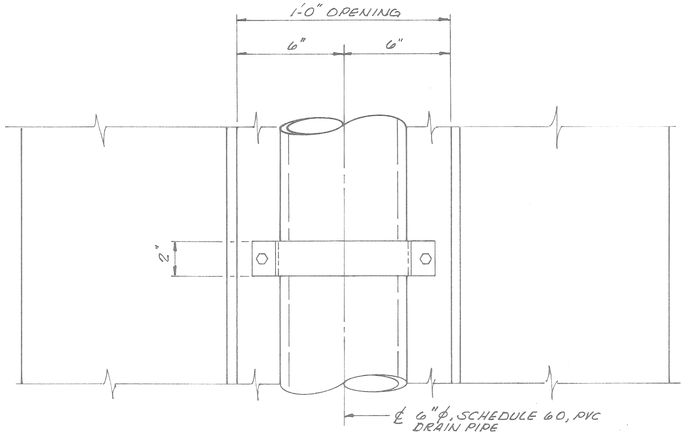

DETAIL 1 / S-13
SCALE 3"=1'-0"

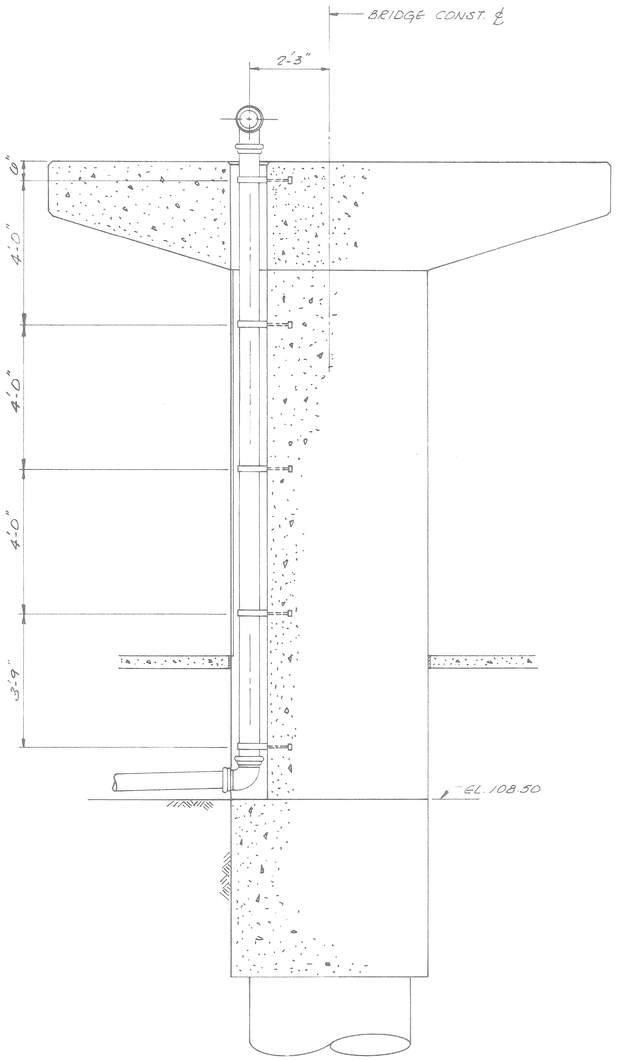

SECTION THRU COLUMN & CAP
SCALE 1/2"=1'-0"

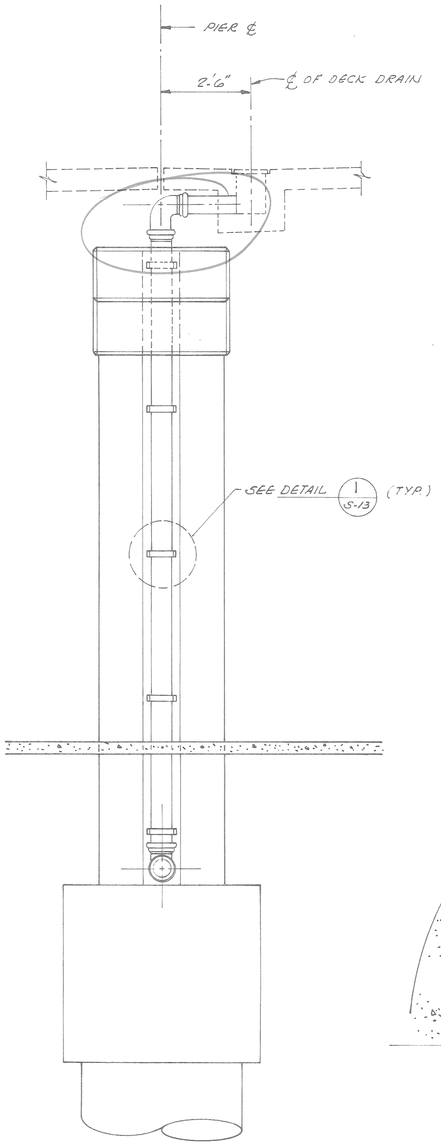

END ELEVATION
SCALE 1/2"=1'-0"

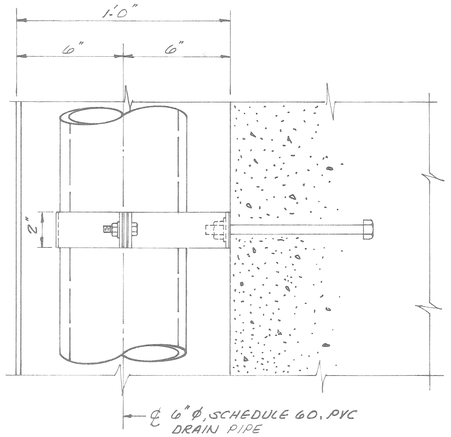

SECTION A / S-13
SCALE 3"=1'-0"

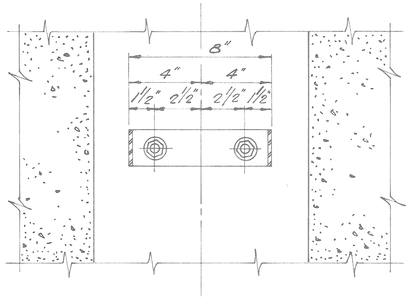

SECTION B / S-13
SCALE 3"=1'-0"

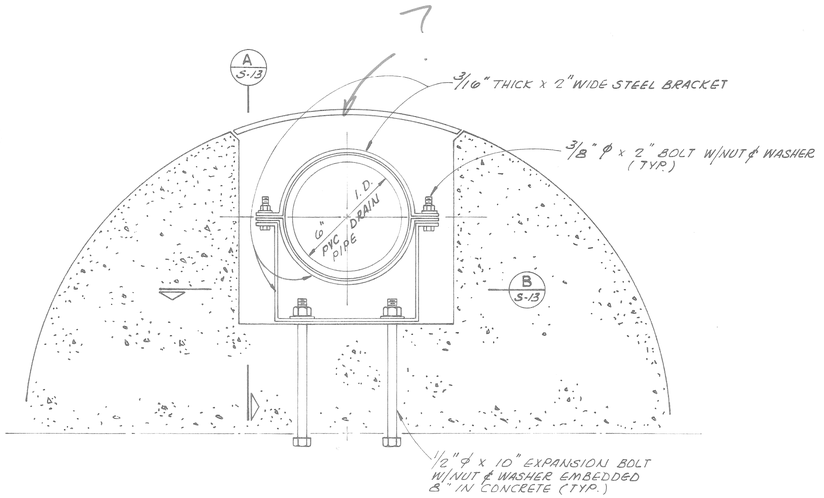

DECK DRAIN ANCHORAGE DETAIL
SCALE 3"=1'-0"

Project: RANDOLPH STREET PEDESTRIAN BRIDGE

Sheet Title: DECK DRAIN DETAILS

MADISON INTERNATIONAL OF MICHIGAN
Engineers, Architects, Planners
1420 Washington Blvd.
Detroit, Michigan 48226

DESIGN BY: K.C.H. / S.O.
DRAWN BY: C.J.B.
CHECKED BY:
DATE:
PROJECT No. 8612
SHEET No. S-13

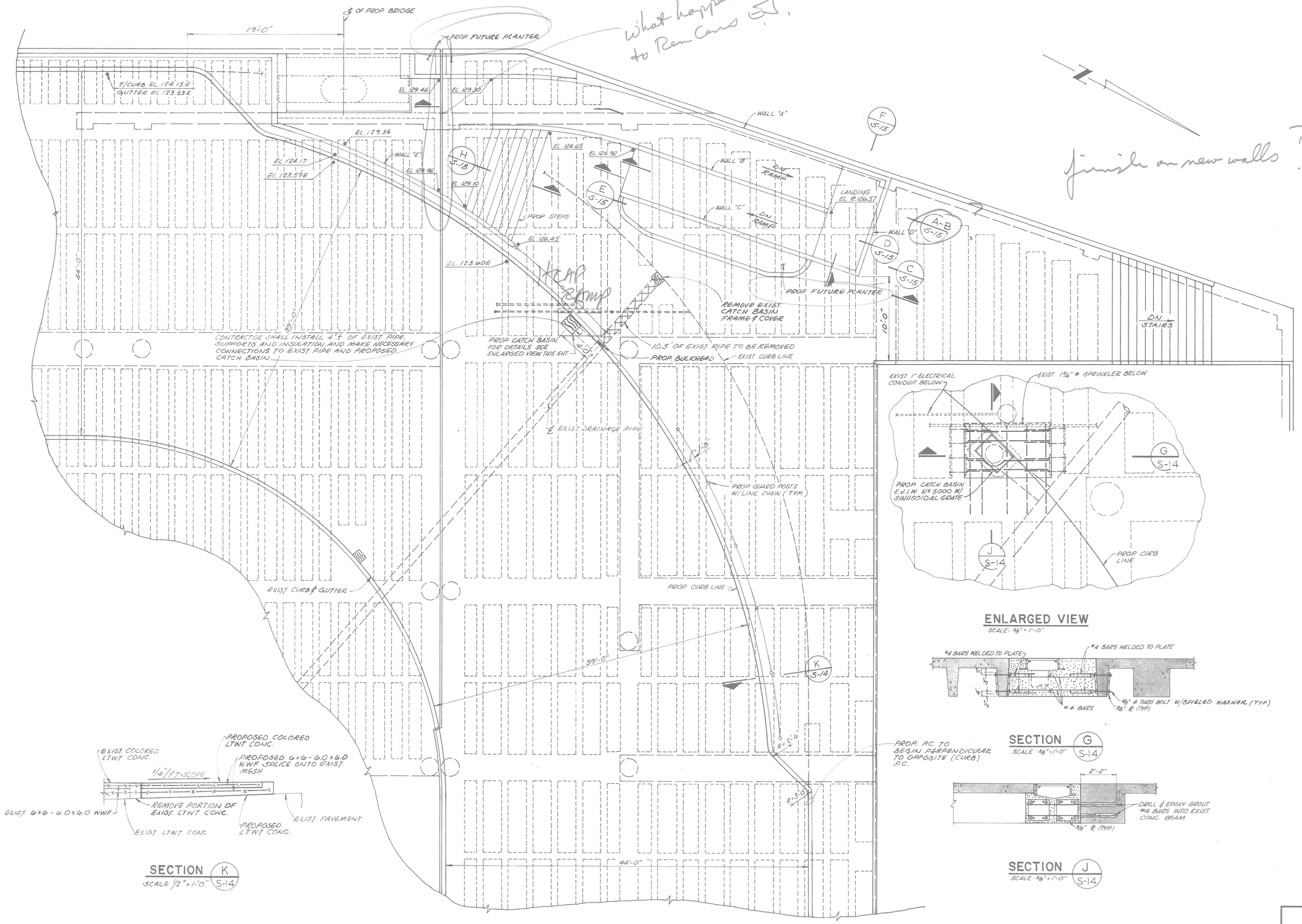

RENAISSANCE PLAZA RECONSTRUCTION PLAN

SCALE 3/16" = 1'-0"

Project: RANDOLPH STREET PEDESTRIAN BRIDGE

Sheet Title: RENAISSANCE PLAZA RECONSTRUCTION DETAILS

MADISON MADISON INTERNATIONAL OF MICHIGAN
Engineers, Architects, Planners
1420 Washington Blvd.
Detroit, Michigan 48226

DESIGN BY	K.C.H / S.O.
DRAWN BY	L.S. / R.M.
CHECKED BY	
DATE	
PROJECT NO.	8612
SHEET NO.	S-14

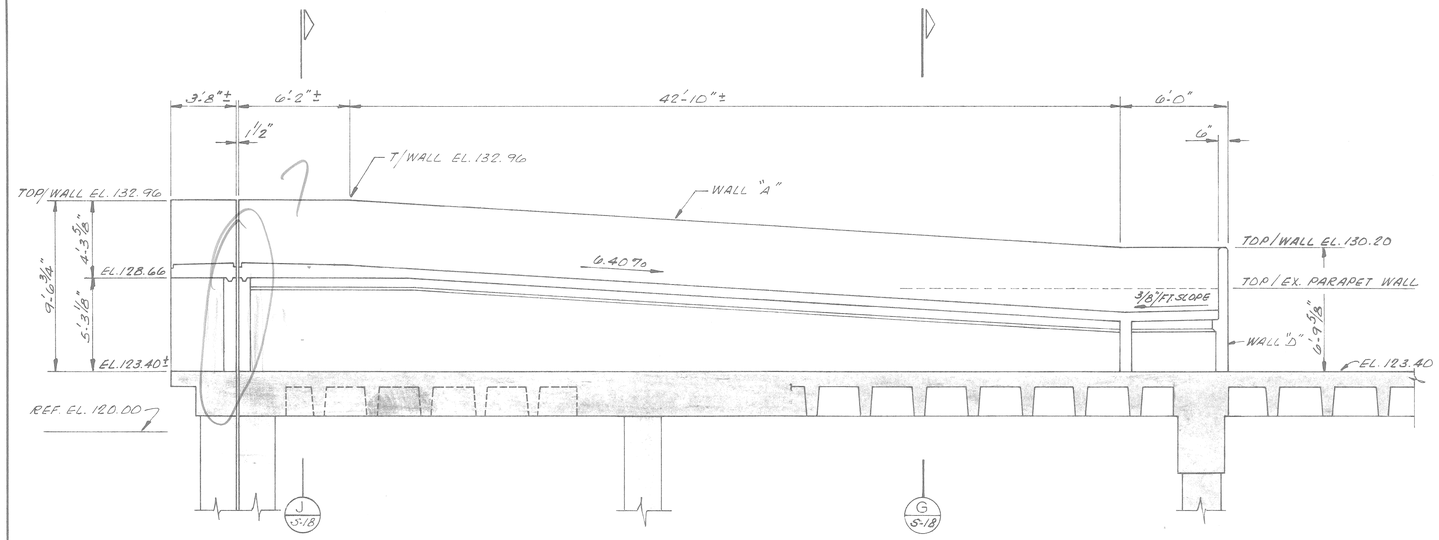

SECTION (A)
SCALE 1/4" = 1'-0" (S-14)

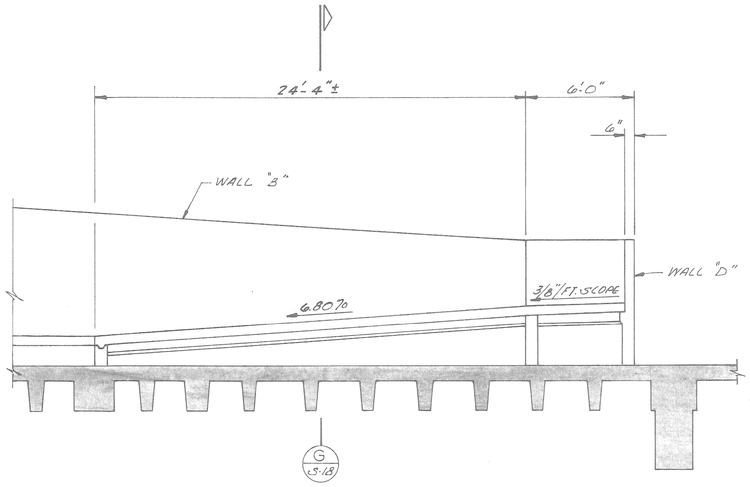

SECTION (D)
SCALE 1/4" = 1'-0" (S-14)

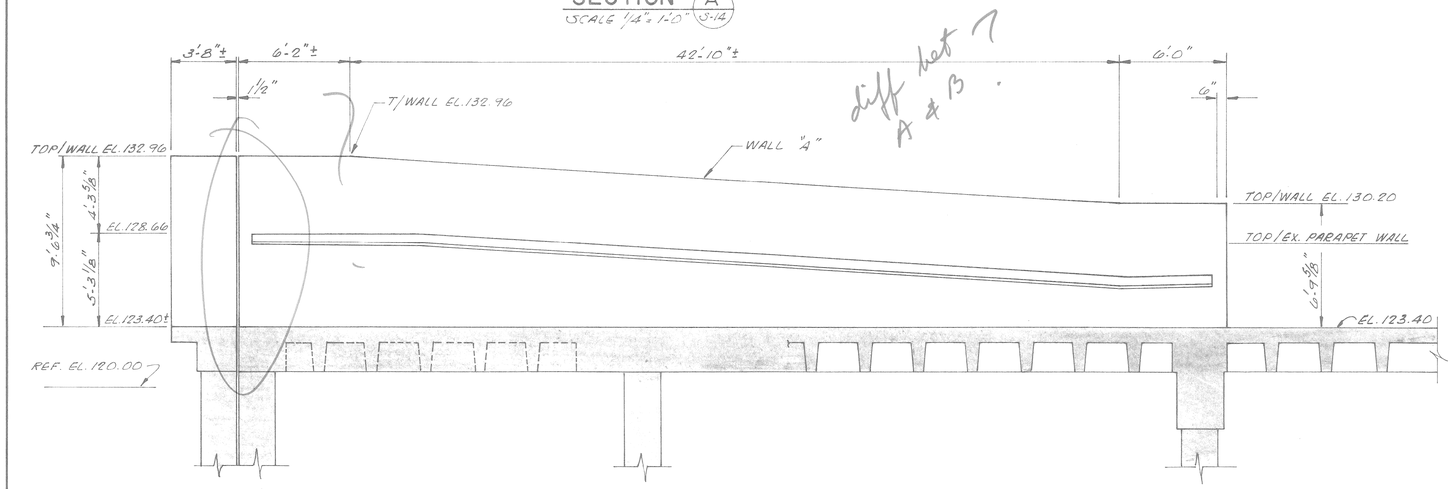

diff hat ?
A & B.

SECTION (B)
SCALE 1/4" = 1'-0" (S-14)

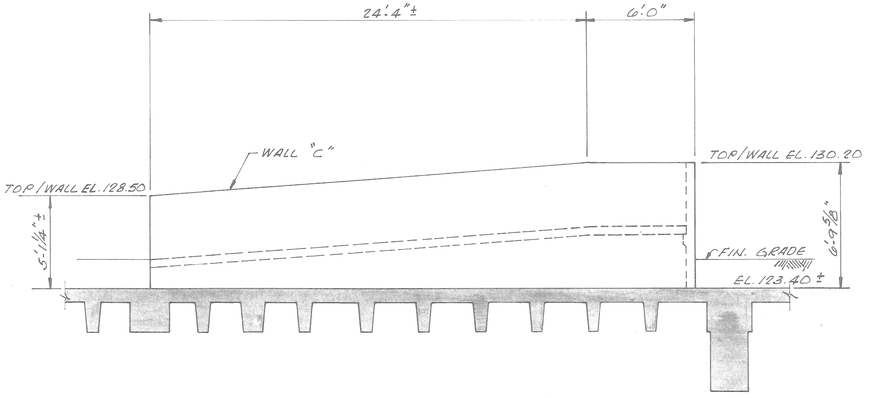

SECTION (E)
SCALE 1/4" = 1'-0" (S-14)

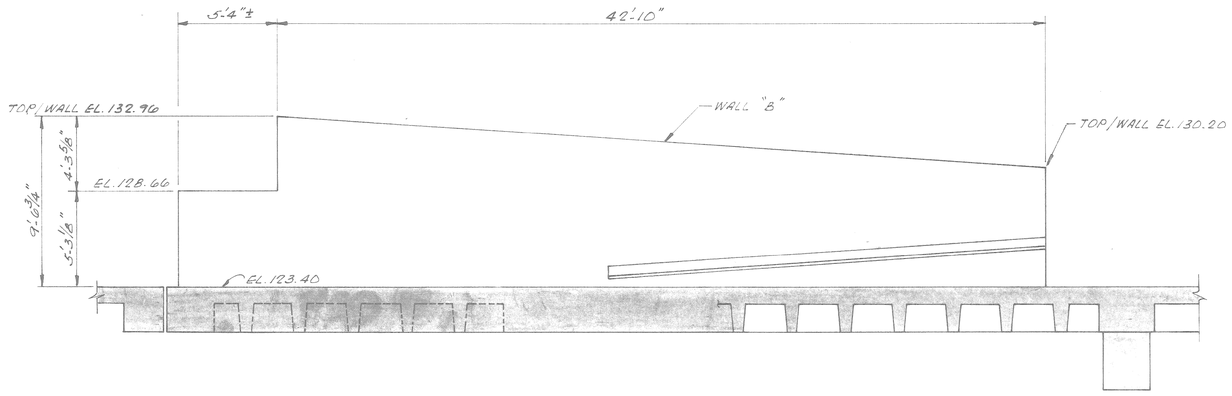

SECTION (C)
SCALE 1/4" = 1'-0" (S-14)

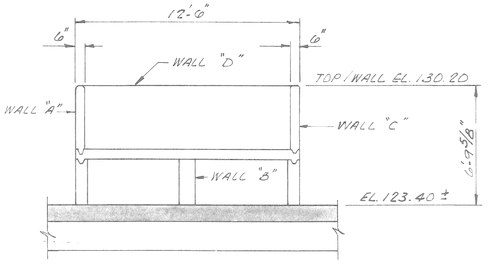

SECTION (F)
SCALE 1/4" = 1'-0" (S-14)

Project: RANDOLPH STREET PEDESTRIAN BRIDGE

Sheet Title: RENAISSANCE PLAZA RECONSTRUCTION DETAILS

MADISON MADISON INTERNATIONAL OF MICHIGAN
Engineers, Architects, Planners
1420 Washington Blvd.
Detroit, Michigan 48226

DESIGN BY	K.C.H. / S.O.
DRAWN BY	C.J.B.
CHECKED BY	
DATE	
PROJECT NO.	8612
SHEET NO.	S-15

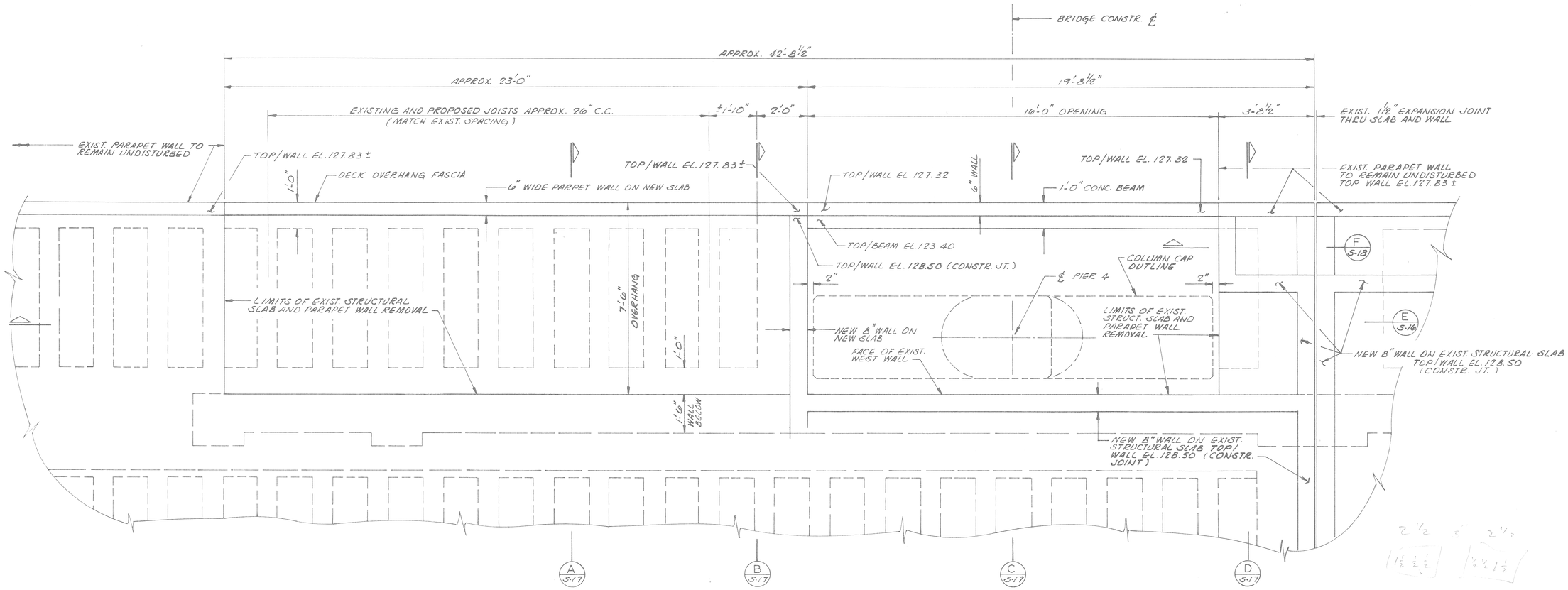

SECTION PLAN AT EL. 128.50

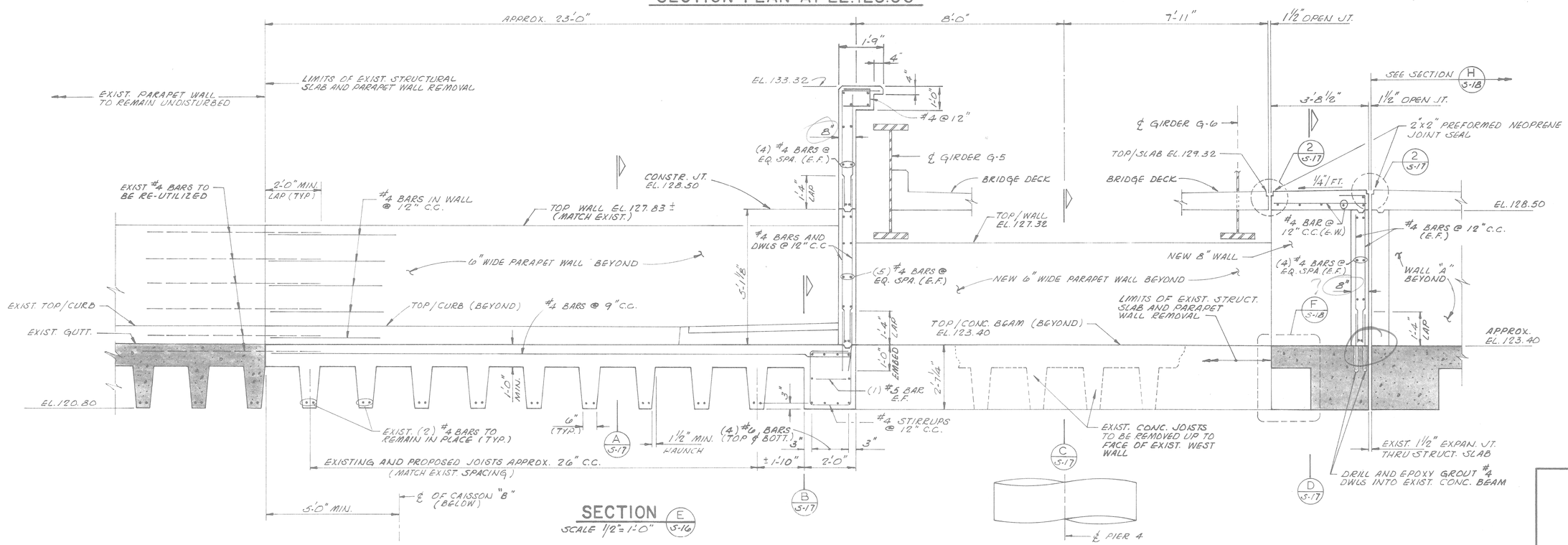

SECTION E S-16

SCALE 1/2" = 1'-0"

Project: RANDOLPH STREET PEDESTRIAN BRIDGE

Sheet Title: RENAISSANCE PLAZA RECONSTRUCTION DETAILS

MADISON INTERNATIONAL OF MICHIGAN
Engineers, Architects, Planners
1420 Washington Blvd.
Detroit, Michigan 48226

DESIGN BY: K.C.H./S.O.
DRAWN BY: C.J.B.
CHECKED BY:
DATE:
PROJECT NO.: 8612
SHEET NO.: S-16

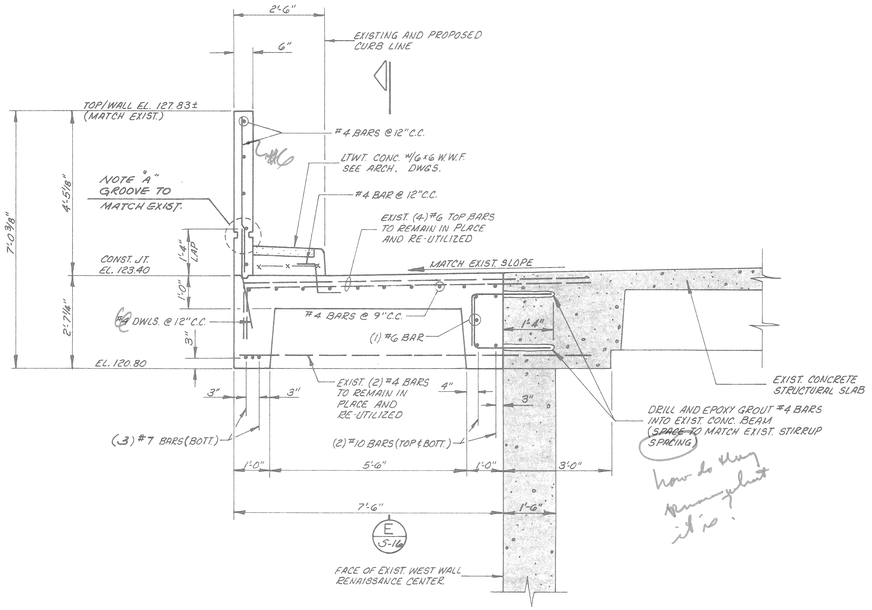

how do they measure that it is.

SECTION A S-16a
SCALE: 1/2" = 1'-0"

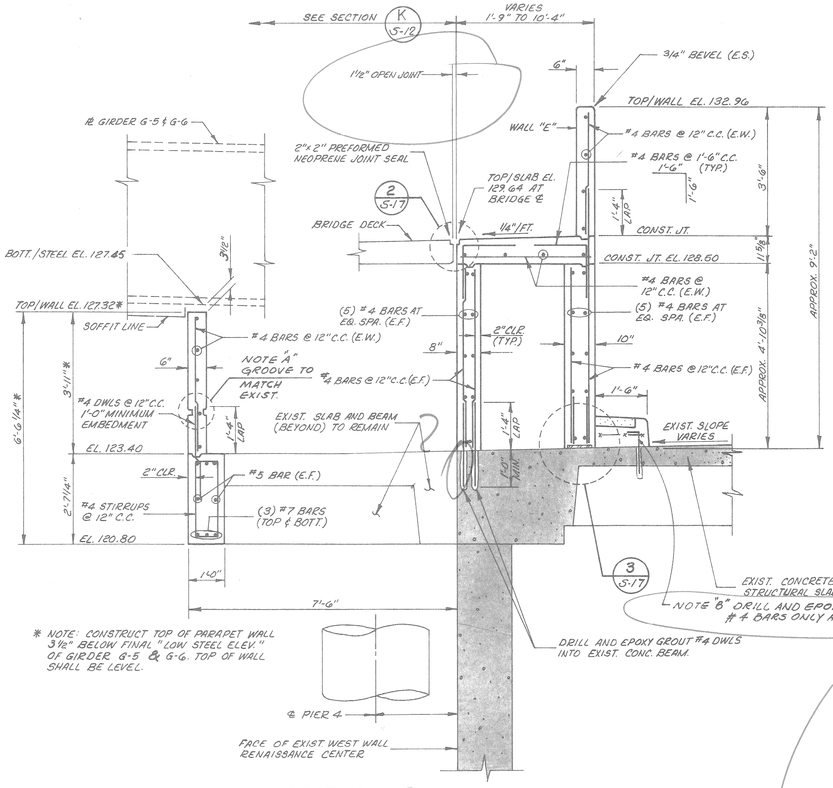

* NOTE: CONSTRUCT TOP OF PARAPET WALL 3 1/2" BELOW FINAL "LOW STEEL ELEV." OF GIRDER G-5 & G-6. TOP OF WALL SHALL BE LEVEL.

SECTION C S-16a
SCALE: 1/2" = 1'-0"

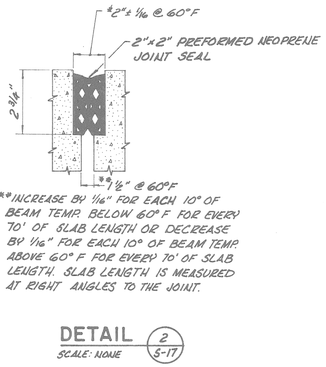

**INCREASE BY 1/16" FOR EACH 10° OF BEAM TEMP. BELOW 60° F FOR EVERY 70' OF SLAB LENGTH OR DECREASE BY 1/16" FOR EACH 10° OF BEAM TEMP. ABOVE 60° F FOR EVERY 70' OF SLAB LENGTH. SLAB LENGTH IS MEASURED AT RIGHT ANGLES TO THE JOINT.

DETAIL 2 S-17
SCALE: NONE

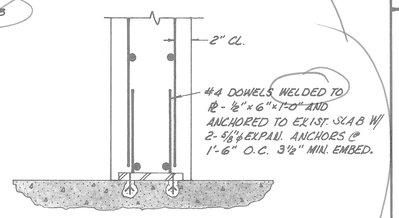

DETAIL 3 S-17 LOCATE APPROX. @ MID POINT BETWEEN JOISTS
SCALE: 1 1/2" = 1'-0"

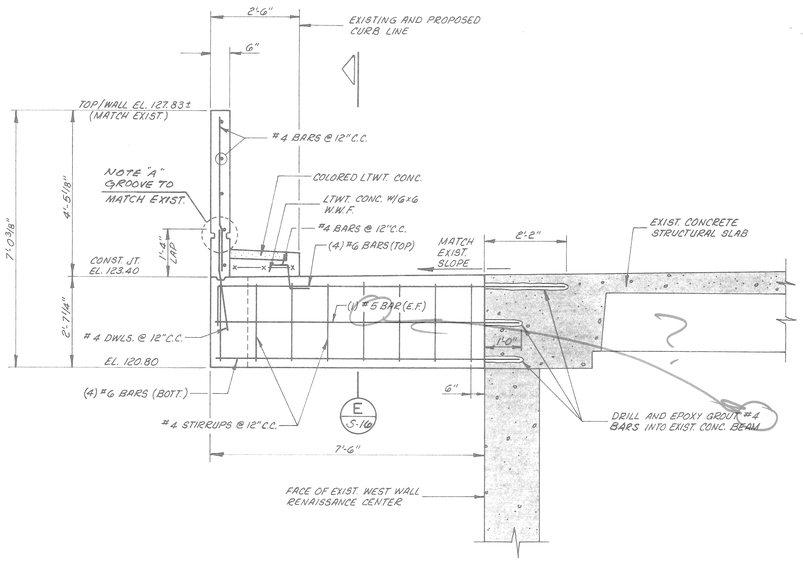

SECTION B S-16a
SCALE: 1/2" = 1'-0"

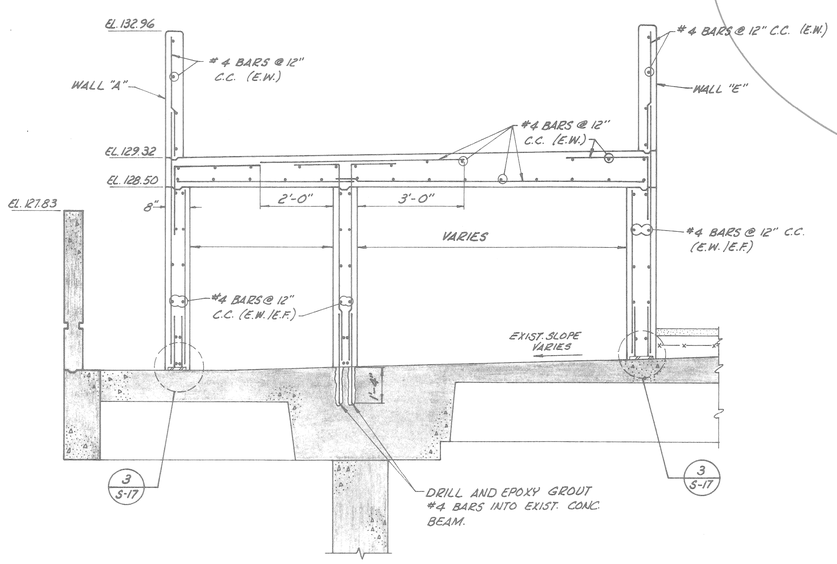

SECTION D S-16a
SCALE: 1/2" = 1'-0"

Project: RANDOLPH STREET PEDESTRIAN BRIDGE

Sheet Title: RENAISSANCE PLAZA RECONSTRUCTION DETAILS

MADISON MADISON INTERNATIONAL OF MICHIGAN
Engineers, Architects, Planners
1420 Washington Blvd.
Detroit, Michigan 48226

DESIGN BY	K.C.H. / S.O.
DRAWN BY	K.C.H. / L.S.
CHECKED BY	
DATE	
PROJECT NO.	8612
SHEET NO.	S-17

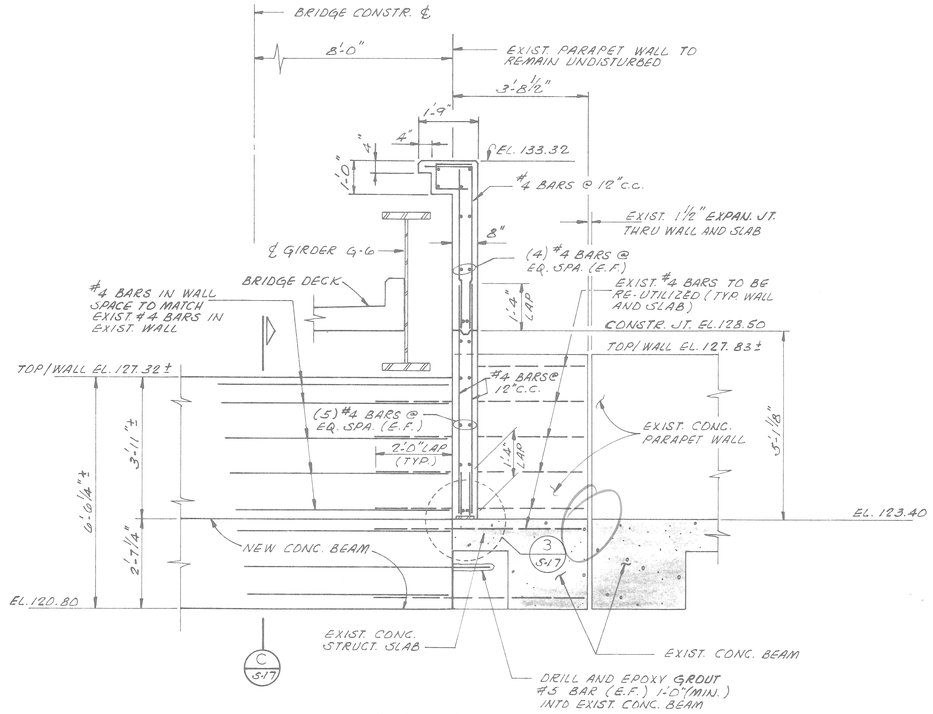

SECTION F S-16
SCALE 1/2" = 1'-0"

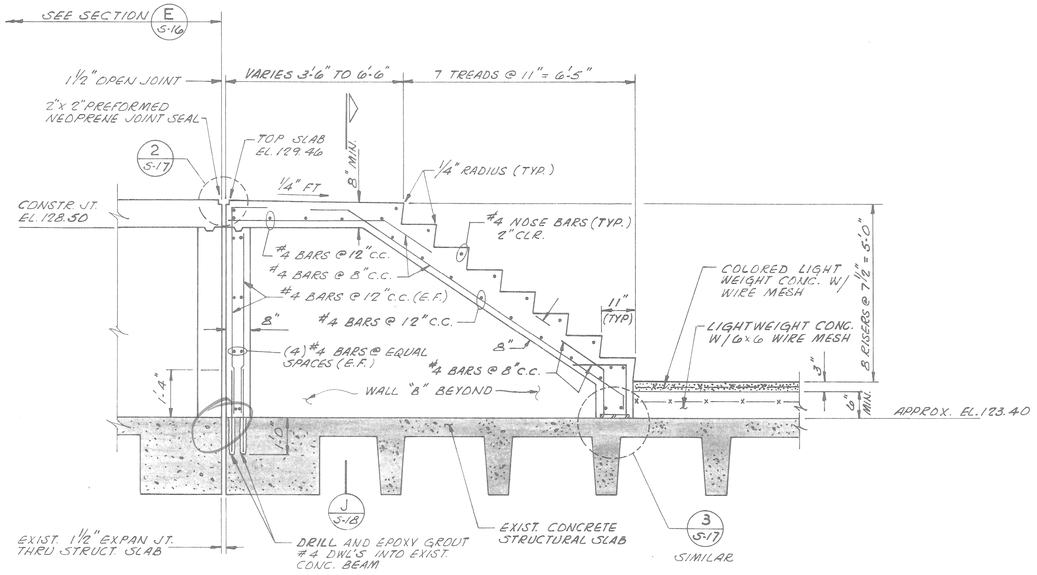

SECTION H S-16
SCALE 1/2" = 1'-0"

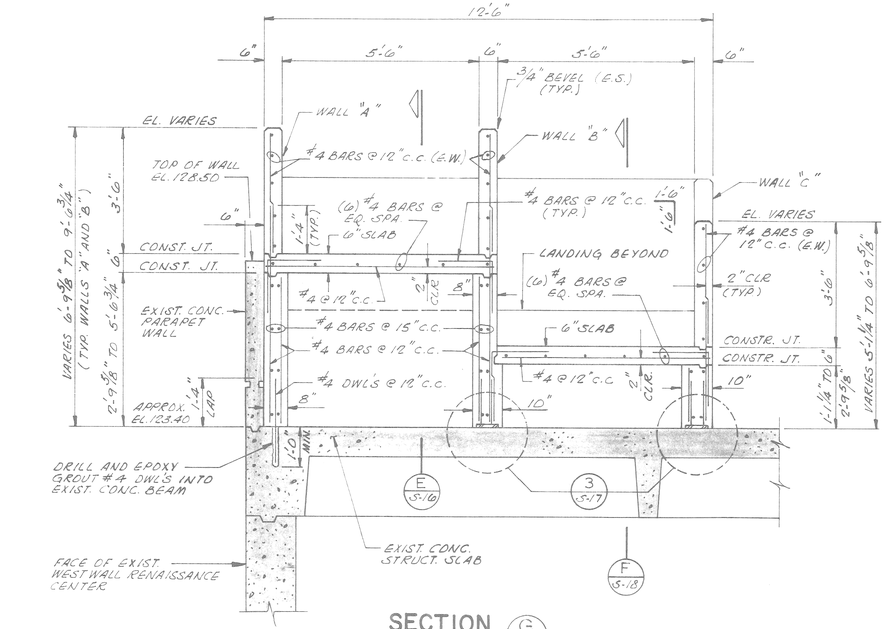

SECTION G S-14
SCALE 1/2" = 1'-0"

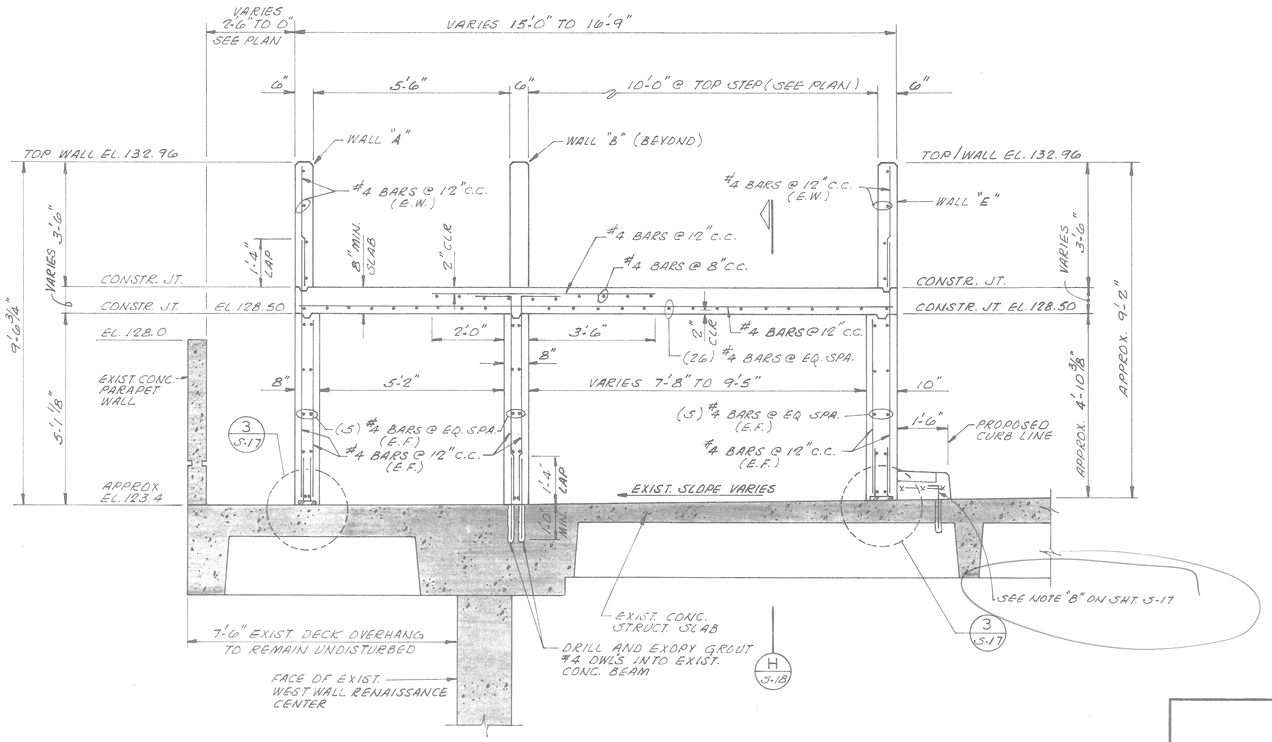

SECTION J S-18
SCALE 1/2" = 1'-0"

Project: RANDOLPH STREET PEDESTRIAN BRIDGE

Sheet Title: RENAISSANCE PLAZA RECONSTRUCTION DETAILS

MADISON MADISON INTERNATIONAL OF MICHIGAN
Engineers, Architects, Planners
1420 Washington Blvd.
Detroit, Michigan 48226

DESIGN BY: K.C.H. / S.D.
DRAWN BY: C.J.B.
CHECKED BY:
DATE:
PROJECT NO. 8612
SHEET NO. S-18

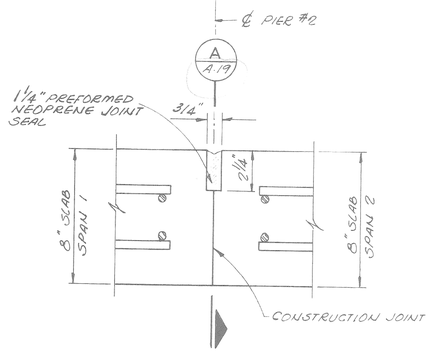

TRANSVERSE SLAB CONSTR. JOINT PIER 2

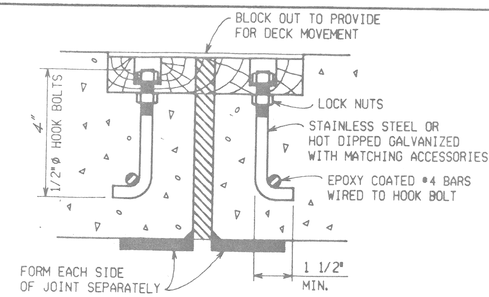

DETAIL FOR ANCHORAGE CAST IN PLACE

MANUFACTURER IS TO FURNISH BOLTS, NUTS, WASHERS, #4 BARS, AND TIES.

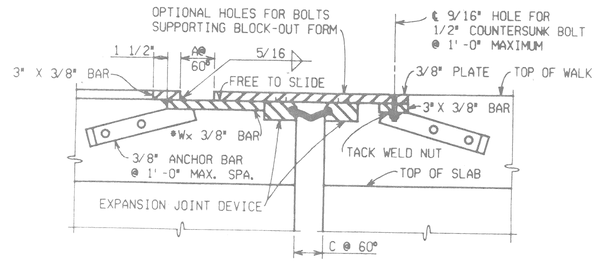

DETAIL 1 S-19 @ PIER #3

SCALE 1½" = 1'-0"

*W = 2A + 1 1/2"

A = $\frac{\text{TOTAL TRAVEL}}{2}$ + 1/2"

C = SEE MANUFACTURER'S DETAILS FOR DEVICE USED

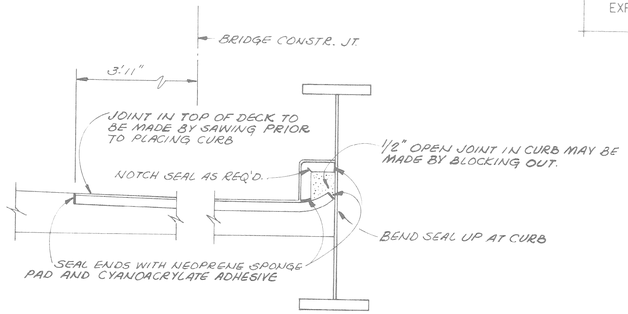

SECTION A A-19

SCALE 3" = 1'-0"

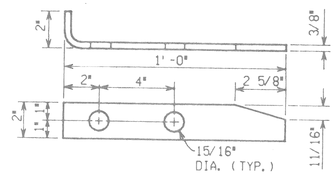

ANCHOR BAR

NOTES:

JOINT TYPES

THE EXPANSION JOINT DEVICE SHALL BE OF A TYPE THAT INCLUDES A CONTINUOUS NEOPRENE (OR EQUIVALENT) SEAL ACROSS THE DECK. UNLESS OTHERWISE NOTED ON THE PLANS, THE CONTRACTOR HAS THE OPTION OF USING ANY OF THE DEVICES LISTED BELOW:

DEVICE	MANUFACTURER
WATSON-BOWMAN STRIP SEAL, ELASTOFLEX	WATSON-BOWMAN & ACME, INC.
ONFLEX (ELASTOMERIC SIDE PANELS)	STRUCTURAL ACCESSORIES, INC.
PRO-SPAN, FEL-SPAN CS AND MULTIFOLD	FEL-PRO, INC.
GEN-STRIP	GENERAL TIRE
STEELFLEX-RS	D. S. BROWN

THE MODEL OF THE JOINT TYPE SELECTED SHALL BE SUITABLE TO ACCOMMODATE THE TOTAL MOVEMENT NOTED ON THE PLANS.

COMPLETE WORKING DRAWINGS OF ALL DETAILS OF FABRICATION OF THE EXPANSION JOINT DEVICE SHALL BE SUBMITTED FOR REVIEW IN ACCORDANCE WITH STANDARD SPECIFICATION 1.05.02. THIS REQUIREMENT IS WAIVED FOR EXPANSION JOINT DEVICES FOR WHICH A SET OF STANDARD INSTALLATION DETAILS HAS BEEN APPROVED. STANDARD INSTALLATION DETAILS CAN BE OBTAINED FROM THE DESIGN DIVISION.

FABRICATION AND INSTALLATION

THE EXPANSION JOINT SHALL BE SHOP FABRICATED TO CONFORM TO THE CONTOUR OF THE BRIDGE DECK, BARRIERS, ETC. IT SHALL BE INSTALLED IN ACCORDANCE WITH MANUFACTURER'S RECOMMENDATIONS SUBJECT TO NOTES HEREIN AND THE APPROVAL OF THE ENGINEER.

THE PRO-SPAN DEVICE MUST INCORPORATE A CAST-IN-PLACE METAL SEAT.

WHERE THE DEVICE IS TO BE INSTALLED ON CAST CONCRETE, THE SURFACE LAITANCE SHALL BE REMOVED BY SANDBLASTING AND ANY VOIDS FILLED WITH EPOXY MORTAR PRIOR TO BEDDING.

THE AREA OF THE HOLD-DOWN DEVICE AND SEALING GLAND WHICH WILL BE IN CONTACT WITH A SEALANT, BEDDING COMPOUND, OR LUBRICANT-ADHESIVE SHALL BE CLEANED WITH TOLUENE OR OTHER APPROVED SOLVENT.

A BEDDING COMPOUND SHALL BE USED BETWEEN THE SEAT AND THE ANCHORED PORTION OF THE SEALING GLAND, OR BETWEEN THE SEAT AND HOLD-DOWN DEVICE. THE BEDDING COMPOUND SHALL BE AN APPROVED EPOXY GROUT FURNISHED BY THE MANUFACTURER OF THE EXPANSION JOINT DEVICE.

WHERE THE SEALING GLAND IS LOCKED INTO A METAL EXTRUSION, A LUBRICANT-ADHESIVE CONFORMING TO STANDARD SPECIFICATION 8.16.04-d SHALL BE REQUIRED BETWEEN THE SEAL AND METAL EXTRUSION.

ALL CONTINUOUS BOLT WELL CAVITIES IN THE HOLD-DOWN DEVICES SHALL BE FILLED WITH AN EPOXY MORTAR. ALL NON-CONTINUOUS BOLT WELL CAVITIES SHALL BE FILLED WITH AN APPROVED FLEXIBLE EPOXY OR A SEALANT CONFORMING TO FEDERAL SPECIFICATION TT-S-00230C.

THE VOID FORMED BETWEEN THE VERTICAL EDGE OF THE HOLD-DOWN DEVICE AND THE BLOCK-OUT SHALL BE FILLED WITH A SEALANT IF LESS THAN 1/2 INCH IN WIDTH OR WITH AN EPOXY MORTAR IF GREATER THAN 1/2 INCH. THE SEALANT SHALL CONFORM TO FEDERAL SPECIFICATION TT-S-00230C OR SHALL BE AN APPROVED FLEXIBLE EPOXY.

THE EPOXY MORTAR USED TO REPAIR THE SEAT, TO FILL THE CONTINUOUS BOLT WELL CAVITIES, AND TO FILL THE VOID BETWEEN THE EDGE OF THE HOLD-DOWN DEVICE AND THE BLOCK-OUT SHALL BE MIXED AND PLACED IN ACCORDANCE WITH STANDARD SPECIFICATION 4.50.19-a, EXCEPT THE SAND SHALL BE LIMITED TO A MAXIMUM OF 2.5 PARTS, USING AN EPOXY BINDER MEETING THE REQUIREMENTS SPECIFIED IN STANDARD SPECIFICATION 8.16.05. ALL SURFACES IN CONTACT WITH THE EPOXY MORTAR SHALL BE LIGHTLY SANDBLASTED AND PRIMED WITH THE BINDER PRIOR TO PLACING THE MORTAR.

DETAILS AT CURBS OR BARRIERS

THE DETAILS ON THIS SHEET SHOW AN APPROVED MEANS OF TERMINATING THE EXPANSION JOINT DEVICE AT CURBS OR BARRIERS. VARIATIONS OR ALTERNATIVE SCHEMES WILL BE CONSIDERED AND MAY BE USED IF APPROVED BY THE ENGINEER.

MATERIALS

THE COST OF ALL MATERIALS AND LABOR REQUIRED FOR PROPER INSTALLATION OF THE EXPANSION JOINT AND THE TERMINAL ASSEMBLIES AT THE CURBS, SIDEWALKS, OR BARRIERS IS INCLUDED IN THE PAYMENT FOR THE EXPANSION JOINT DEVICE.

Project: RANDOLPH STREET PEDESTRIAN BRIDGE

Sheet Title: JOINT DETAILS

MADISON INTERNATIONAL OF MICHIGAN
Engineers, Architects, Planners
1420 Washington Blvd.
Detroit, Michigan 48226

DESIGN BY	K.C.H. / S.D.
DRAWN BY	C.J.B.
CHECKED BY	
DATE	
PROJECT NO.	8612
SHEET NO.	S-19