B.P.R. DIV. NO.	STATE	PROJECT NO.	FISCAL YEAR	SHEET NO.	TOTAL SHEETS
4	MICH.				
STREET	CITY	COUNTY	TWP	SHEET NO.	TOTAL SHEETS

CITY OF DETROIT
DEPARTMENT OF PUBLIC WORKS
IN CO-OPERATION WITH
MICHIGAN DEPARTMENT OF TRANSPORTATION
AND
FEDERAL HIGHWAY ADMINISTRATION

THE IMPROVEMENTS COVERED BY THESE PLANS SHALL BE DONE IN ACCORDANCE WITH THE MICHIGAN DEPARTMENT OF TRANSPORTATION CURRENT STANDARD SPECIFICATIONS AND SUPPLEMENTAL SPECIFICATIONS.

FEDERAL AID URBAN PROJECT NO. MICHIGAN M 2000 (112)

CONTROL SECTION MU 82400 JOB NO. 15031A

P08 OF 82111 & P01 OF 82-22-62

INDEX OF SHEETS

1	TITLE
2-33	ARCHITECTURAL
34-42	CIVIL
43-59	STRUCTURAL
60-64	MECHANICAL
65-71	ELECTRICAL
72-75	WATER
76-79	SCANDI
80-88	SIGNING
89-94	TRAFFIC
95-96	QUANTITES

STANDARD PLANS

I-9B	II-29B	II-28F
II-41D	II-49E	III-60E
IV-84B	V-98B	V-100A
V-112D	VI-124C	VI-125E

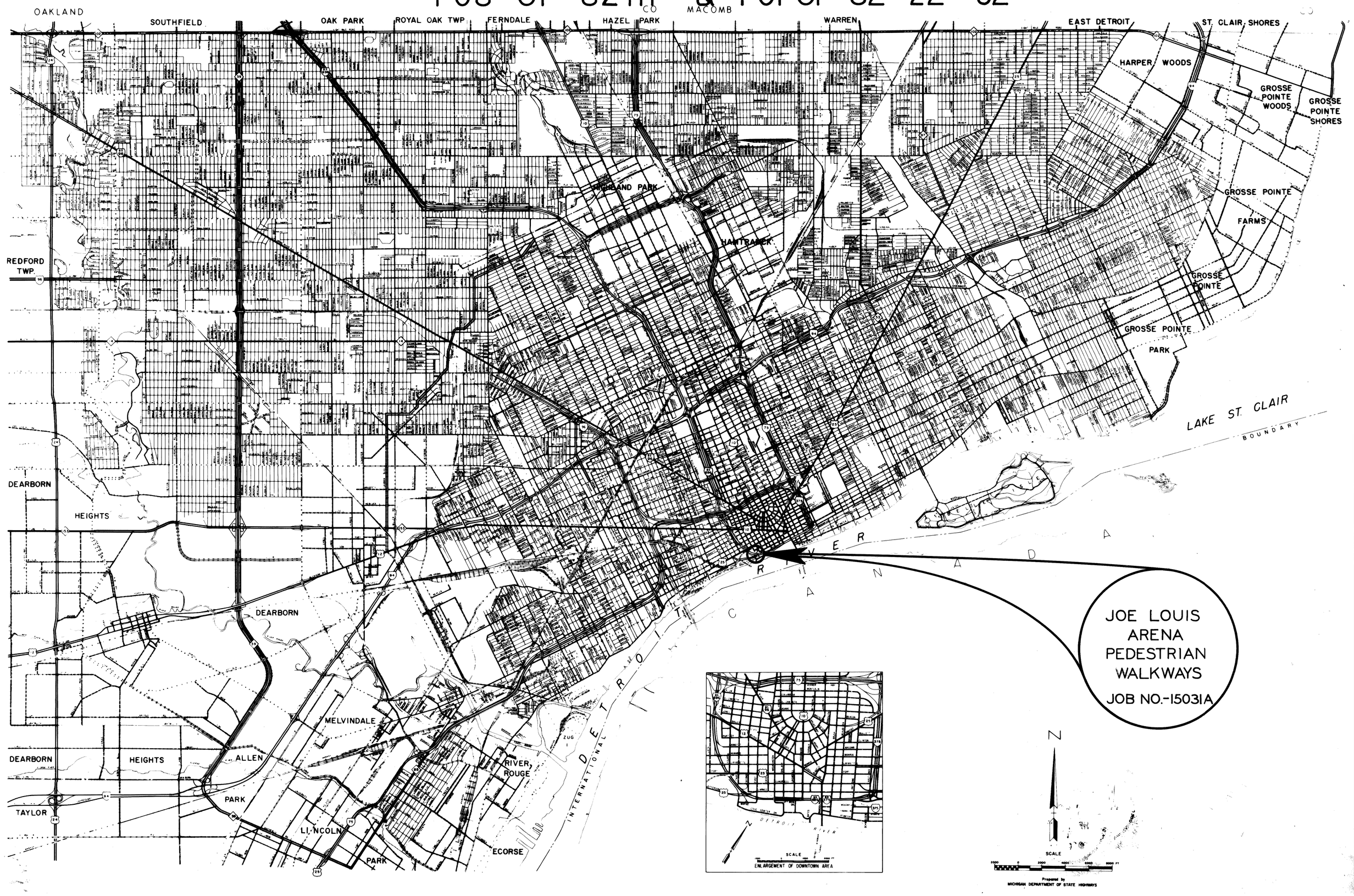

ITEM NO. 567

CONTRACT FOR PEDESTRIAN BRIDGE & MISC. WORK

LOCAL AUTHORITY APPROVAL
CITY OF DETROIT
CITY ENGINEERING DIVISION
DEPARTMENT OF PUBLIC WORKS

APPROVED BY _____ ASSISTANT CITY ENGINEER — DATE 7-14-80

APPROVED BY _____ CITY ENGINEER — DATE 7-14-80

PREPARED UNDER SUPERVISION OF

Jack J. Covert — REGISTERED PROFESSIONAL ENGINEER — 10900 REGISTRATION NO.

CITY OF DETROIT
ORGANIZATION

DETROIT, MICHIGAN
ADDRESS

STATE OF MICHIGAN — JACK J. COVERT — ENGINEER — NO. 10900 — SEAL — REGISTERED PROFESSIONAL ENGINEER

FILE NO. USE NO. 350 STENCIL	15031A	STATE PROJECT	FEDERAL PROJECT	SHEET NO. 1

1 OF 96

M2000(112) MU82400 Job 15031A Item 567 POB of 82111 & POI of 82-22-62

Original
7-16-80

MC/PRM# 71858

MATERIAL SYMBOLS

- ALUMINUM
- STEEL (MISC.)
- 2 HR SHAFT WALL OR STEEL SIDING/GYP BD ASSEMBLY
- 2HR FIRE RATED WALL W/ GYP BD & MET. STUDS
- CONCRETE
- GYP BD OR CEMENT PLASTER ON MET. STUD - NON RATED
- PLYWOOD
- WOOD BLOCKING, WOOD NAILER, WOOD FRAMING
- INSULATION
- GROUT, MORTAR, PLASTER, GYPSUM WALLBOARD
- SEALANT
- NEOPRENE
- STEEL (STRUCTURAL)
- GLASS (LARGE SCALE)

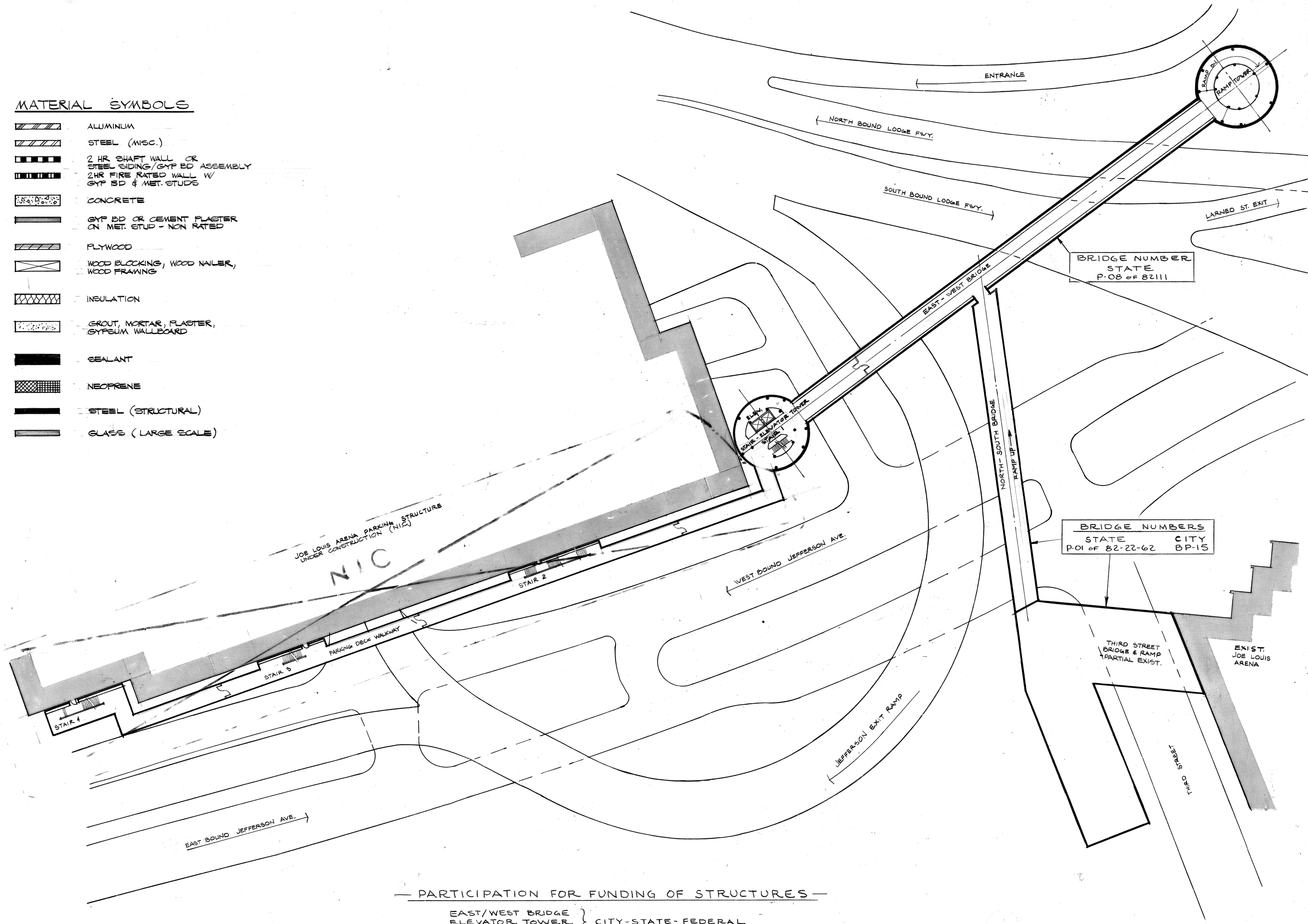

PARTICIPATION FOR FUNDING OF STRUCTURES

EAST/WEST BRIDGE
ELEVATOR TOWER
RAMP TOWER
} CITY-STATE-FEDERAL

NORTH/SOUTH BRIDGE
3 RD ST. BRIDGE COMPLETION
} CITY - FEDERAL

NOTE: ALL DETAIL REFERENCES ON SHTS A-1 THRU A-47 DO NOT HAVE THE SUBSCRIPT "A" BUT DO REFERENCE TO THE SHT NO. FOLLOWING THE "A"
EXAMPLE (1/12) ← DET 1 ← SHT A-12

CALLED NORTH

Joe Louis Sports Arena

Pedestrian Walkway

For City Engineering Division

SH&G
Smith, Hinchman & Grylls Associates, Inc.
Architects Engineers Planners
455 West Fort Street
Detroit, Michigan 48226
(313)964-3000
SH&G Job. No. 11732C

OWNER	5-30-80
Issued For	Date

1-18-80	K.B. D.S.
Date	Drawn By
Div. Architect/Engineer	
Correlation Check	
Project Manager	
Construction Administrative Div. Approval	
Division Approval	

Key Plan

Drawing Title
COMPOSITE PLAN

15031A
Project No.
A-1
Drawing No.
1/32" = 1'-0"
Scale

2 OF 96

9-26-79

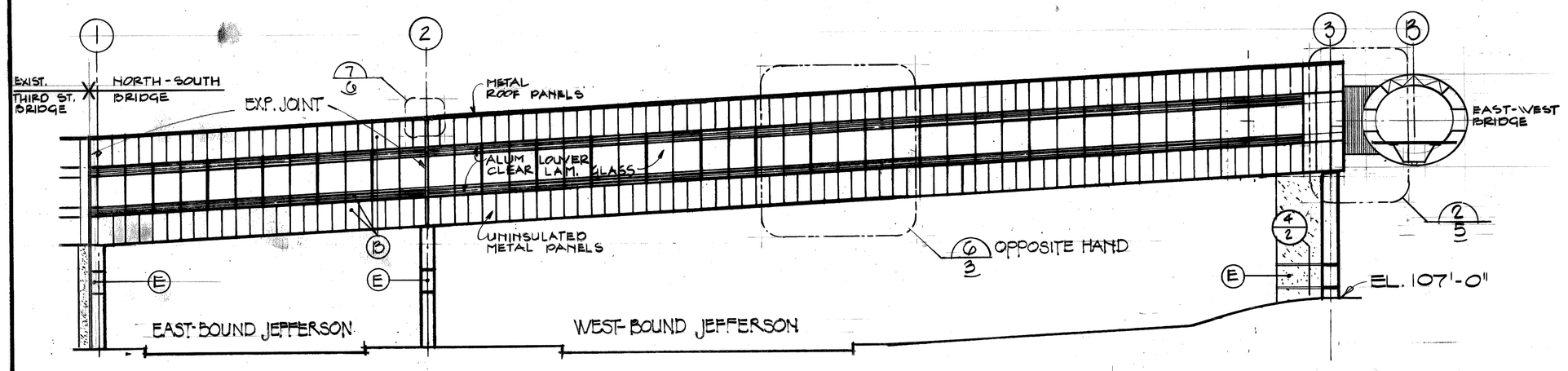

EAST ELEVATION
1/16" = 1'-0"

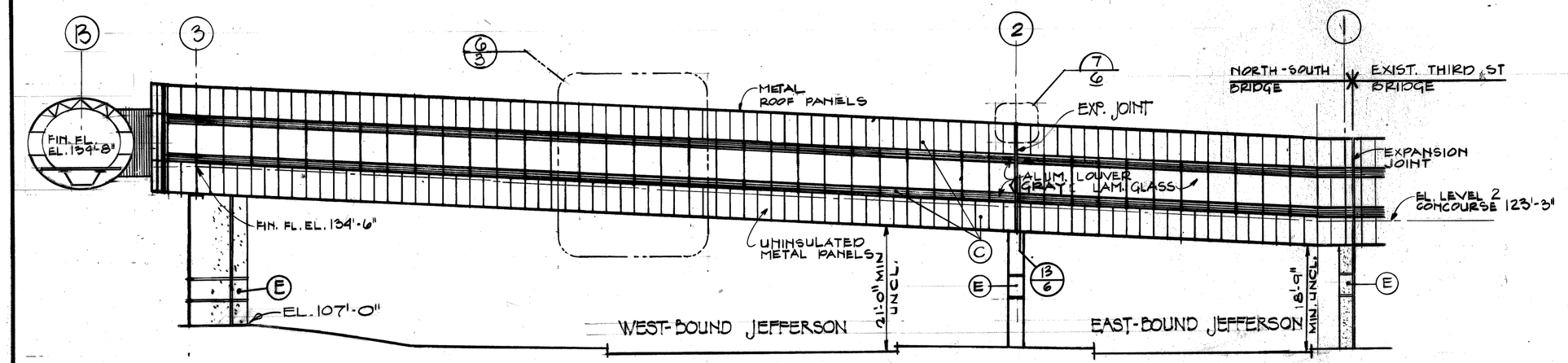

WEST ELEVATION
1/16" = 1'-0"

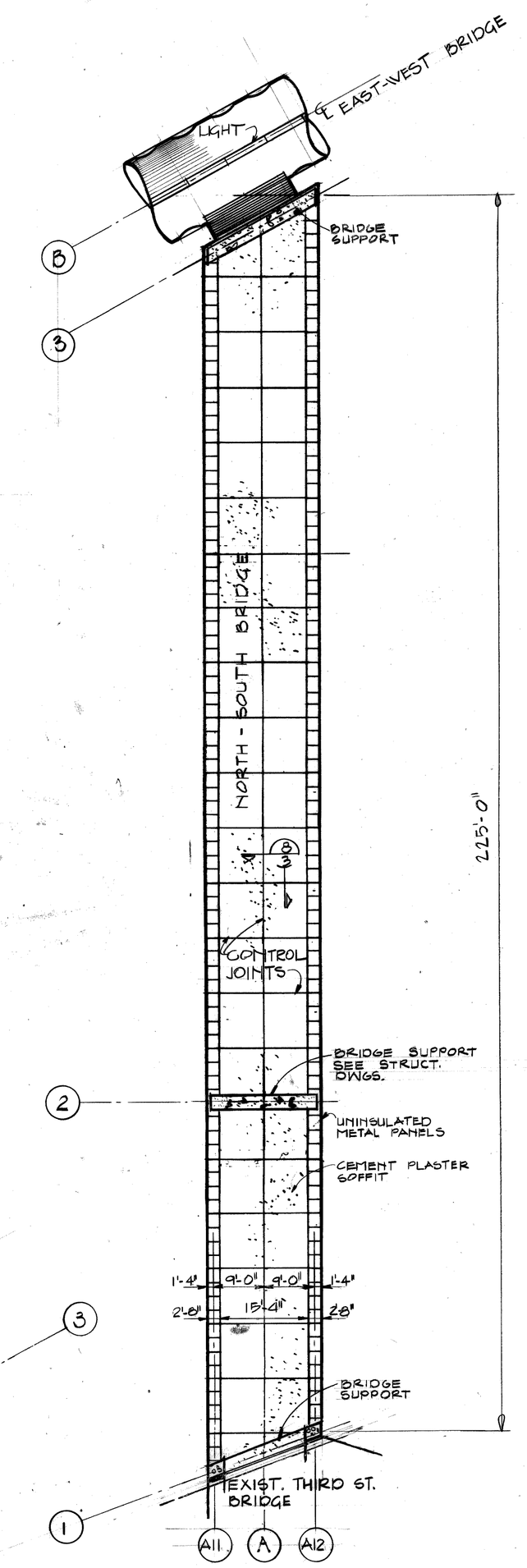

REFLECTED PLAN SOFFIT
1/16" = 1'-0"

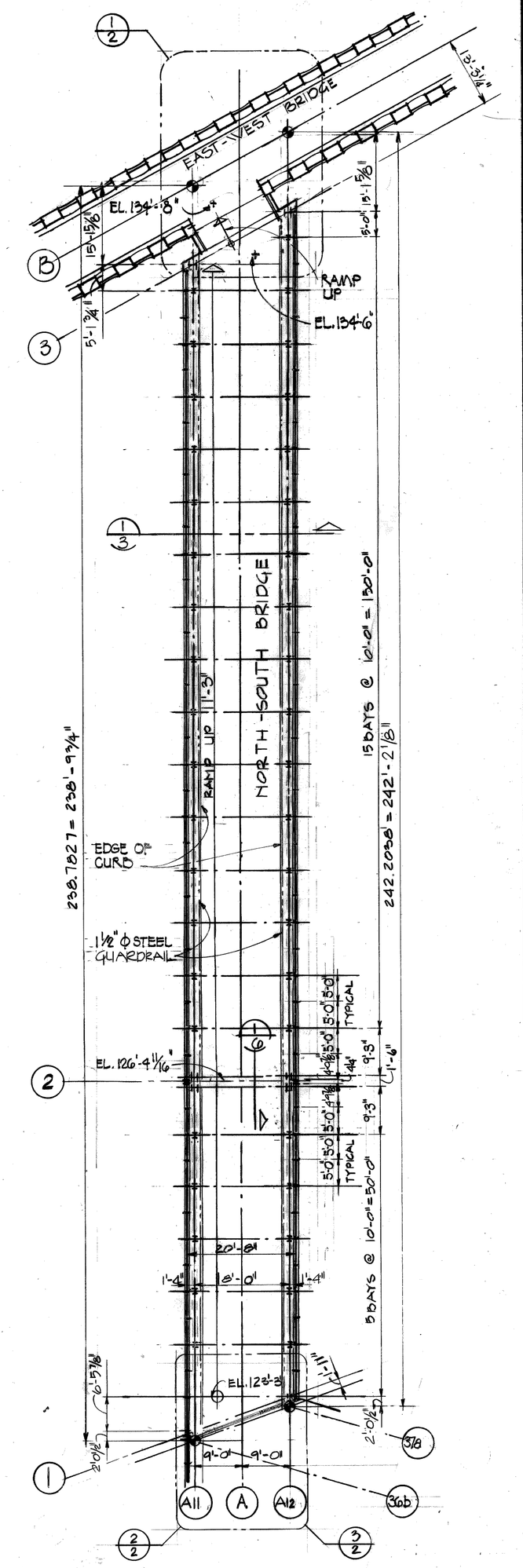

WALKWAY PLAN
1/16" = 1'-0"

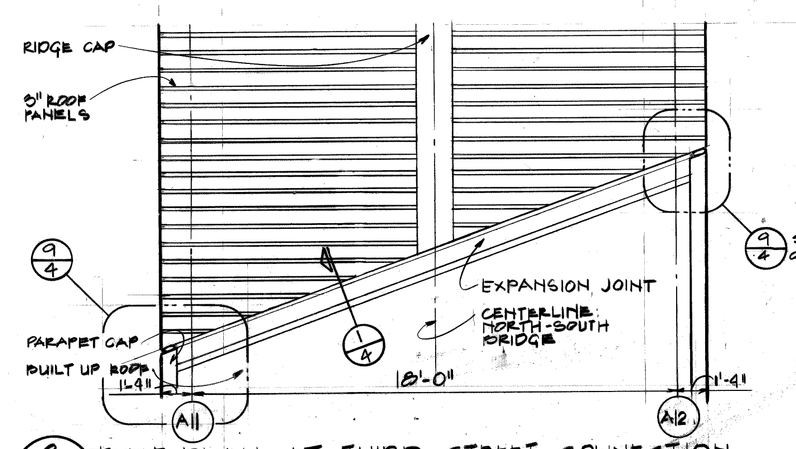

3 ROOF PLAN AT THIRD STREET CONNECTION
2 1/4" = 1'-0"

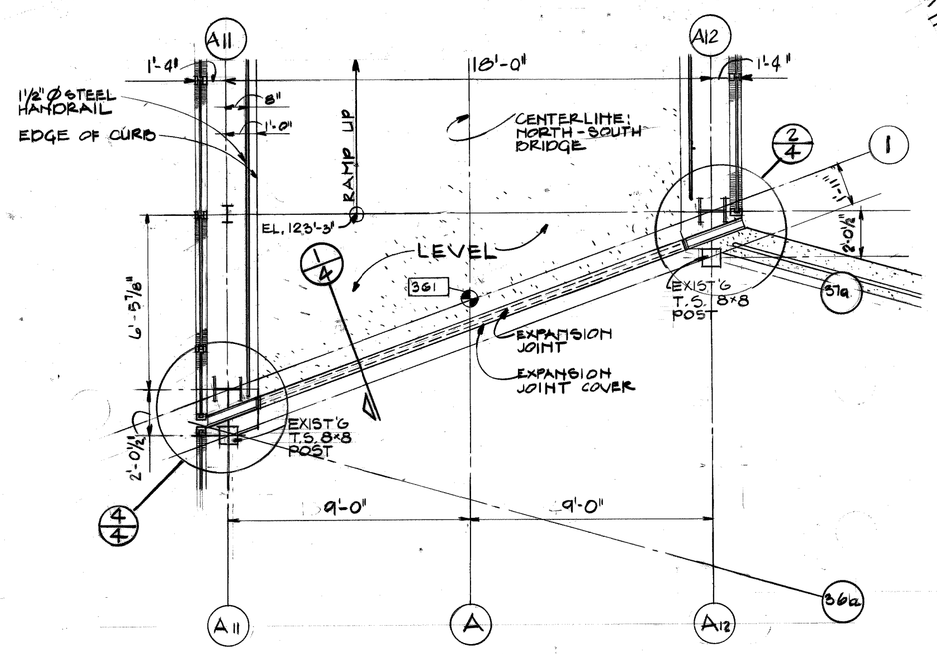

2 NORTH-SOUTH BRIDGE CONNECTION AT THIRD STREET
2 1/4" = 1'-0" (SEE REFLECTED CEILING PLAN OF THIS AREA ON SHEET #4, DETAIL # 10.)

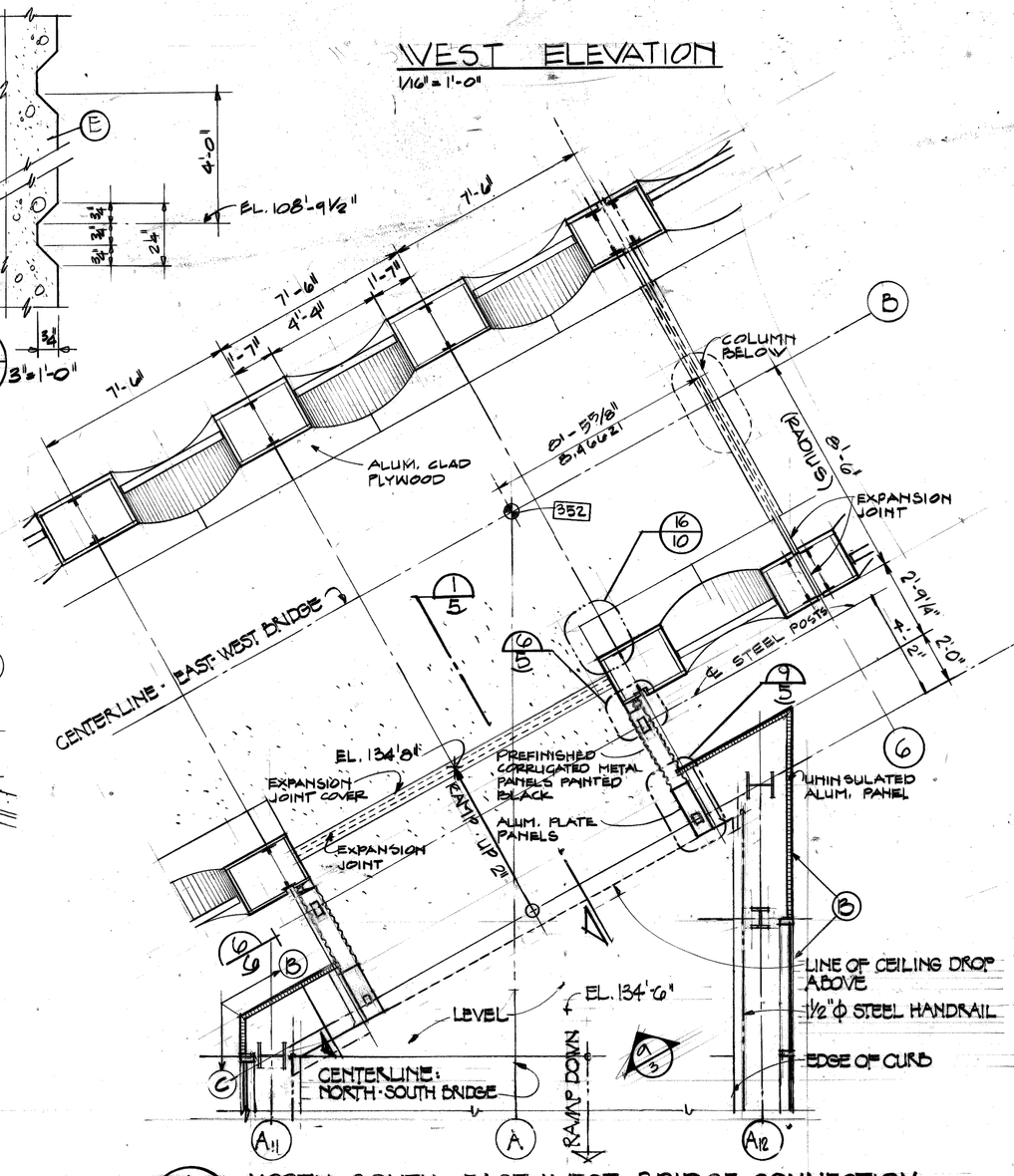

1 NORTH-SOUTH EAST-WEST BRIDGE CONNECTION
2 1/4" = 1'-0"

EXTERIOR COLORS	
CODE	TO MATCH PITTSBURGH PAINT NO.
(A)	GREEN AS SELECTED BY ARCH
(B)	P 2752
(C)	D 4752
(D)	WHITE AS SELECTED BY ARCH
(E)	N 7211

GENERAL NOTES
1. LOUVERS @ NORTH-SOUTH BRIDGE TO MATCH COLOR OF ADJACENT METAL PANELS

CALLED NORTH

UNCL = UNDERCLEARANCE

Joe Louis Sports Arena
Pedestrian Walkway
For City Engineering Division

SH&G
Smith, Hinchman & Grylls Associates, Inc.
Architects Engineers Planners
455 West Fort Street
Detroit, Michigan 48226
(313)964-3000

SH&G Job. No. 11732C

OWNER — Issued For — 5-30-80 Date

1-18-80 Date — D.S. Drawn By
By Architect/Engineer
Correlation Check
Project Manager
Construction Administrative Div. Approval
Division Approval

Key Plan

Detail Number — Location or Detail Sheet

N

Drawing Title
PLAN AND ELEVATIONS NORTH-SOUTH BRIDGE

15031A Project No.
A-2 Drawing No.
AS NOTED Scale
3 of 96

8-26-79

MC/PRM# 71858

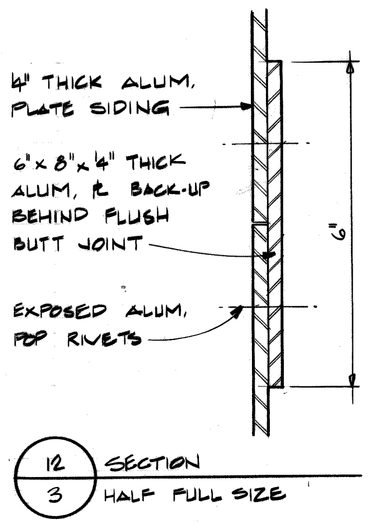

12/3 SECTION
HALF FULL SIZE

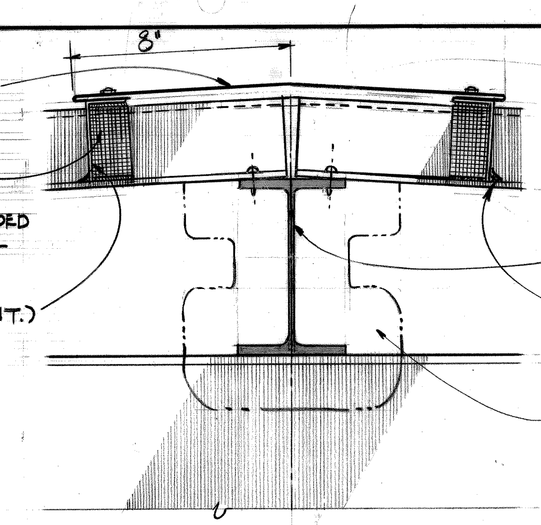

10/3 SECTION
3" = 1'-0"

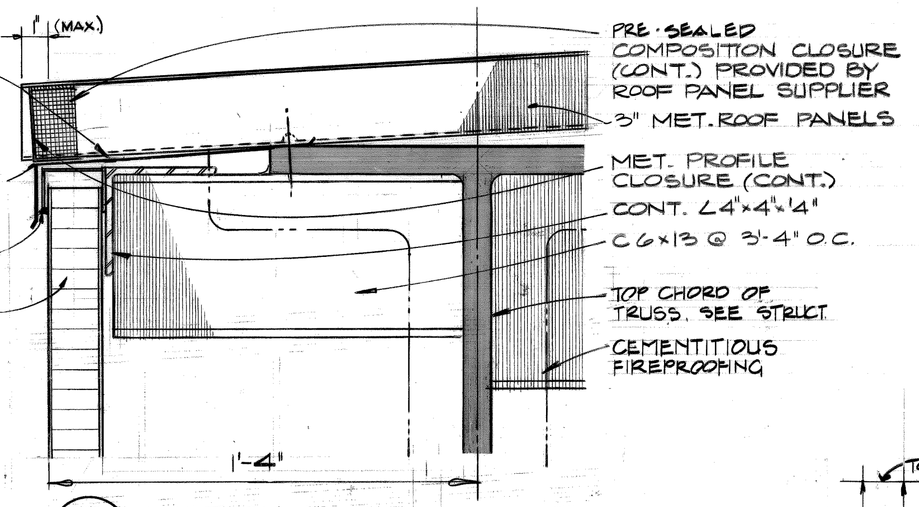

5/3 SECTION
3" = 1'-0"

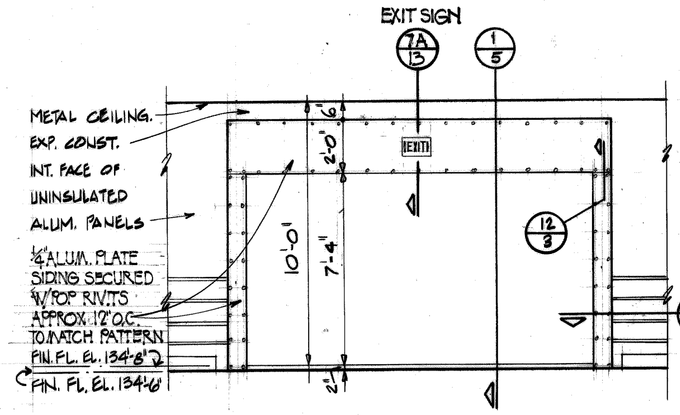

9/2,5 ELEVATION @ BRIDGE CONNECTION
¼" = 1'-0"

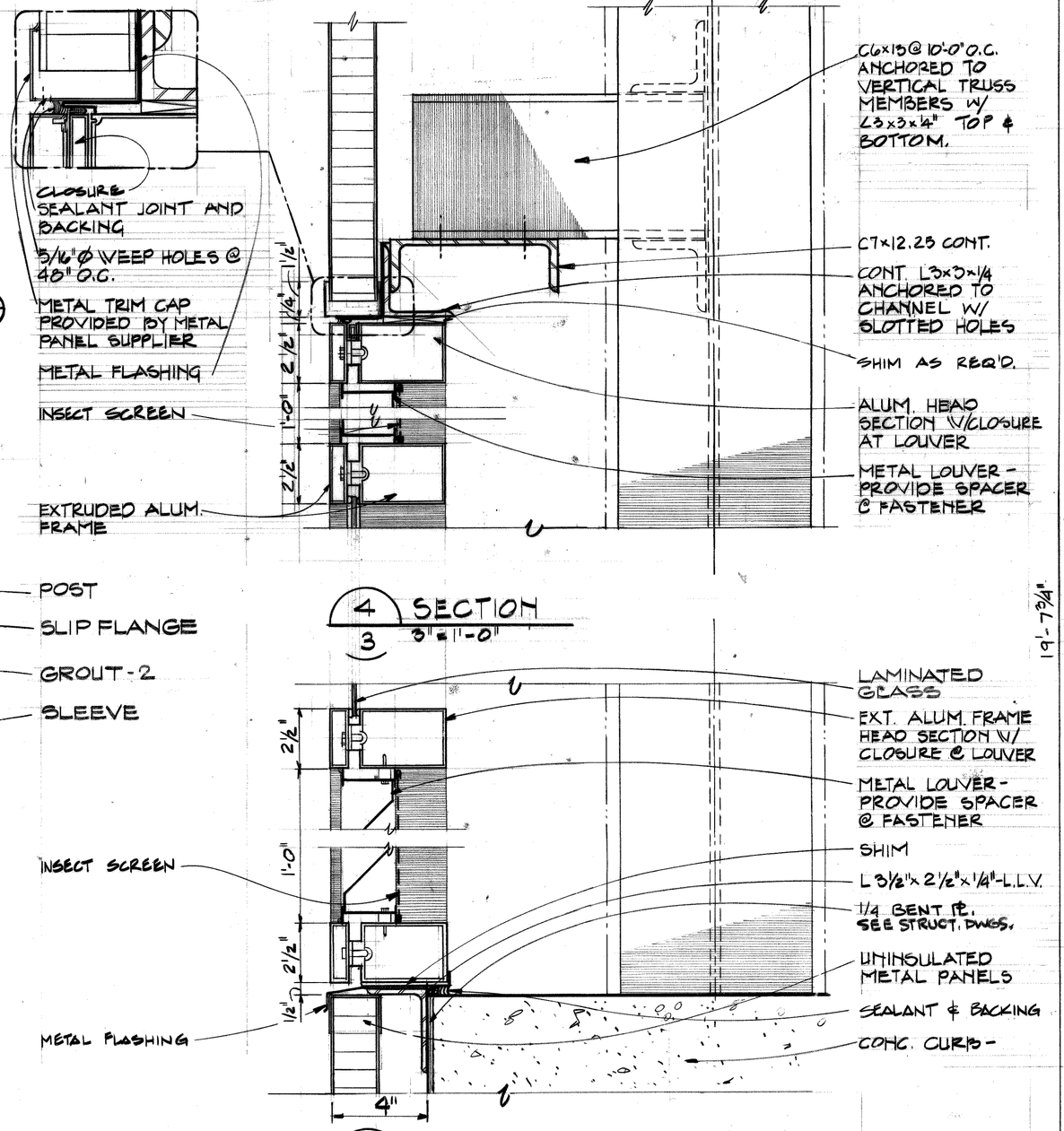

4/3 SECTION
3" = 1'-0"

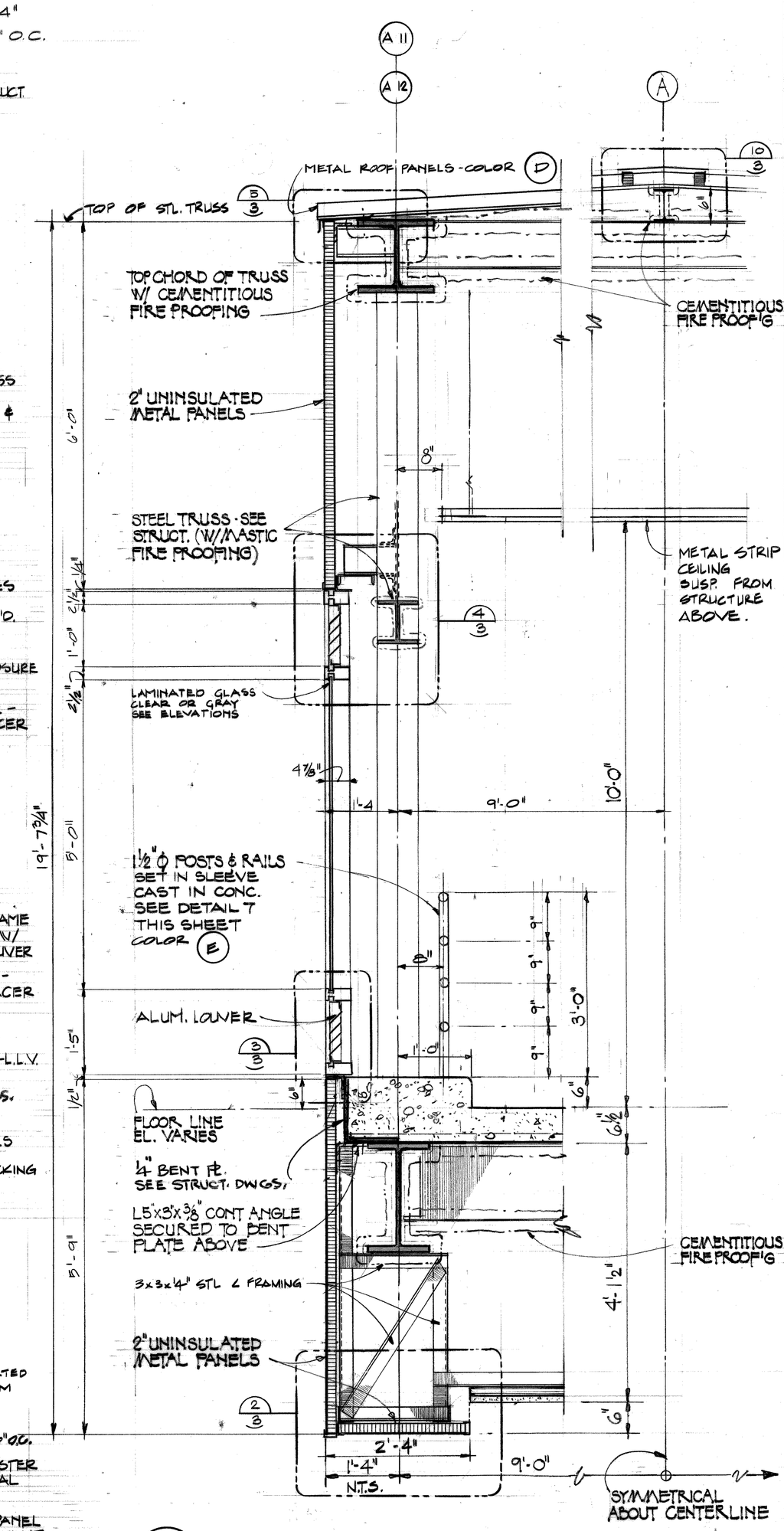

1/2,3 SECTION THROUGH NORTH-SOUTH BRIDGE
¾" = 1'-0"

GENERAL NOTE: ALL APPLIED FIREPROOFING, MASTIC AND CEMENTITIOUS, APPLIED TO STRUCTURAL STEEL IS TO BE AS REQUIRED FOR A 2 HOUR FIRE-RESISTIVE RATING.

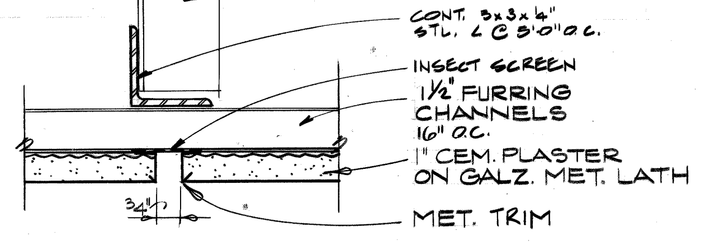

8/2 CONTROL JOINT IN CEMENT PLASTER SOFFIT
3" = 1'-0"

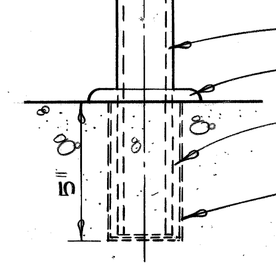

7/3 HANDRAIL POST SLEEVE
3" = 1'-0"

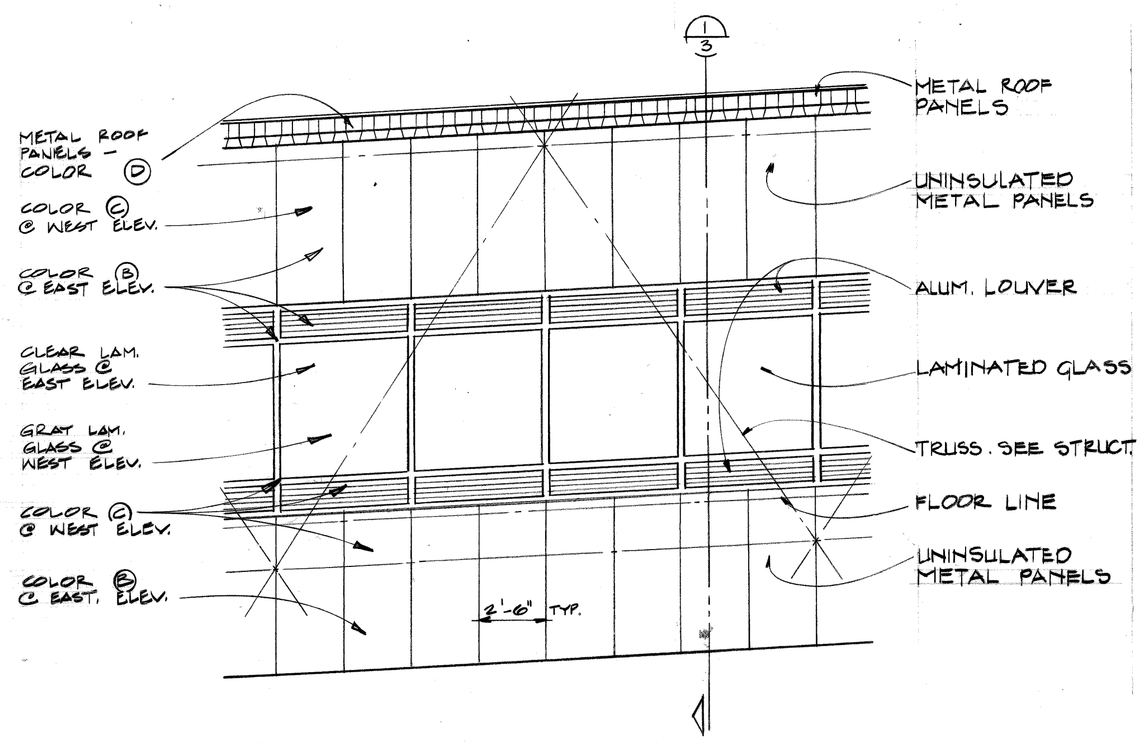

6/2 PARTIAL ELEVATION - NORTH-SOUTH BRIDGE
¼" = 1'-0" (EAST ELEV. SHOWN - WEST ELEV. SIM. OPP. HAND)

3/3 SECTION
3" = 1'-0"

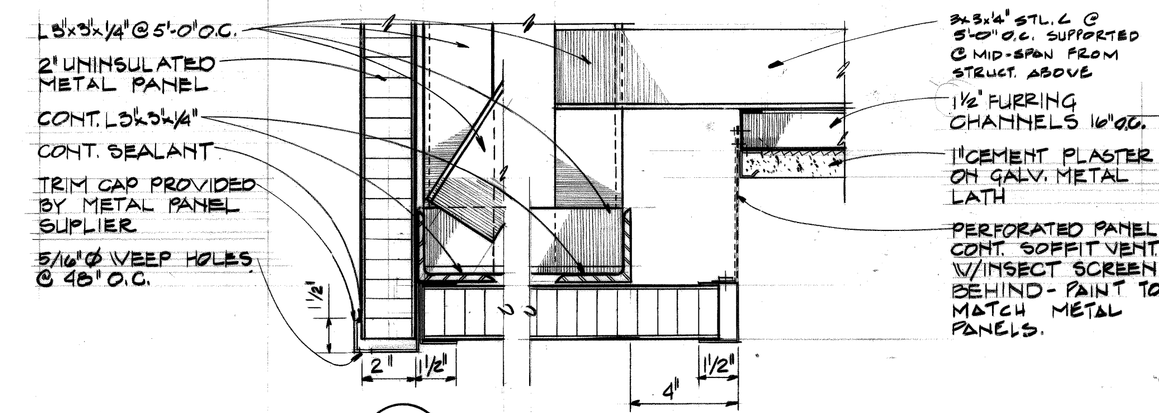

2/3 3" = 1'-0"

Joe Louis Sports Arena
Pedestrian Walkway
For City Engineering Division

SH&G
Smith, Hinchman & Grylls Associates, Inc.
Architects Engineers Planners
455 West Fort Street
Detroit, Michigan 48226
(313)964-3000
SH&G Job. No. 11732C

OWNER Issued For — 5-30-80 Date

1-18-80 Date — D.S. Drawn By
Div. Architect/Engineer
Correlation Check
Project Manager
Construction Admin. — Div. Approval
Division Approval

Key Plan

Detail Number / Location or Detail Sheet

N

Drawing Title
DETAILS NORTH-SOUTH BRIDGE

15031A Project No.
A-3 Drawing No.
AS NOTED Scale

9-26-79

MC/PRM# 71858

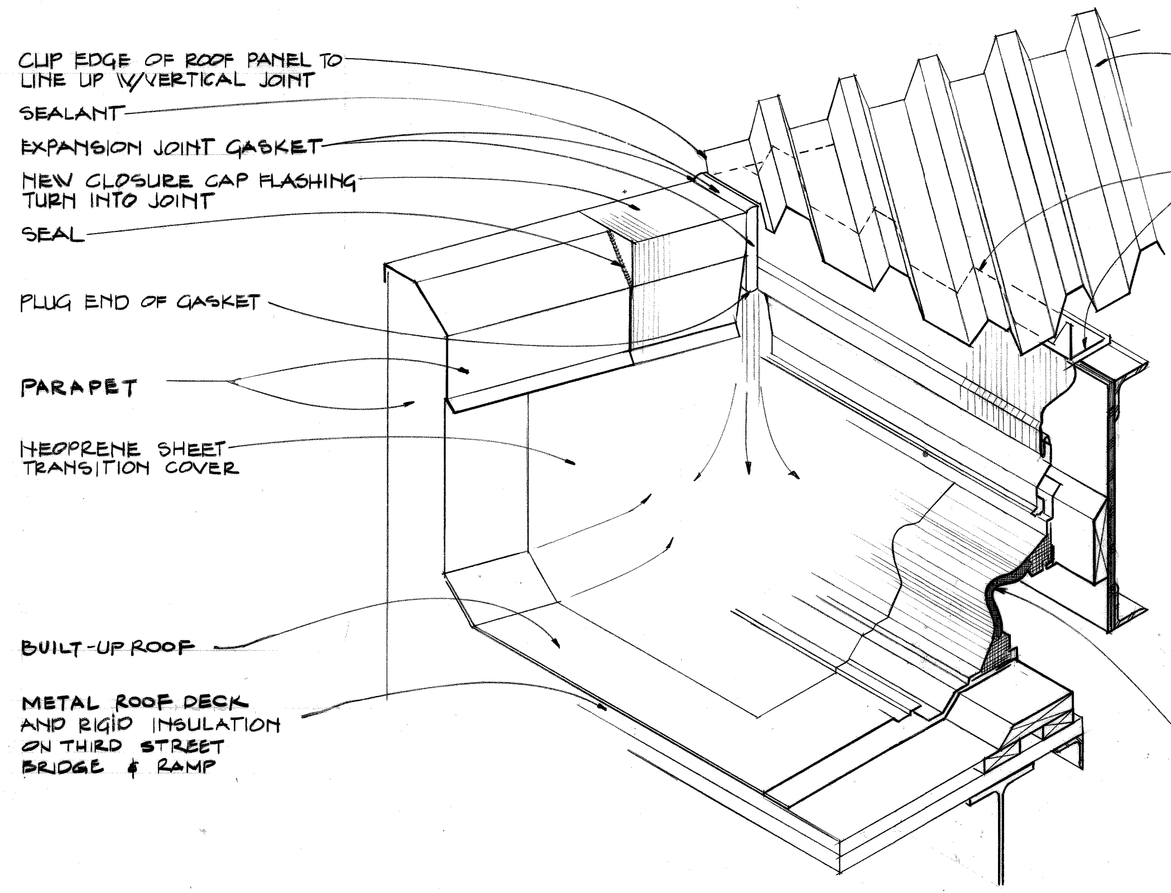

9 / 2,4 ISOMETRIC
NO SCALE

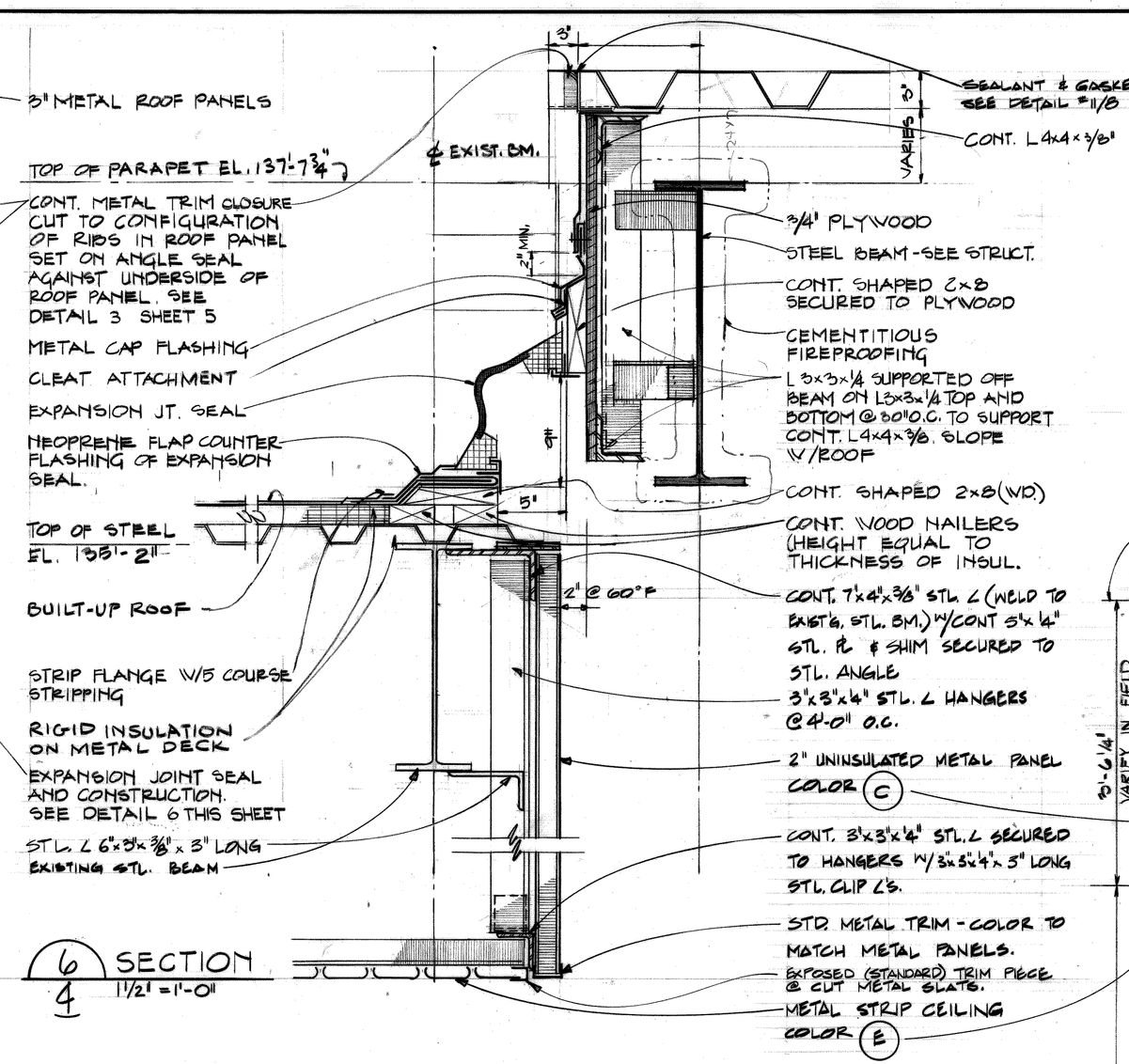

6 / 4 SECTION
1½" = 1'-0"

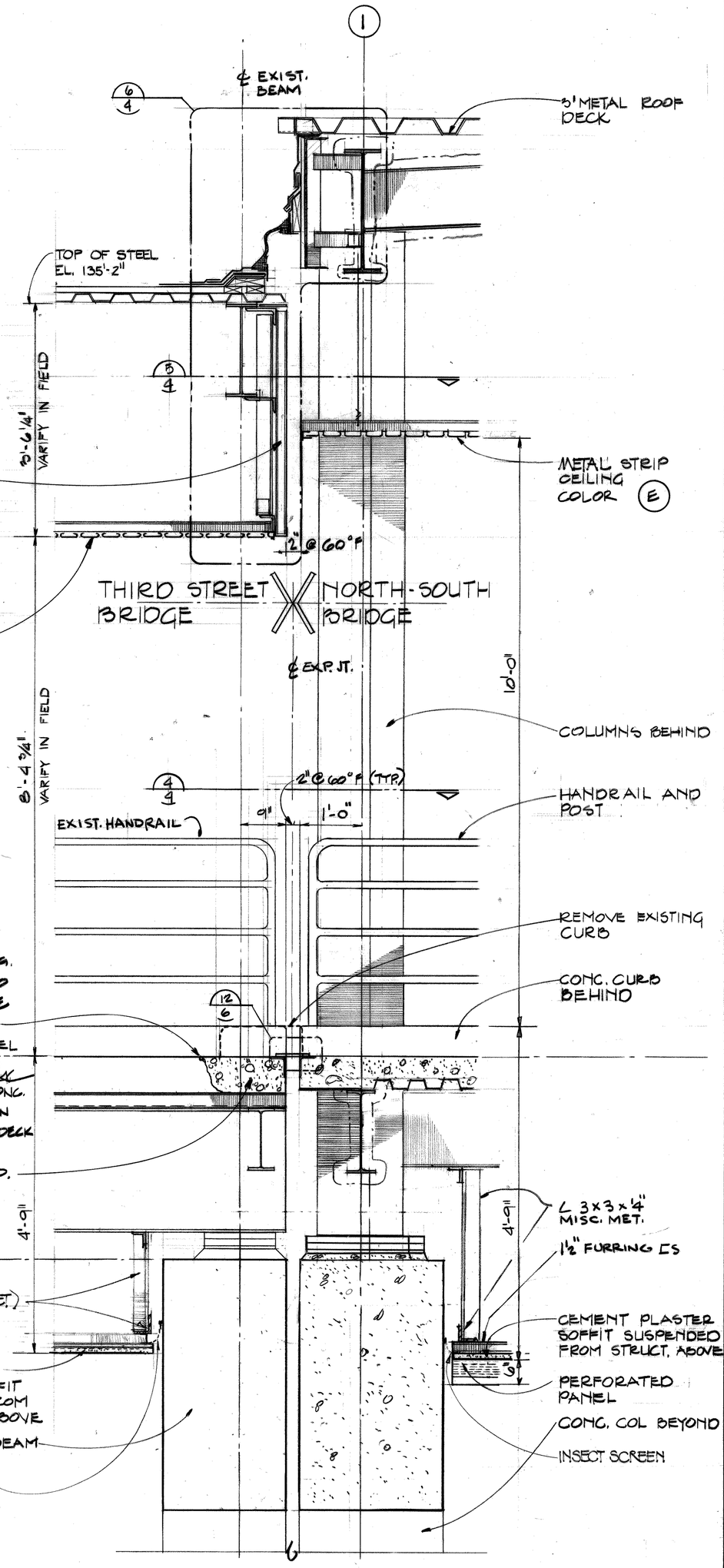

1 / 2 SECTION
3/4" = 1'-0"

GENERAL NOTE:
ALL FIELD APPLIED FIREPROOFING, MASTIC AND CEMENTITIOUS, APPLIED TO STRUCTURAL STEEL IS TO BE AS REQ'D. FOR A 2 HOUR FIRE RATING.

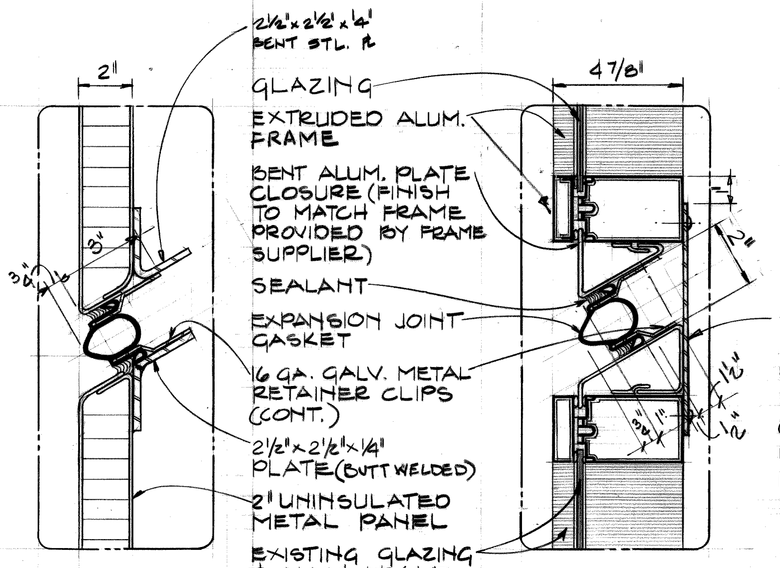

11 / 4 PLAN
3" = 1'-0"

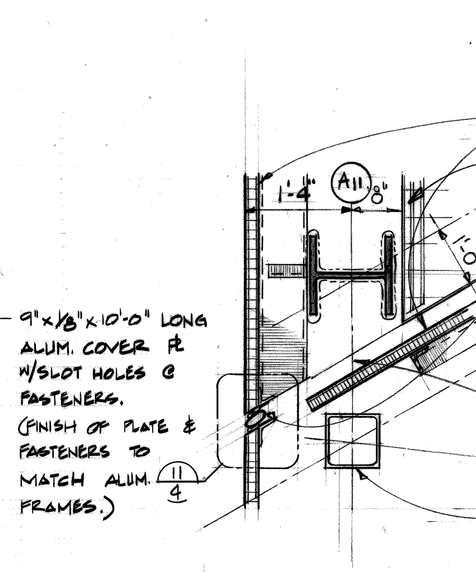

8 / 4 PLAN
3" = 1'-0"

5 / 2,4 PLAN
3/4" = 1'-0"

3 / 2,4 PLAN
3/4" = 1'-0"

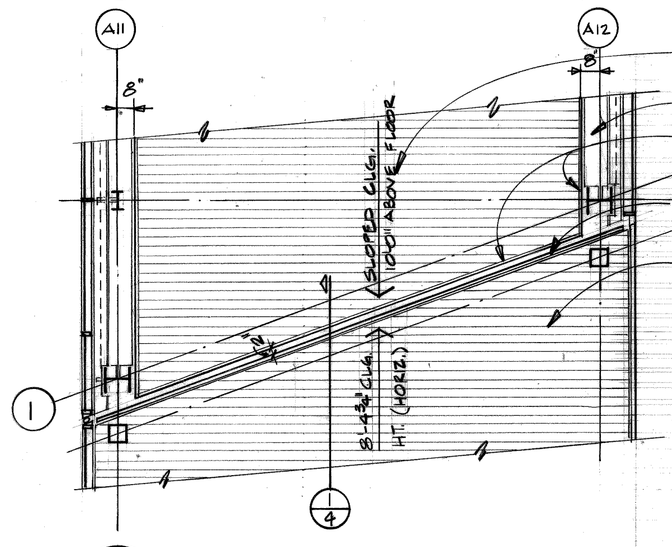

10 / 2 REFLECTED CEILING PLAN
1/4" = 1'-0"

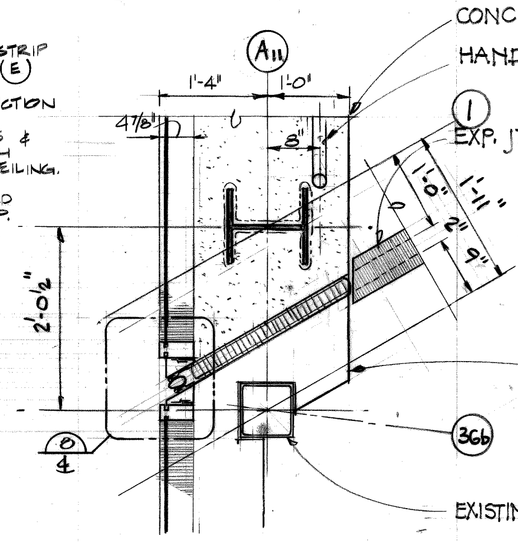

4 / 2,4 PLAN
3/4" = 1'-0"

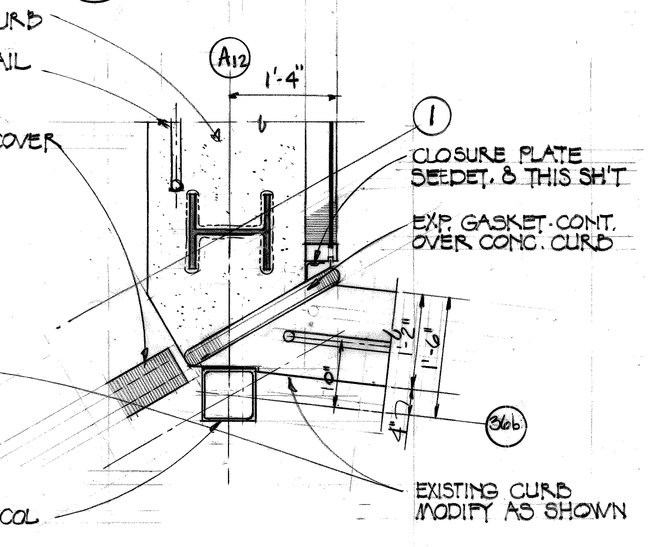

2 / 2,4 PLAN
3/4" = 1'-0"

Joe Louis Sports Arena
Pedestrian Walkway
For City Engineering Division

SH&G
Smith, Hinchman & Grylls Associates, Inc.
Architects Engineers Planners
455 West Fort Street
Detroit, Michigan 48226
(313)964-3000

SH&G Job. No. 11732C

OWNER	5-30-80
Issued For	Date
1-18-80	T.D. D.S.
Date	Drawn By
Div. Architect/Engineer	
Correlation Check	
Project Manager	
Construction Administrative Div. Approval	
Division Approval	

Key Plan

Detail Number / Location or Detail Sheet

N

Drawing Title
DETAILS NORTH-SOUTH BRIDGE

15031A
Project No.
A-4
Drawing No.
AS NOTED
Scale

5 OF 96

9-26-79

MC/PRM# 71858

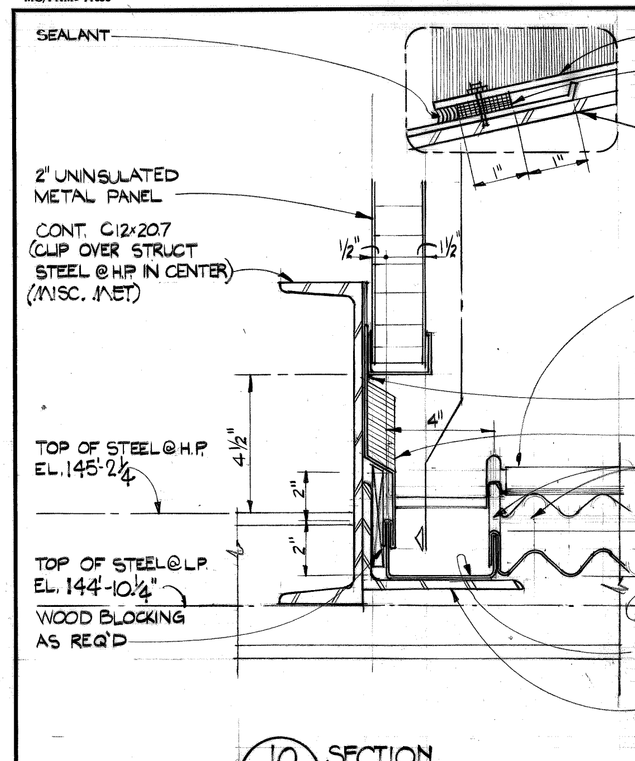

10 / 5 SECTION
3"=1'-0"

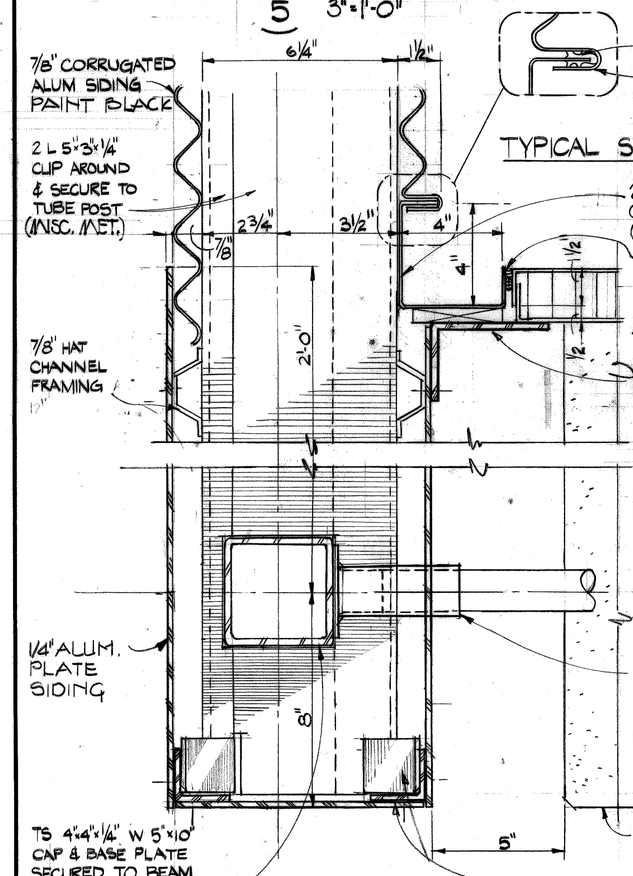

9 / 5 PLAN
3"=1'-0"

7 / 5 SECTION
3"=1'-0"

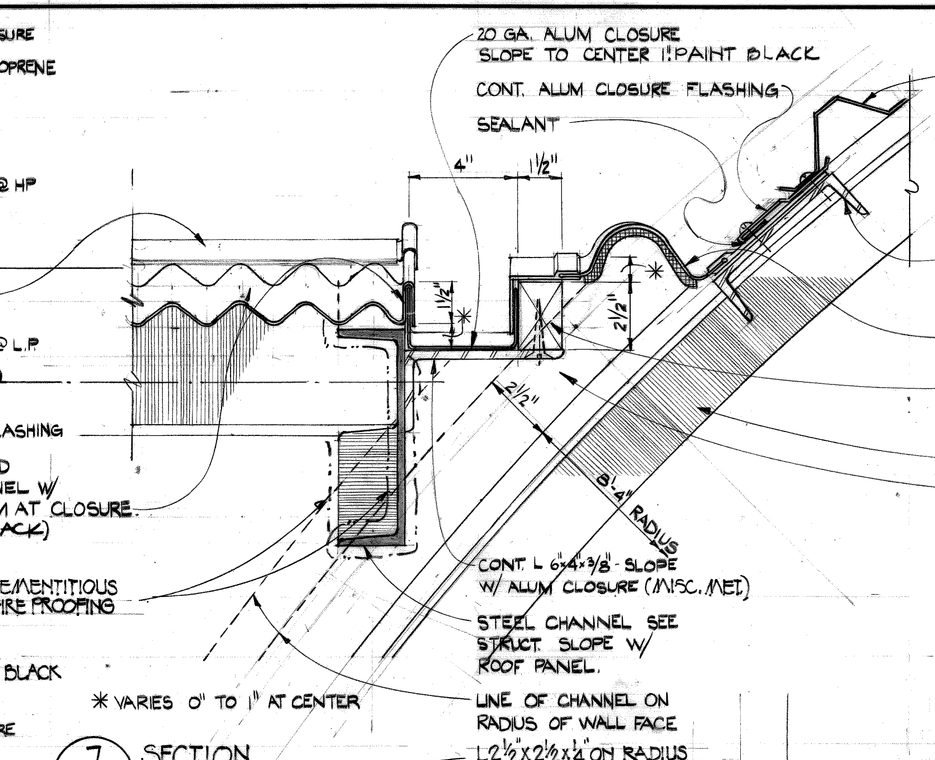

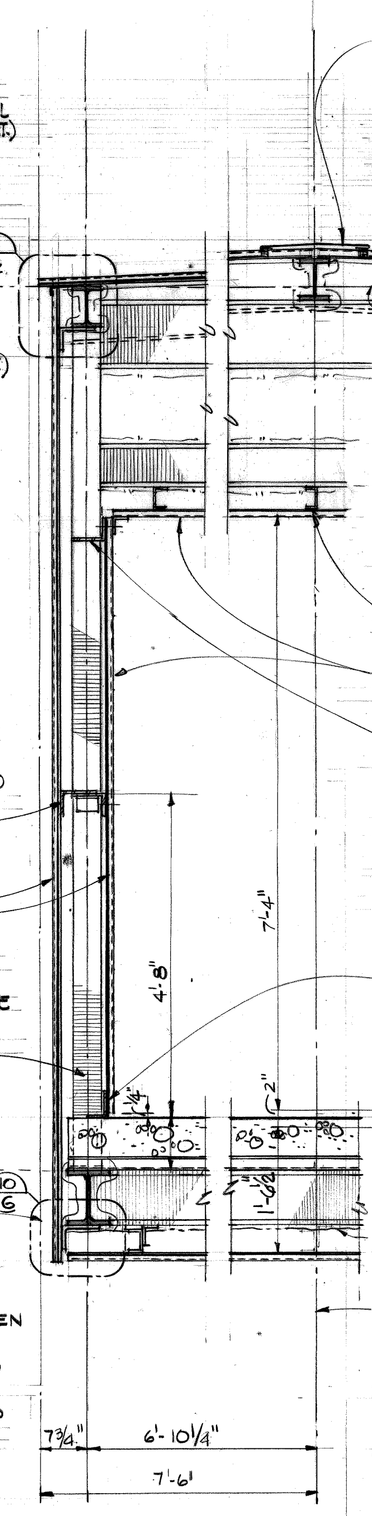

8 / 5 SECTION
3"=1'-0"

5 / 5 SECTION
3"=1'-0"

4 / 5 SECTION
¾"=1'-0"

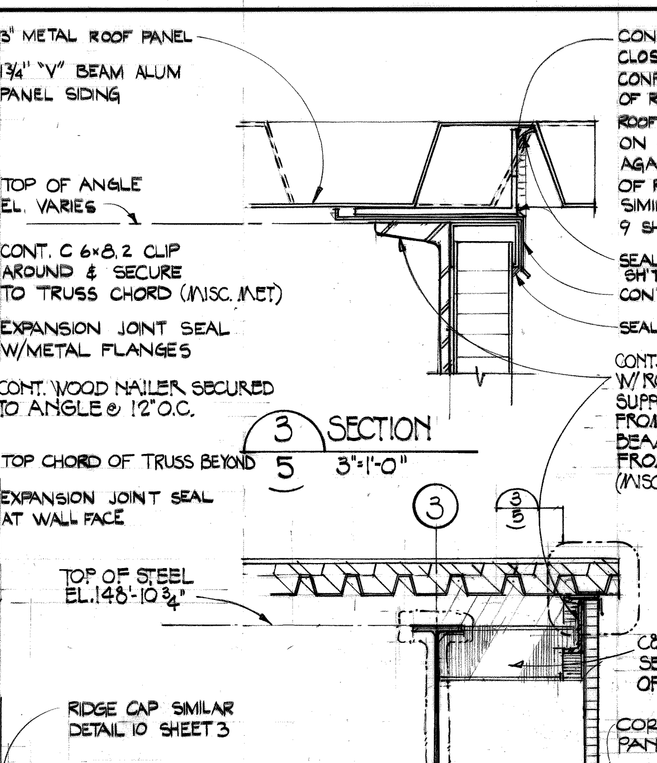

3 / 5 SECTION
3"=1'-0"

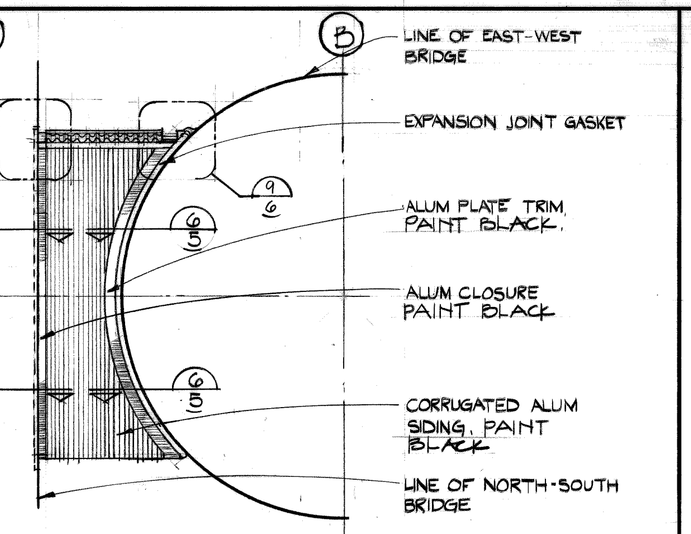

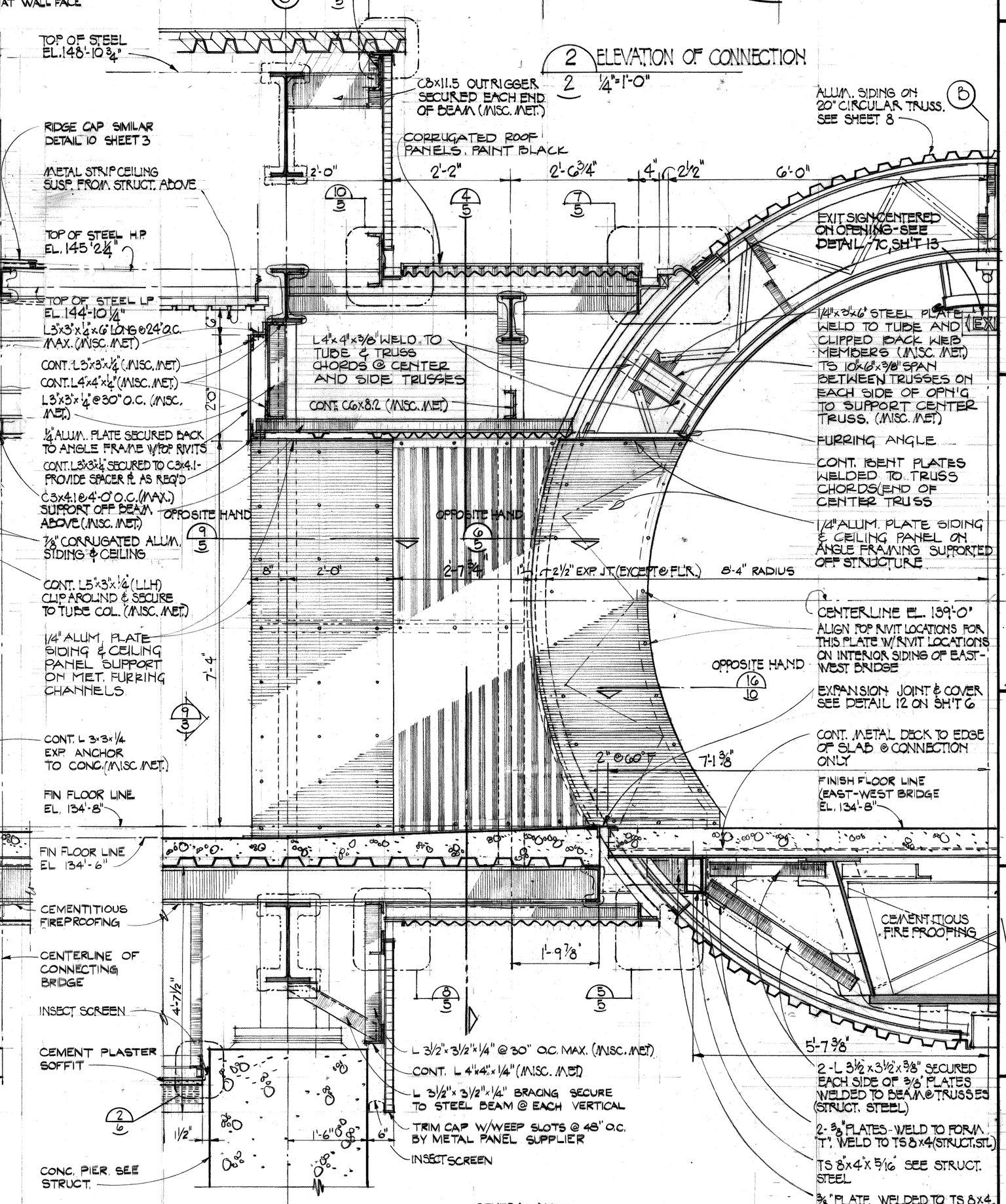

2 / 2 ELEVATION OF CONNECTION
¼"=1'-0"

1 / 2 SECTION
¾"=1'-0"

GENERAL NOTE:
ALL FIELD APPLIED FIRE PROOFING, CEMENTITIOUS AND MASTIC, APPLIED TO STRUCT. STEEL IS TO BE AS REQ'D FOR 2 HOUR FIRE RATING

Joe Louis Sports Arena

Pedestrian Walkway

For City Engineering Division

SH&G
Smith, Hinchman & Grylls Associates, Inc.
Architects Engineers Planners
455 West Fort Street
Detroit, Michigan 48226
(313)964-3000

SH&G Job. No. 11732C

OWNER	5-30-80
Issued For	Date
1-18-80	B
Date	Drawn By

Div. Architect/Engineer
Correction Check
Project Manager
Construction Administrative Div. Approval
Division Approval

Key Plan

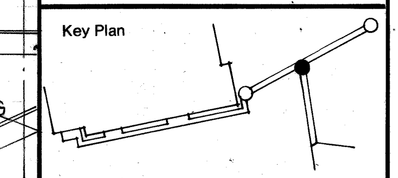

Drawing Title
DETAILS CONNECTION NORTH-SOUTH BRIDGE TO EAST-WEST BRIDGE
15031A
Project No.
A-5
Drawing No.
AS NOTED
Scale

6 of 936

9-26-79

MC/PRM# 71858

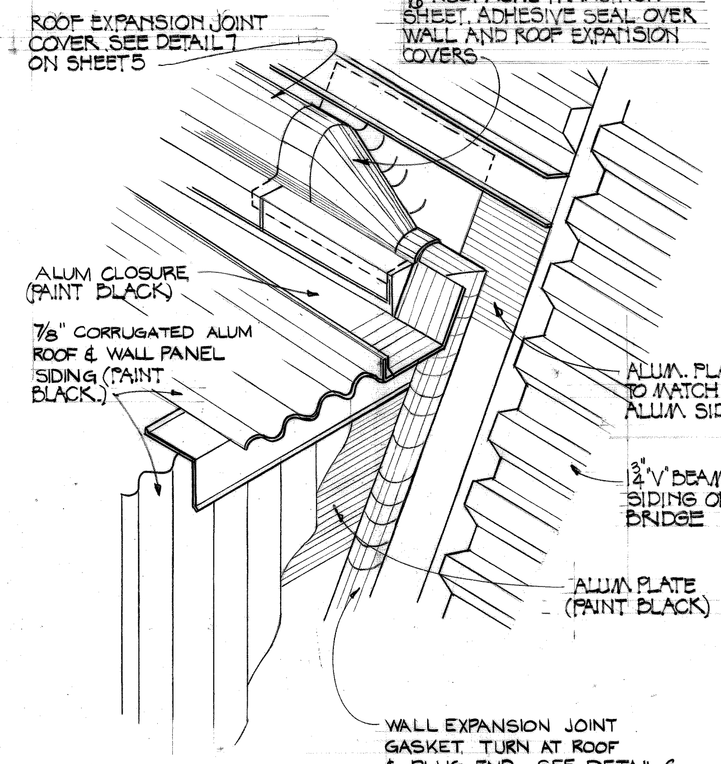

9 / 5 ISOMETRIC DETAIL
1½"=1'-0"

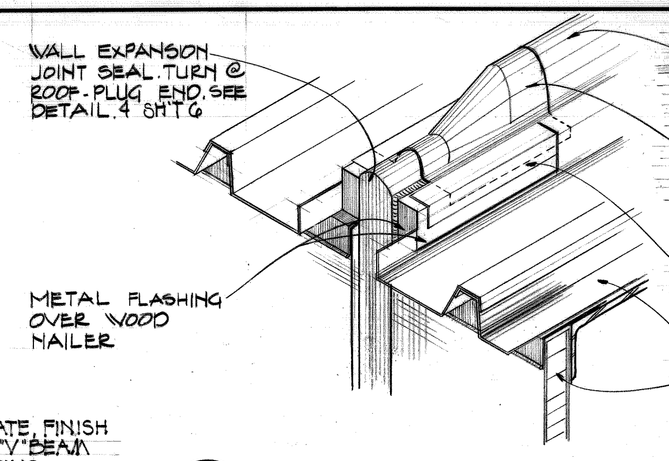

7 / 2 ISOMETRIC DETAIL
NOT TO SCALE

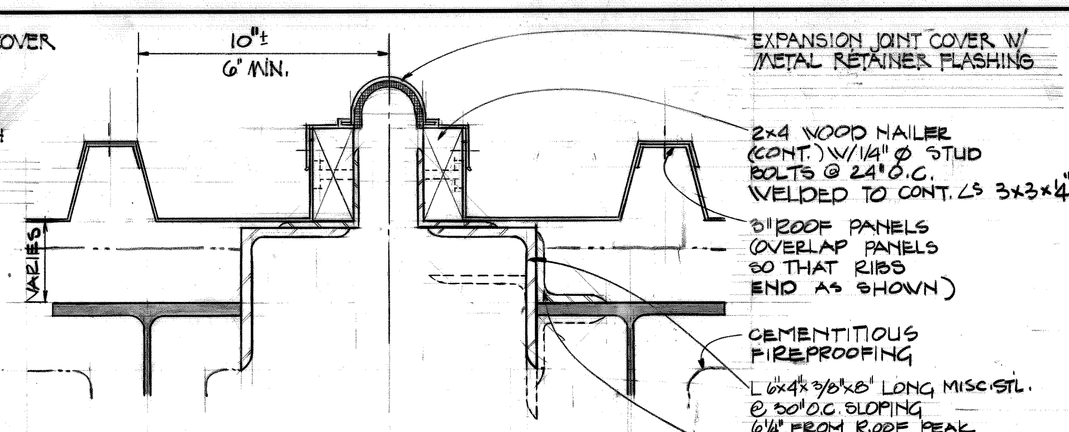

5 / 6 SECTION
3"=1'-0"

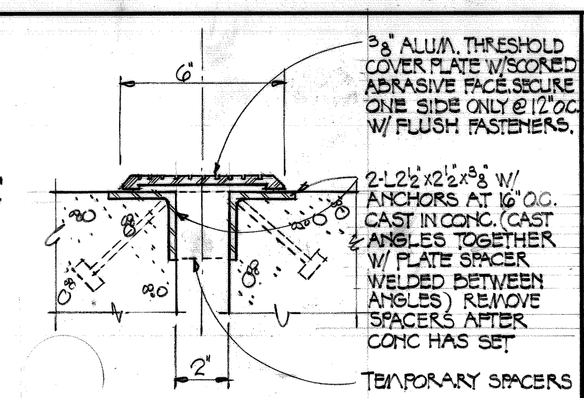

12 / 4,5,6 EXPANSION JOINT COVER
SCALE 3"=1'-0"

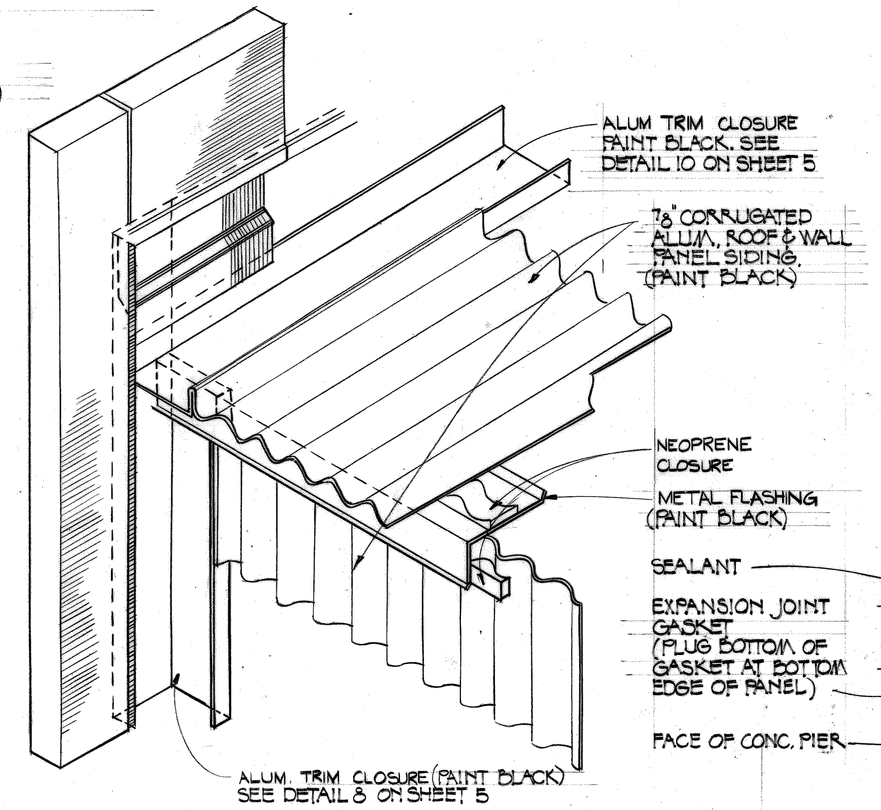

8 / 5 ISOMETRIC DETAIL
1½"=1'-0"

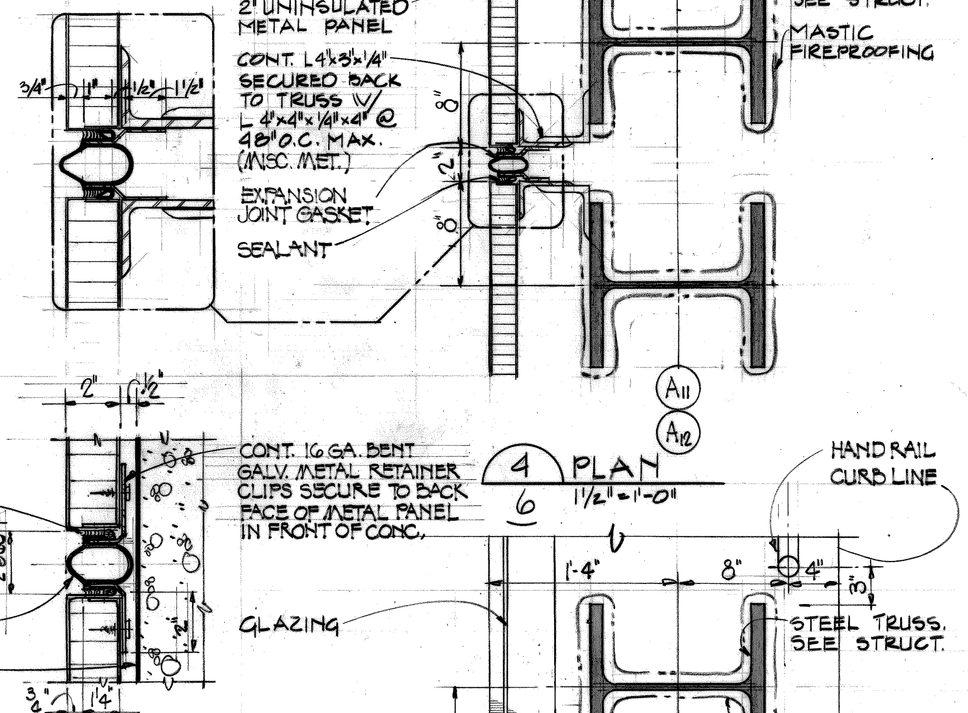

4 / 6 PLAN
1½"=1'-0"

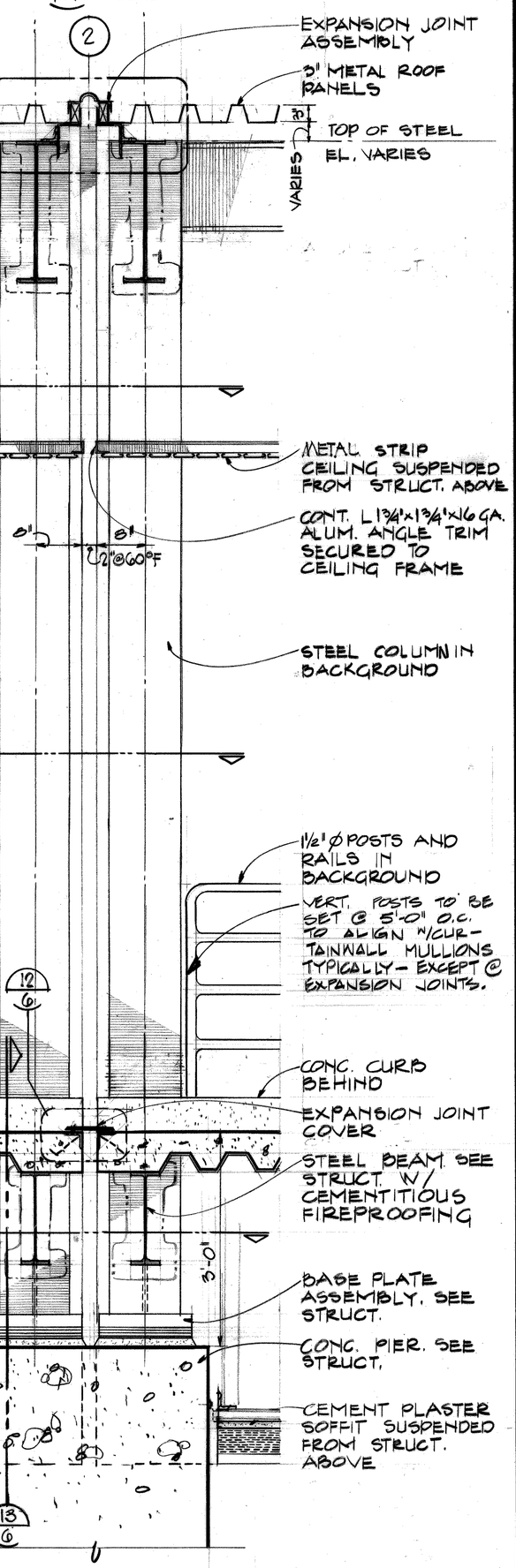

1 / 2 SECTION
3/4"=1'-0"

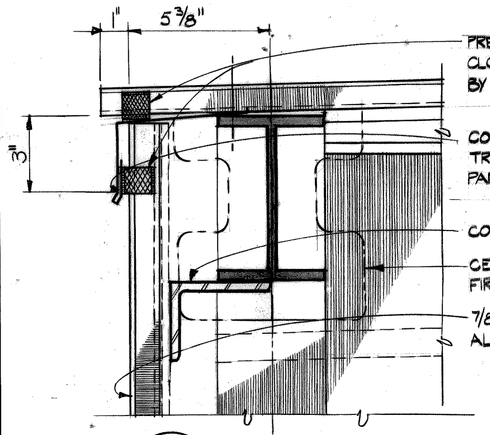

11 / 5 SECTION
3"=1'-0"

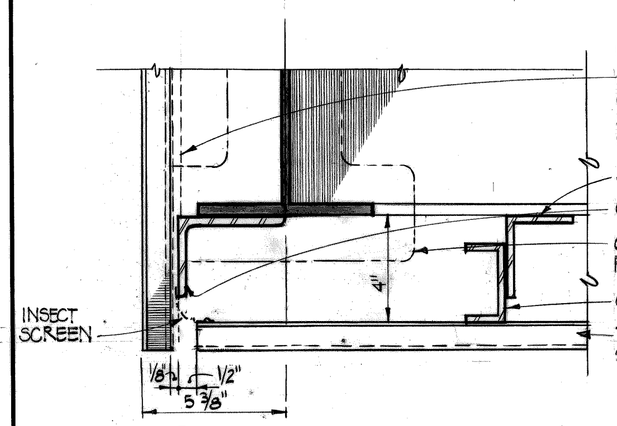

10 / 5 SECTION
3"=1'-0"

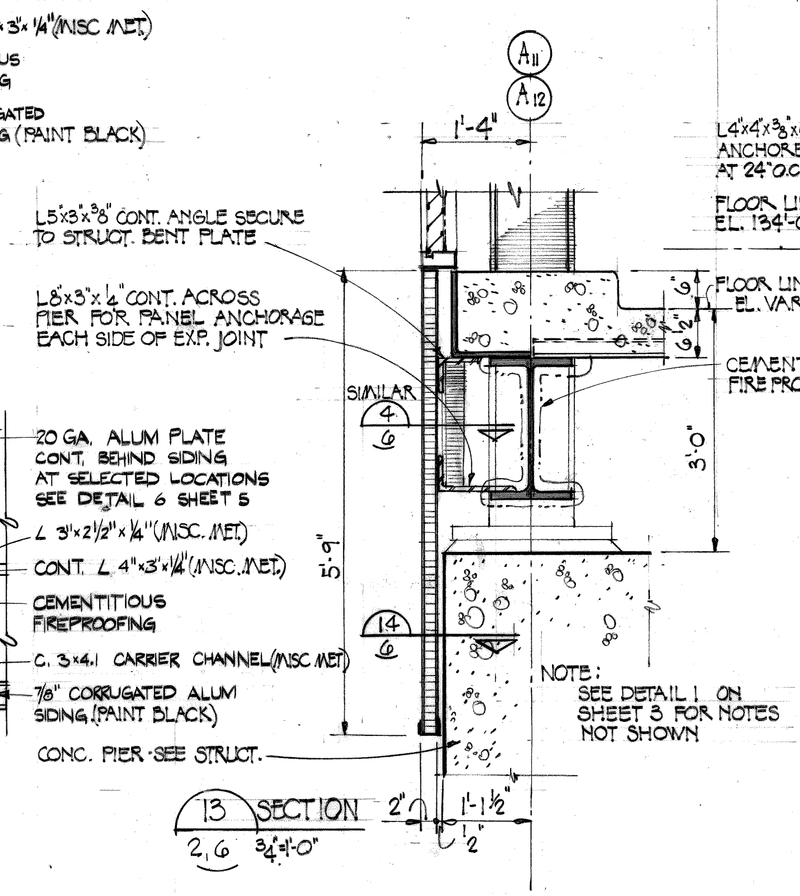

13 / 2,6 SECTION
3/4"=1'-0"

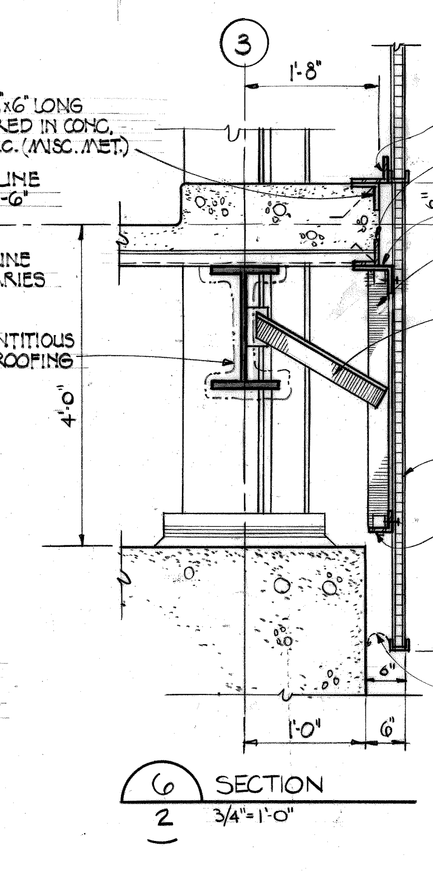

6 / 2 SECTION
3/4"=1'-0"

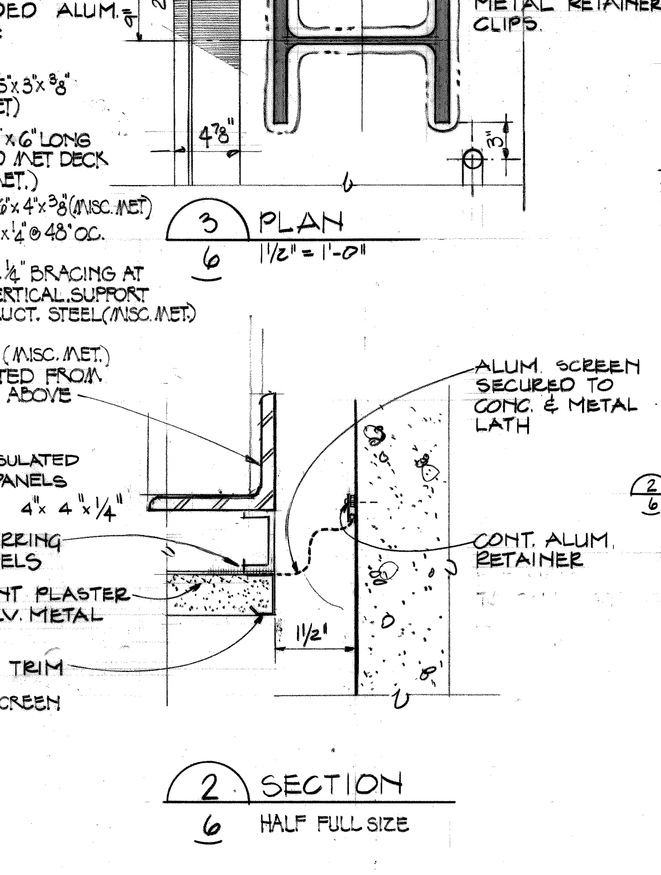

3 / 6 PLAN
1½"=1'-0"

14 / 6 EXPANSION JOINT ASSEMBLY BELOW TOP OF CONC.
3"=1'-0"

GENERAL NOTE:
ALL FIELD APPLIED FIRE-PROOFING, CEMENTITIOUS AND MASTIC, APPLIED TO STRUCT. STEEL IS TO BE AS REQUIRED FOR A 2 HOUR FIRE RATING

Joe Louis Sports Arena
Pedestrian Walkway
For City Engineering Division

SH&G
Smith, Hinchman & Grylls Associates, Inc.
Architects Engineers Planners
455 West Fort Street
Detroit, Michigan 48226
(313)964-3000

SH&G Job. No. 11732C

OWNER	5-30-80
Issued For	Date
1-18-80	B. D. S.
Date	Drawn By

Div. Architect/Engineer
Correlation Check
Project Manager
Construction Administrative Div. Approval
Division Approval

Key Plan

Detail Number / Location or Detail Sheet

N

Drawing Title
DETAILS NORTH-SOUTH BRIDGE

15031A
Project No.
A-6
Drawing No.
A6 NOTED
Scale

7 OF 96

9-26-79

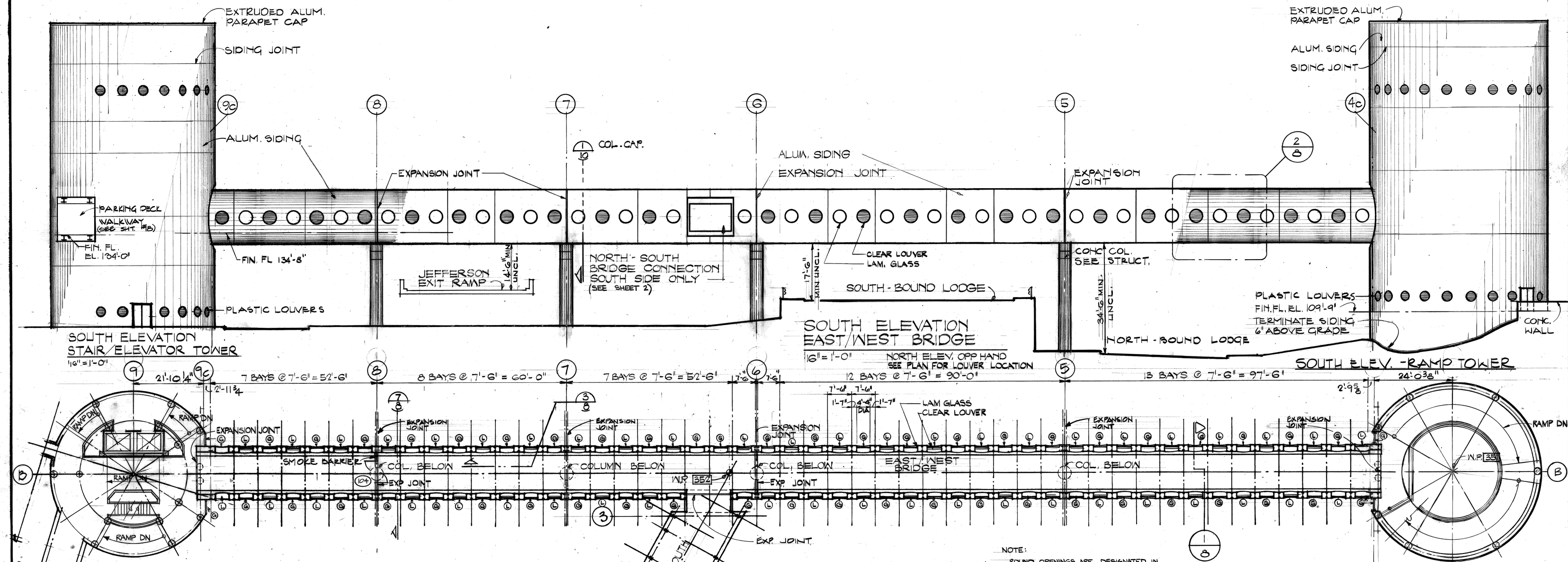

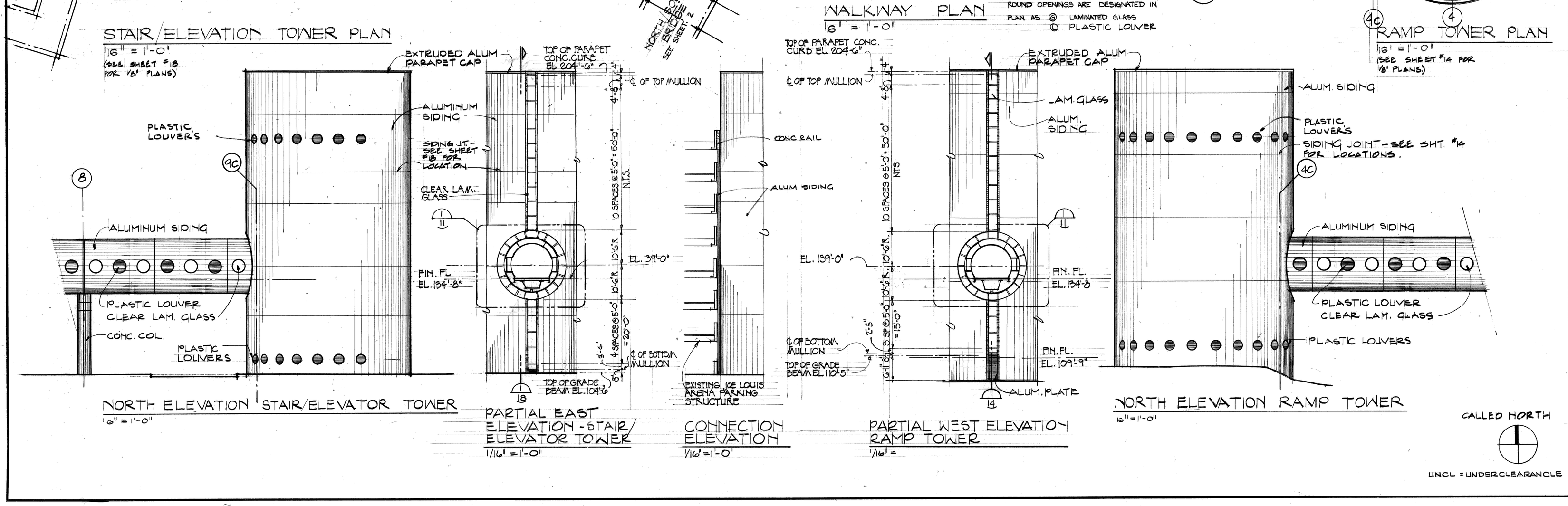

Joe Louis Sports Arena

Pedestrian Walkway

For City Engineering Division

SH&G
Smith, Hinchman & Grylls Associates, Inc.
Architects Engineers Planners
455 West Fort Street
Detroit, Michigan 48226
(313)964-3000

SH&G Job. No. 11732C

OWNER — 5-30-80
Issued For — Date

1-18-80 — C.M.
Date — Drawn By

Div. Architect/Engineer

Correlation Check

Project Manager

Construction Administrative Div. Approval

Division Approval

Key Plan

Detail Number / Location or Detail Sheet

N

Drawing Title
PLAN AND ELEVATIONS EAST-WEST BRIDGE ELEVATIONS STAIR ELEVATOR TOWER AND RAMP TOWER

Project No.
15031A

Drawing No.
A-7

Scale
1/16" = 1'-0"

8 of 916

9-26-79

MC/PRM# 71858

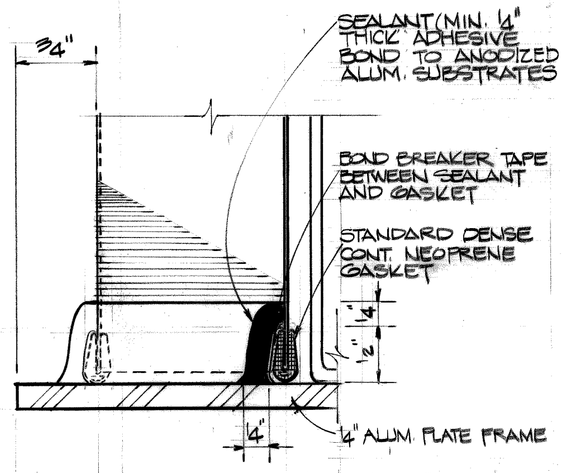

11/8 TYP. SEAL - SIDING TO FRAME
FULL SIZE

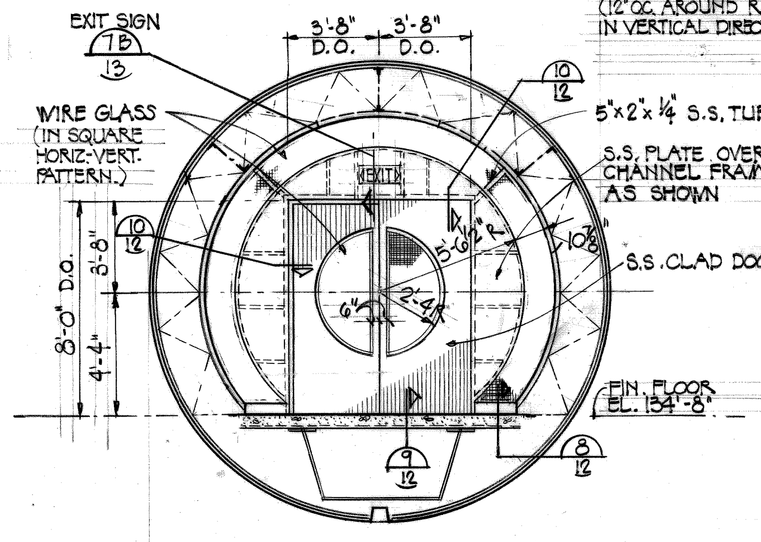

7/7 ELEVATION DOOR NO. 104
1/4"=1'-0"

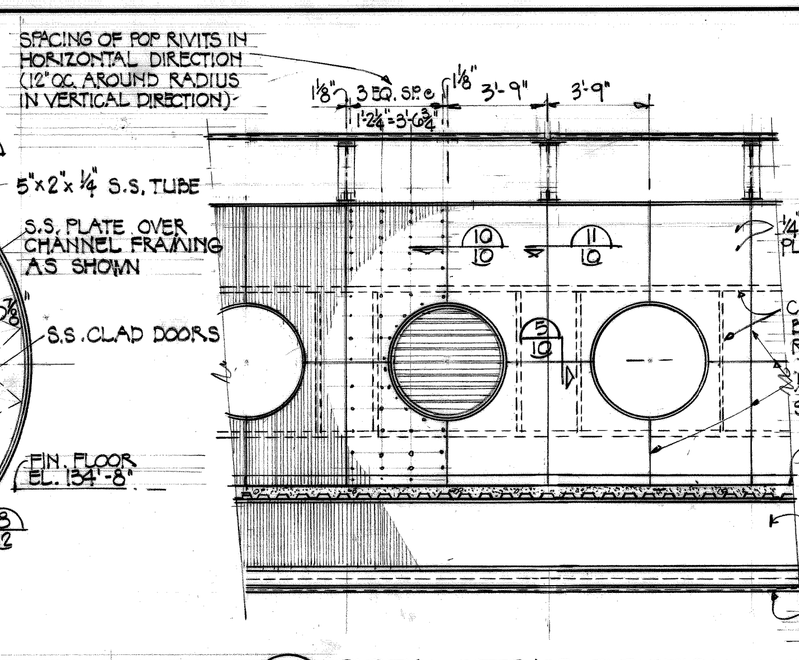

3/7,8 PARTIAL INTERIOR ELEVATION
1/4"=1'-0"

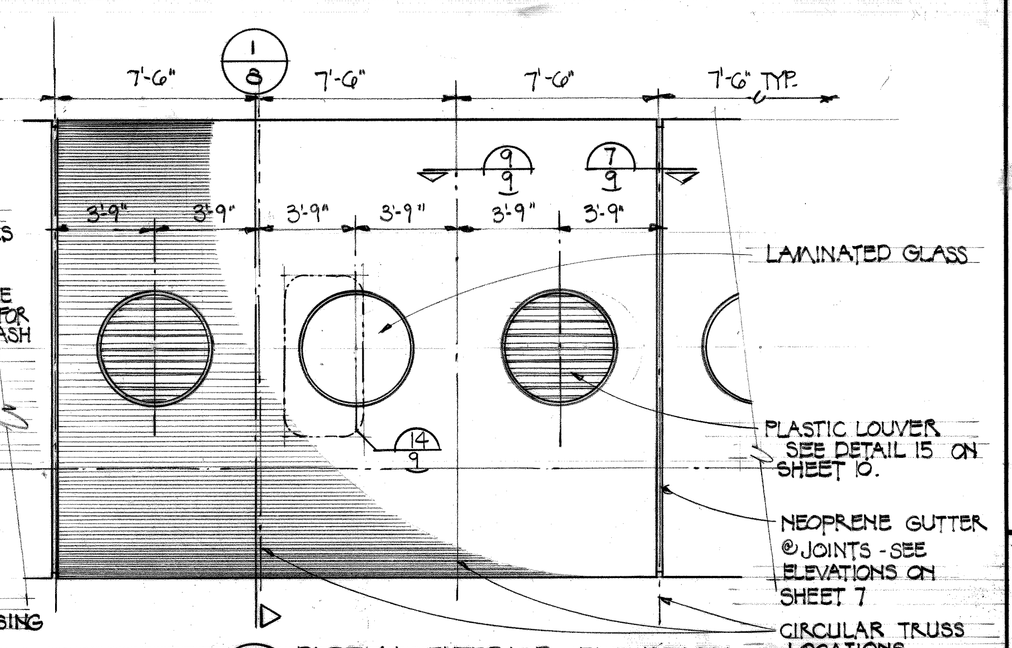

2/7 PARTIAL EXTERIOR ELEVATION
1/4"=1'-0"

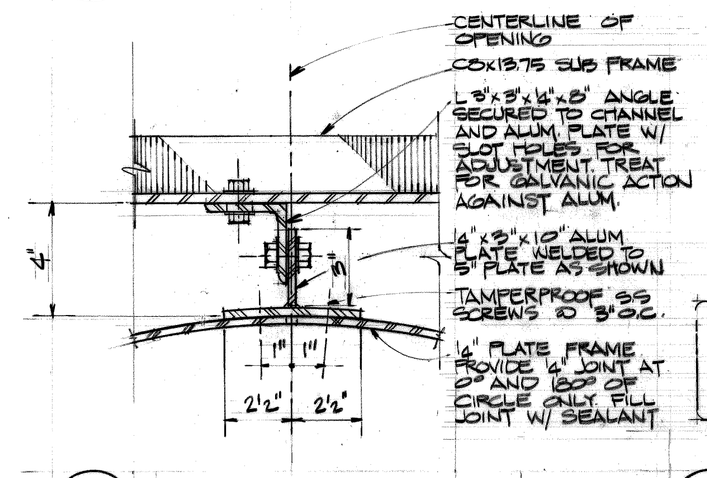

10/8 SECTION
3"=1'-0"

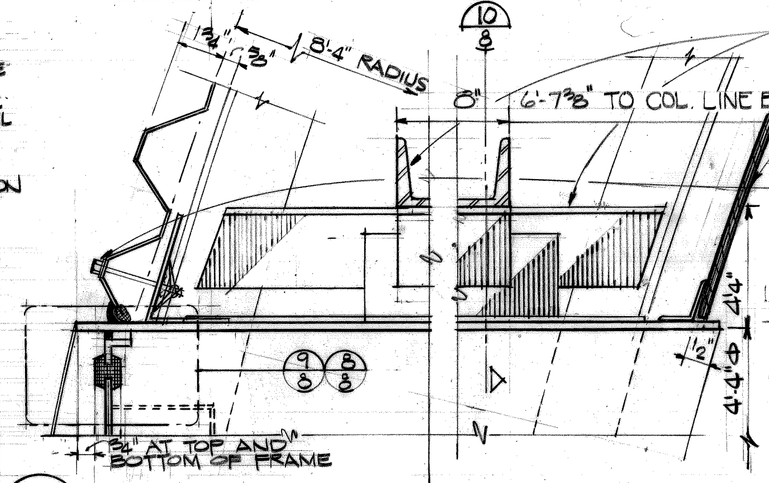

6/8 SECTION (HEAD AND SILL)
3"=1'-0"

9/8 TYPICAL GLAZING DET
HALF FULL SIZE

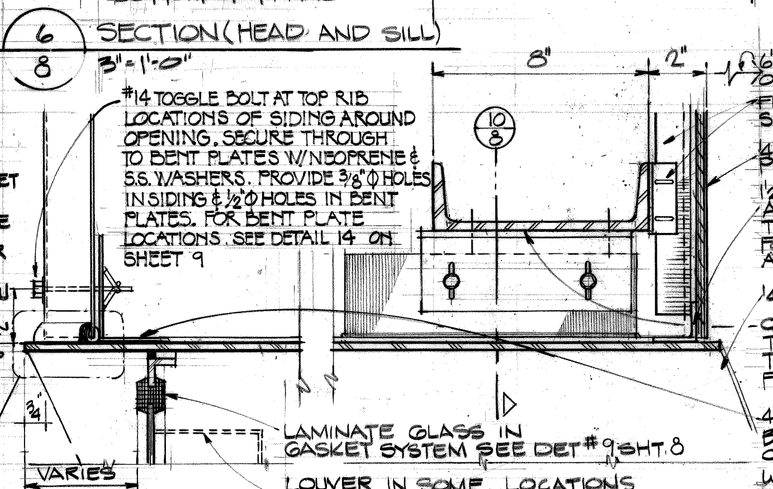

5/8 PLAN (JAMB)
3"=1'-0"

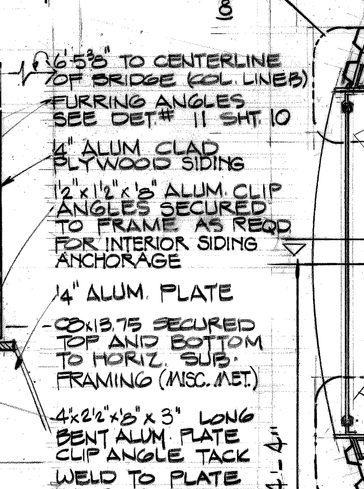

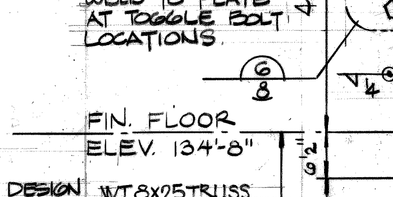

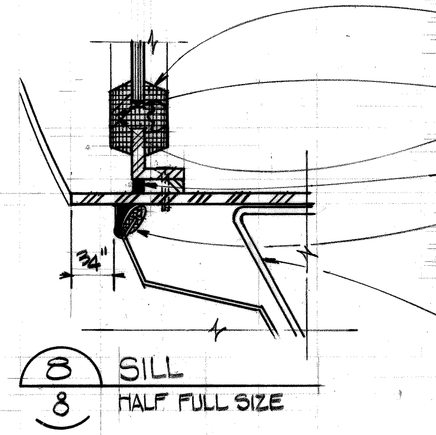

8/8 SILL
HALF FULL SIZE

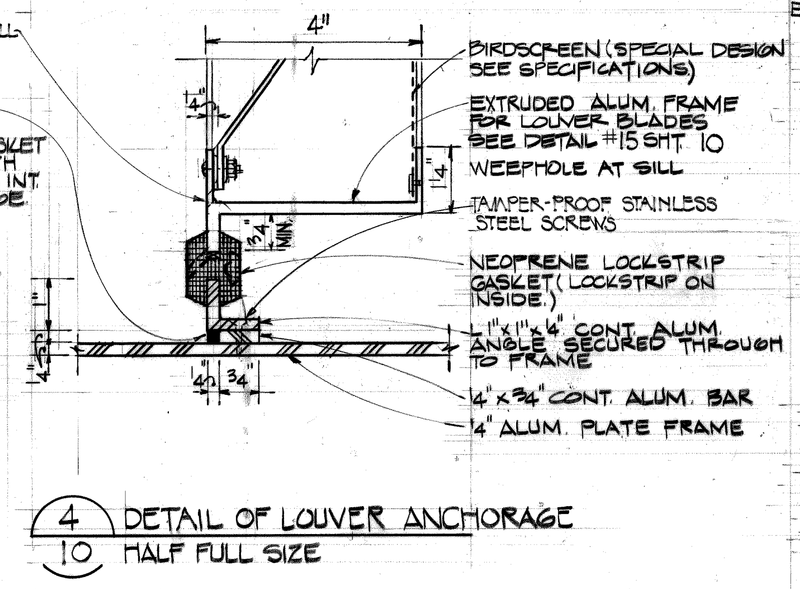

4/10 DETAIL OF LOUVER ANCHORAGE
HALF FULL SIZE

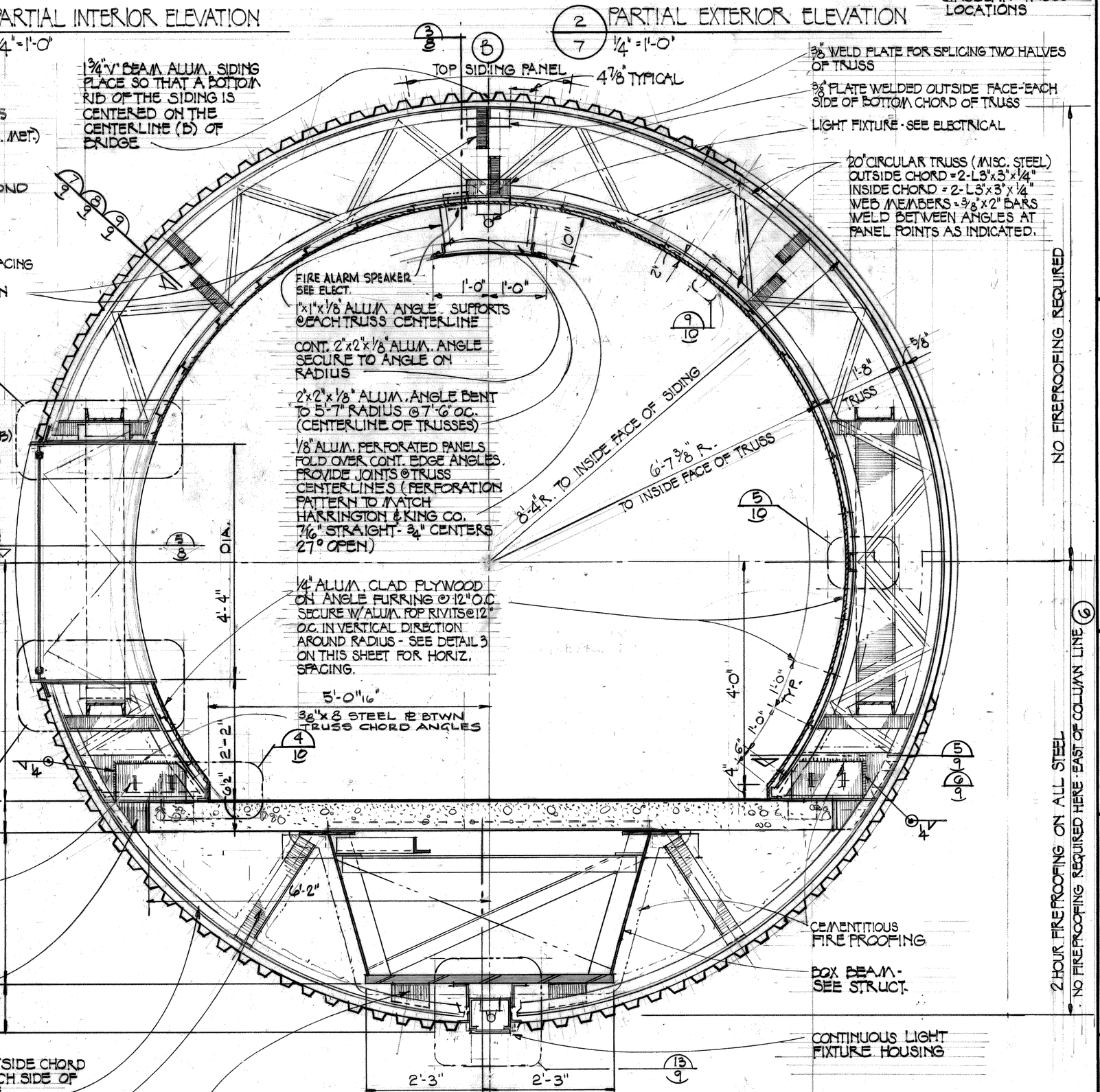

CONTINUATION OF OUTSIDE CHORD OF TRUSS, WELD EACH SIDE OF PLATES AND ANGLE
L 4"x3"x1/4" WELDED TO 3/8" PLATE ON BOX BEAM
3/8" PLATE WELDED TO BOTTOM OF BOX BEAM

1/7,8 SECTION THROUGH EAST-WEST BRIDGE
SCALE 3/4" = 1'-0"

GENERAL NOTE
ALL FIELD APPLIED FIREPROOFING, CEMENTITIOUS AND MASTIC, APPLIED TO STRUCTURAL STEEL IS TO BE AS REQ'D FOR A 2 HOUR FIRE RATING.

Joe Louis Sports Arena
Pedestrian Walkway
For City Engineering Division

SH&G
Smith, Hinchman & Grylls Associates, Inc.
Architects Engineers Planners
455 West Fort Street
Detroit, Michigan 48226
(313)964-3000

SH&G Job. No. 11732C

OWNER — 5-30-80 Issued For Date

1-18-80 Date — K.R. & D.S. Drawn By
Dir. Architect/Engineer
Correlation Check
Project Manager
Construction Administrative Div. Approval
Division Approval

Key Plan

Detail Number / Location or Detail Sheet

N

Drawing Title
DETAILS EAST-WEST BRIDGE

15031A Project No.
A-8 Drawing No.
AS NOTED Scale

9 of 96

9-26-79

MC/PRM# 71858

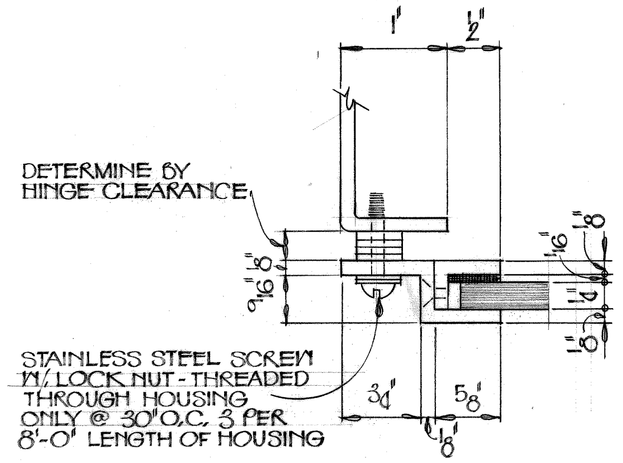

(12) SECTIONS
FULL SIZE

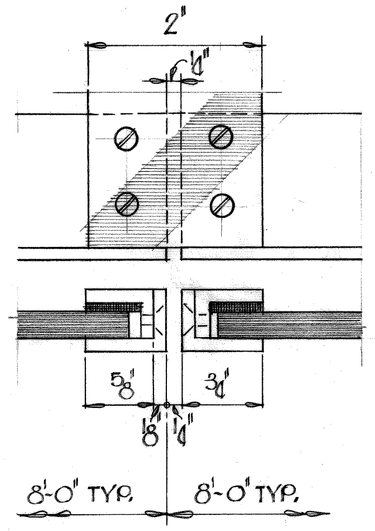

(11)

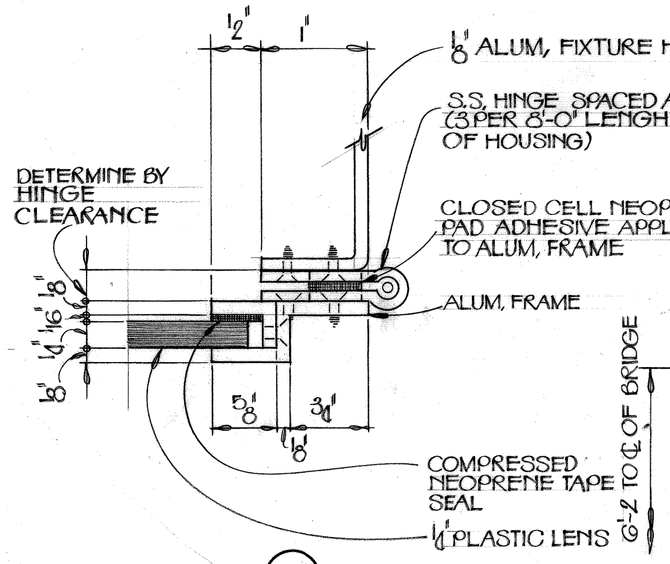

(10)

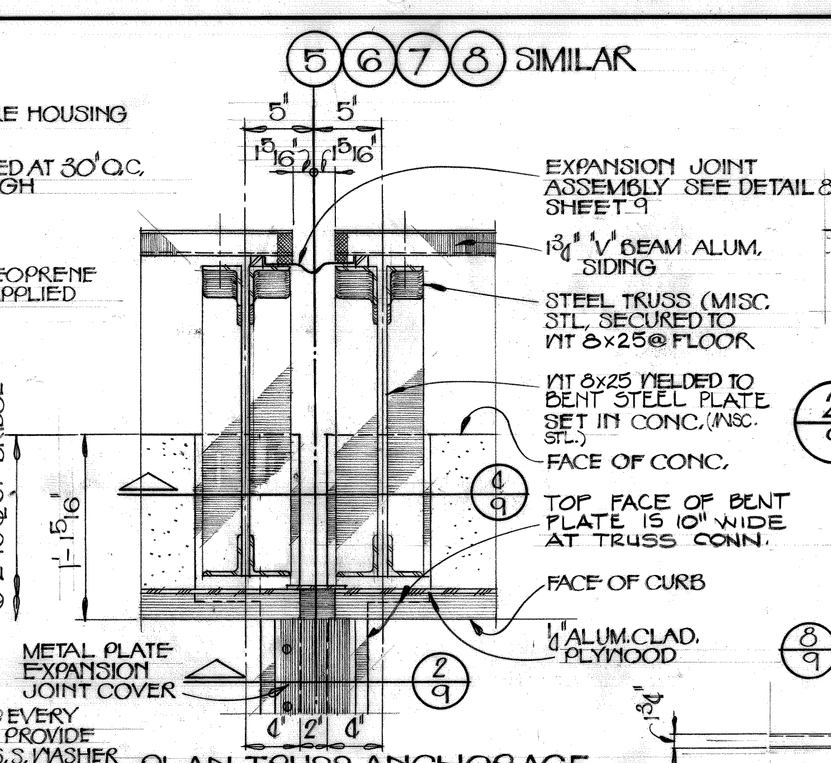

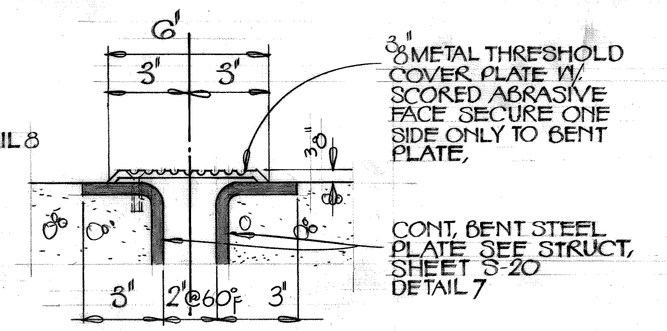

(2/9) SECTION
3"=1'-0"

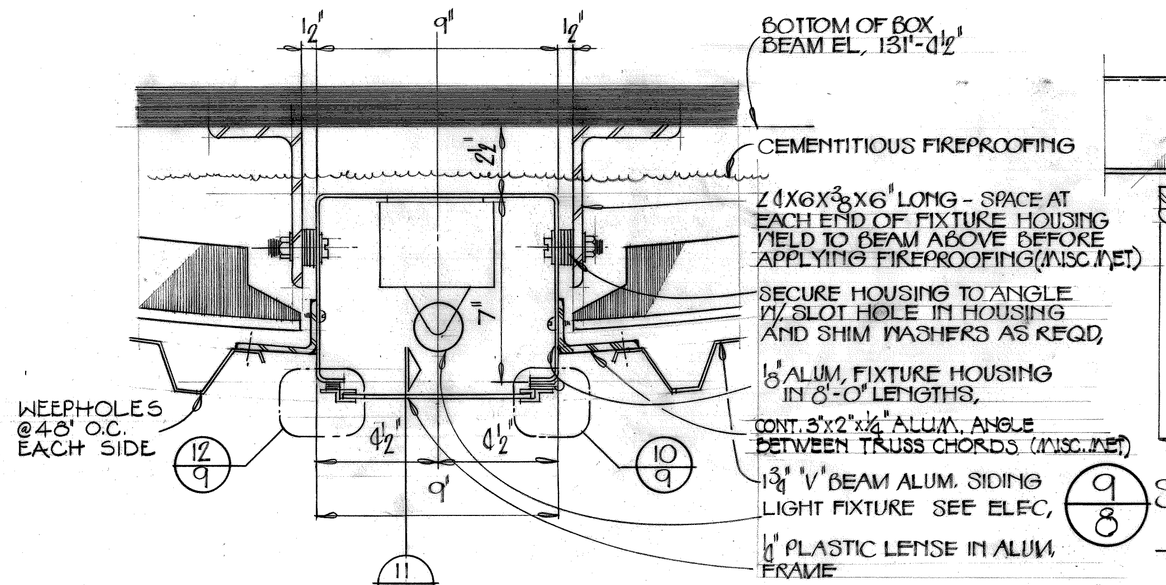

(13/8) SECTION 3"=1'-0"

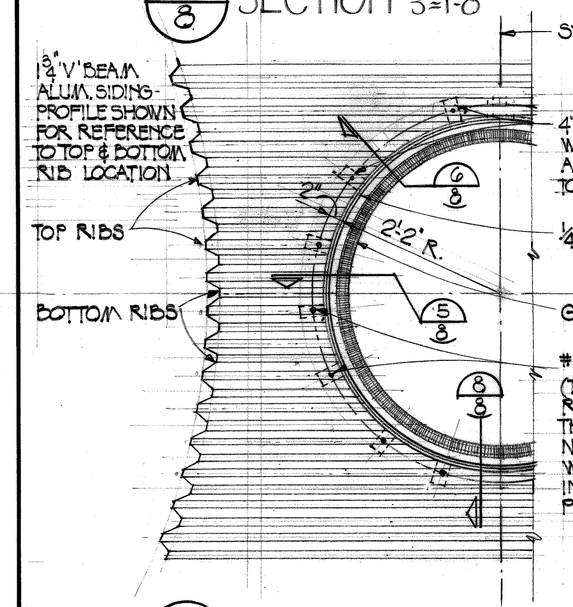

(14/8) PARTIAL EXTERIOR ELEVATION @ ROUND OPEN'G
¾"=1'-0"

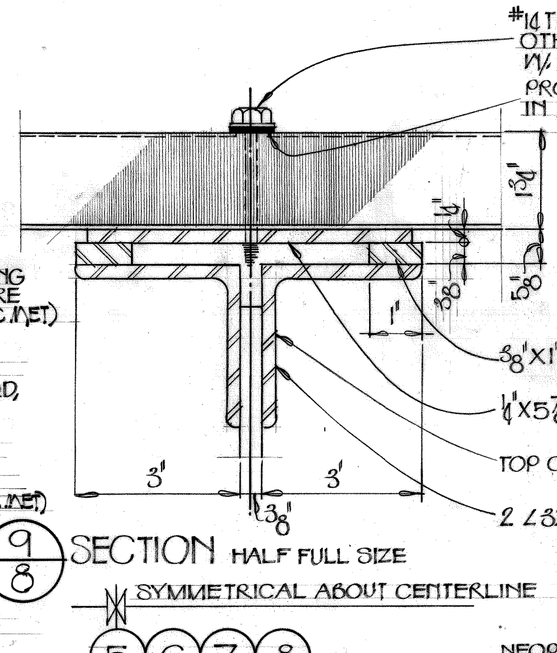

(9/8) SECTION HALF FULL SIZE

(6/8) PLAN-TRUSS ANCHORAGE TO FLOOR @ EXP. JT ½"=1'-0"

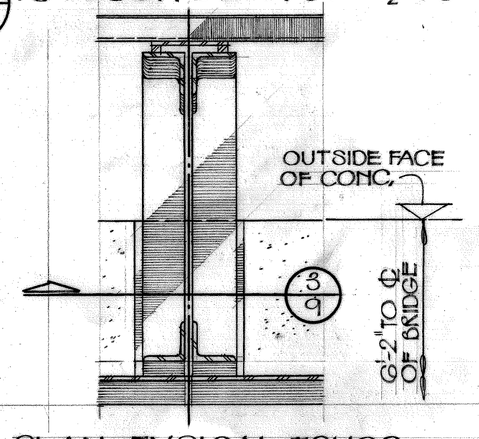

(3/9)

(5/8) PLAN-TYPICAL TRUSS ANCHORAGE TO FLOOR
½"=1'-0"

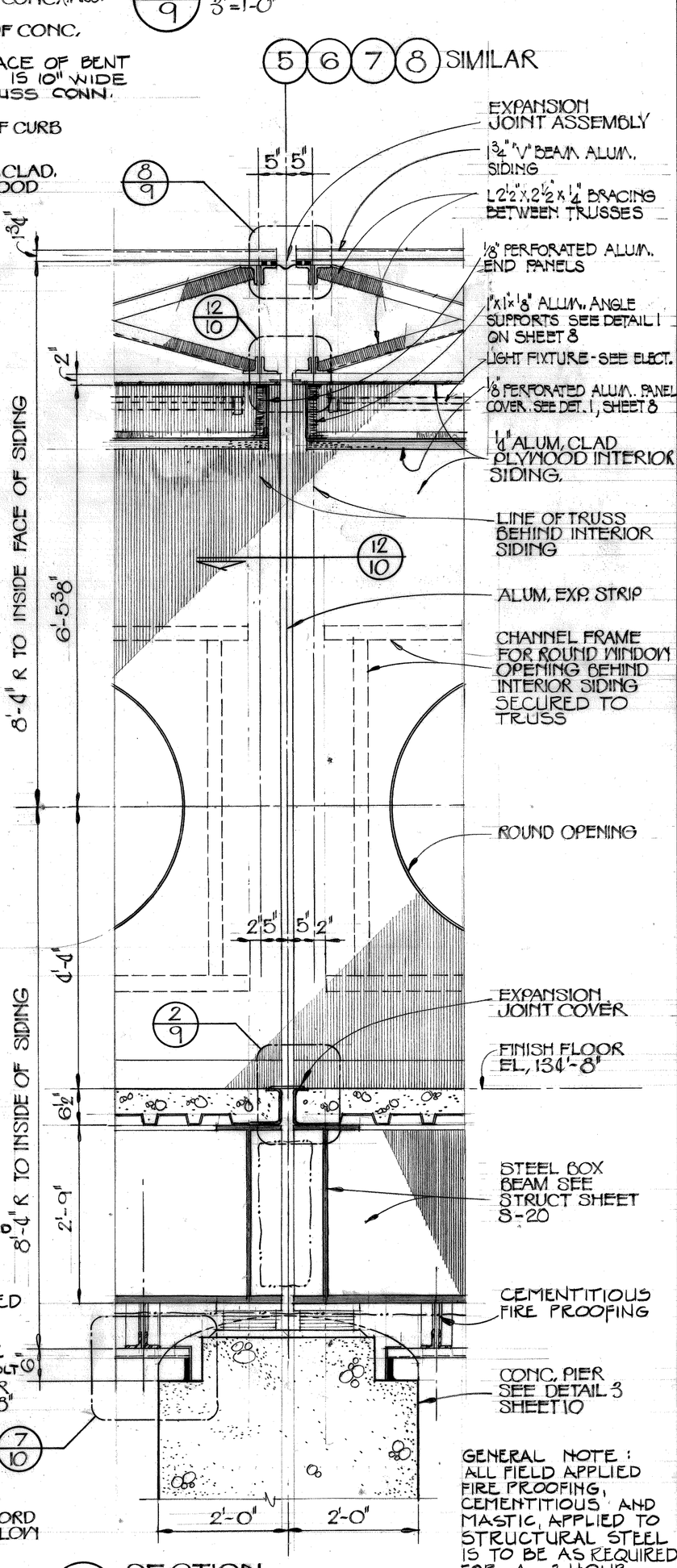

(1/9) SECTION
¾"=1'-0"

GENERAL NOTE: ALL FIELD APPLIED FIRE PROOFING, CEMENTIOUS AND MASTIC, APPLIED TO STRUCTURAL STEEL IS TO BE AS REQUIRED FOR A 2 HOUR FIRE RATING

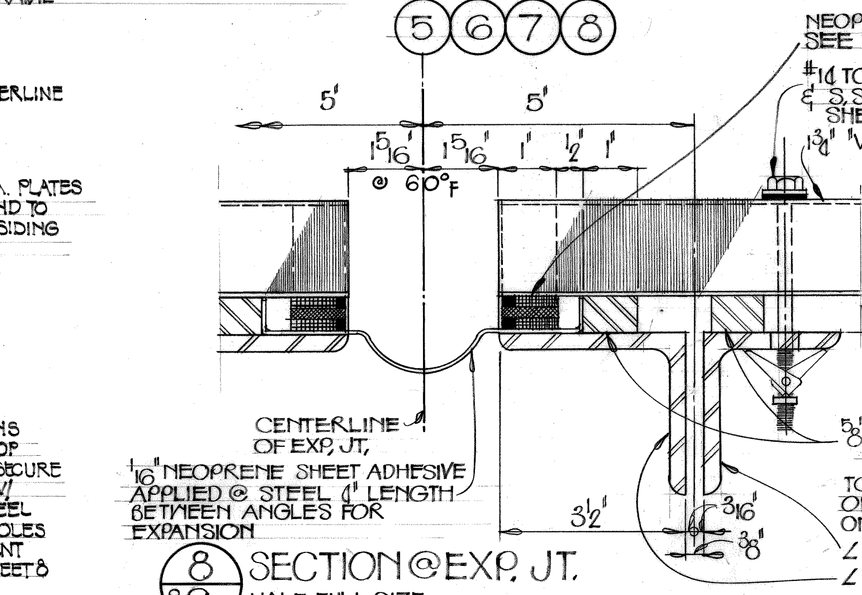

(8/8,9) SECTION @ EXP. JT.
HALF FULL SIZE

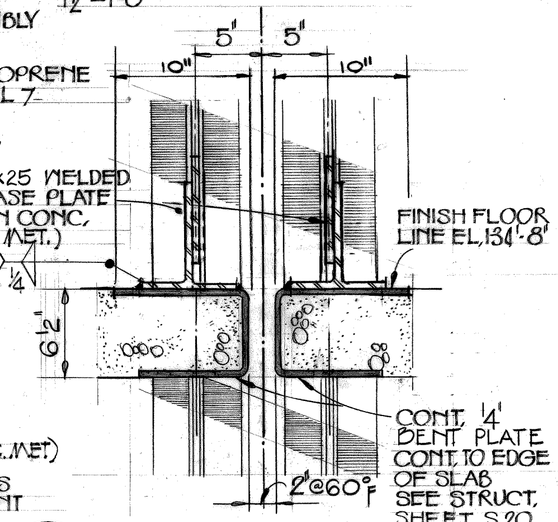

(4/9) SECTION
1½"=1'-0"

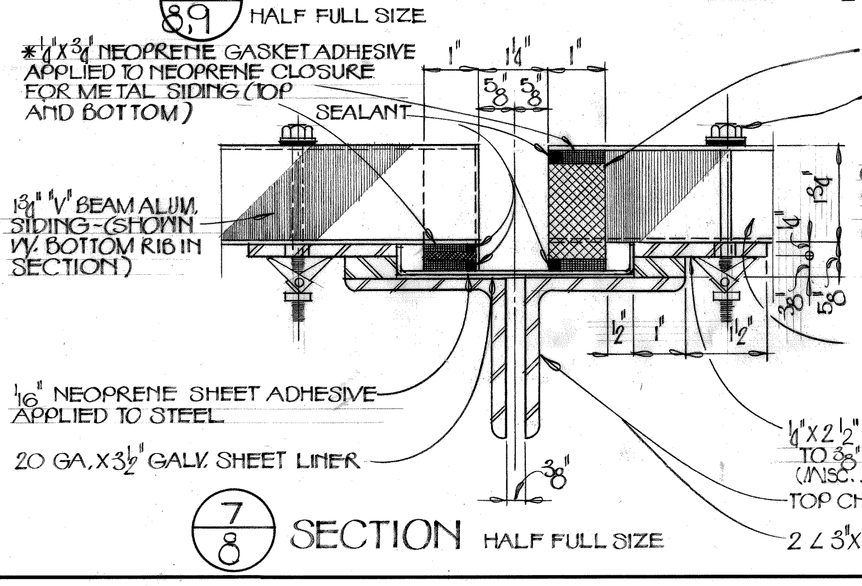

(7/8) SECTION HALF FULL SIZE

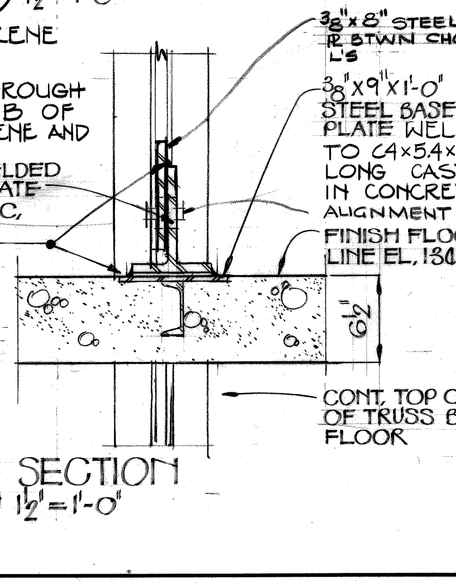

(3/9) SECTION
½"=1'-0"

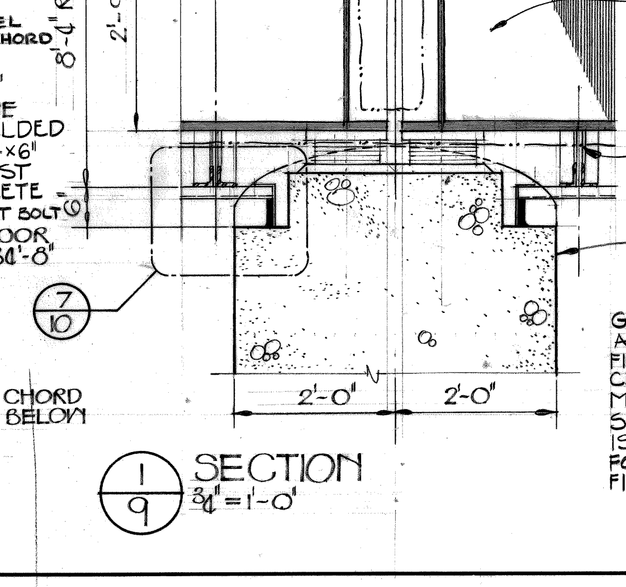

(7/10)

Joe Louis Sports Arena
Pedestrian Walkway
For City Engineering Division

SH&G
Smith, Hinchman & Grylls Associates, Inc.
Architects Engineers Planners
455 West Fort Street
Detroit, Michigan 48226
(313)964-3000

SH&G Job. No. 11732C

OWNER Issued For — 5-30-80 Date

1-18-80 Date — B. J.R. Drawn By

Div. Architect/Engineer

Correlation Check

Project Manager

Construction Administrative Div. Approval

Division Approval

Key Plan

Detail Number / Location or Detail Sheet

N

Drawing Title
DETAILS EAST-WEST BRIDGE

15031A Project No.

A-9 Drawing No.

Scale

10 of 96

9-26-79

MC/PRM# 71858

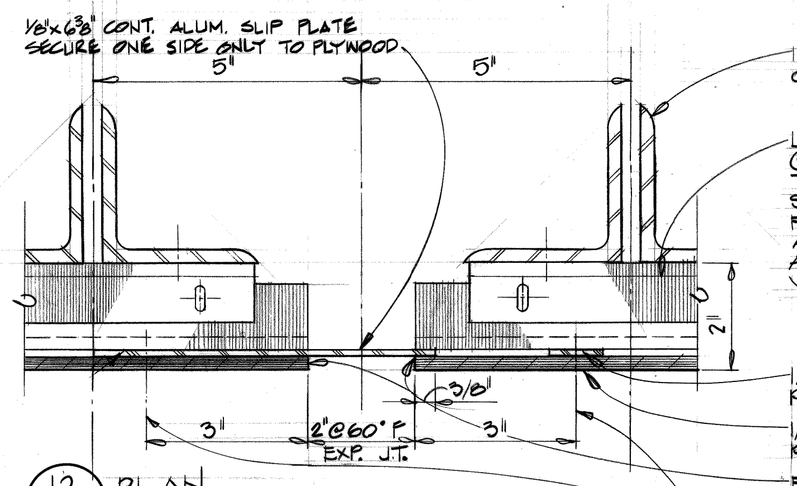

INSIDE CHORD OF TRUSS

L 1 1/4" x 1" x 1/4" x 1/4" x 6" LONG (STEEL) SECURE TO TRUSS. PROVIDE SLOT HOLES. TREAT FOR SECURING TO ALUM. FURRING ANGLE FOR GALVANIC ACTION.

1/8" x 1" CONT. ALUM. PLATE

1/4" ALUM. CLAD PLYWOOD

FILL AND PAINT PLYWOOD EDGES FLAT BLACK

ALUM. POP RIVETS @ 12" O.C. VERT.

12 / 8,9 PLAN
HALF FULL SCALE

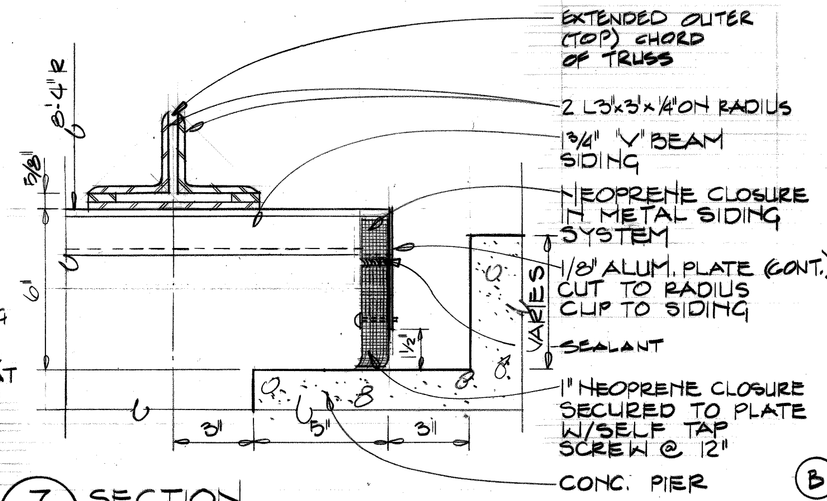

7 / 10 SECTION
3" = 1'-0"

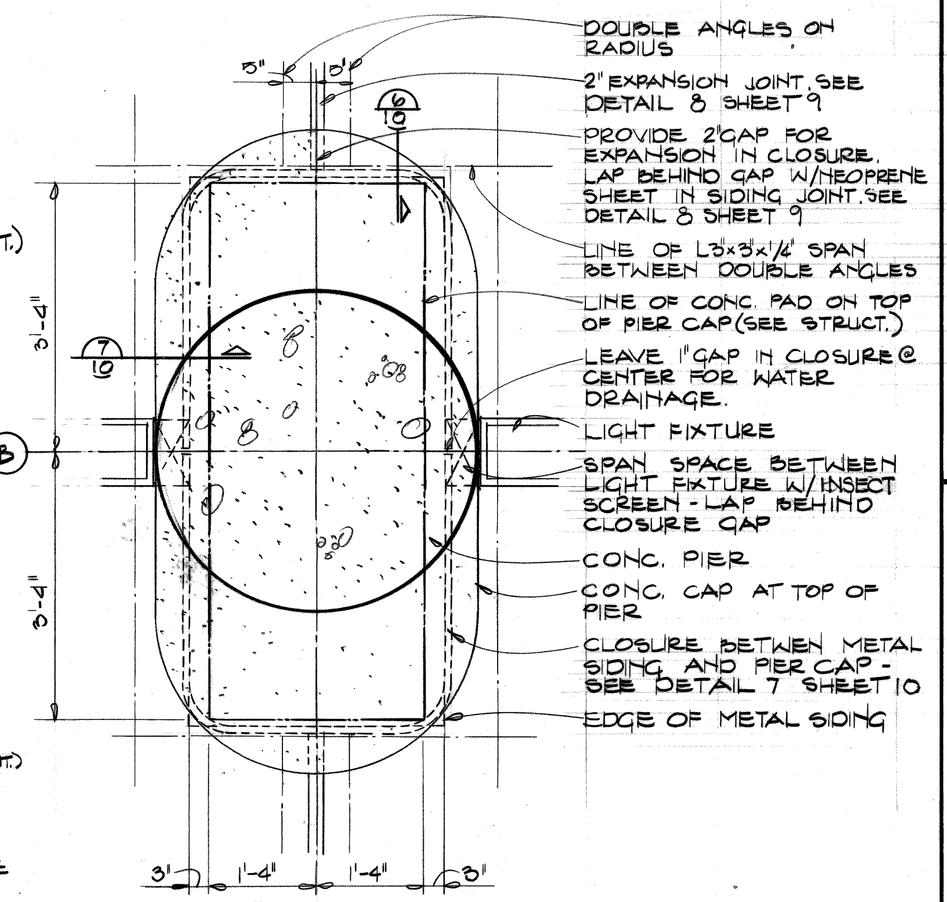

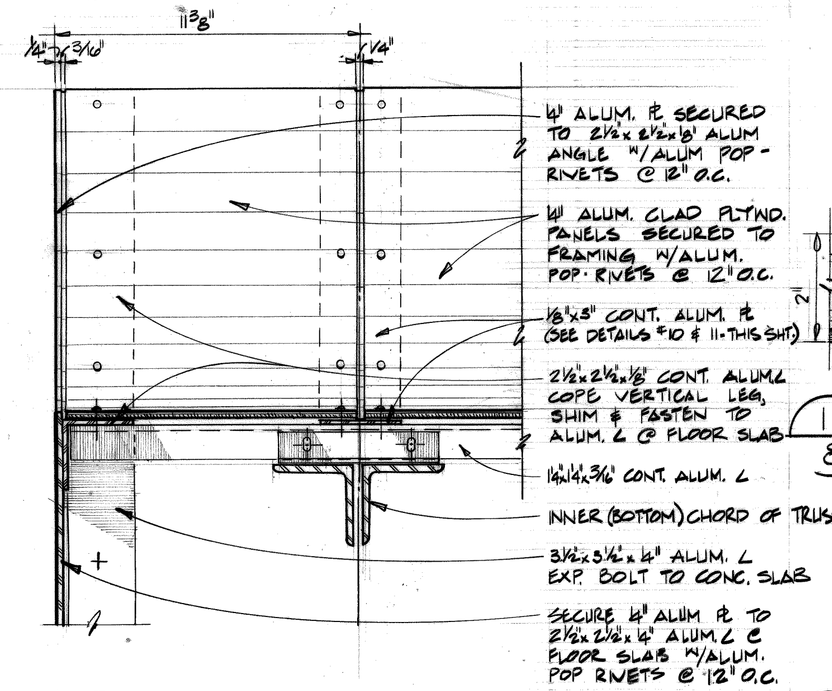

16 / 2,5 PLAN
3" = 1'-0"

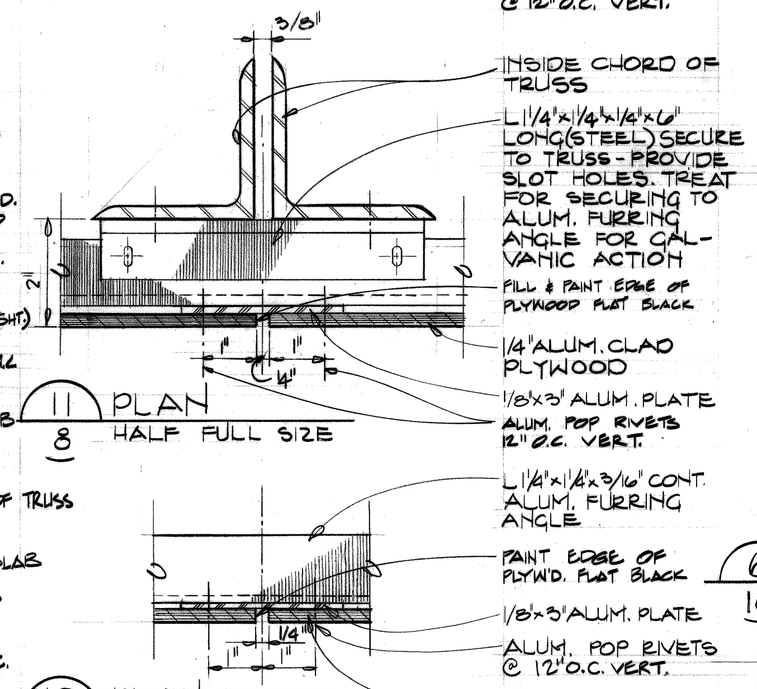

11 / 8 PLAN
HALF FULL SIZE

10 / 8 PLAN
HALF FULL SIZE

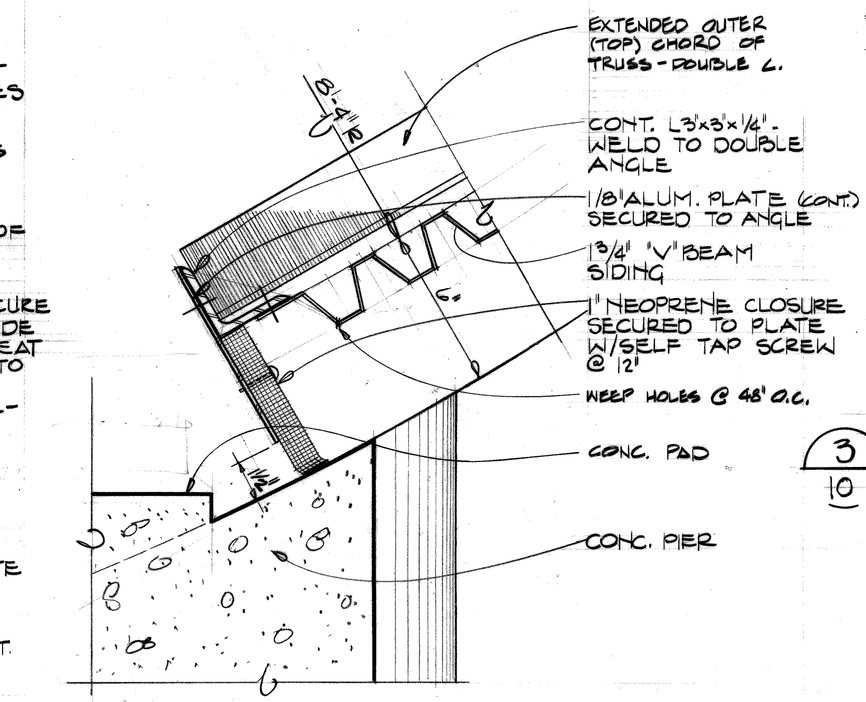

6 / 10 SECTIONS
3" = 1'-0"

3 / 10 SECTION THROUGH PIER LOOKING @ UNDERSIDE OF BRIDGE
3/4" = 1'-0"

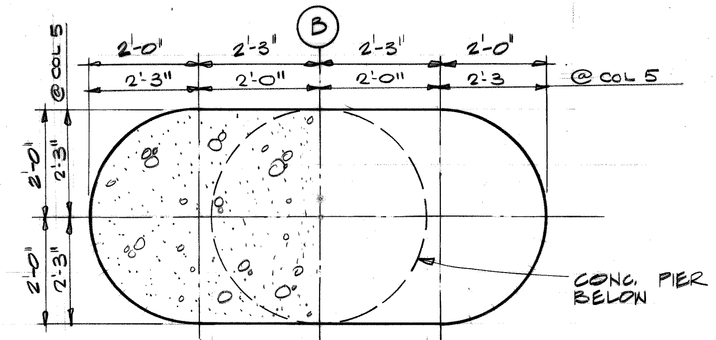

2 / 10 PLAN SECTION
1/2" = 1'-0"

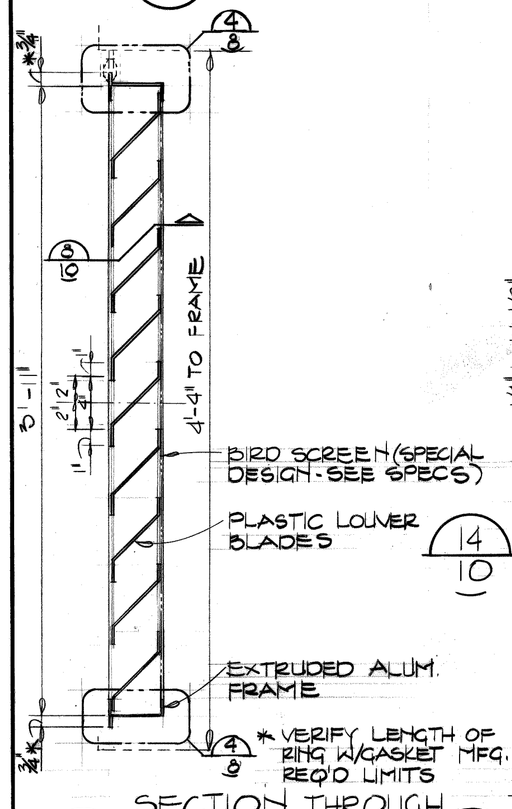

15 / 8 SECTION THROUGH PLASTIC LOUVER
1 1/2" = 1'-0"

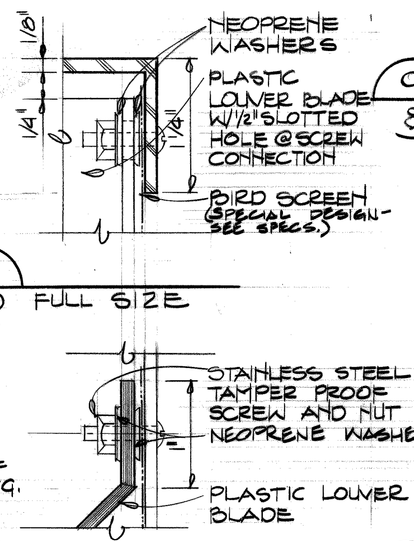

14 / 10 FULL SIZE

13 / 10 FULL SIZE

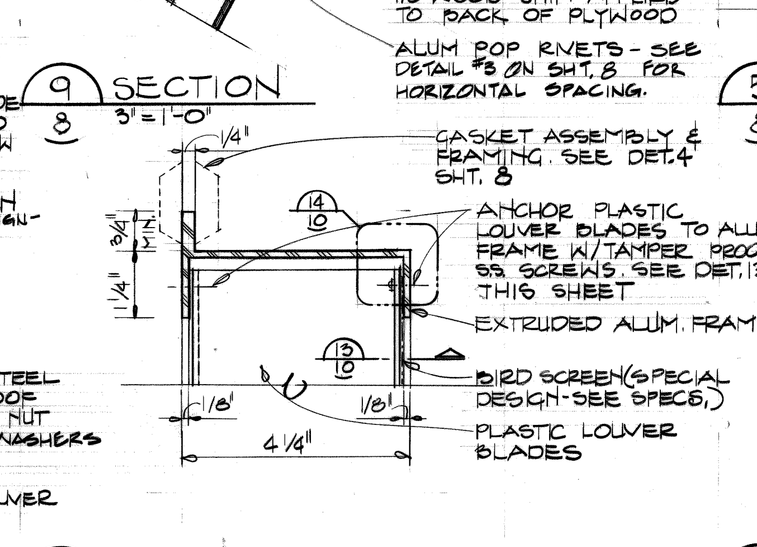

8 / 10 JAMB - BLADE CONNECTION
HALF FULL SIZE

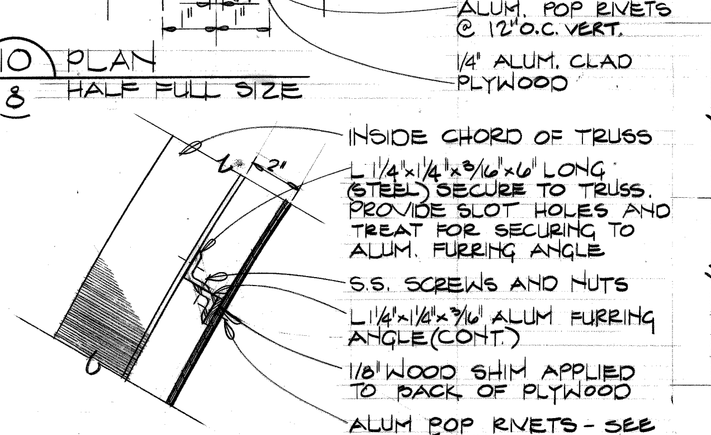

5 / 8 SECTION
3" = 1'-0"

9 / 8 SECTION
3" = 1'-0"

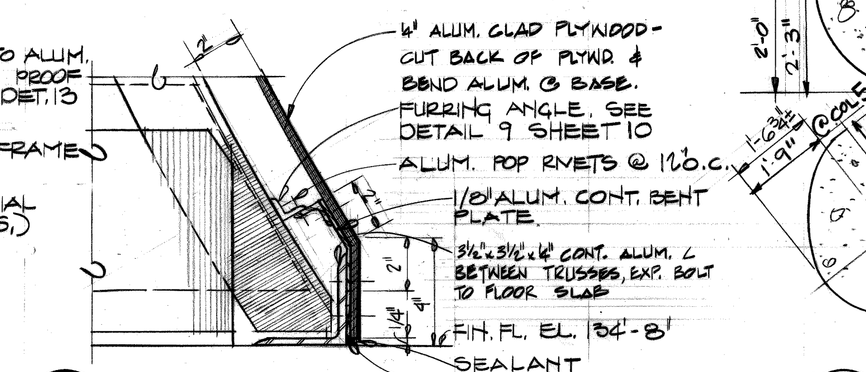

4 / 8 SECTION
3" = 1'-0"

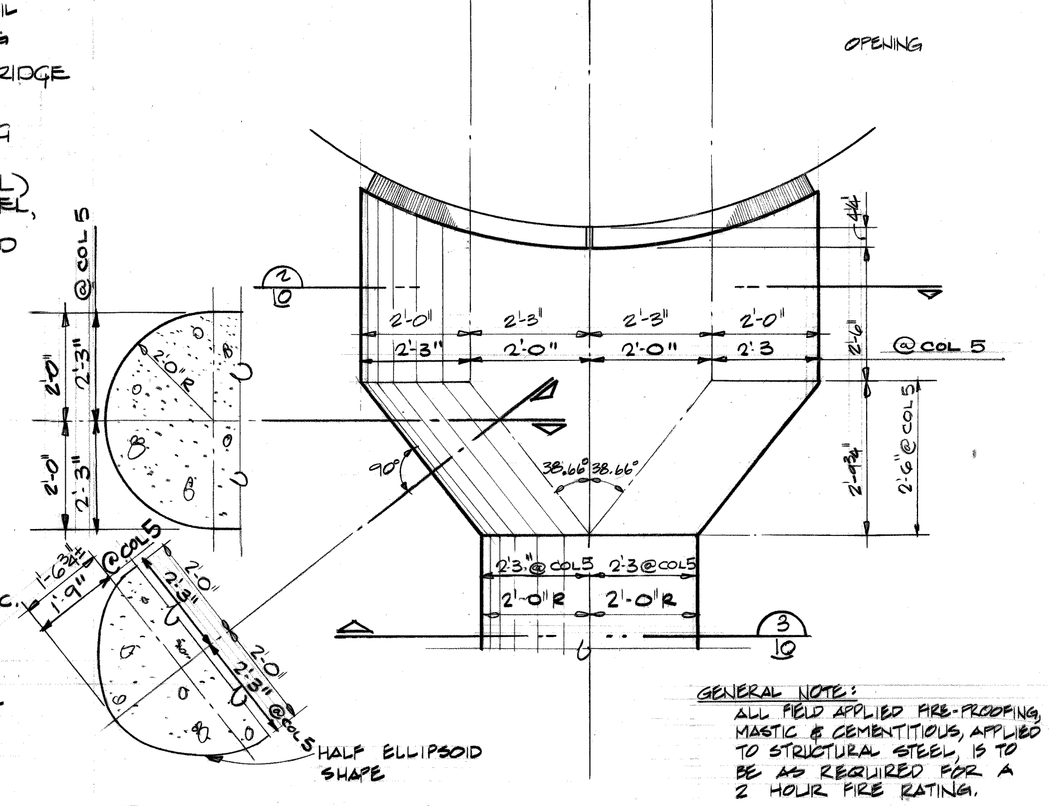

1 / 7 CONC COL. CAP
1 1/2" = 1'-0"

GENERAL NOTE:
ALL FIELD APPLIED FIRE-PROOFING, MASTIC & CEMENTITIOUS, APPLIED TO STRUCTURAL STEEL, IS TO BE AS REQUIRED FOR A 2 HOUR FIRE RATING.

Joe Louis Sports Arena

Pedestrian Walkway

For City Engineering Division

SH&G
Smith, Hinchman & Grylls Associates, Inc.
Architects Engineers Planners
455 West Fort Street
Detroit, Michigan 48226
(313)964-3000

SH&G Job. No. 11732C

OWNER — Issued For — 5-30-80 Date

1-18-80 Date — B Drawn By — D.S.

By. Architect/Engineer

Correlation Check

Project Manager

Construction Administrative Div. Approval

Division Approval

Key Plan

Detail Number / Location or Detail Sheet

N

Drawing Title
DETAILS EAST-WEST BRIDGE

15031A Project No.

A-10 Drawing No.

AS NOTED Scale

11 of 96

9-26-79

MC/PRM• 71858

13 SECTION @ 90° & 270° OF CIRCLE
11 — 3/4"=1'-0"

7 SECTION
11,12 — 3"=1'-0"

12 TYPICAL MULLION
11 — 3"=1'-0"

6 SECTION
11,12 — 3"=1'-0"

10 / 11

8 HALF FULL SIZE
11

9 SECTION
11,12 — 3"=1'-0"

5 PLAN SECTION @ 0° & 180° OF CIRCLE
12 — 3"=1'-0"

4 SECTION
11 — 3"=1'-0"

3 SECTION
11,14 — 3/4"=1'-0"

2 PARTIAL PLAN OF EAST-WEST BRIDGE/TOWER CONNECTION
14,18 — 1/4"=1'-0"
STAIR/ELEVATOR TOWER -- AS SHOWN
RAMP TOWER - - - - - - - - SHOWN OPPOSITE HAND

1 PARTIAL ELEVATION OF RING @ TOWER CONNECTION
7 — 1/4"=1'-0"
STAIR/ELEVATOR TOWER - WEST ELEVATION
RAMP TOWER ------ EAST ELEVATION

Joe Louis Sports Arena

Pedestrian Walkway

For City Engineering Division

SH&G
Smith, Hinchman & Grylls Associates, Inc.
Architects Engineers Planners
455 West Fort Street
Detroit, Michigan 48226
(313)964-3000

SH&G Job. No. 11732C

OWNER — Issued For — 5-30-80 Date

1-18-80 Date — Drawn By

Div. Architect/Engineer

Correlation Check

Project Manager

Construction Administrative Div. Approval

Division Approval

Key Plan

Detail Number / Location or Detail Sheet

N

Drawing Title
DETAILS CONNECTION EAST-WEST BRIDGE TO STAIR-ELEVATOR TOWER

15031A Project No.

A-11 Drawing No.

AS NOTED Scale

12 OF 96

9-26-79

MC/PRM# 71858

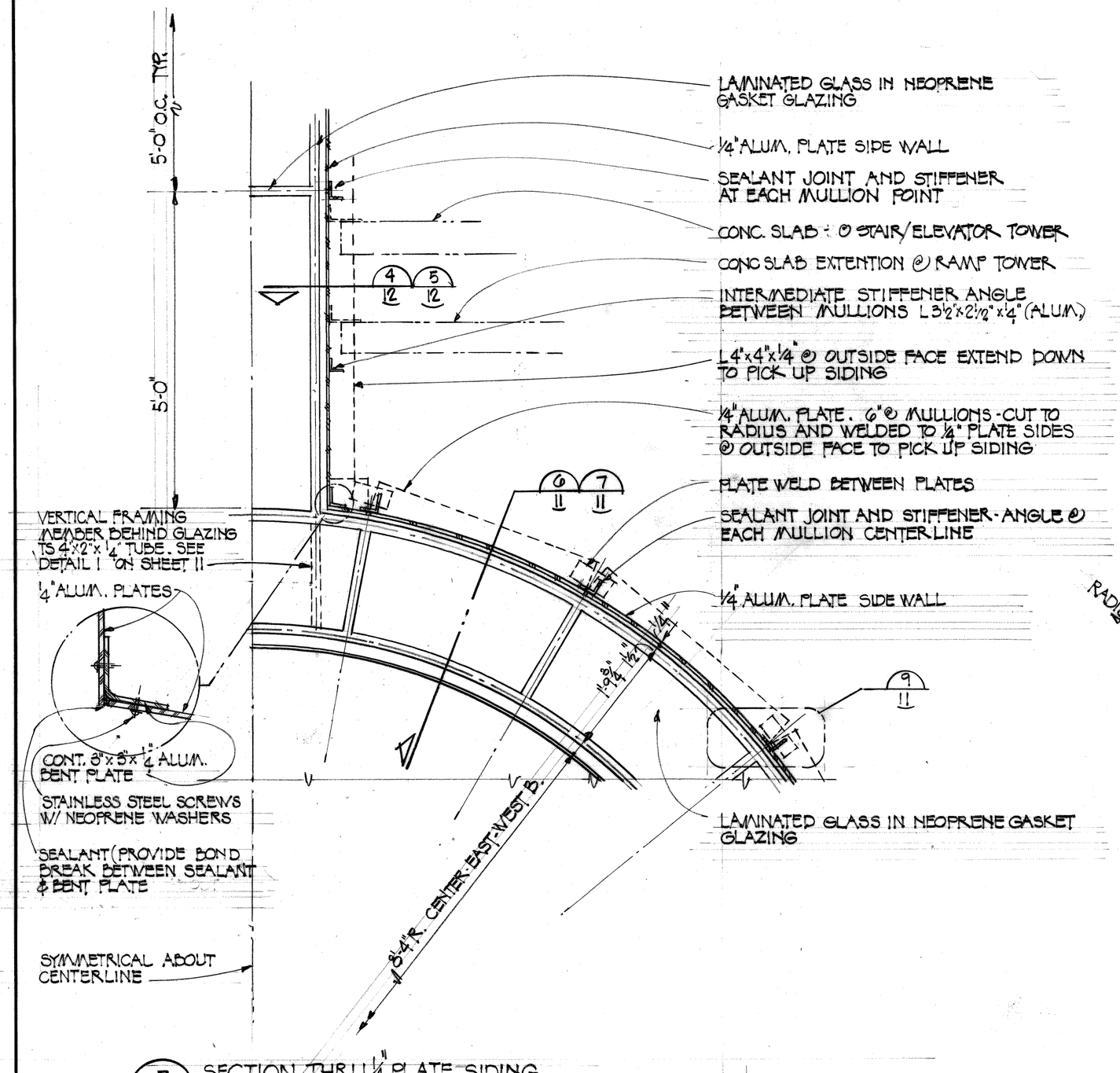

7 SECTION THRU ¼ PLATE SIDING
11 3/4"=1'-0"

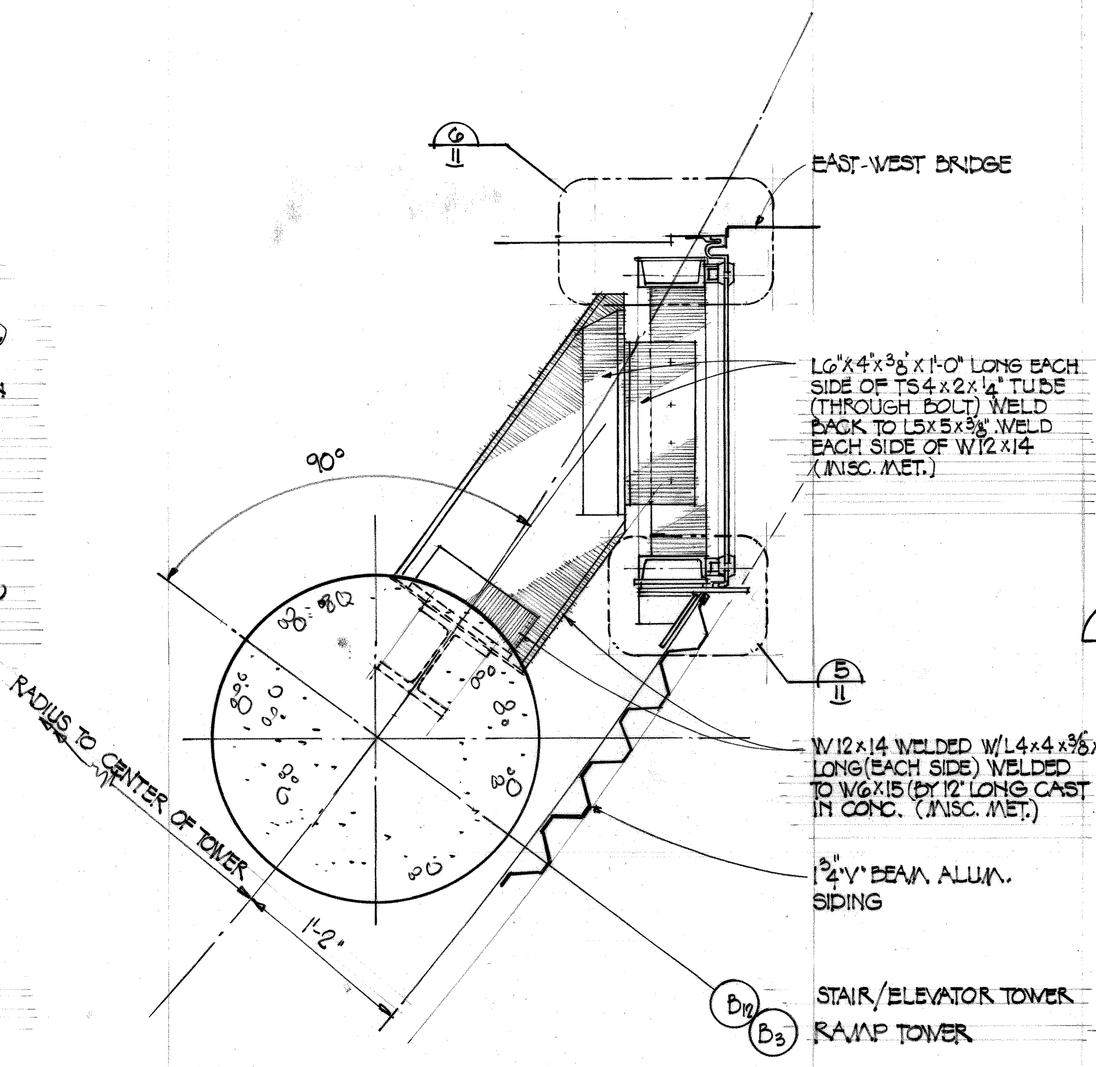

6 PLAN SECTION @ 0° & 180° OF CIRCLE
11

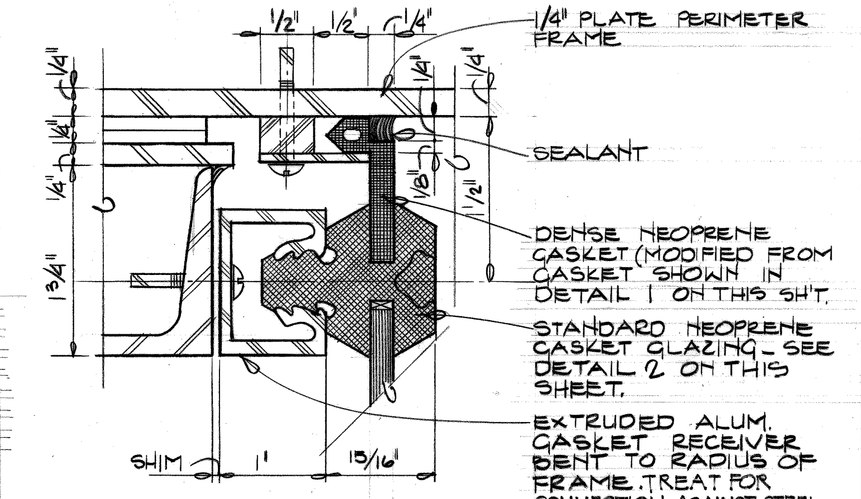

3 FULL SCALE
11,12

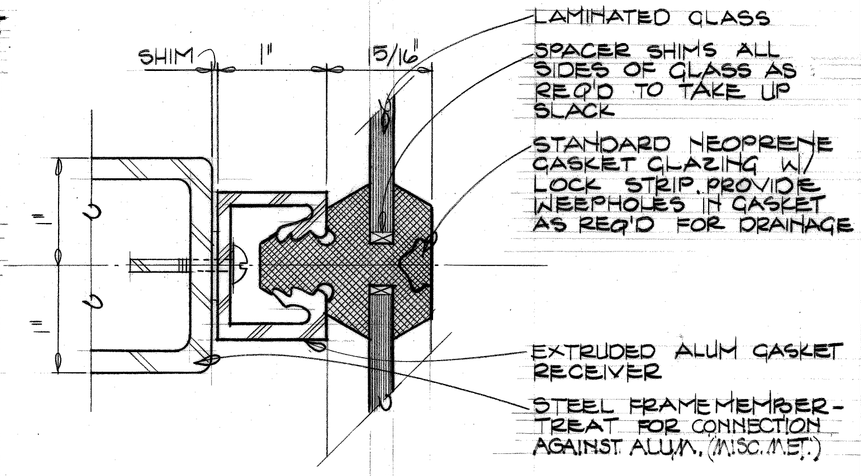

2 FULL SCALE
11

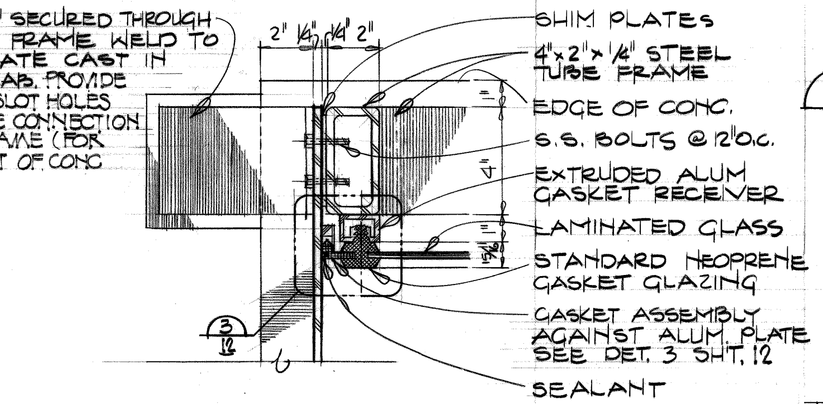

5 PLAN @ GLAZING
12,16 3"=1'-0"

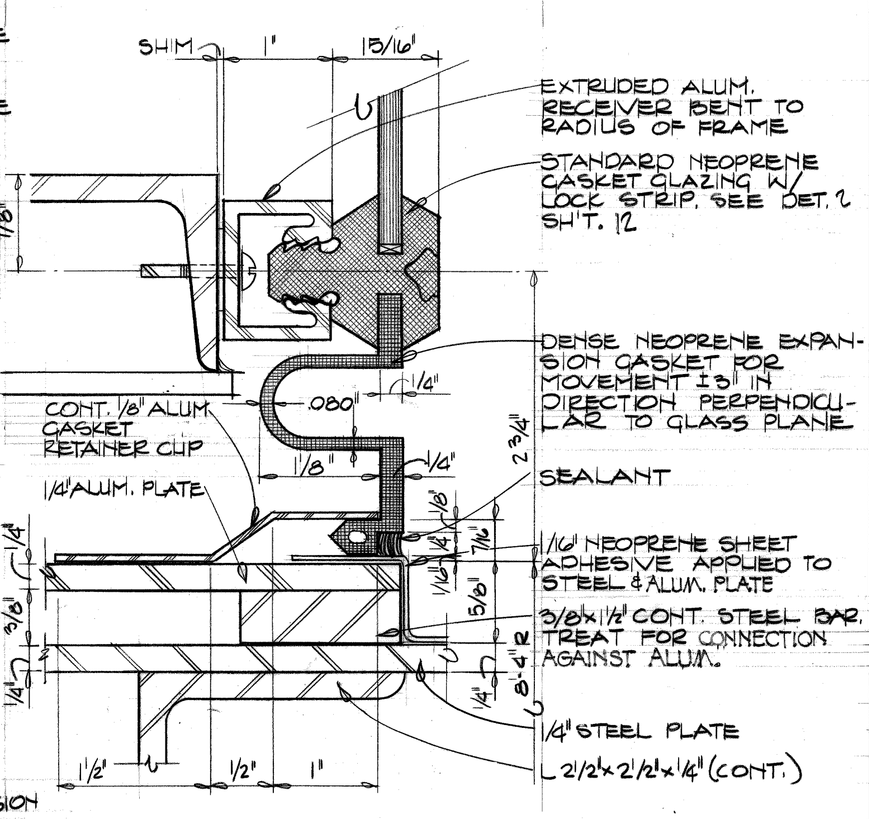

1 FULL SCALE
11

4 PLAN IN FRONT OF GLAZING
12,16 3"=1'-0"

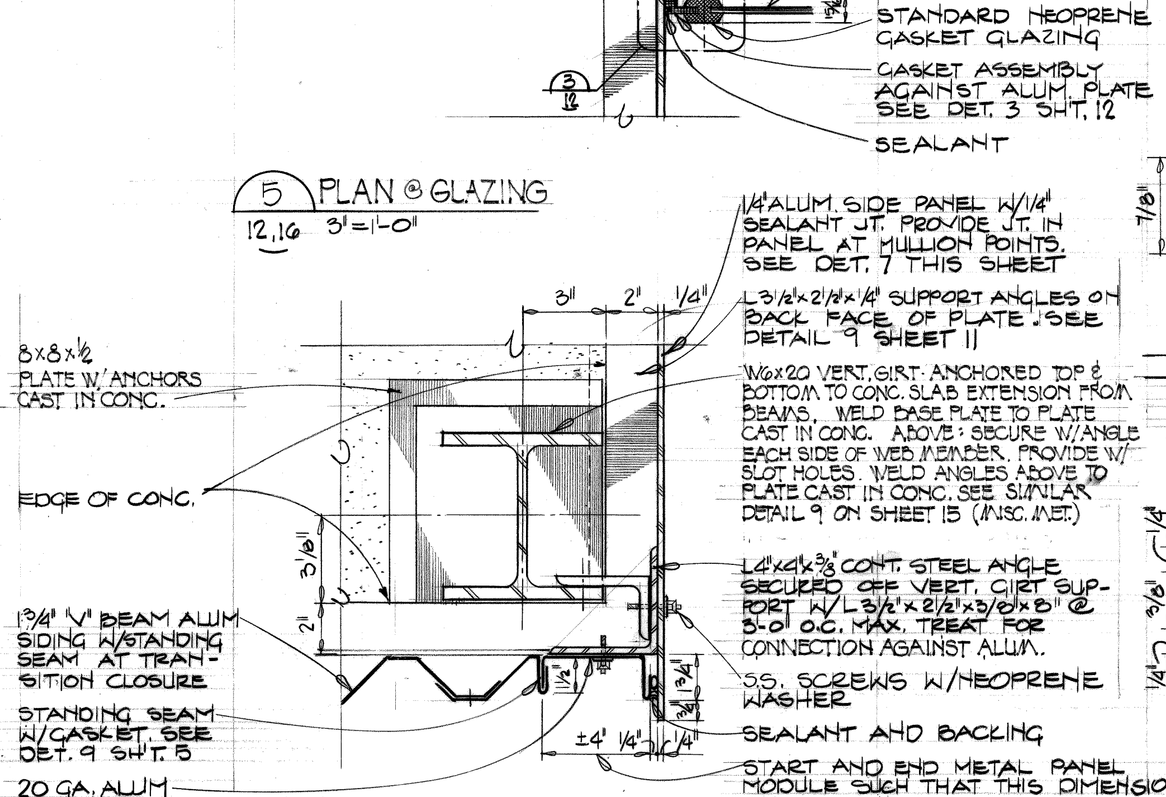

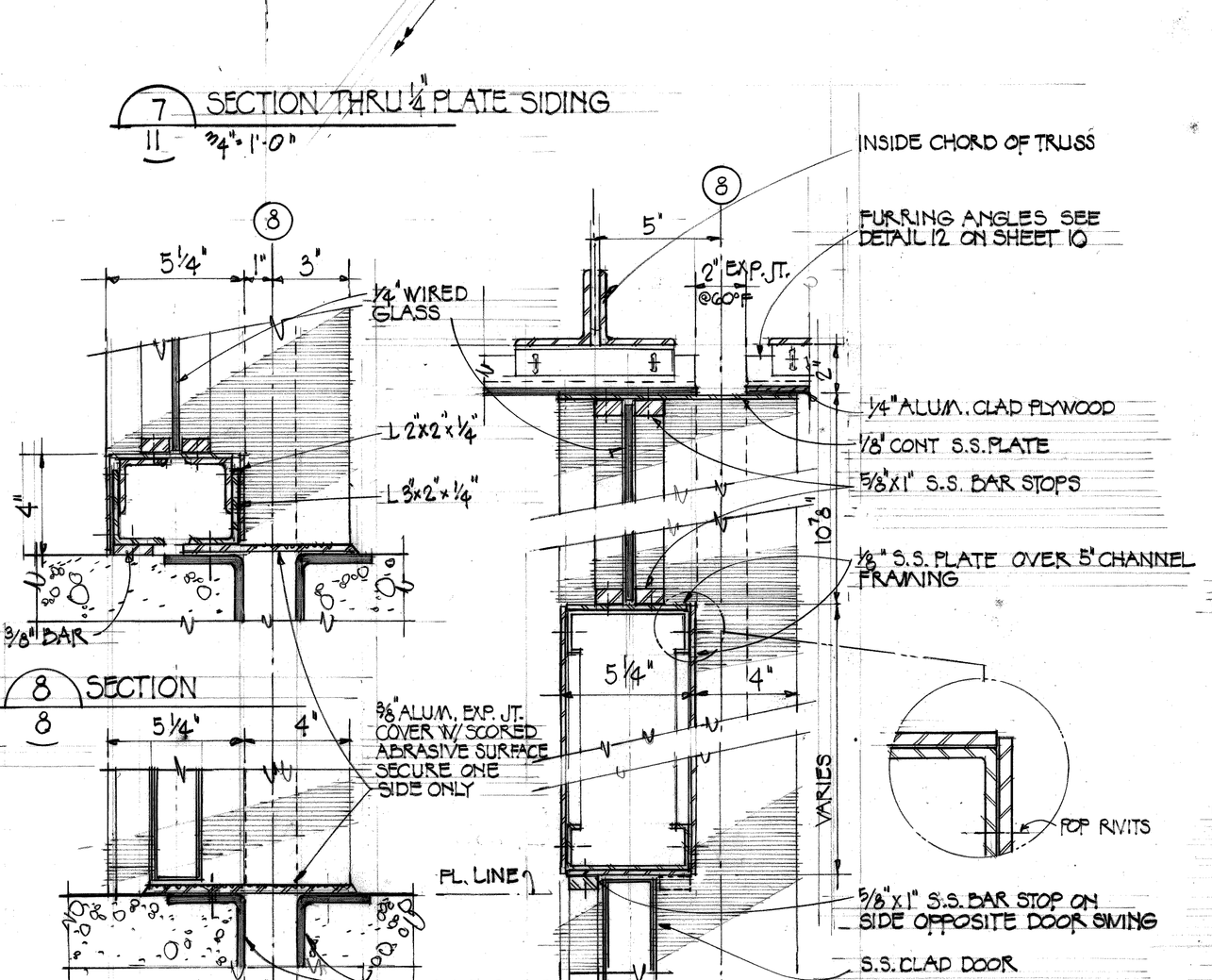

8 SECTION
8 3"=1'-0"

9 SECTION
8 3"=1'-0"

10 HEAD & JAMB
8 3"=1'-0"

Joe Louis Sports Arena

Pedestrian Walkway

For City Engineering Division

SH&G
Smith, Hinchman & Grylls Associates, Inc.
Architects Engineers Planners
455 West Fort Street
Detroit, Michigan 48226
(313)964-3000

SH&G Job. No. 11732C

OWNER	5-30-80
Issued For	Date
1-18-80	TB
Date	Drawn By
J. Mitch	
Div. Architect/Engineer	
Correlation Check	
Project Manager	
Construction Administrative Div. Approval	
Division Approval	

Key Plan

Detail Number / Location or Detail Sheet

N

Drawing Title
DETAILS EAST-WEST BRIDGE CONNECTION

15031A
Project No.
A-12
Drawing No.
AS NOTED
Scale

13 OF 56

9-26-79

MC/PRM# 71888

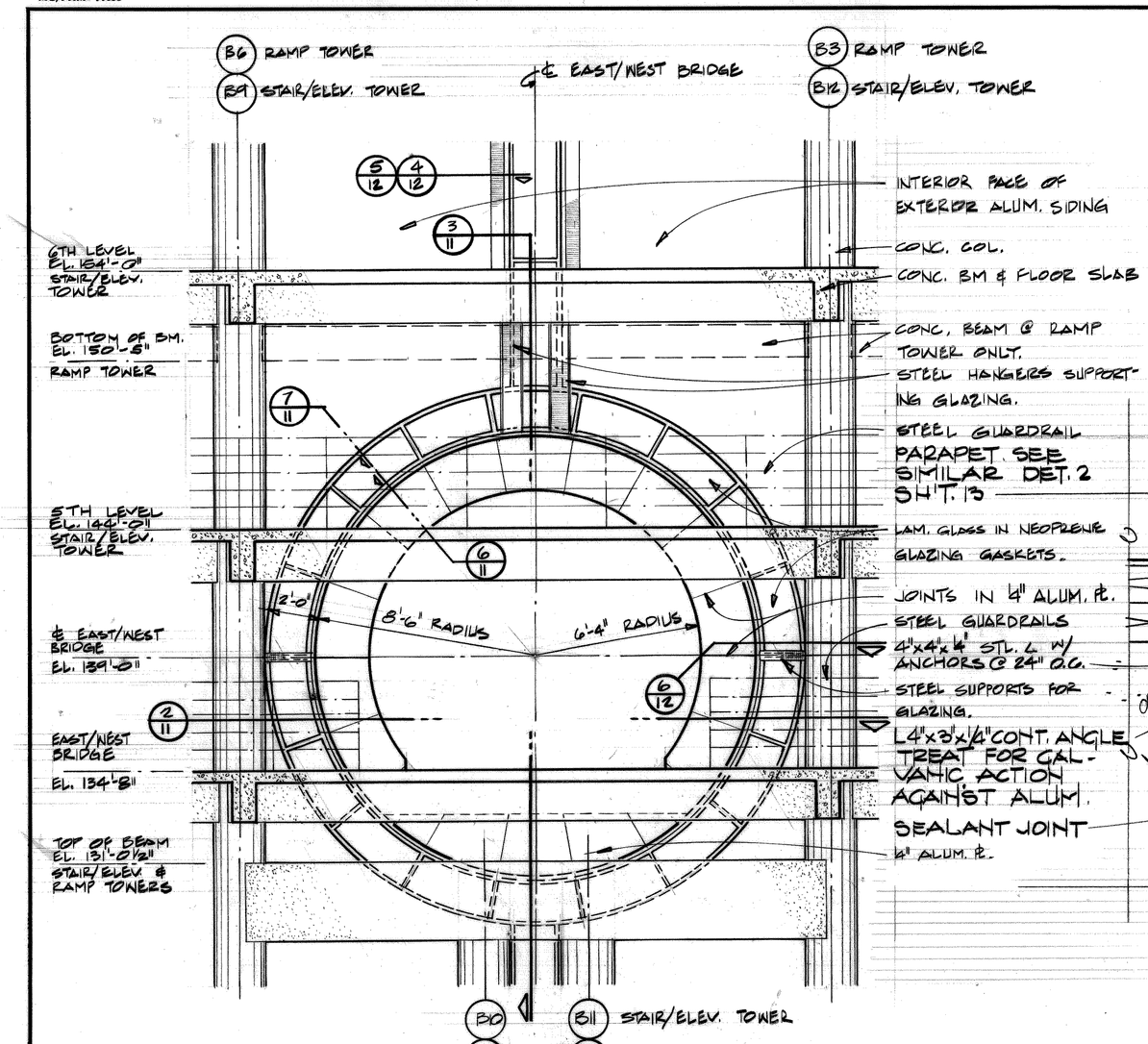

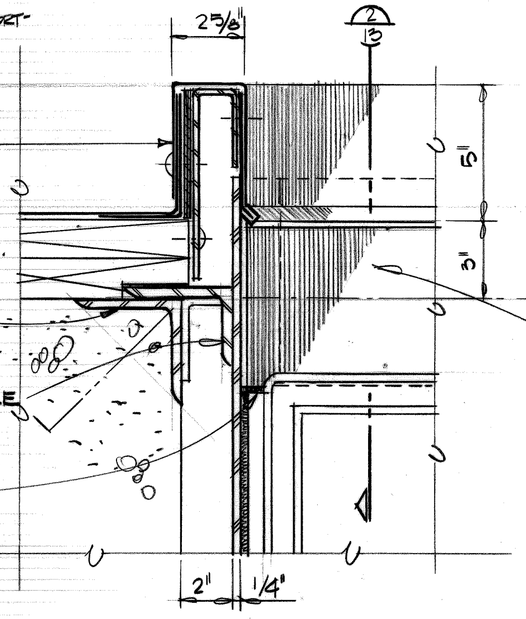

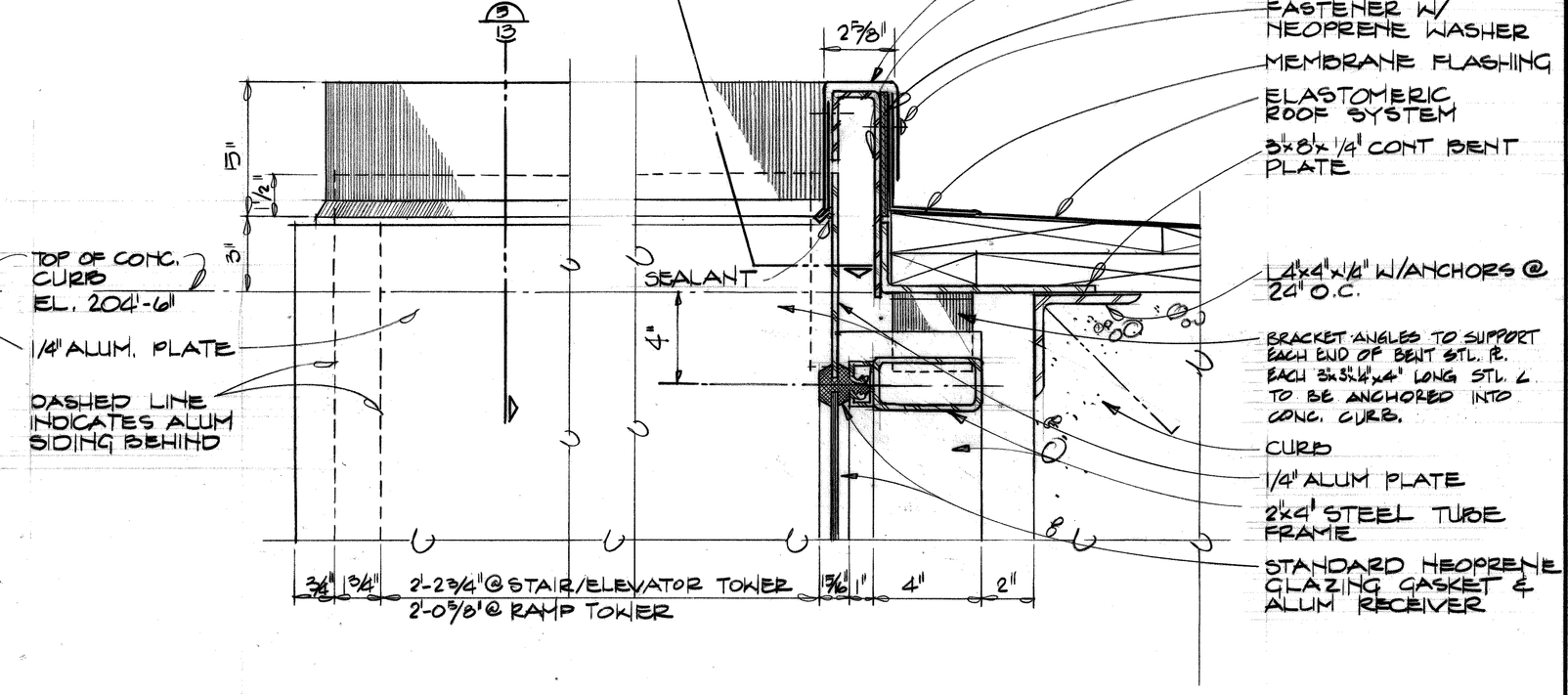

6/11 SECTION / ELEVATION
1/4" = 1'-0"

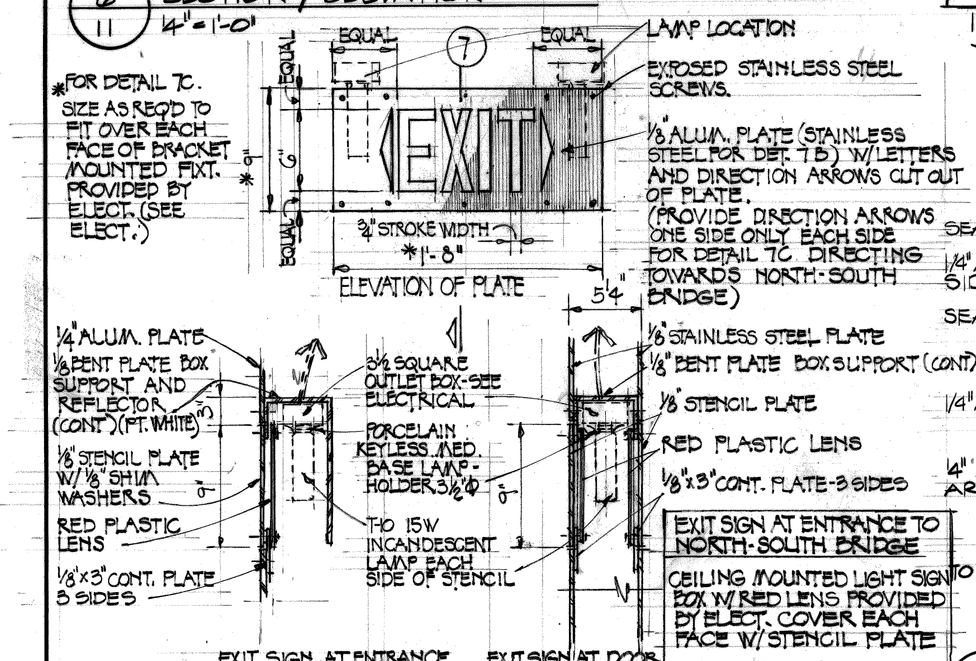

7A/3 EXIT SIGN AT ENTRANCE TO EAST-WEST BRIDGE
7B/8 EXIT SIGN AT DOOR IN EAST-WEST BR.
7C/5
1 1/2" = 1'-0"

5/13 SECTION
3" = 1'-0"

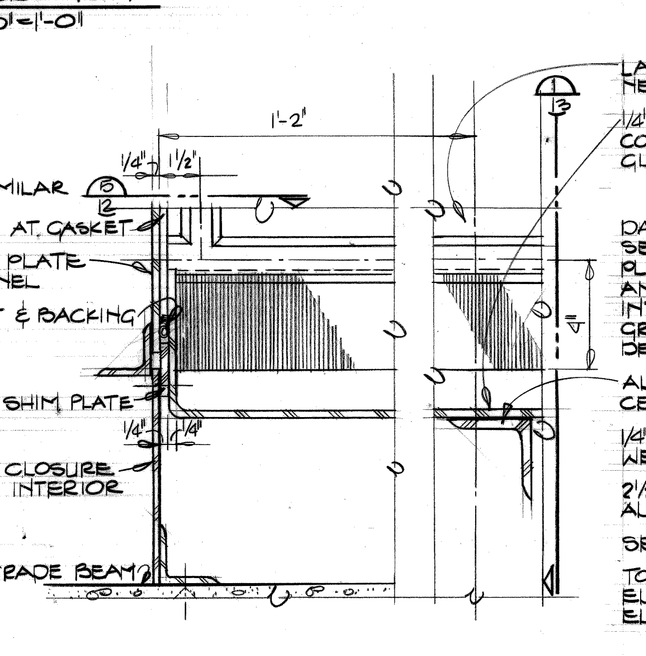

4/13,16 SECTION
3" = 1'-0"

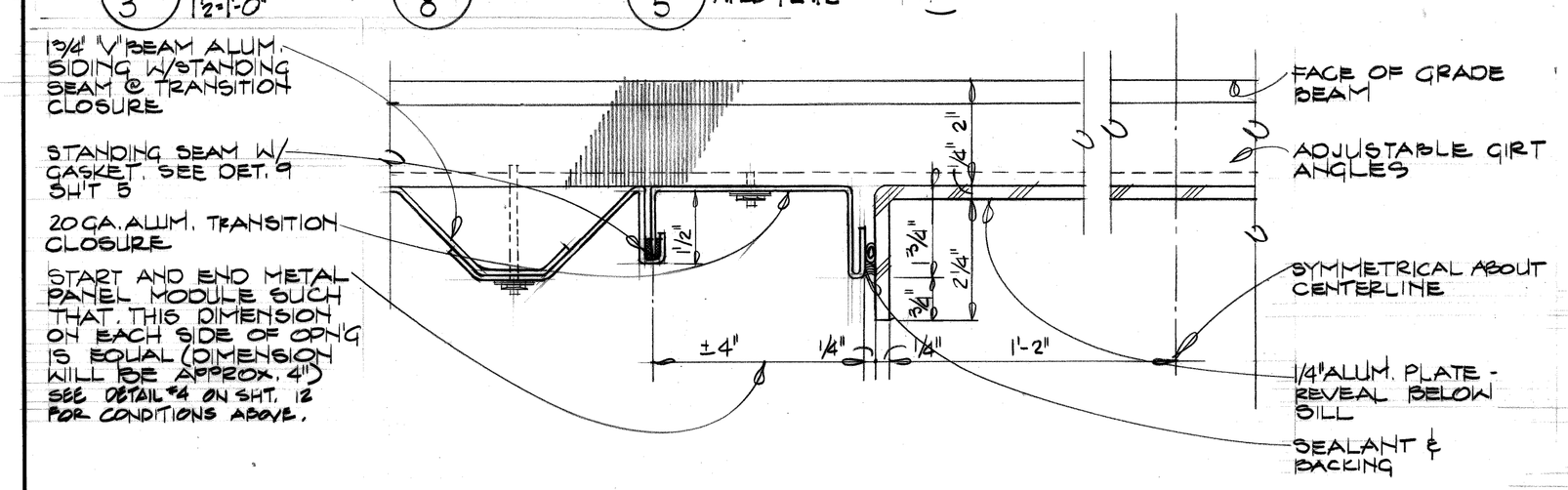

3/16 SECTION
HALF FULL SIZE

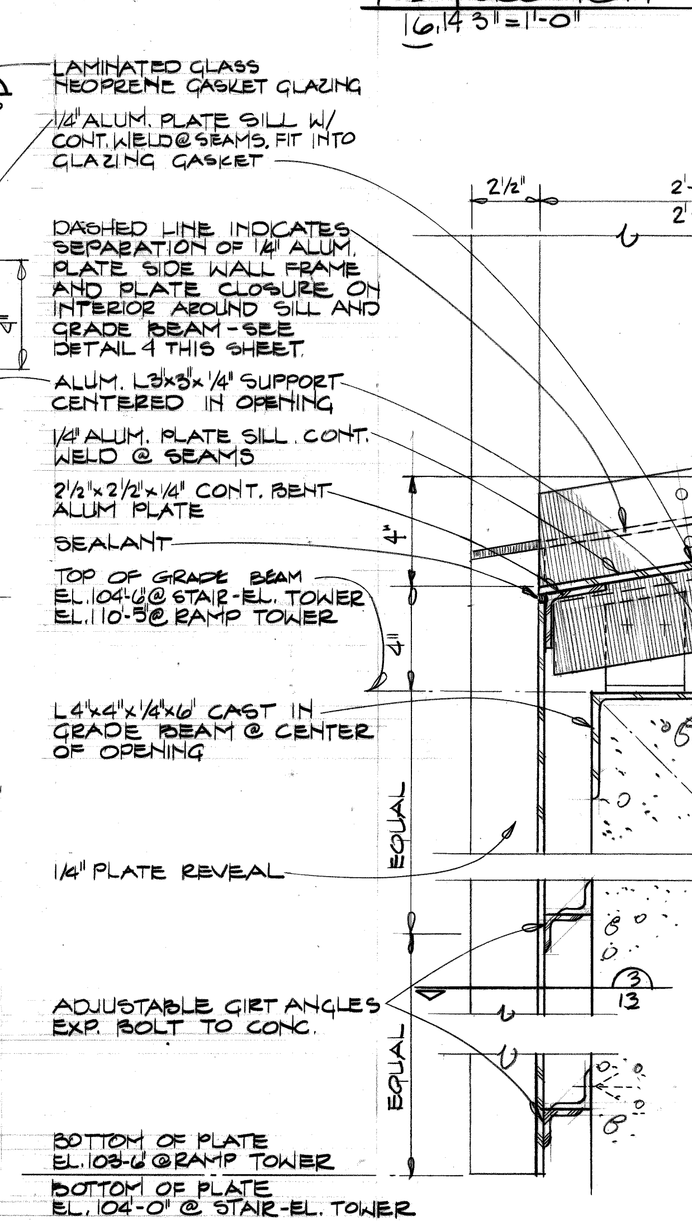

1/1 SECTION
3" = 1'-0"

Joe Louis Sports Arena
Pedestrian Walkway
For City Engineering Division

SH&G
Smith, Hinchman & Grylls Associates, Inc.
Architects Engineers Planners
455 West Fort Street
Detroit, Michigan 48226
(313)964-3000

SH&G Job. No. 11732C

OWNER	
Issued For	5-30-80 Date
1-18-80 Date	D.S. Drawn By
J. Mitch Div. Architect/Engineer	
D Wenderski Correlation Check	
Project Manager	
Construction/Administrative Div. Approval	
Division Approval	

Key Plan

Detail Number / Location or Detail Sheet

N

Drawing Title
DETAILS EAST-WEST BRIDGE

15031A Project No.
A-13 Drawing No.
AS NOTED Scale

9-26-79

MC/PRM# 71858

NOTE:
1. REFERENCE ELEVATION TOP OF CONC. ROOF SLAB @ ROOF SUMP (+0") = EL. 202'-4"

MECHANICAL VENT
SKYLIGHT
TOP OF PARAPET (CONC. CURB) EL. 204'-0"
SKYLIGHT GLAZING - CLEAR LAM. GLASS
ROOF ACCESS HATCH
MECHANICAL VENT
SLOPE
H.P.
R.S.
R.D.

ROOF PLAN @ RAMP TOWER
1/8"=1'-0"

REFLECTED CEILING PLAN SYMMETRICAL ABOUT CENTERLINE
UNDERSIDE OF CONC. ROOF SLAB
4" R.C.
CONC. BEAMS SEE STRUCT.
SKYLIGHT
OPEN TO BELOW
SPIRAL STAIR SEE SHT. 17
1½" ϕ I.D. HANDRAIL POST LOCATION TO MATCH POST LOCATION @ RAMP BELOW
W8×31 VERT. GIRT SUPPORTS MISC. METAL
TOP OF BEAM EL. 172'-5"
CONC. BEAM
PLAN AT LOUVER OPENINGS SYMMETRICAL ABOUT CENTERLINE
CENTER LINE OF PLASTIC LOUVER OPENING EL. 178'-0"

PLAN @ LOUVER OPENING LEVEL & REFLECTED CEILING PLAN @ RAMP TOWER
1/8"=1'-0"

30°
LANDING EL. 122'-3½"
6 EQUAL SPACES TYP. POST SPACING
4 EQUAL SPACES TYP. POST SPACING
RAMP UP
OPEN TO BELOW
EDGE OF CONC.
LANDING EL. 128'-3½"
LANDING EL. 122'-3½"
CONC. GUARDRAIL
CONC. CURB
1½" I.D. HANDRAIL
W8×31 VERT. GIRT SUPPORT @ MID SPAN MISC. METAL
½" ϕ SAG RODS
LANDING EL. 117'-3½"
CONTINUE HANDRAIL STRAIGHT TO MEET AT TANGENT OF HANDRAIL ABOVE

INTERMEDIATE LEVEL PLAN @ RAMP TOWER
1/8"=1'-0"

Joe Louis Sports Arena
Pedestrian Walkway
For City Engineering Division

SH&G
Smith, Hinchman & Grylls Associates, Inc.
Architects Engineers Planners
455 West Fort Street
Detroit, Michigan 48226
(313)964-3000

SH&G Job. No. 11732C

OWNER — 5-30-80
Issued For — Date

1-18-80 — A.I. — M.D.
Date — Drawn By
Div. Architect/Engineer
Correlation Check
Project Manager
Construction Administrative Div. Approval
Division Approval

Key Plan

Detail Number / Location or Detail Sheet

N

Drawing Title
PLANS AND SECTION RAMP TOWER

15031A
Project No.
A-14
Drawing No.
1/8"=1'-0"
Scale

15 of 906

9-26-79

SKYLIGHT
TOP OF PARAPET CONC. CURB EL. 204'-0"
TOP OF ROOF SLAB EL. 205'-0" @ H.P.; 202'-4" @ L.P.
GIRT EL. 199'-4"
ALUM. PLATE SIDES
SEALANT JOINT @ EACH MULLION CENTER LINE
W8×31 VERT. GIRT SUPPORT-MISC. MET.
1½" ϕ I.D. HANDRAIL
SIDING J.T. @ GIRT EL. 189'-8"
GIRT EL. 180'-1"
CENTER LINE OF PLASTIC LOUVER OPEN'G EL. 178'-0"
SIDING J.T. @ GIRT EL. 170'-5"
NOT TO SCALE
CONC. COLUMNS
GIRTS BEYOND
LAMINATED GLASS IN GASKET GLAZING
OPPOSITE HAND
ALUMINUM SIDING
CONC. BEAM
CENTER LINE EAST-WEST BRIDGE EL. 139'-0"
GIRT EL. 160'-5"
GIRT EL. 150'-5"
GIRT EL. 140'-5"
SIDING JOINTS @ GIRT EL. 130'-5"
GIRT EL. 120'-5"
CONC. GUARDRAIL
WALKWAY EL. 164'-8"
LANDING EL. 152'-9½"
LANDING EL. 139'-5½"
LANDING EL. 132'-9½"
LANDING EL. 130'-3½"
LANDING EL. 122'-3½"
LANDING EL. 120'-5½"
LANDING EL. 115'-5½"
LANDING EL. 112'-3½"
CONC. RETAINING WALL
GRADE LEVEL EL. 109'-9"
CENTER LINE OF PLASTIC LOUVER OPENING EL. 114'-3"
TOP OF GRADE BEAM EL. 110'-5"
LANDING EL. 110'-5½"
GRADE LEVEL EL. 109'-9"
91'-4½"
10'-0"
6'-6½"

SECTION THROUGH RAMP TOWER
1/8"=1'-0"

6°20'24" TYP.
CONC. CURB
R.C.
RAMP UP
LANDING EL. 132'-9½"
CONC. COLUMNS BELOW
CONC. BEAM BELOW
1½" ϕ I.D. HANDRAILS
OPPOSITE HAND
OPEN TO BELOW
LANDING EL. 134'-8"
EAST-WEST BRIDGE
LANDING EL. 130'-5½"
STL. POST TO SPIRAL STAIR ABOVE. SEE SHT. 17
CONC. GUARDRAILS
RAMP UP
LANDING EL. 127'-9½"
CONTINUE HANDRAIL STRAIGHT OFF TANGENT OF RADIUS TO HANDRAIL BELOW
ALUMINUM SIDING
24'-0⅝"

WALKWAY LEVEL PLAN @ RAMP TOWER
1/8"=1'-0"

RECESSED LOUVER POCKETS IN CONC. RETAINING WALL SEE DET. 10, SHT. 16.
CONC. WALK - SEE CIVIL DWGS. - ALIGN JOINT LINES WITH WINDOW CENTERLINES (TYPICAL)
ABOVE RAMP
LANDING ABOVE EL. 112'-3½"
RETAINING WALL
COMPACTED FILL
GRADE LEVEL EL. 109'-9"
JOINT LINE
RETAINING WALL
CONC. FLOOR SLAB
1½" ϕ I.D. HANDRAILS
LANDING ABOVE EL. 115'-5½"
CONC. GUARDRAIL
BELOW GRADE AT GRADE
GRADE LEVEL EL. 109'-9"
TOP OF GRADE BEAM EL. 110'-5"
ALUMINUM SIDING
PLASTIC LOUVER OPENING EL. @ ℄ 114'-3"
RETAINING WALL - SEE CIVIL DWGS.
24'-0⅝"

GRADE LEVEL PLAN @ RAMP TOWER
1/8"=1'-0"

MC/PRM# 71858

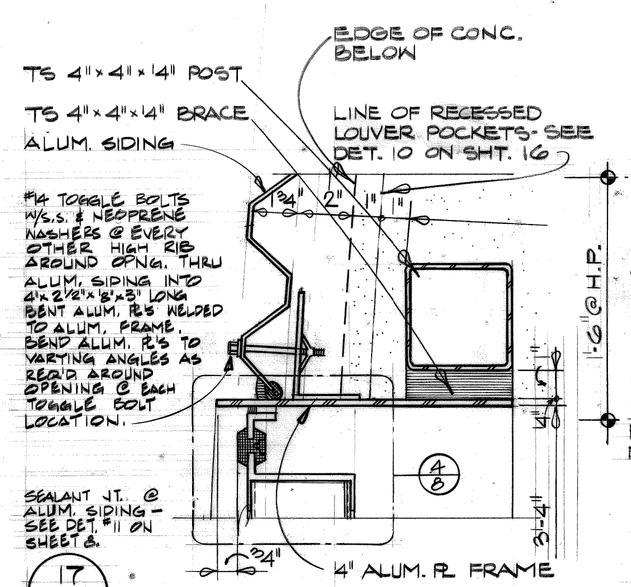

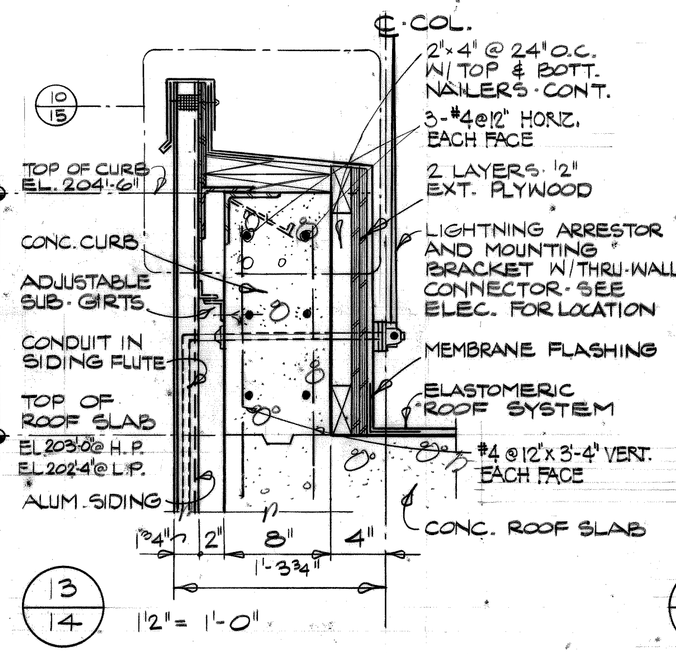

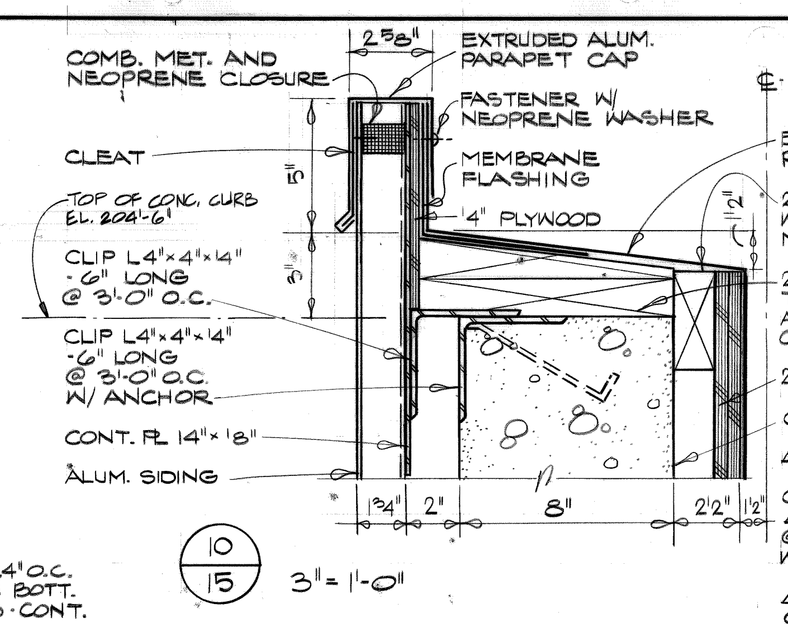

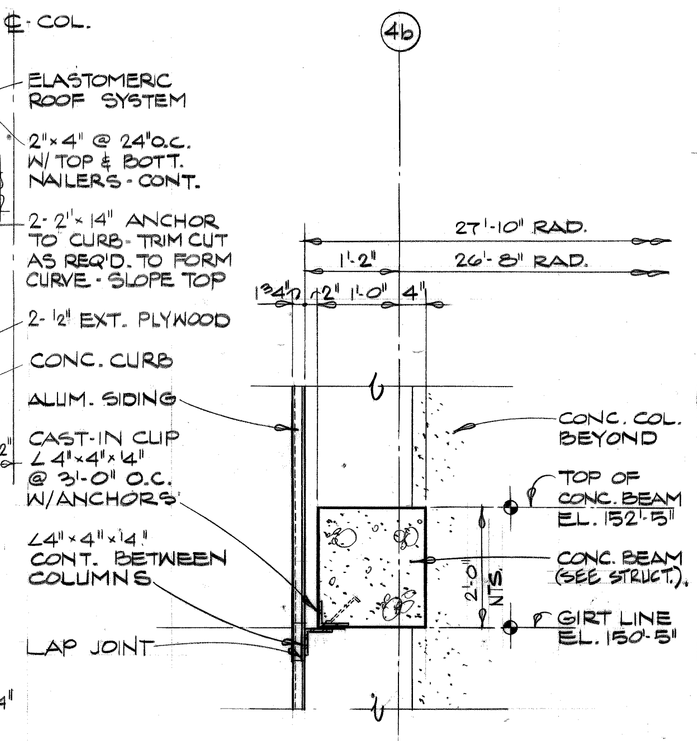

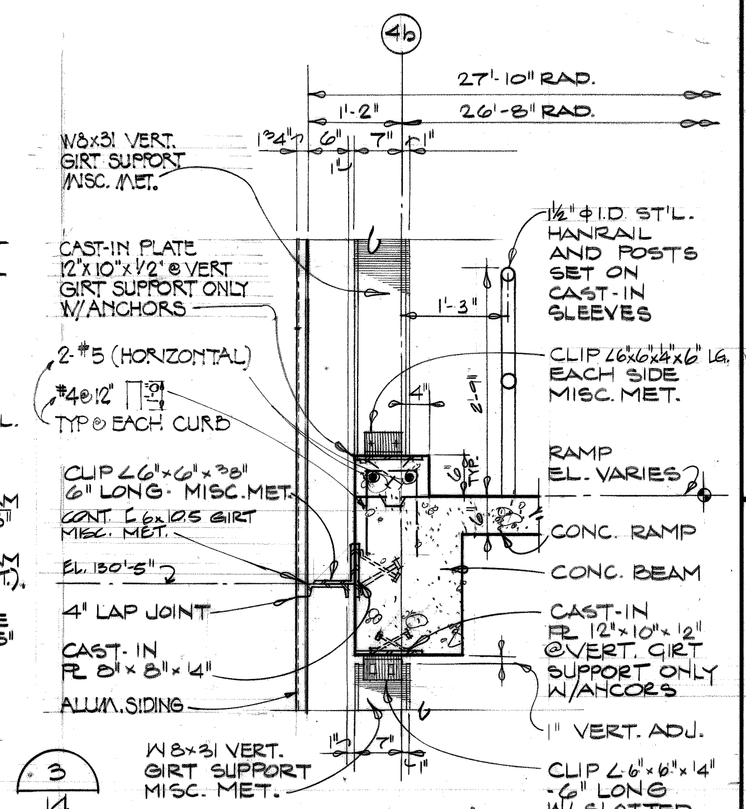

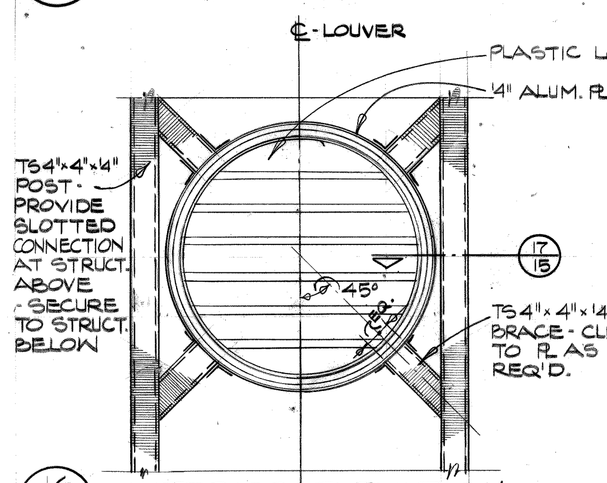

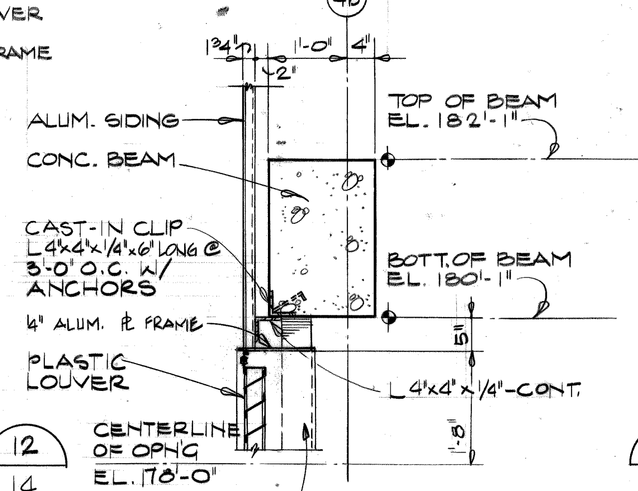

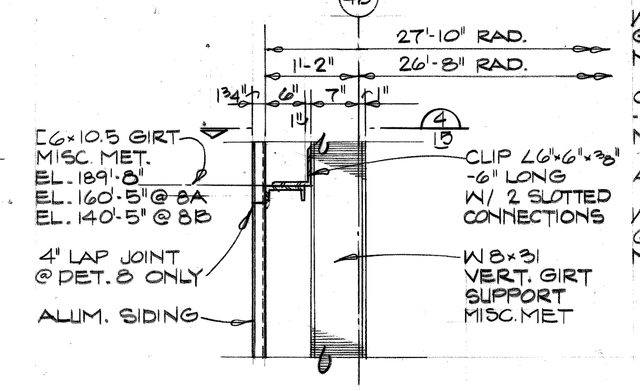

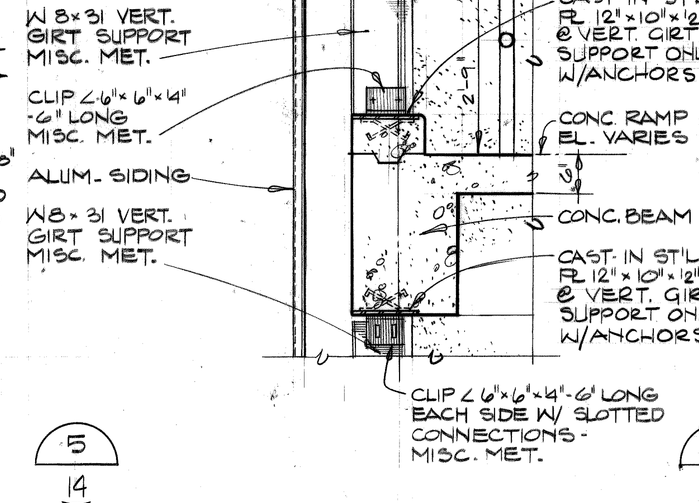

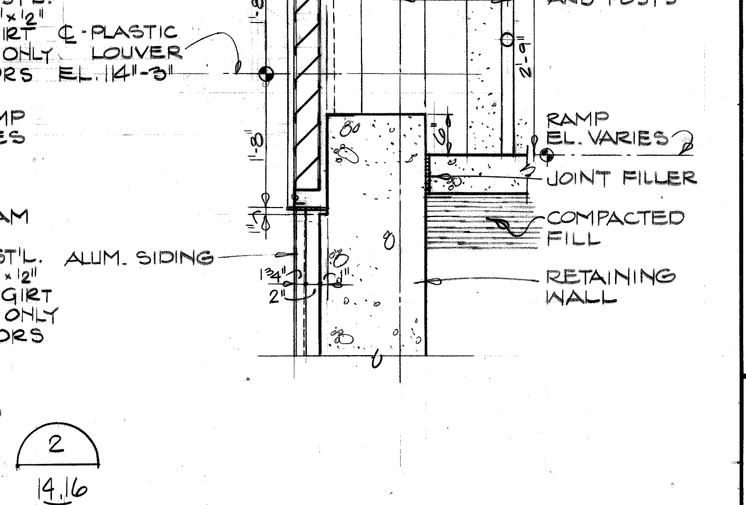

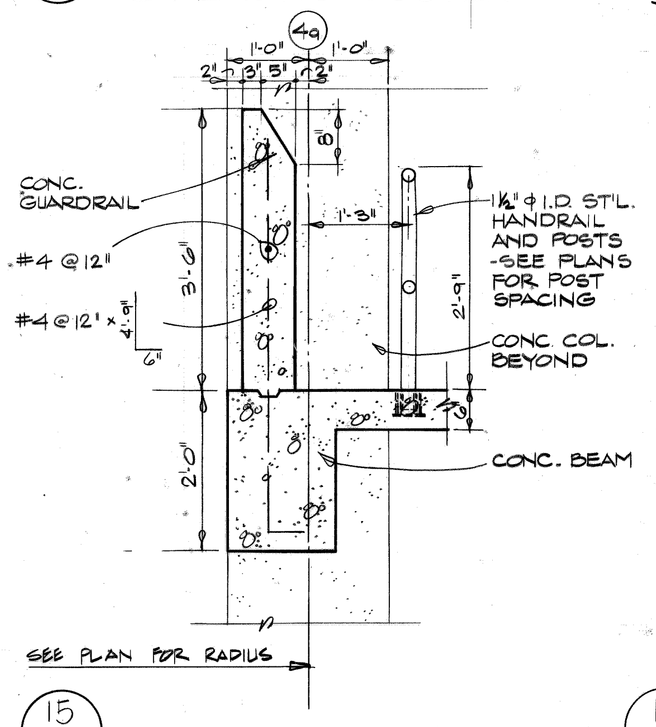

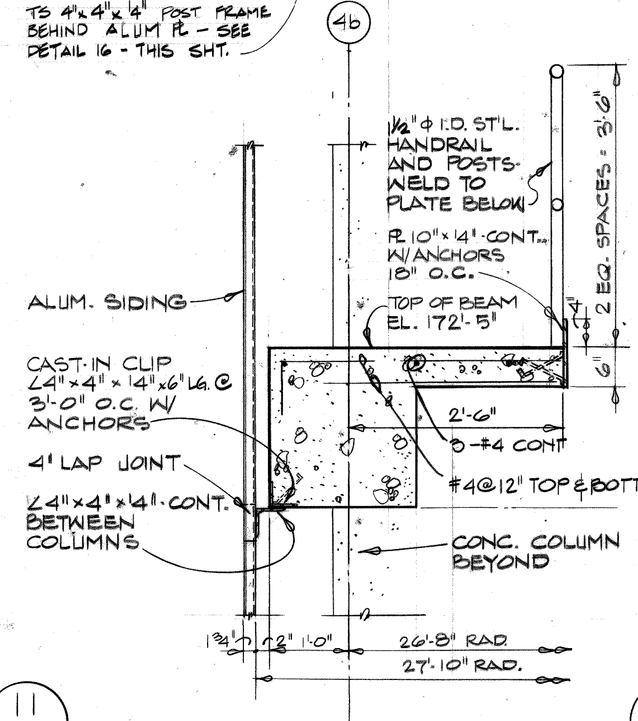

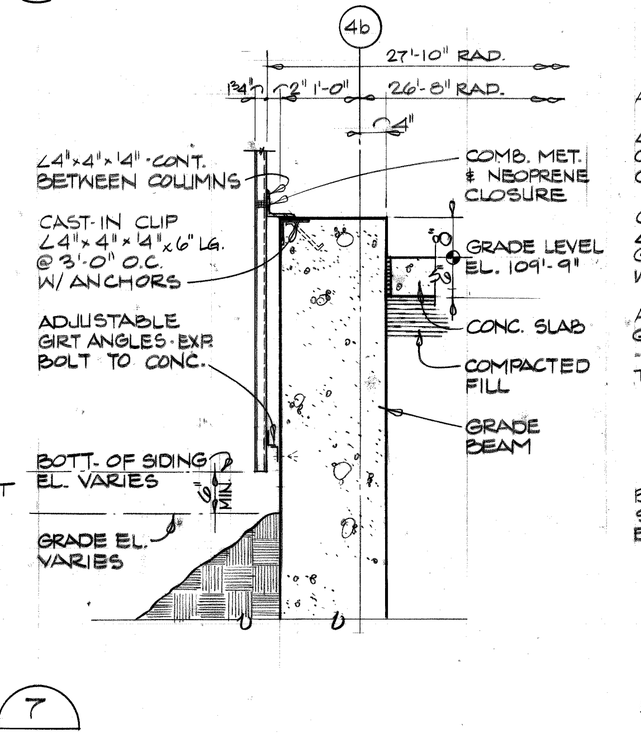

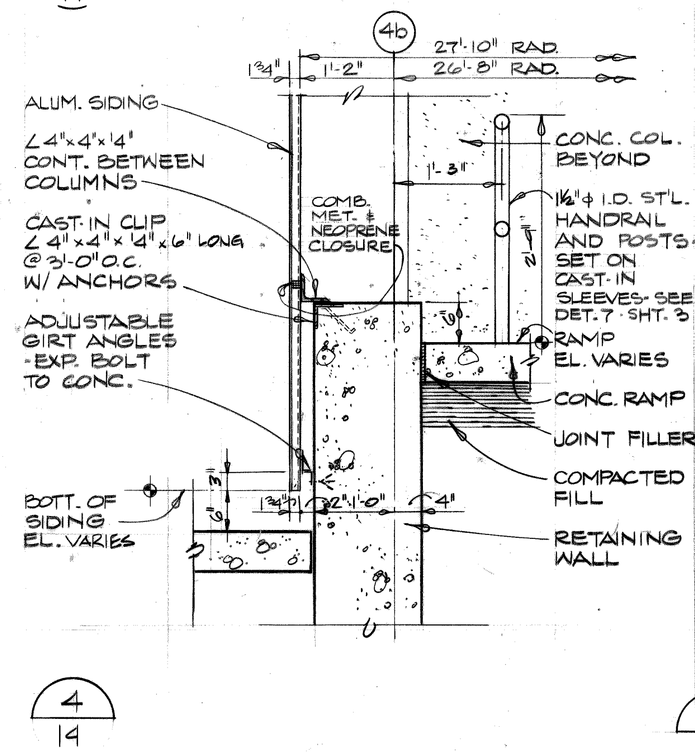

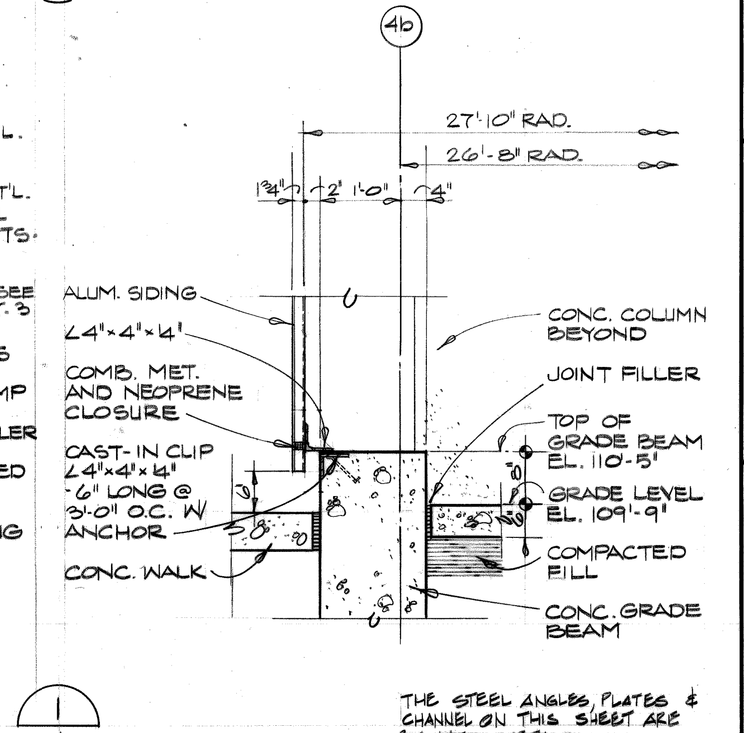

Joe Louis Sports Arena

Pedestrian Walkway

For City Engineering Division

SH&G
Smith, Hinchman & Grylls Associates, Inc.
Architects Engineers Planners
455 West Fort Street
Detroit, Michigan 48226
(313)964-3000

SH&G Job. No. 11732C

OWNER	5-30-80
Issued For	Date

1-18-80	A.I., M.D.
Date	Drawn By
H. Mitch	
Div. Architect/Engineer	
D. Wmderski	
Correlation Check	
Project Manager	
Construction Administrative Div. Approval	
Division Approval	

Key Plan

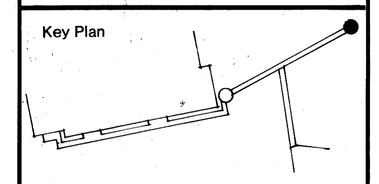

Detail Number / Location or Detail Sheet

N

Drawing Title
DETAILS RAMP TOWER

15031A
Project No.
A-15
Drawing No.
3/4"=1'-0" U.O.N.
Scale

16 OF 56

9-26-79

MC/PRM# 71858

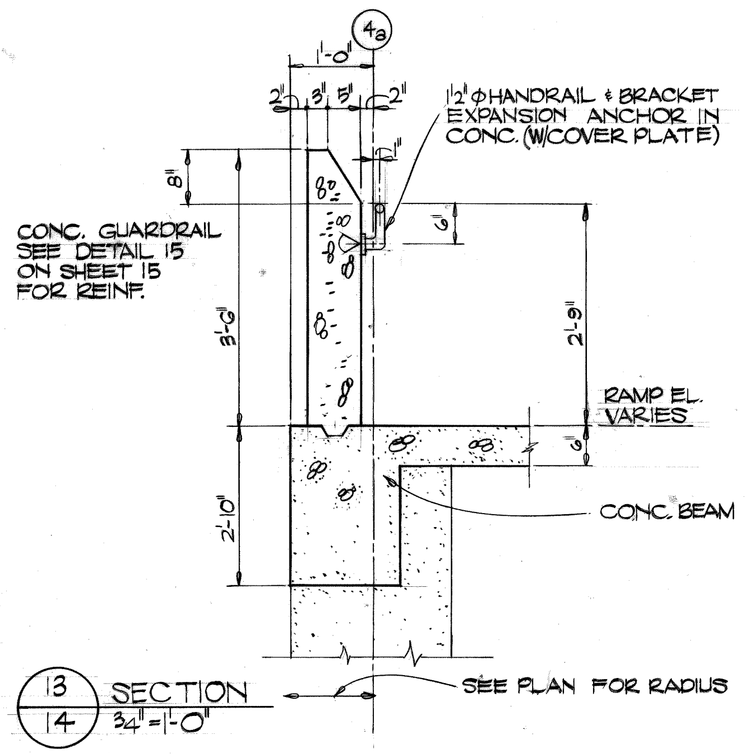

13/14 SECTION
3/4"=1'-0"

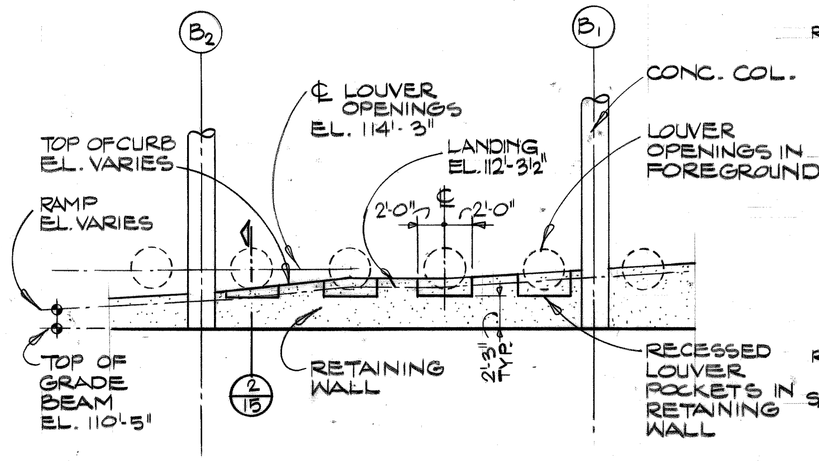

10/14,15 CUT-AWAY SECTION @ RECESSED LOUVER POCKETS
1½"=1'-0"

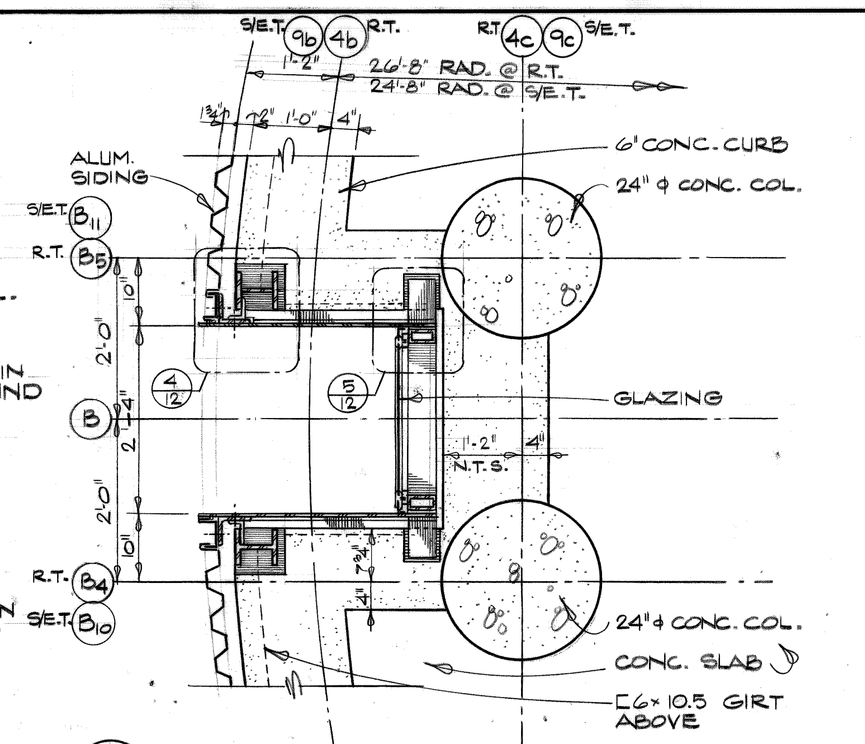

7/14,18 INTERMEDIATE PLAN
¾"=1'-0"

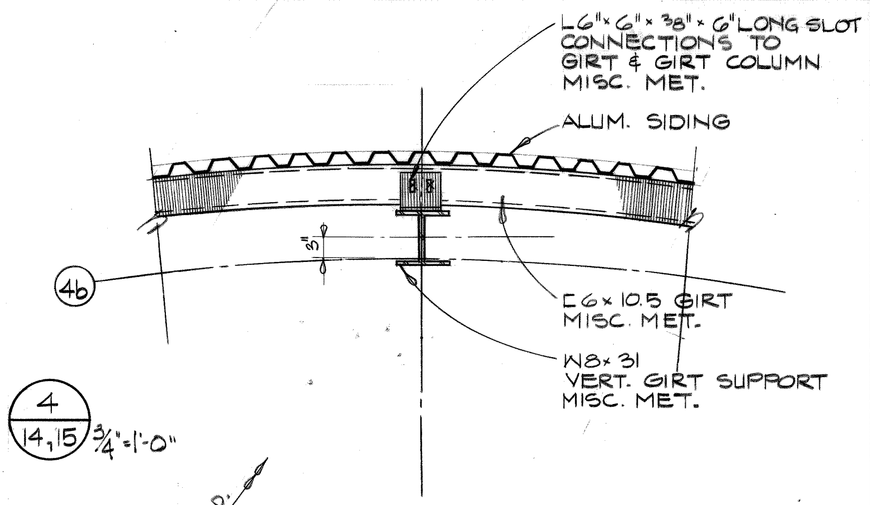

4/14,15 ¾"=1'-0"

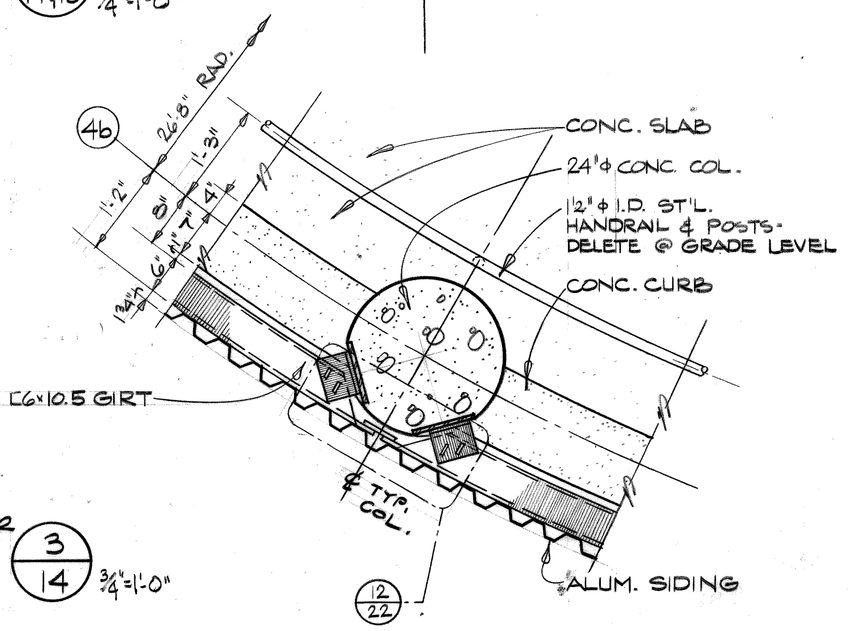

3/14 ¾"=1'-0"

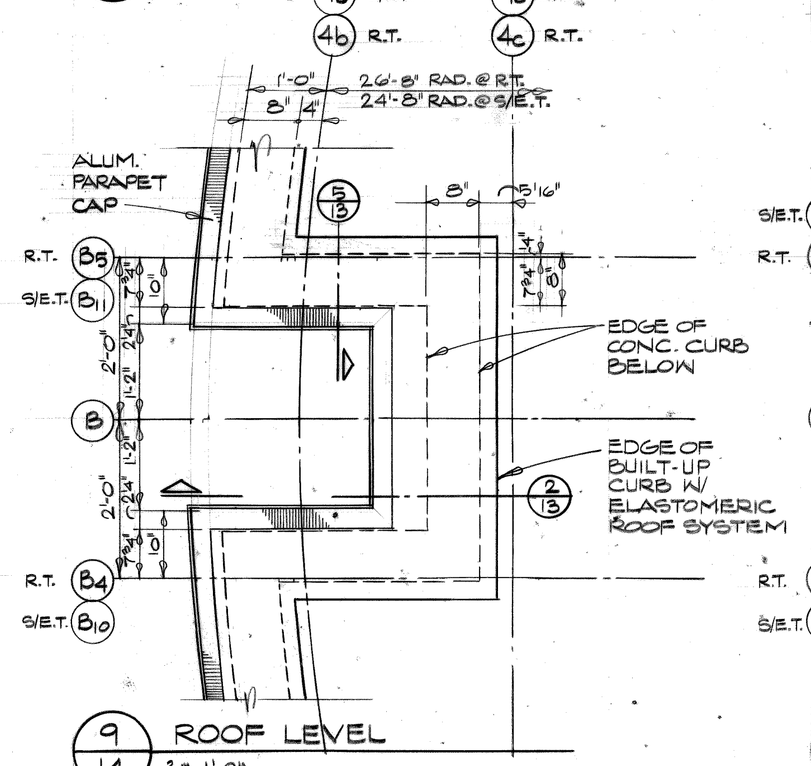

9/14 ROOF LEVEL
¾"=1'-0"

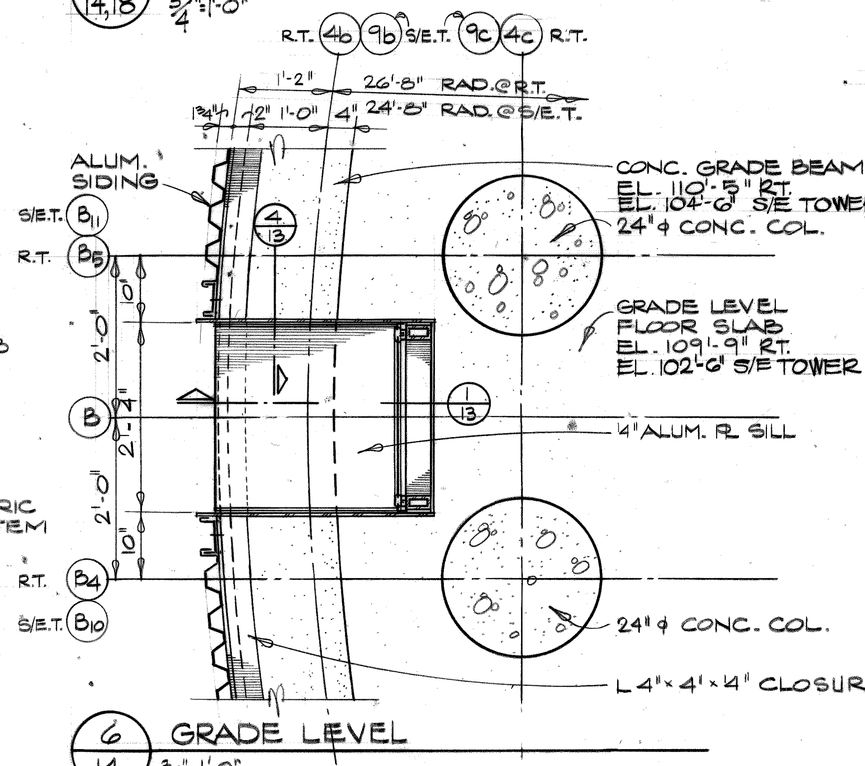

6/14 GRADE LEVEL
¾"=1'-0"

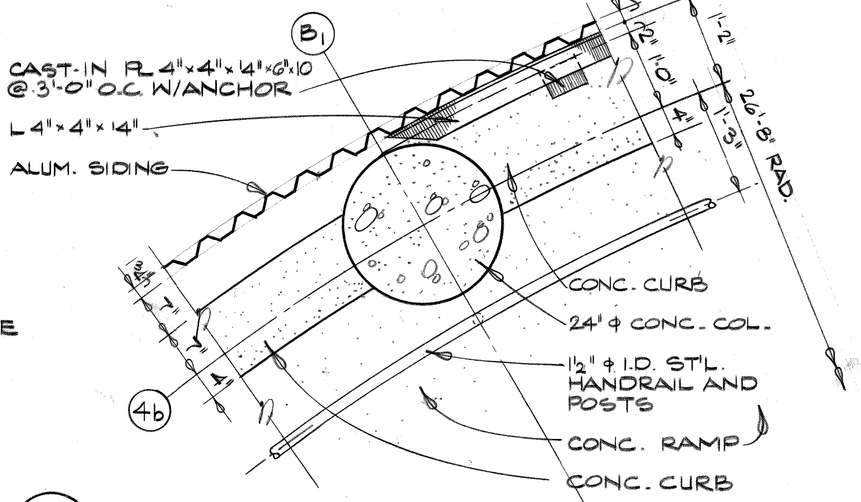

2/14 ¾"=1'-0"

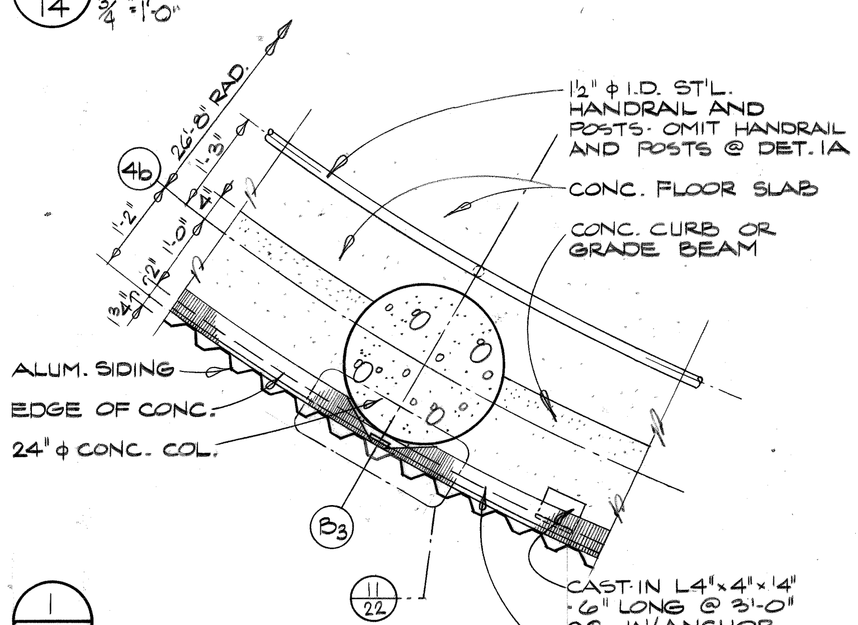

1/14
1A/14 SIM. AS NOTED
¾"=1'-0"

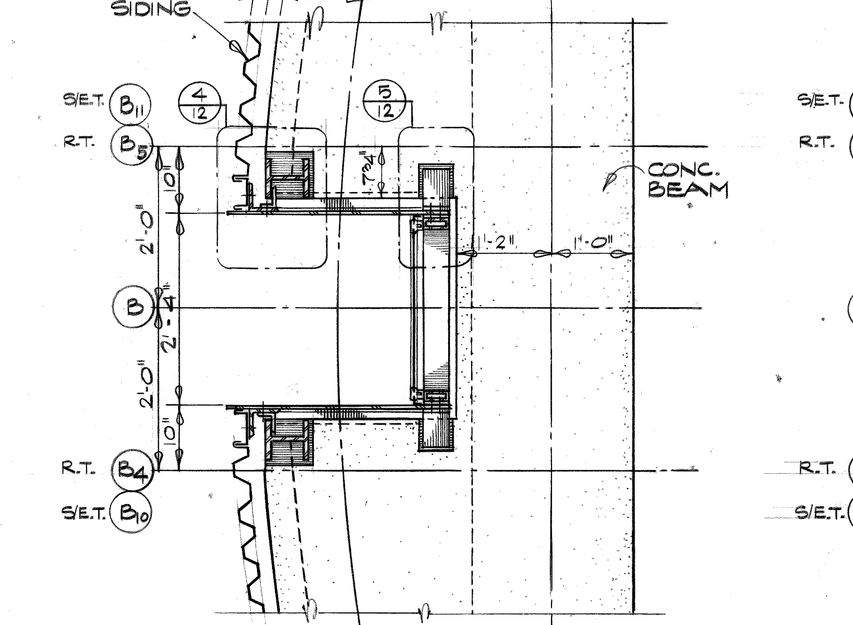

8/14,18 BEAM LEVEL
¾"=1'-0"

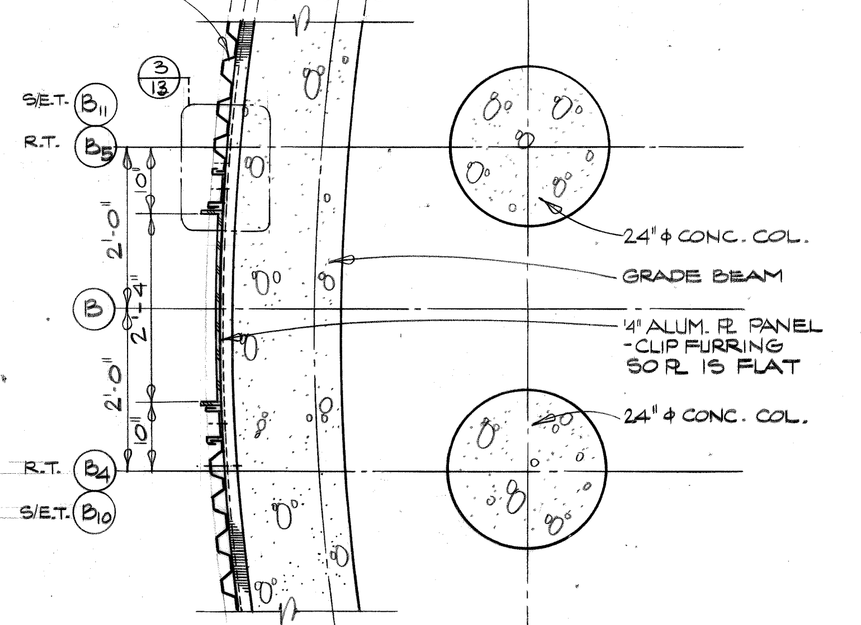

5/14 BELOW GRADE @ RAMP TOWER (R.T.) @ STAIR ELEVATOR TOWER (S.E.T.)
¾"=1'-0"

Joe Louis Sports Arena

Pedestrian Walkway

For City Engineering Division

SH&G
Smith, Hinchman & Grylls Associates, Inc.
Architects Engineers Planners
455 West Fort Street
Detroit, Michigan 48226
(313)964-3000

SH&G Job. No. 11732C

OWNER	5-30-80
Issued For	Date
1-18-80	A.I.M.D.
Date	Drawn By
Div. Architect/Engineer	
Correlation Check	
Project Manager	
Construction Administrative Div. Approval	
Division Approval	

Key Plan

Detail Number / Location or Detail Sheet

N

Drawing Title
DETAILS RAMP TOWER

15031A
Project No.
A-16
Drawing No.
AS NOTED
Scale

17 of 56

9-26-79

MC/PRM# 71858

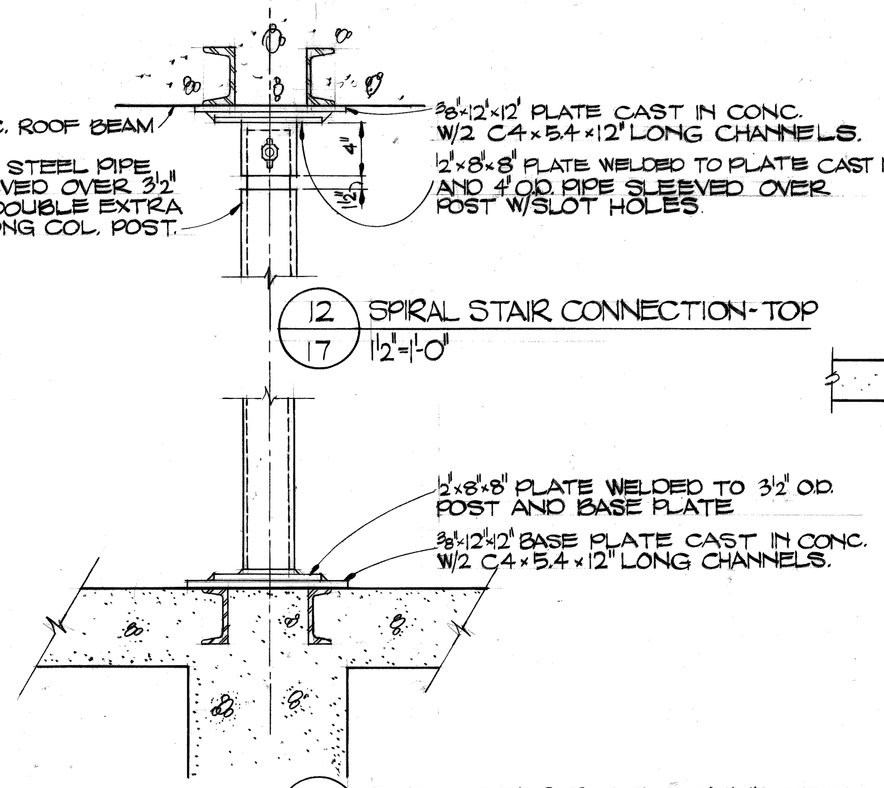

12/17 SPIRAL STAIR CONNECTION-TOP
1½"=1'-0"

11/17 SPIRAL STAIR BASE CONNECTION
1½"=1'-0"

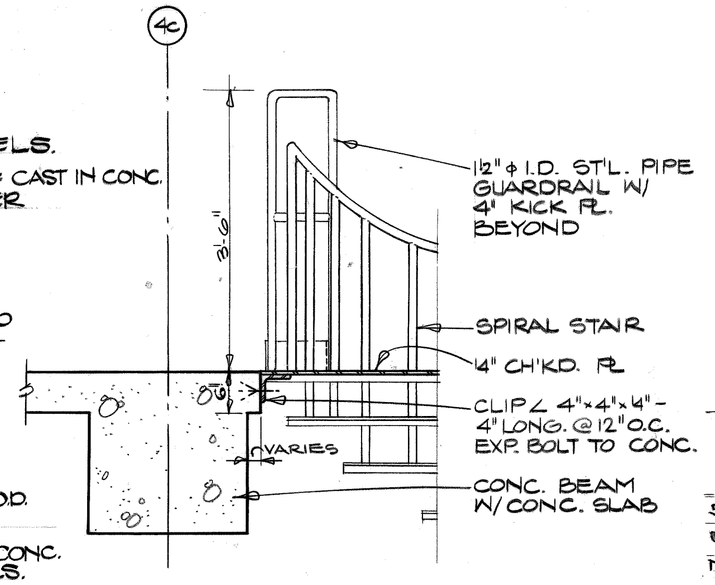

9/17 SECTION- LANDING
¾"=1'-0"

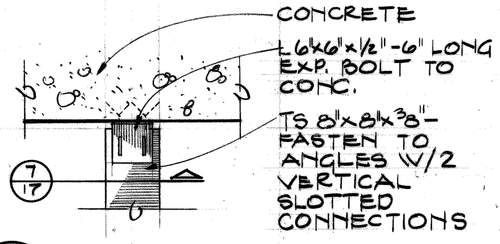

8/17 SECTION - TOP PLATE
¾"=1'-0"

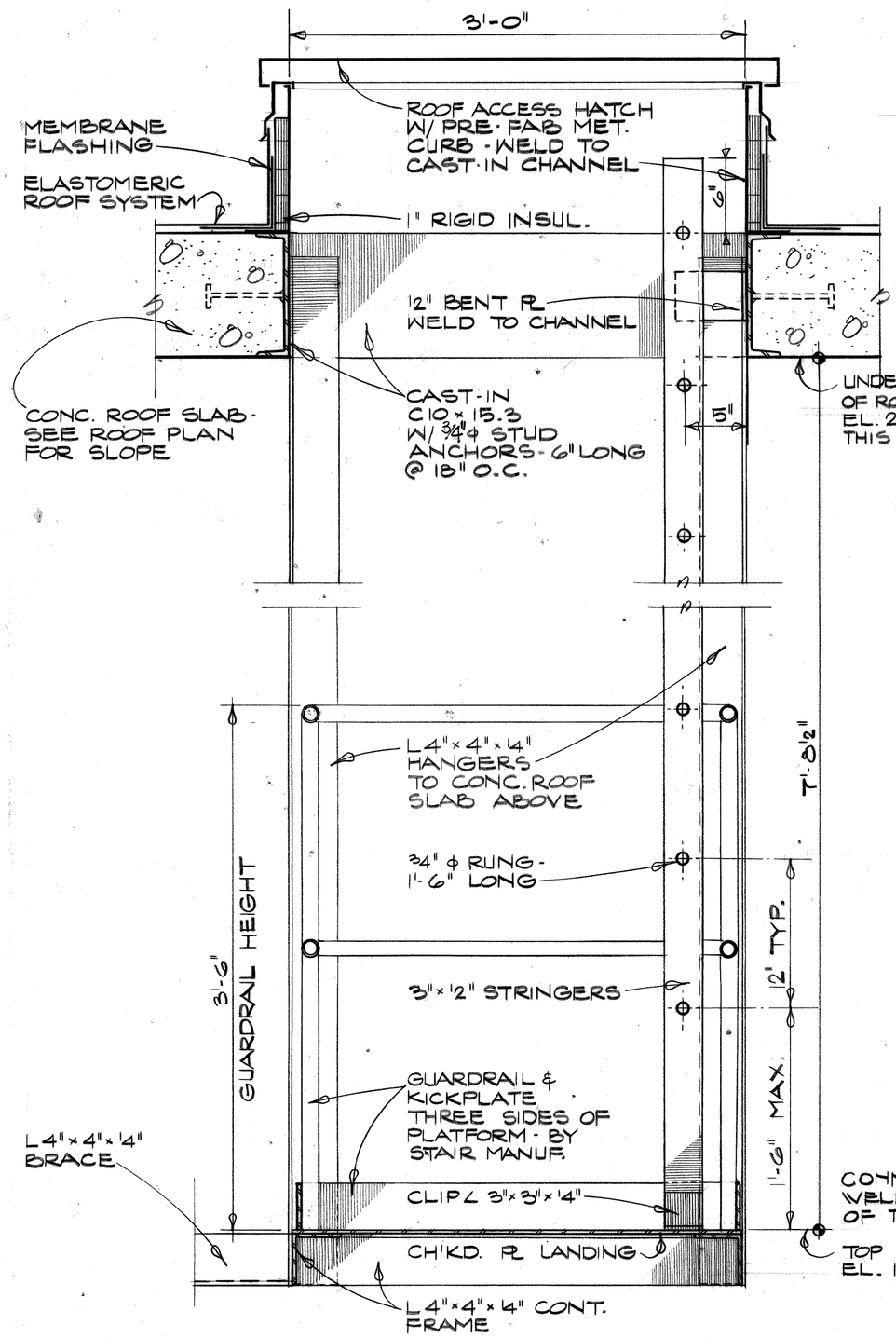

10/14,17 SECTION @ LADDER AND HATCH
1½"=1'-0"

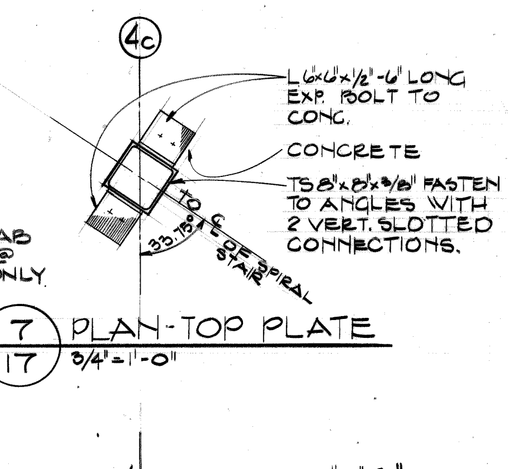

7/17 PLAN-TOP PLATE
¾"=1'-0"

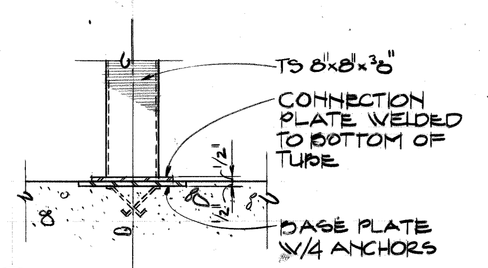

6/17 SECTION - BASE PLAN
¾"=1'-0"

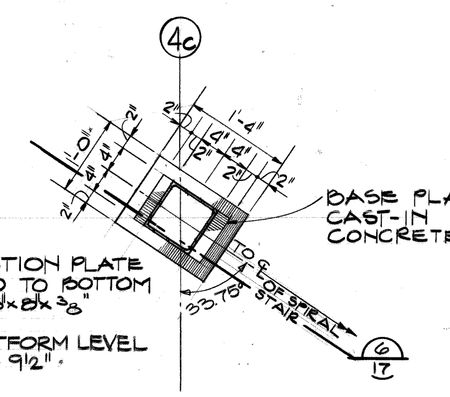

5/17 PLAN-BASE PLATE
¾"=1'-0"

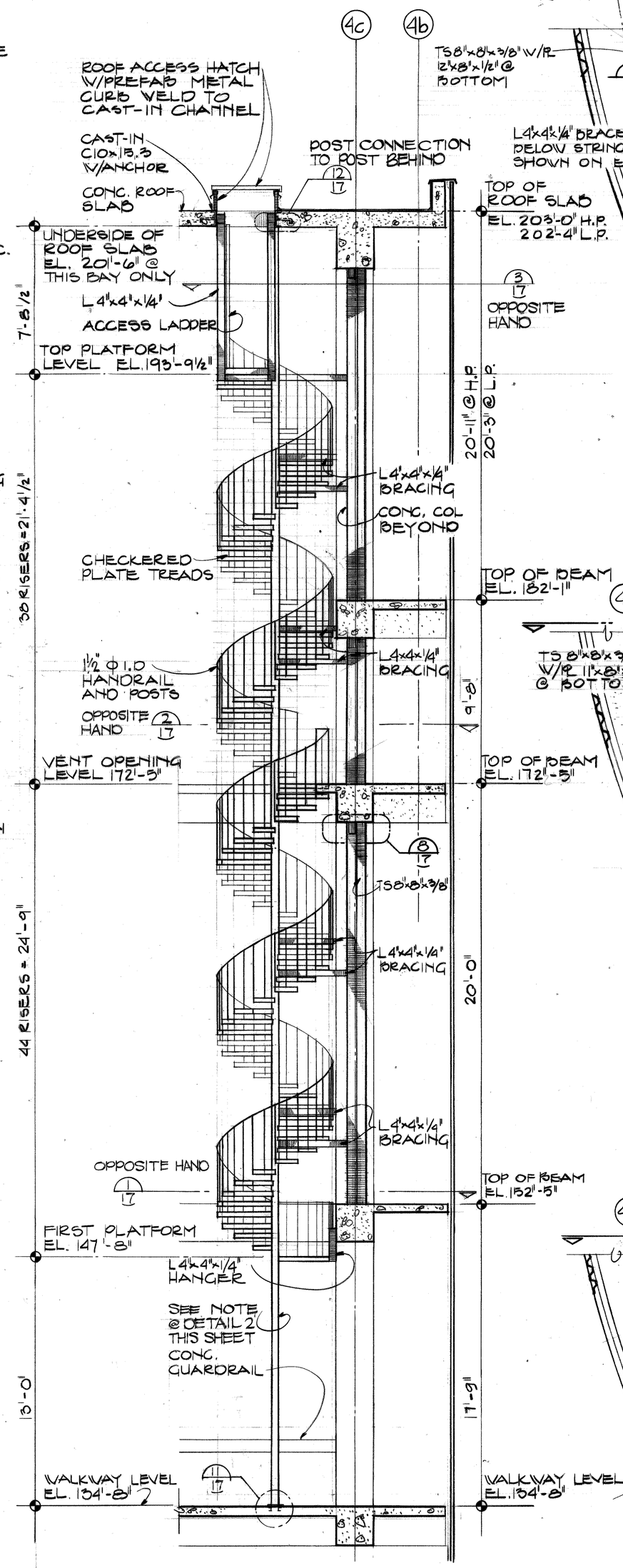

4/17 ELEVATION - SPIRAL STAIR
¼"=1'-0"

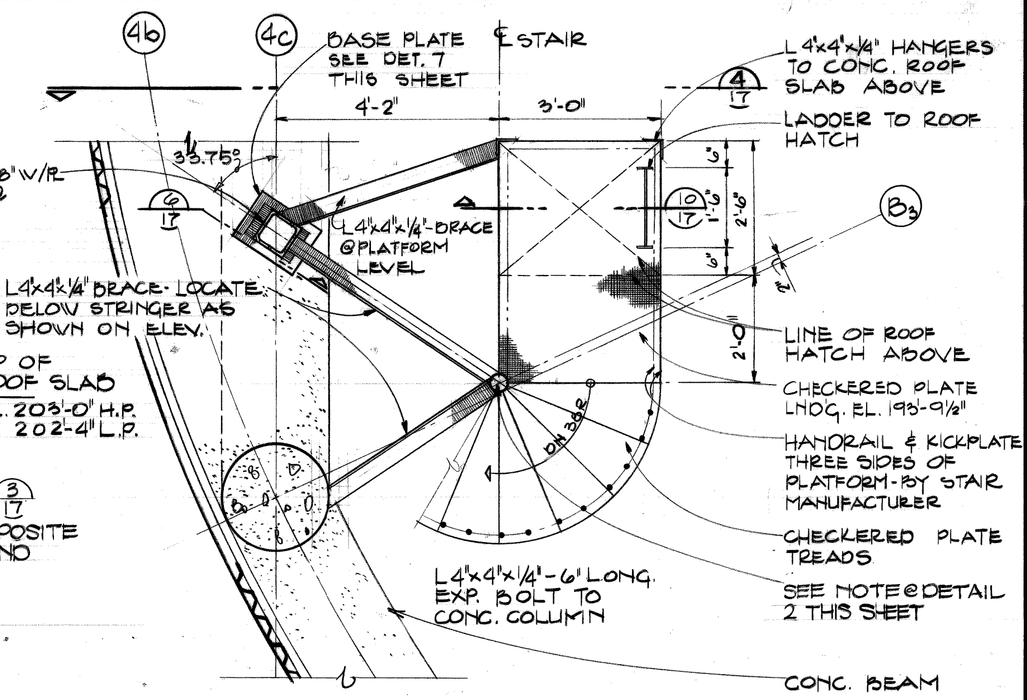

3/14,17 SPIRAL STAIR PLAN @ TOP PLATFORM LEVEL
1/2"=1'-0"

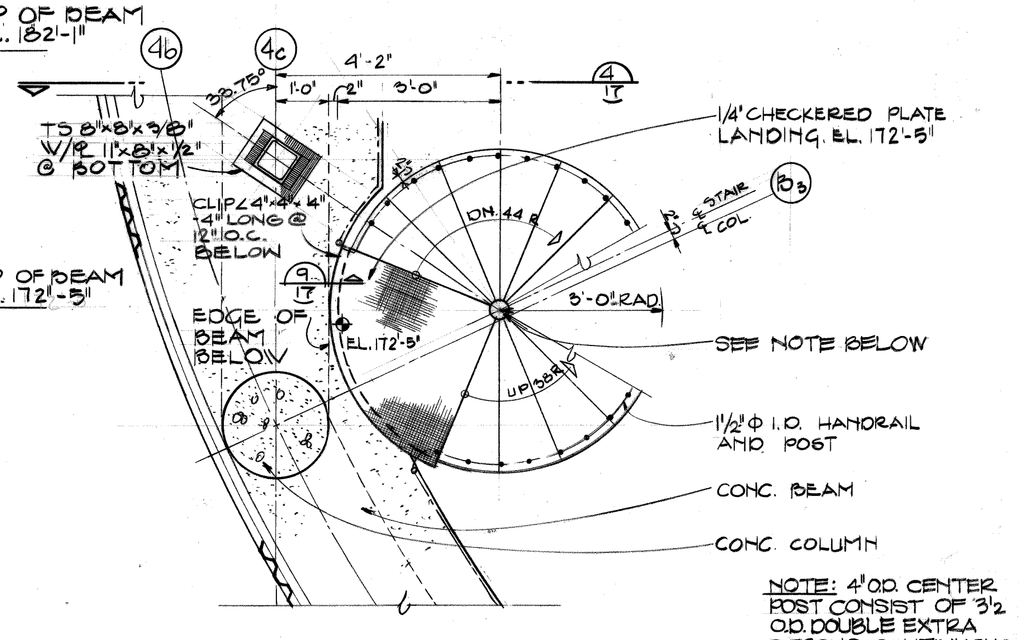

NOTE: 4" O.D. CENTER POST CONSIST OF 3½ O.D. DOUBLE EXTRA STRONG CONTINUOUS CENTER POST W/SPIRAL STAIR TREAD SLEEVED OVER POST & 4" O.D. PIPE SLEEVE ABOVE AND BELOW TREADS.

2/14,17 SPIRAL STAIR PLAN @ VENT OPENING LEVEL
1/2"=1'-0"

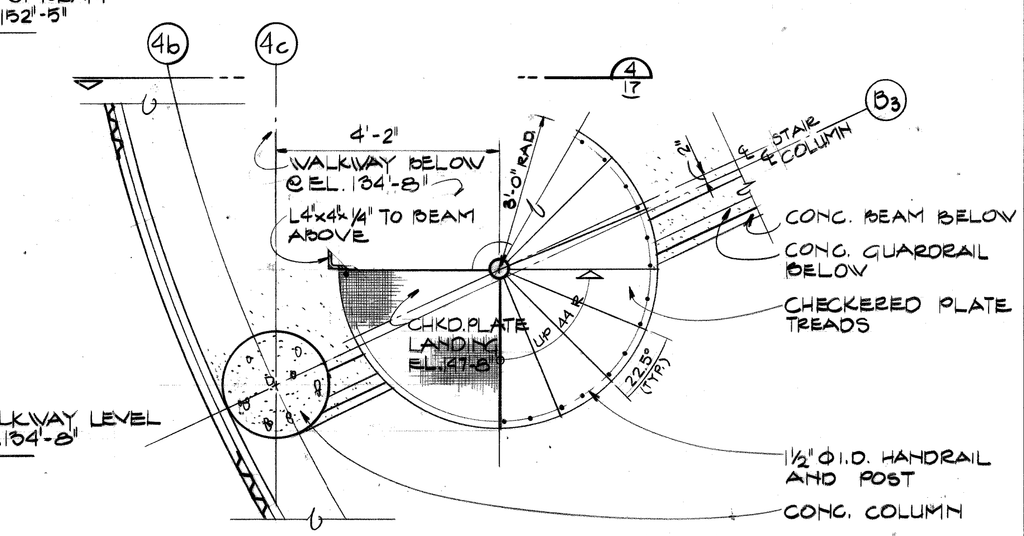

1/14,17 SPIRAL STAIR PLAN @ FIRST PLATFORM LEVEL
1/2"=1'-0"

Joe Louis Sports Arena

Pedestrian Walkway

For City Engineering Division

SH&G
Smith, Hinchman & Grylls Associates, Inc.
Architects Engineers Planners
455 West Fort Street
Detroit, Michigan 48226
(313)964-3000
SH&G Job. No. 11732C

OWNER	5-30-80
Issued For	Date

1-18-80	A.I. D.S.
Date	Drawn By
Div. Architect/Engineer	
Correlation Check	
Project Manager	
Construction Administrative Div. Approval	
Division Approval	

Key Plan

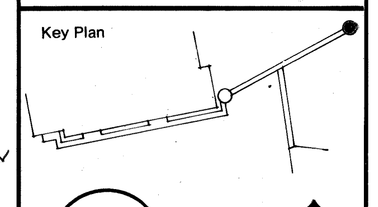

Detail Number / Location or Detail Sheet

N

Drawing Title
DETAILS SPIRAL STAIR

15031A
Project No.
A-17
Drawing No.
AS NOTED
Scale

18 OF 076

9-26-79

MC/PRM# 71858

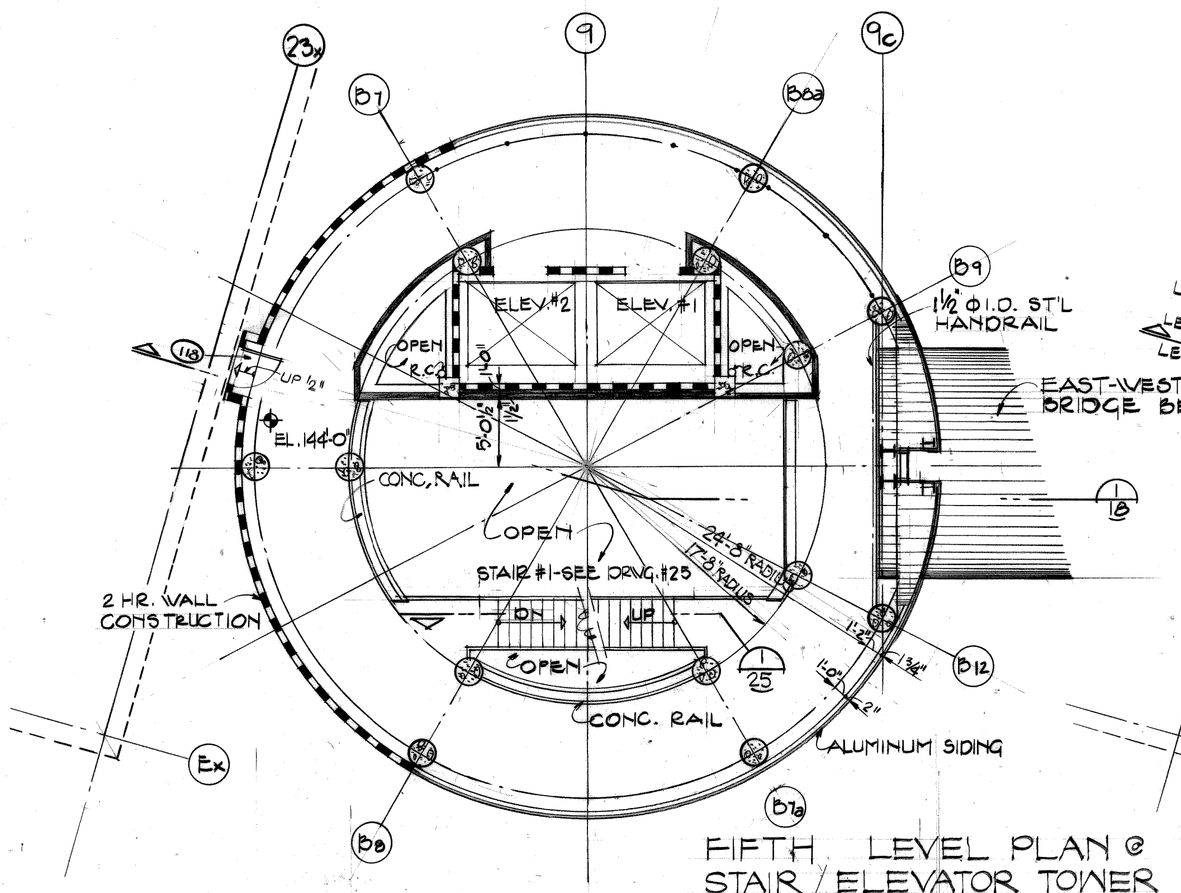

FIFTH LEVEL PLAN @ STAIR / ELEVATOR TOWER

1/8" = 1'-0"

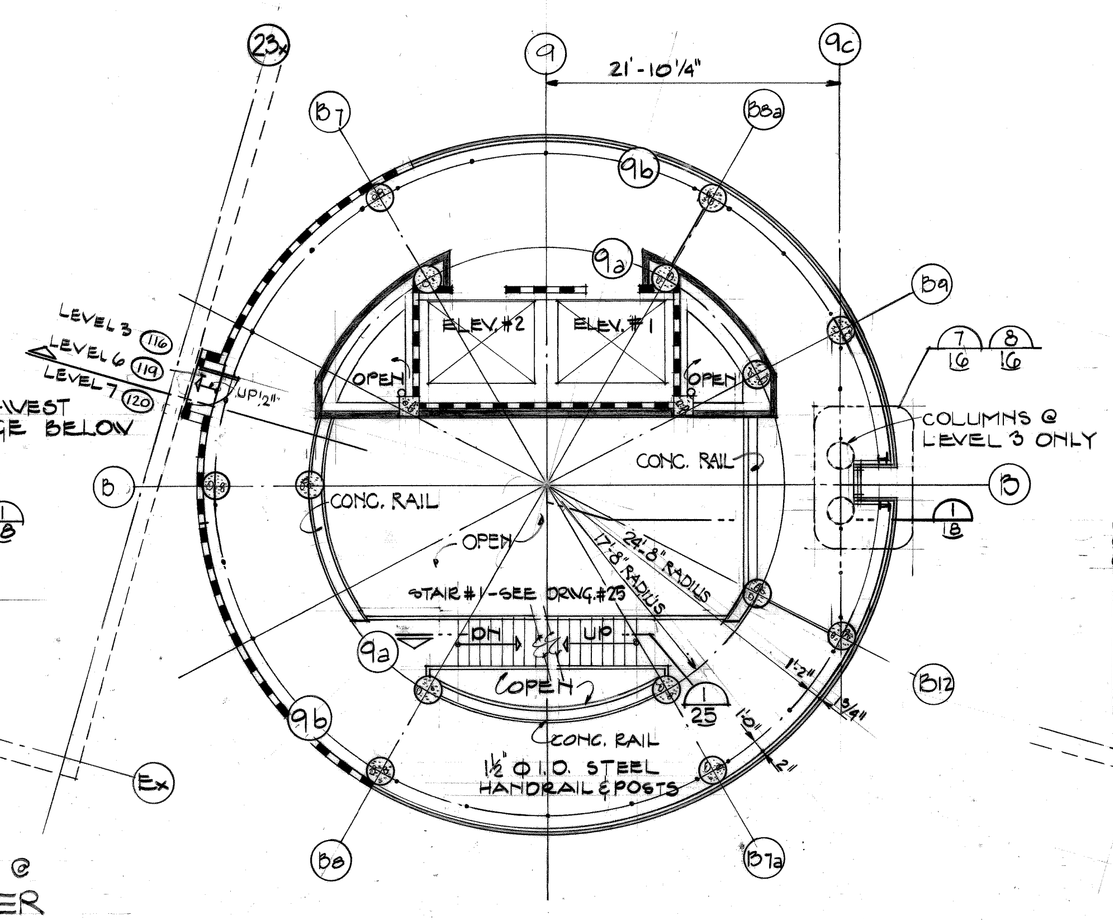

3, 6, 7 & 8 LEVEL PLAN @ STAIR / ELEVATOR TOWER

1/8" = 1'-0"

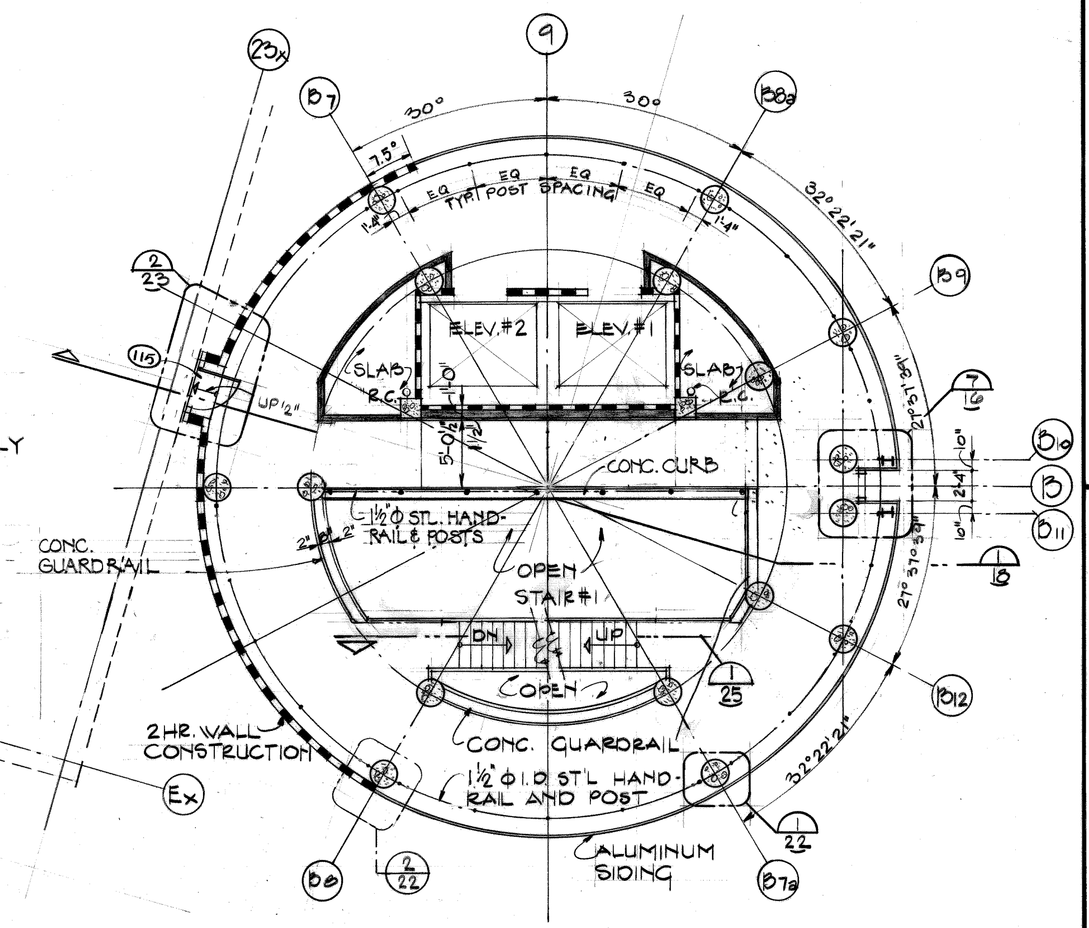

SECOND LEVEL PLAN @ STAIR / ELEVATOR TOWER

1/8" = 1'-0"

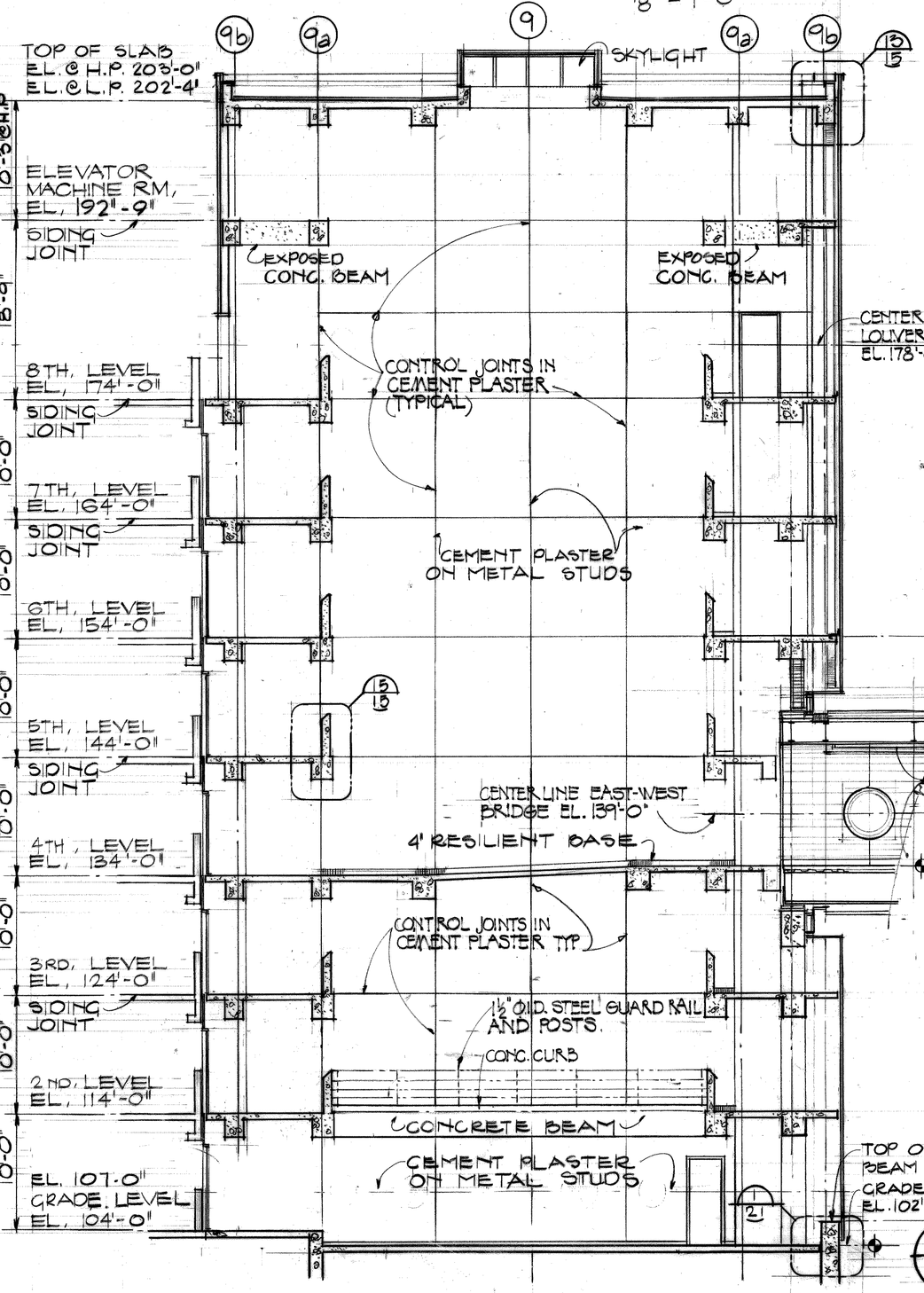

SECTION THRU, STAIR / ELEVATOR TOWER

1/8" = 1'-0"

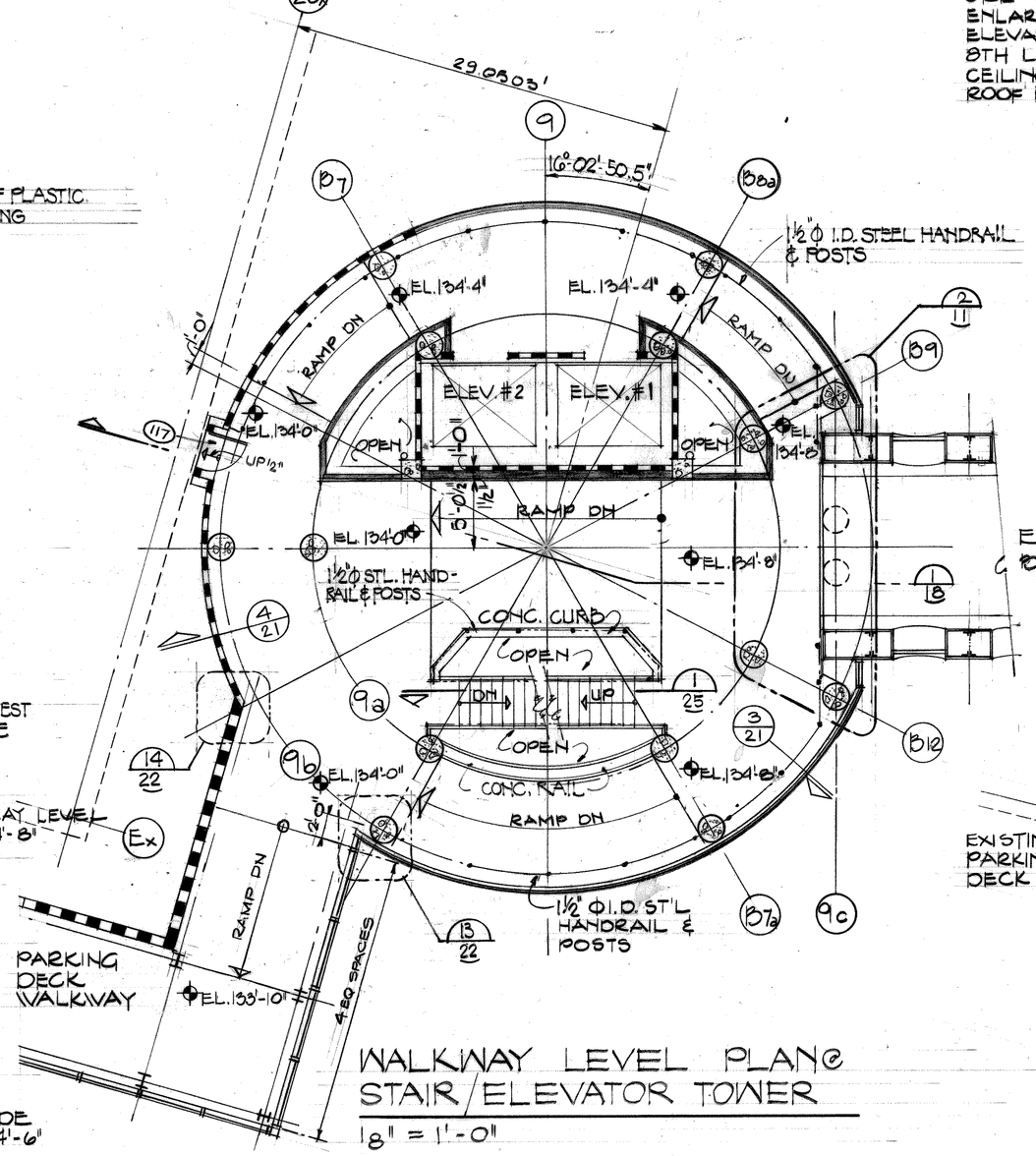

WALKWAY LEVEL PLAN @ STAIR / ELEVATOR TOWER

1/8" = 1'-0"

NOTE:
SEE SHT. 19 FOR ENLARGED PLANS OF ELEVATOR CORE 9TH LEVEL REFLECTED CEILING PLAN AND ROOF PLAN.

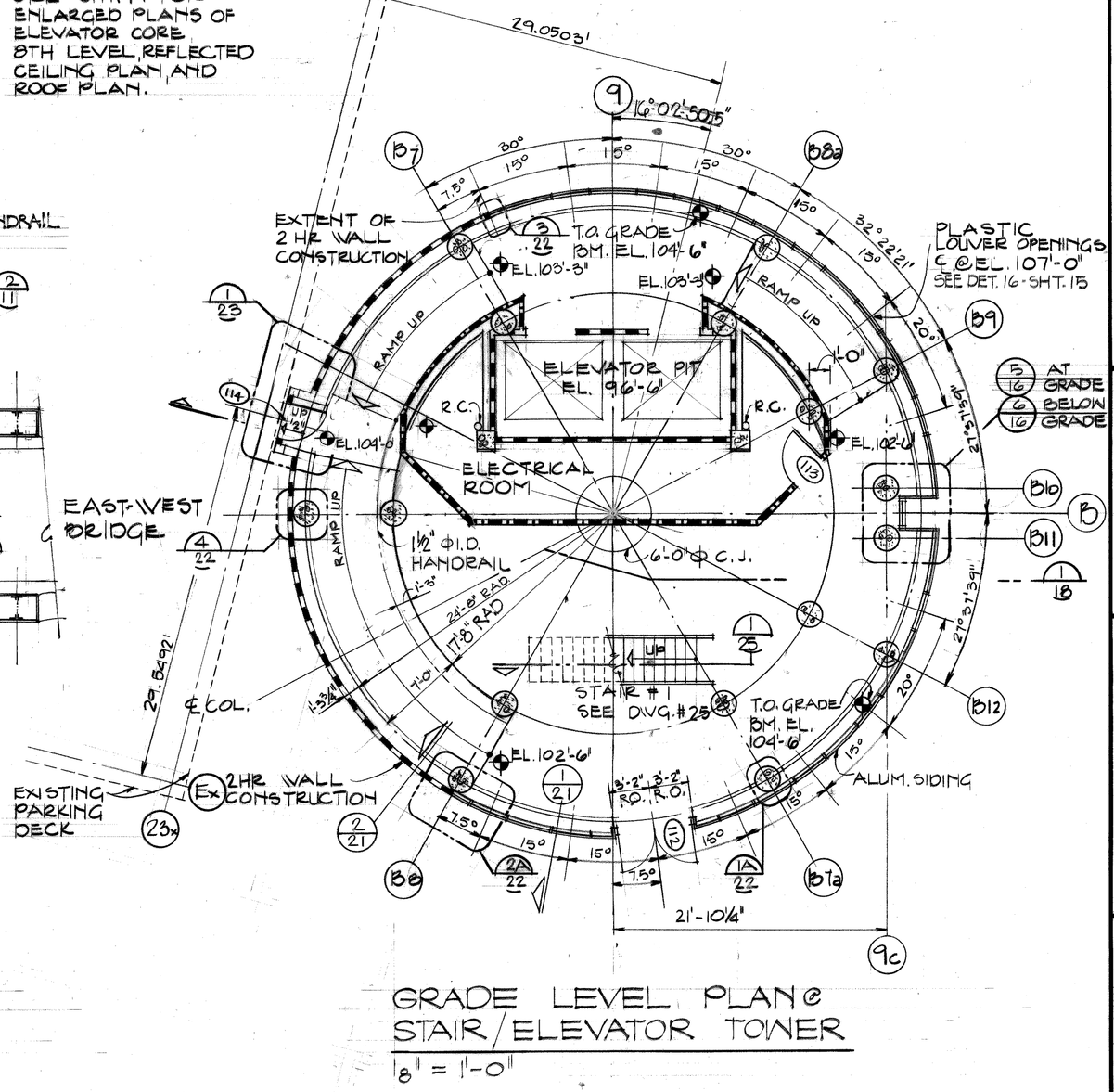

GRADE LEVEL PLAN @ STAIR / ELEVATOR TOWER

1/8" = 1'-0"

Joe Louis Sports Arena

Pedestrian Walkway

For City Engineering Division

SH&G
Smith, Hinchman & Grylls Associates, Inc.
Architects Engineers Planners
455 West Fort Street
Detroit, Michigan 48226
(313)964-3000

SH&G Job. No. 11732C

OWNER Issued For — 5-30-80 Date

1-18-80 Date — A.I. Drawn By

Div. Architect/Engineer

Correlation Check

Project Manager

Construction Administrative Div. Approval

Division Approval

Key Plan

Detail Number / Location or Detail Sheet

N

Drawing Title
PLANS AND SECTIONS STAIR-ELEVATOR TOWER

15031A Project No.

A-18 Drawing No.

AS NOTED Scale

9-26-79

MC/PRM# 71858

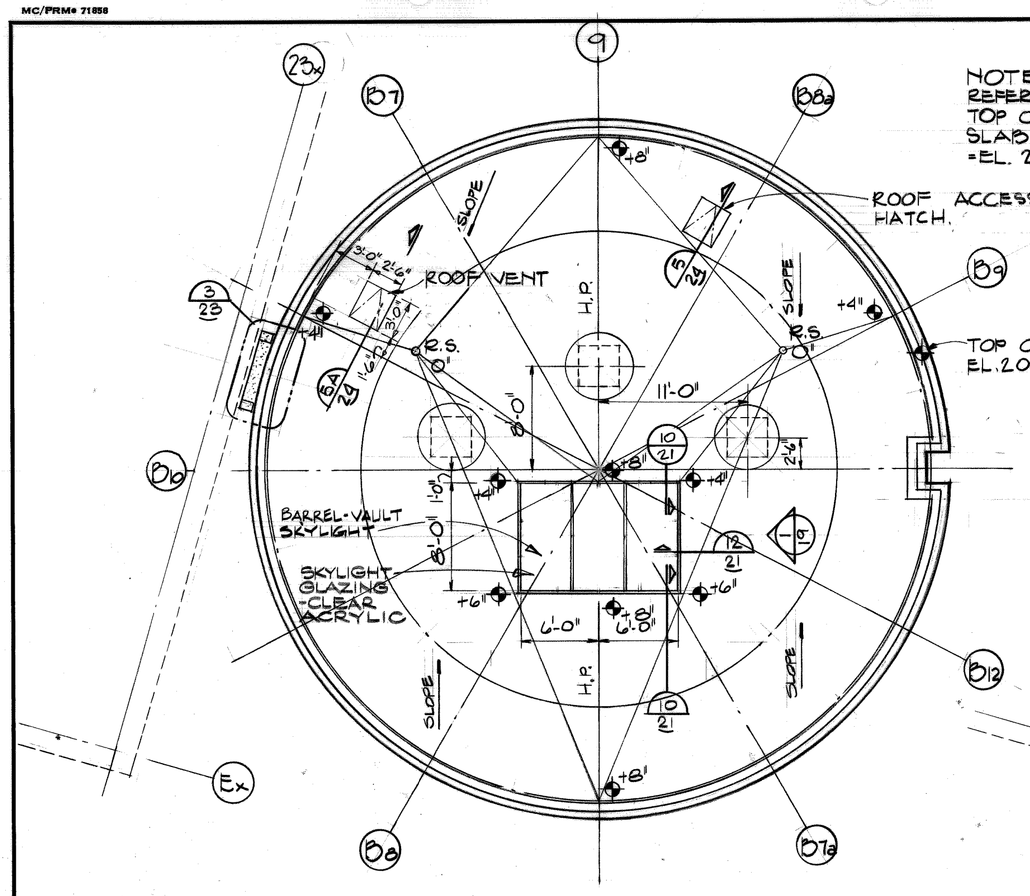

ROOF PLAN
1/8" = 1'-0"

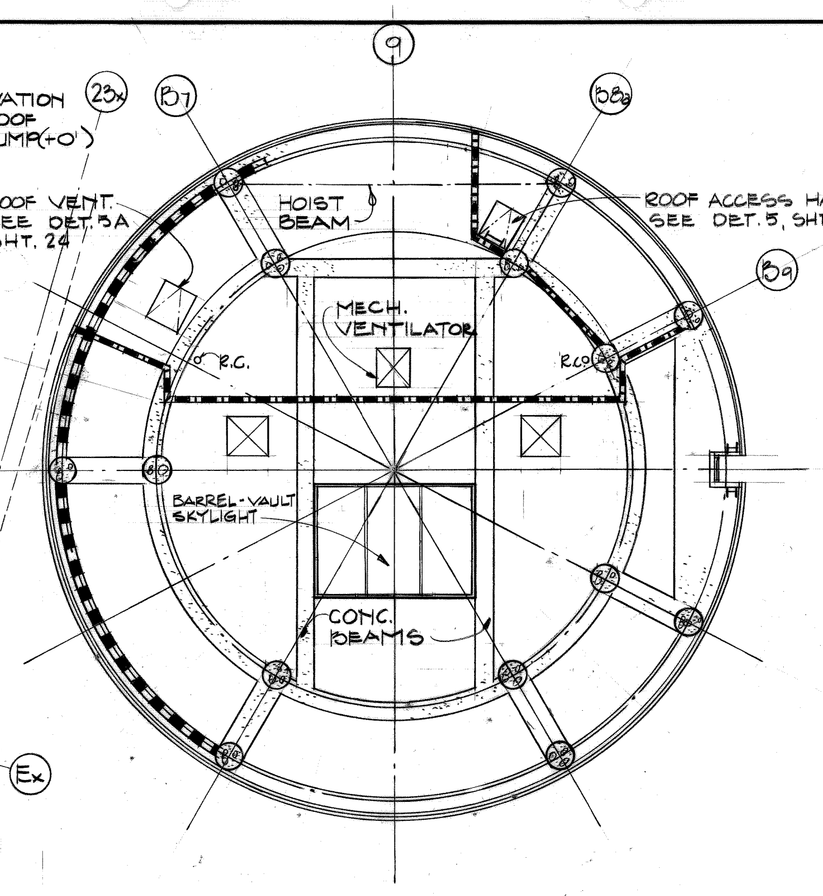

REFLECTED CEILING PLAN
1/8" = 1'-0"

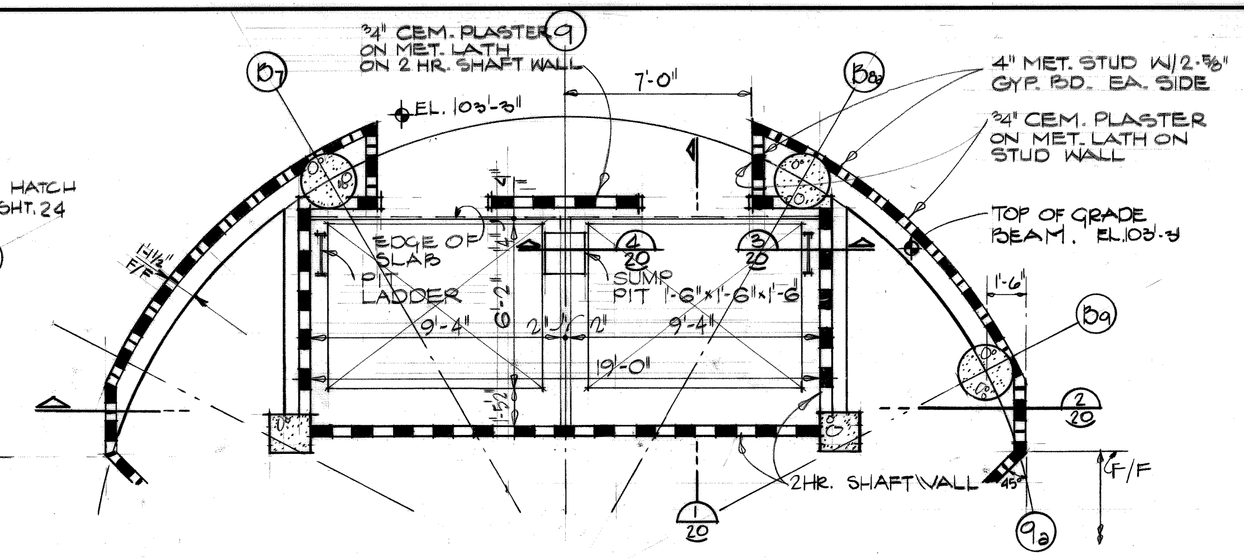

GRADE LEVEL PLAN @ ELEVATOR
1/4" = 1'-0"

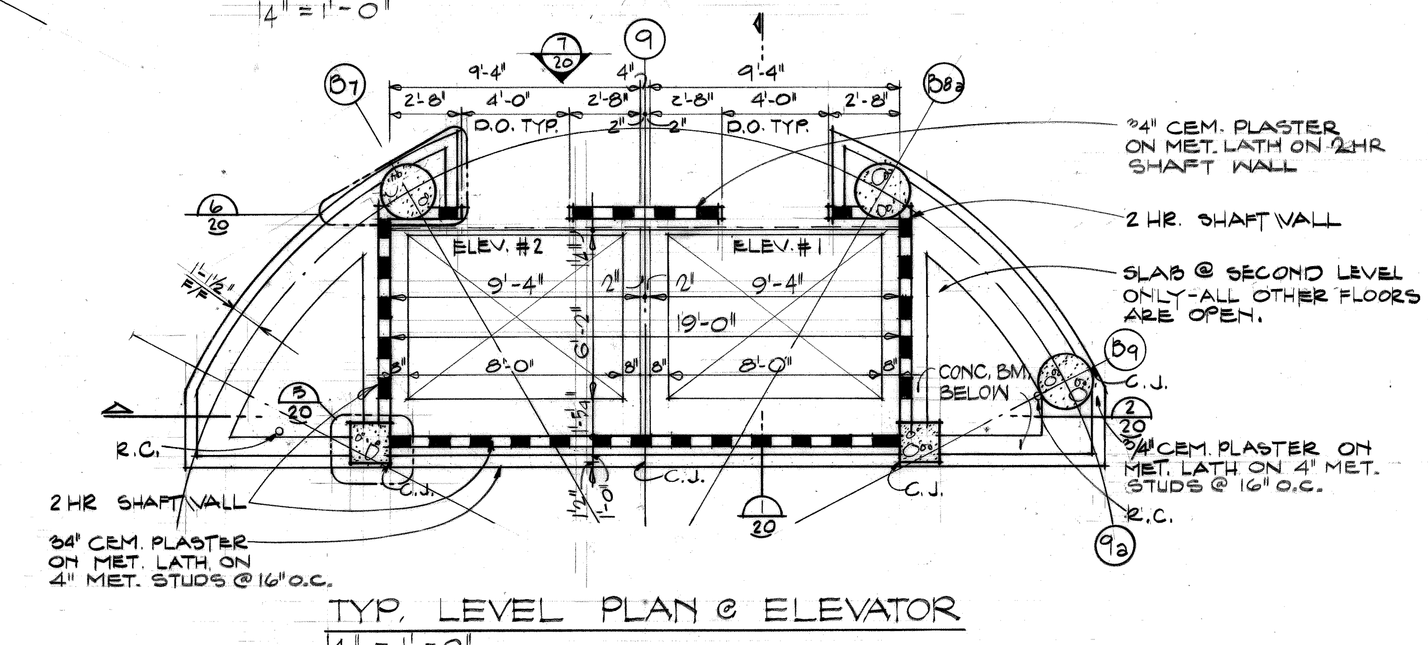

TYP. LEVEL PLAN @ ELEVATOR
1/4" = 1'-0"

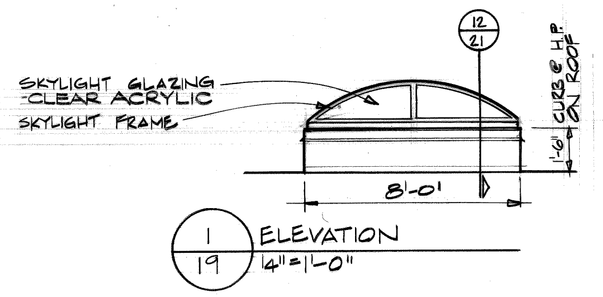

1/19 ELEVATION
4" = 1'-0"

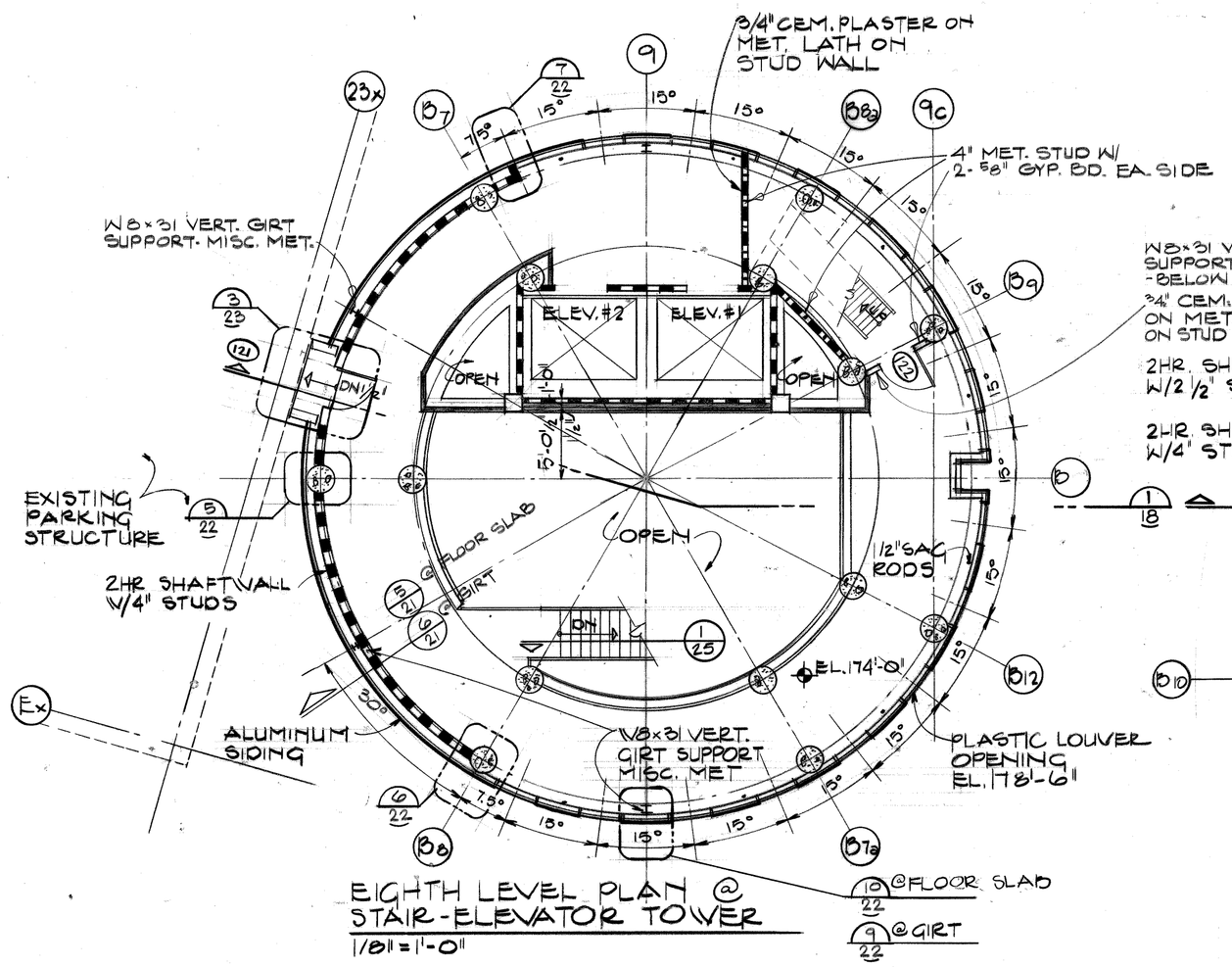

EIGHTH LEVEL PLAN @ STAIR-ELEVATOR TOWER
1/8" = 1'-0"

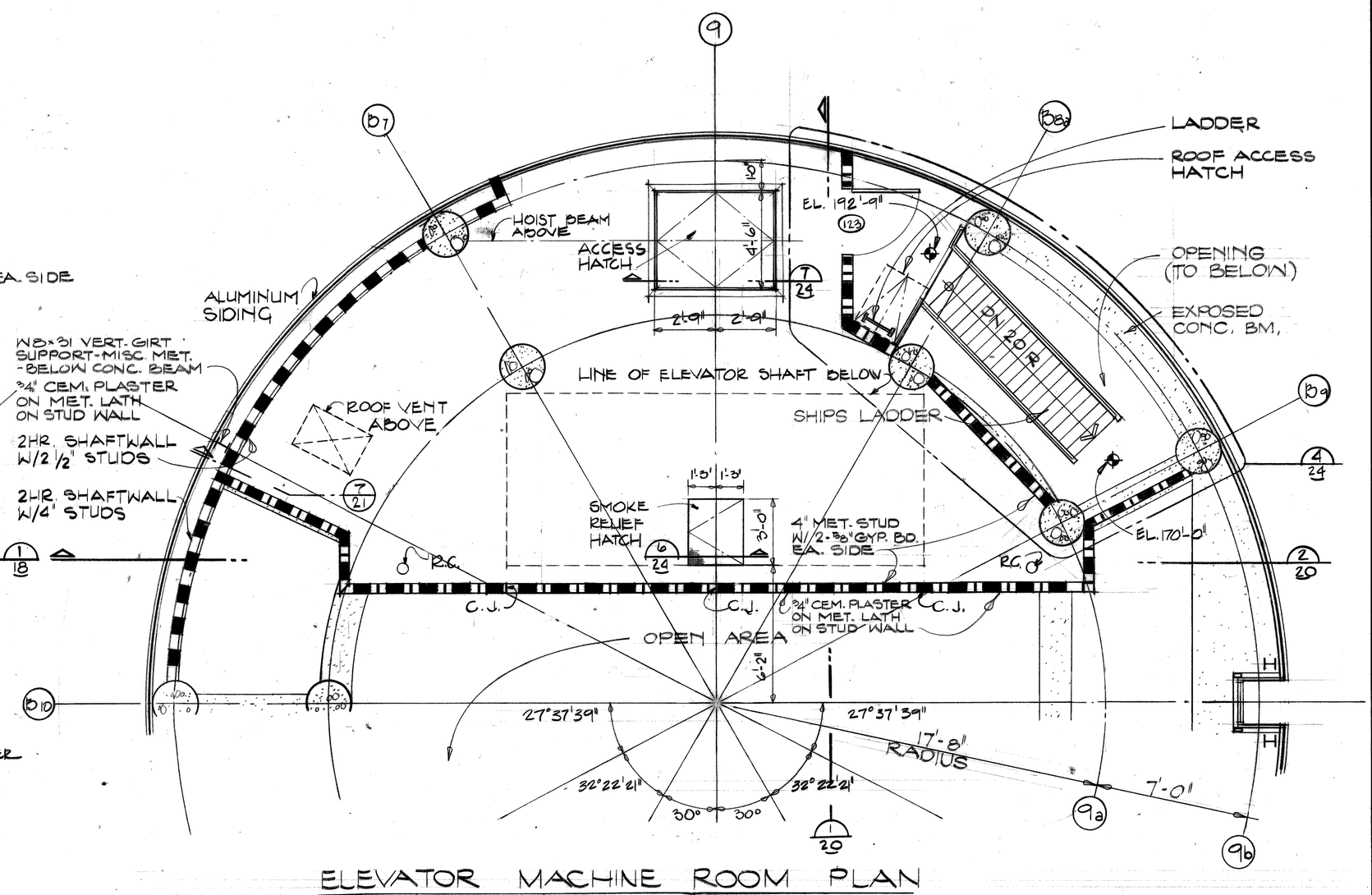

ELEVATOR MACHINE ROOM PLAN
1/4" = 1'-0"

Joe Louis Sports Arena
Pedestrian Walkway
For City Engineering Division

SH&G
Smith, Hinchman & Grylls Associates, Inc.
Architects Engineers Planners
455 West Fort Street
Detroit, Michigan 48226
(313)964-3000
SH&G Job. No. 11732C

OWNER	5-30-80
Issued For	Date
1-18-80	M.D.
Date	Drawn By
T. Mitch	
Dir. Architect/Engineer	
Correlation Check	
Project Manager	
Construction Administrative Div. Approval	
Division Approval	

Key Plan

Detail Number / Location or Detail Sheet

N

Drawing Title
PLANS AND PLAN DETAILS STAIR-ELEVATOR TOWER

15031A
Project No.
A-19
Drawing No.
AS NOTED
Scale

9-26-79

MC/PRM# 71858

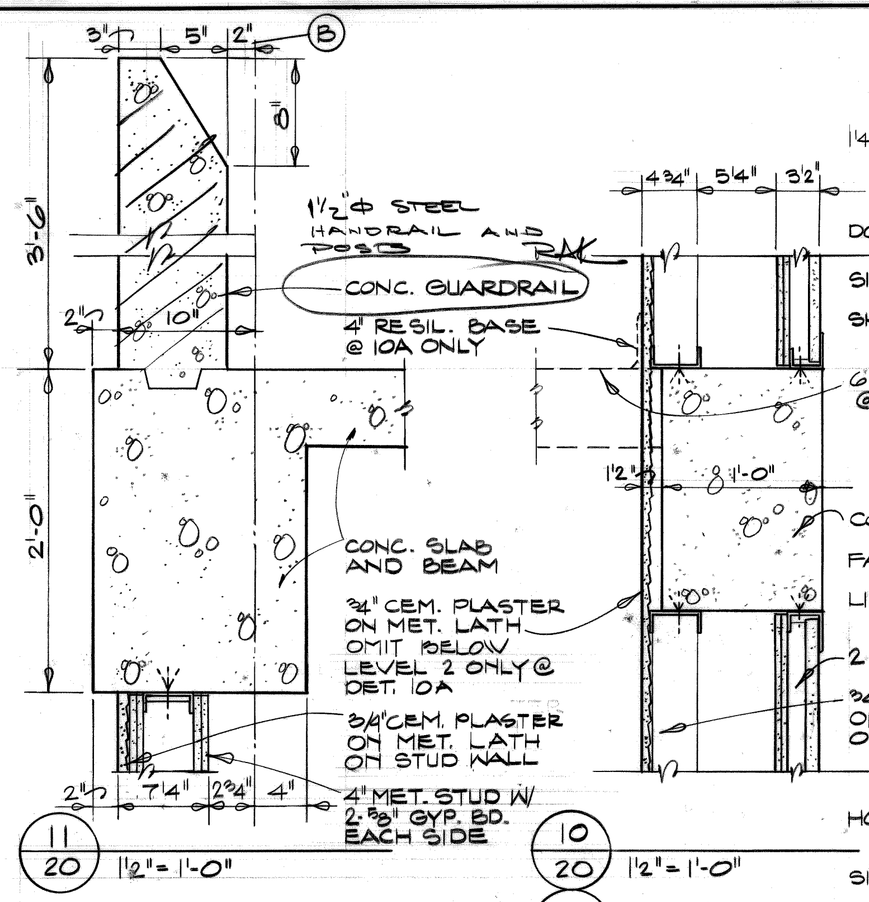

11/20 1½"=1'-0"

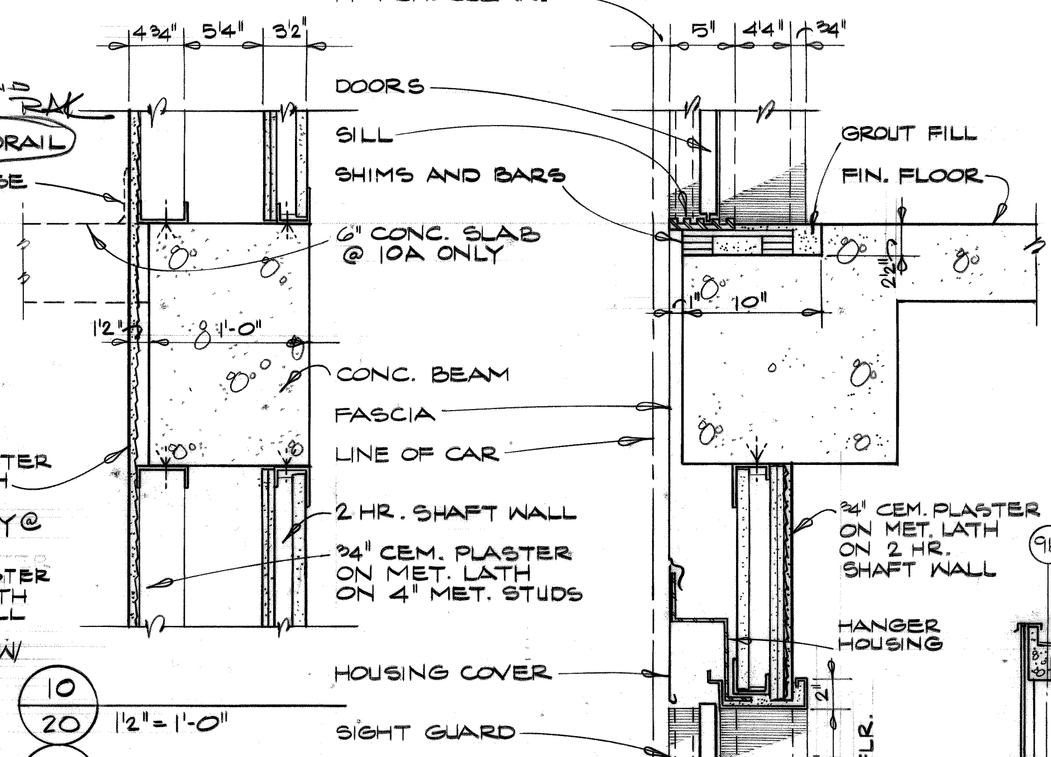

10/20 1½"=1'-0"

10A/20 AS NOTED

9/20 1½"=1'-0"

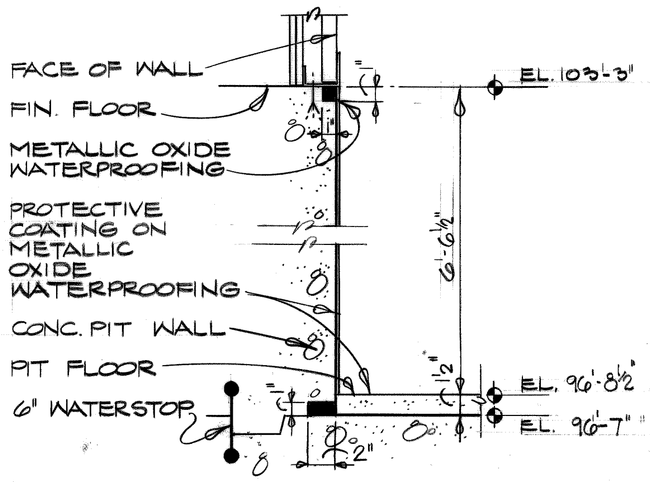

8/20 WATERPROOFING @ PIT WALL
1½"=1'-0"

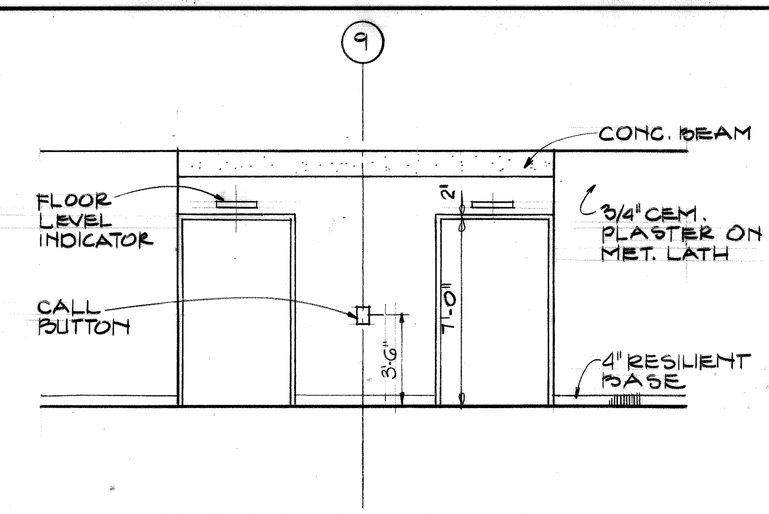

7/19 TYPICAL ELEVATION @ ELEVATOR ENTRANCE
4"=1'-0"

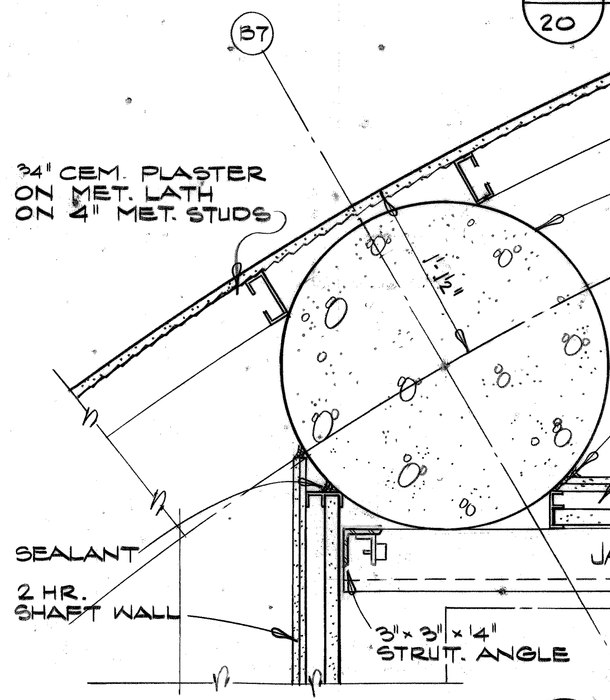

6/19 PLAN DETAIL
1½"=1'-0"

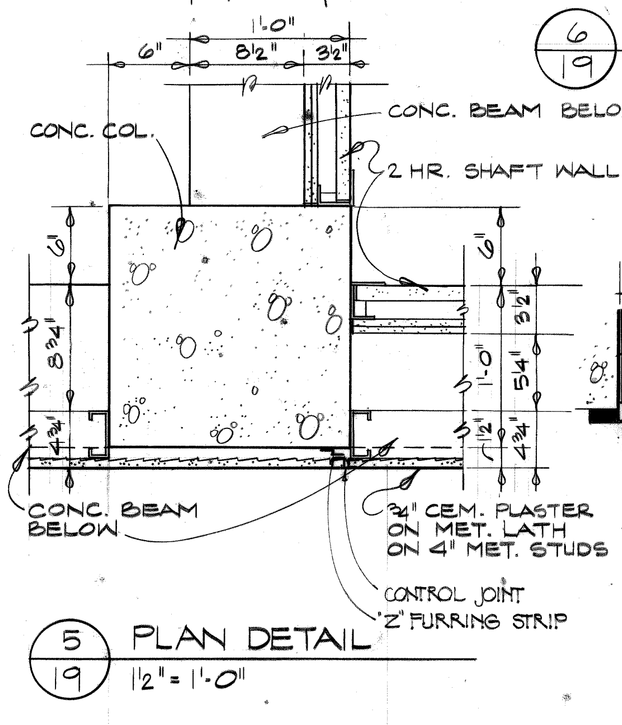

5/19 PLAN DETAIL
1½"=1'-0"

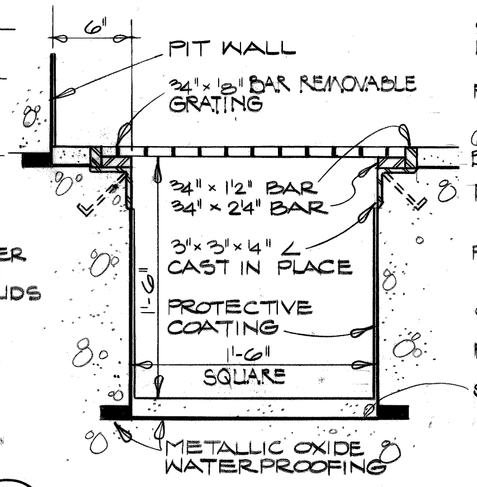

4/19,20 PIT SUMP
1½"=1'-0"

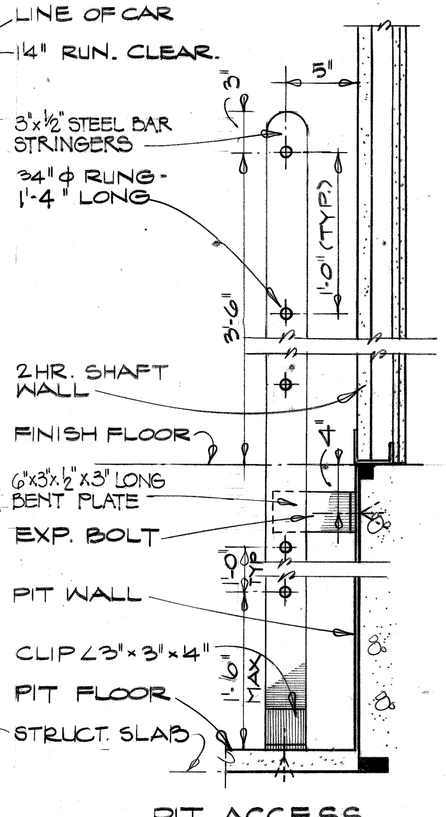

3/19,20 PIT ACCESS LADDER
1½"=1'-0"

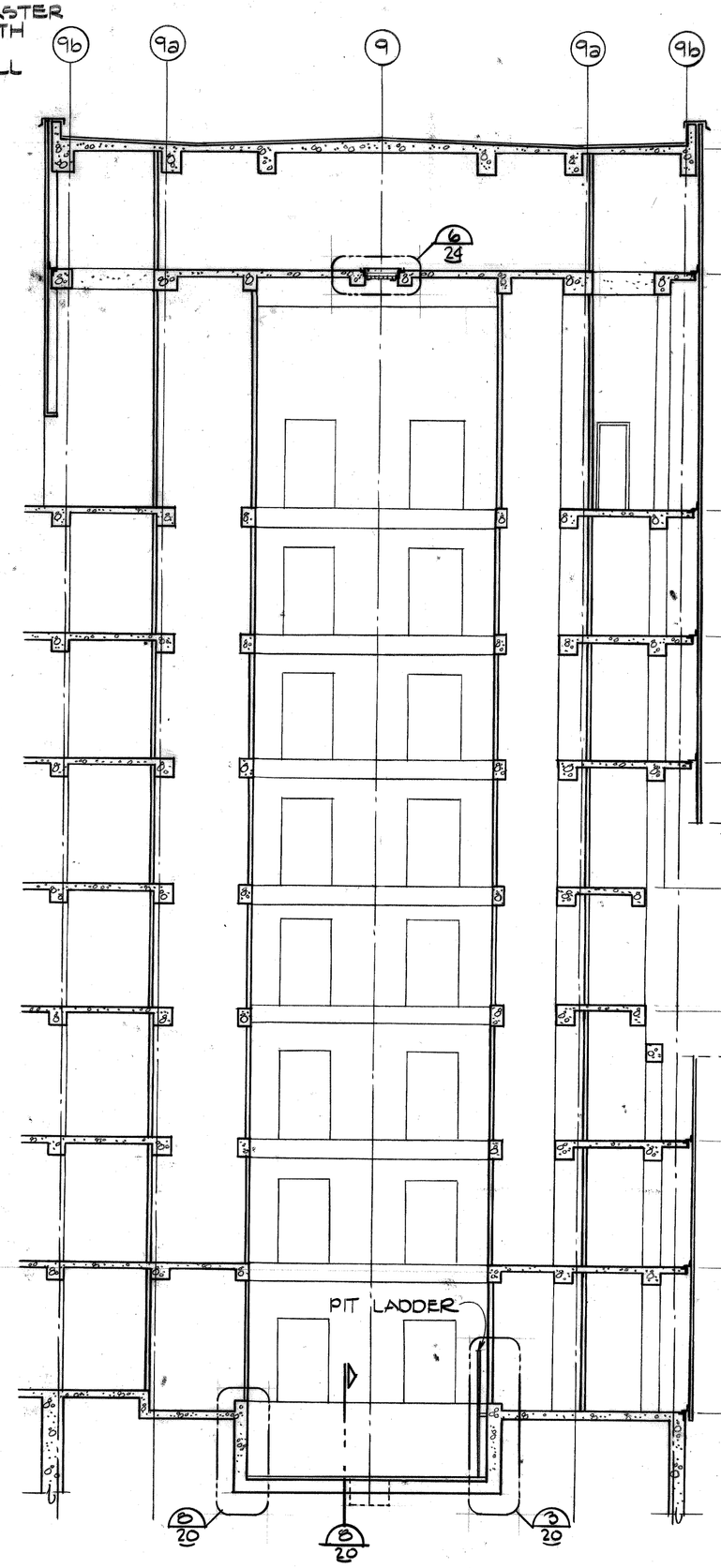

2/19 ⅛"=1'-0"

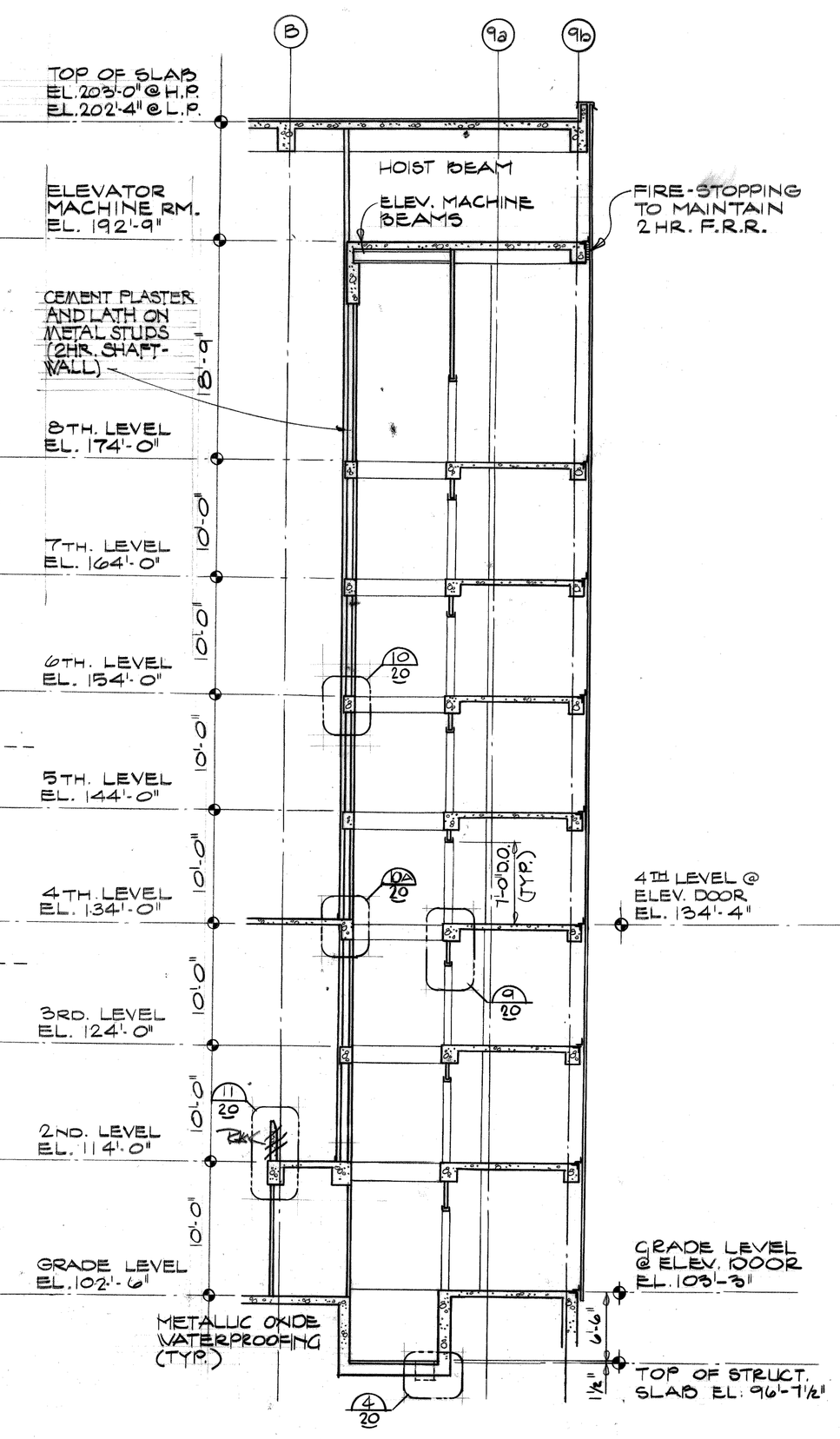
TOP OF SLAB EL. 203'-0" @ H.P. EL. 202'-4" @ L.P.
ELEVATOR MACHINE RM. EL. 192'-9"
CEMENT PLASTER AND LATH ON METAL STUDS (2HR. SHAFT-WALL)
8TH. LEVEL EL. 174'-0"
7TH. LEVEL EL. 164'-0"
6TH. LEVEL EL. 154'-0"
5TH. LEVEL EL. 144'-0"
4TH. LEVEL @ ELEV. DOOR EL. 134'-4"
3RD. LEVEL EL. 124'-0"
2ND. LEVEL EL. 114'-0"
GRADE LEVEL EL. 102'-6"
HOIST BEAM
ELEV. MACHINE BEAMS
FIRE-STOPPING TO MAINTAIN 2 HR. F.R.R.
10'-0"
10'-0"
10'-0"

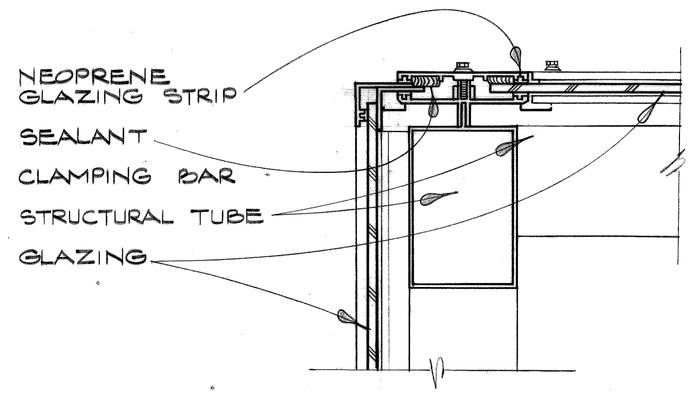

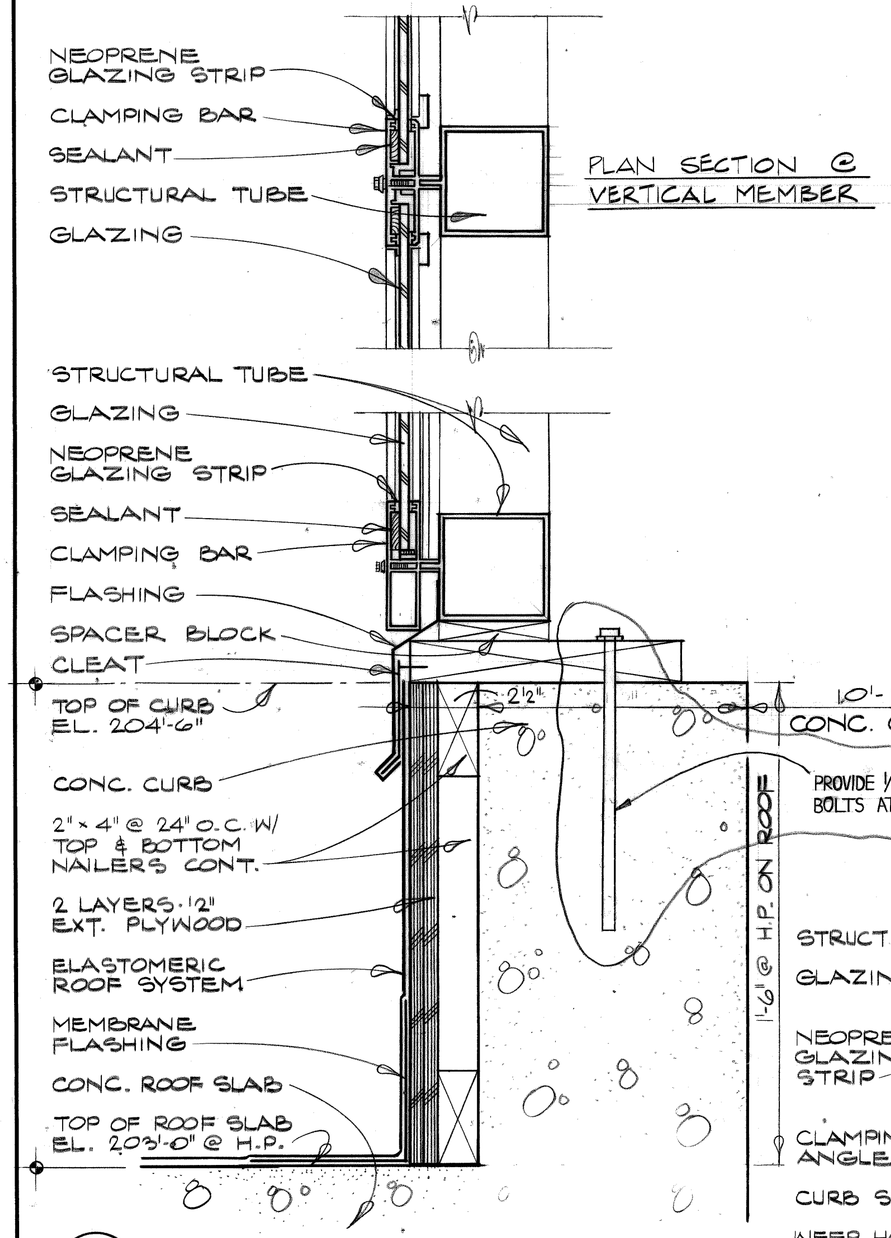

PLAN SECTION @ VERTICAL MEMBER

12/19 3" = 1'-0"

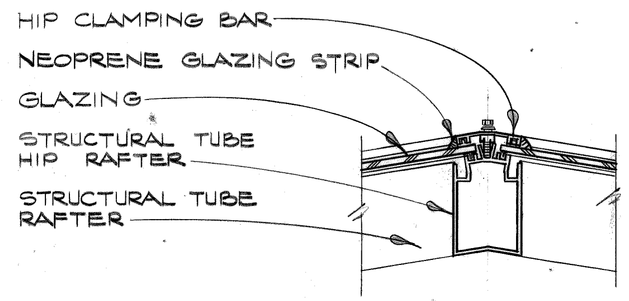

11/14 3" = 1'-0"

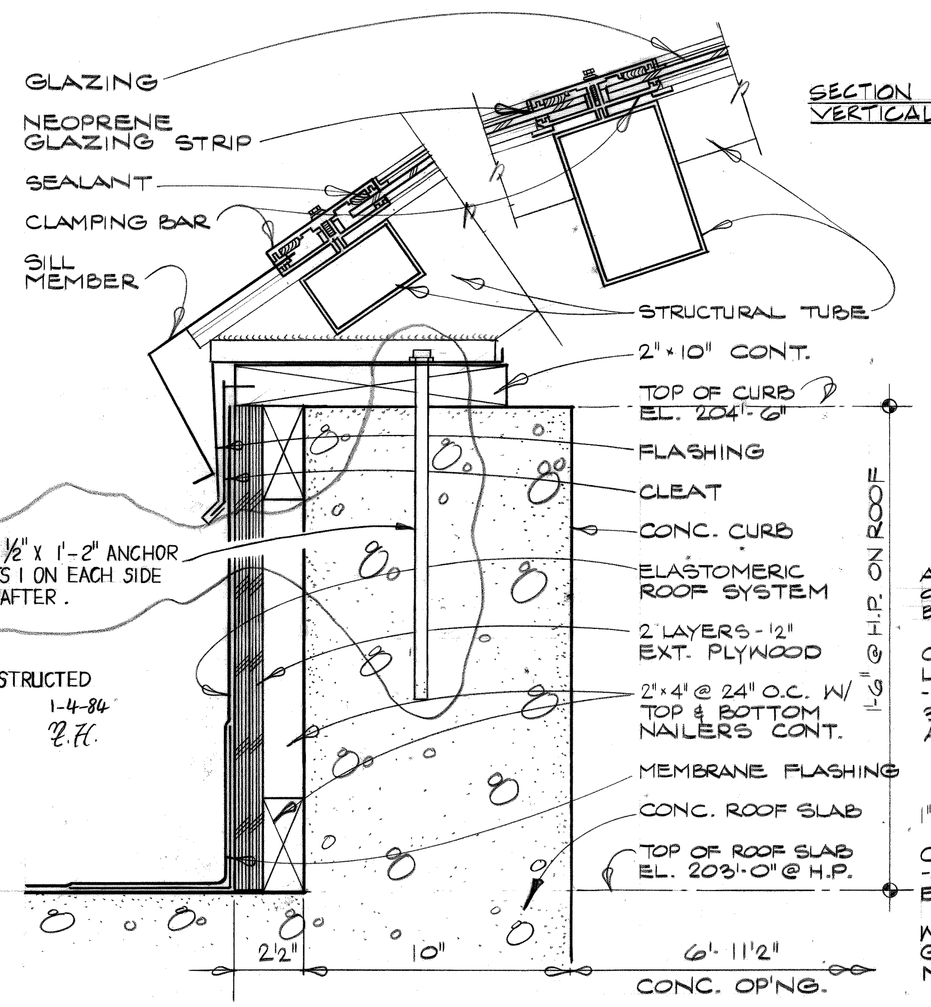

SECTION @ VERTICAL MEMBER

10/19 3" = 1'-0"

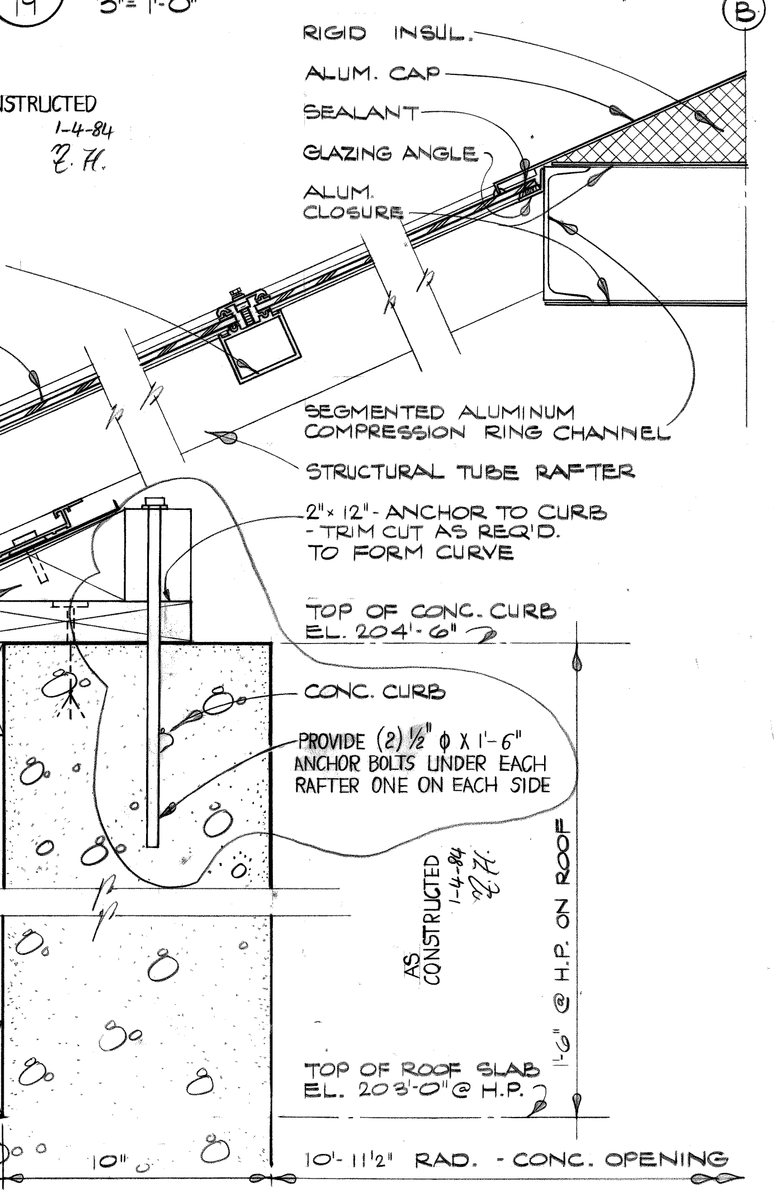

9/14 3" = 1'-0"

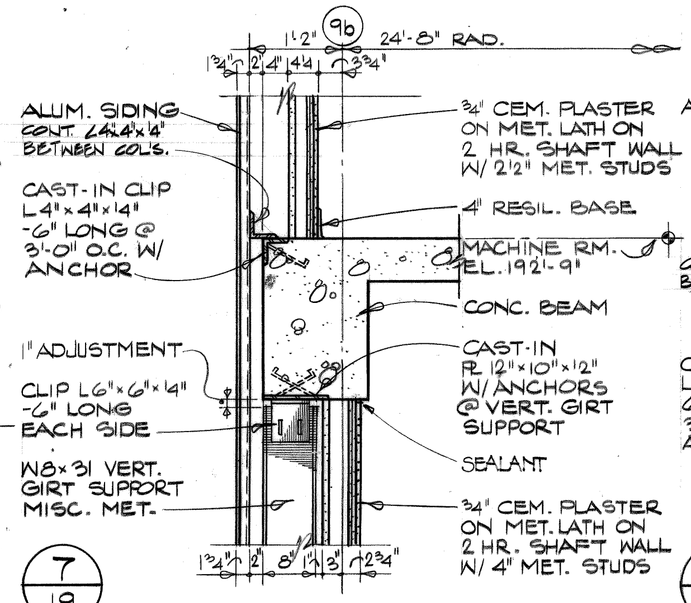

7/19

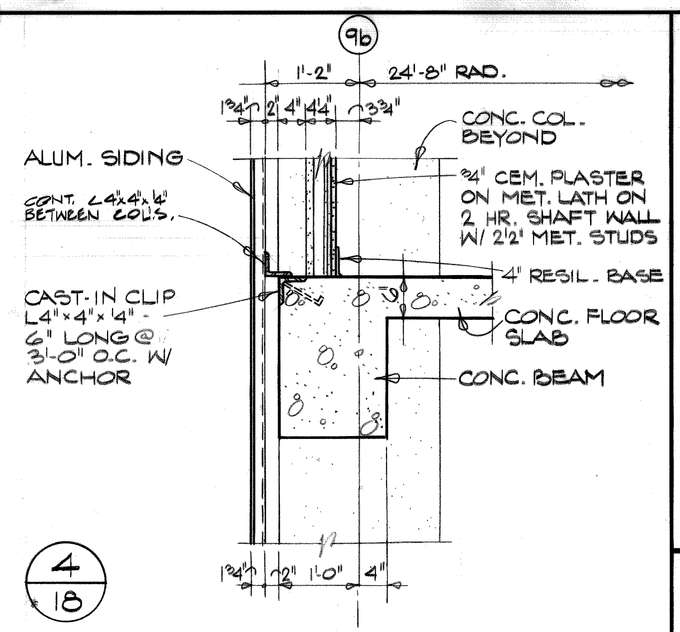

4/18

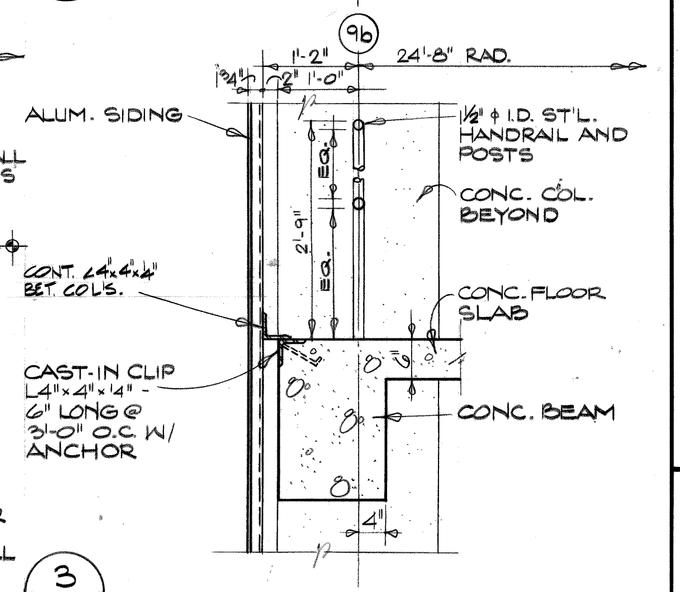

3/18

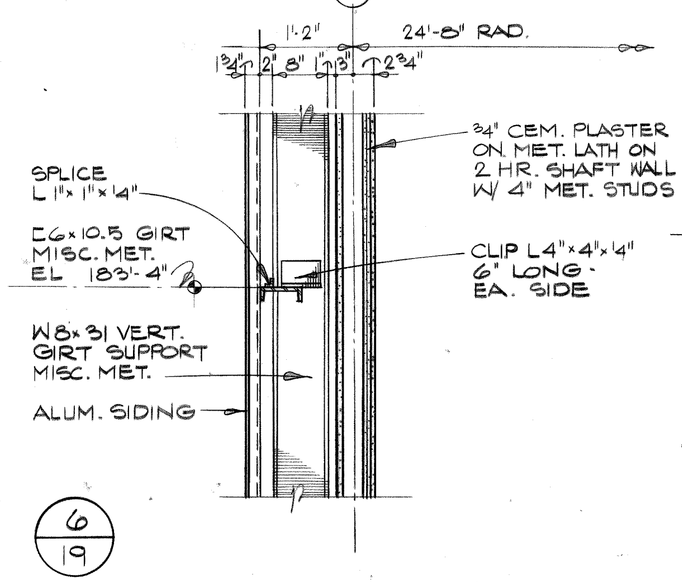

6/19

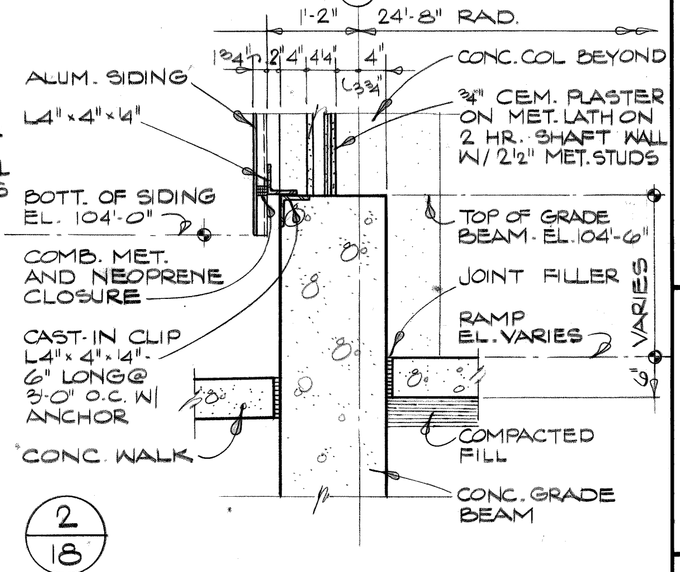

2/18

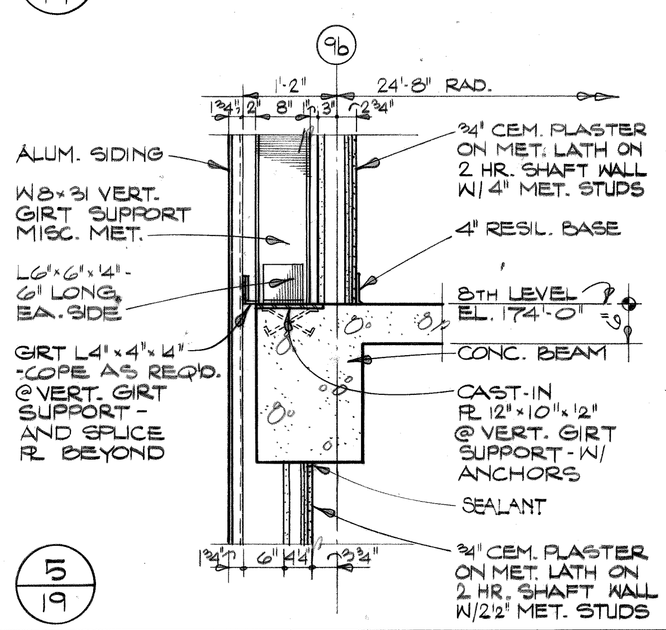

5/19

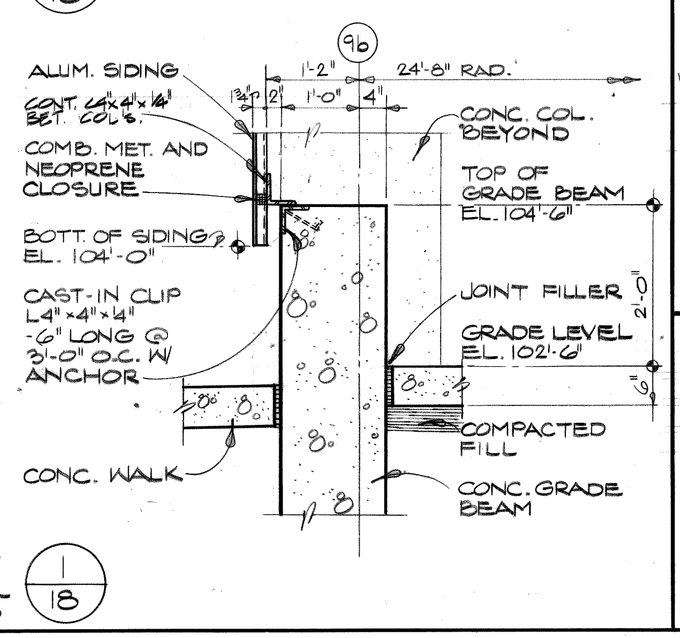

1/18

Joe Louis Sports Arena

Pedestrian Walkway

For City Engineering Division

SH&G
Smith, Hinchman & Grylls Associates, Inc.
Architects Engineers Planners
455 West Fort Street
Detroit, Michigan 48226
(313)964-3000

SH&G Job. No. 11732C

OWNER Issued For	5-30-80 Date
1-18-80 Date	M.D. Drawn By
Div. Architect/Engineer	
Correlation Check	
Project Manager	
Construction Administrative Div. Approval	
Division Approval	

Key Plan

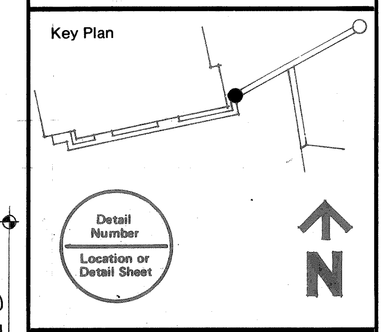

Drawing Title
DETAILS STAIR-ELEVATOR TOWER AND SKYLIGHT

15031A
Project No.
A-21
Drawing No.
3/4" = 1'-0" U.O.N.
Scale

22 OF 96

9-26-79

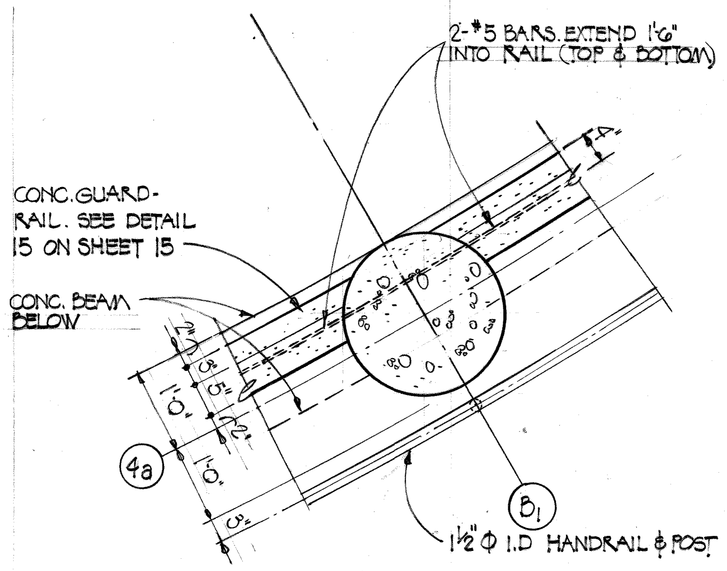

15/14 PLAN
¾"=1'-0"

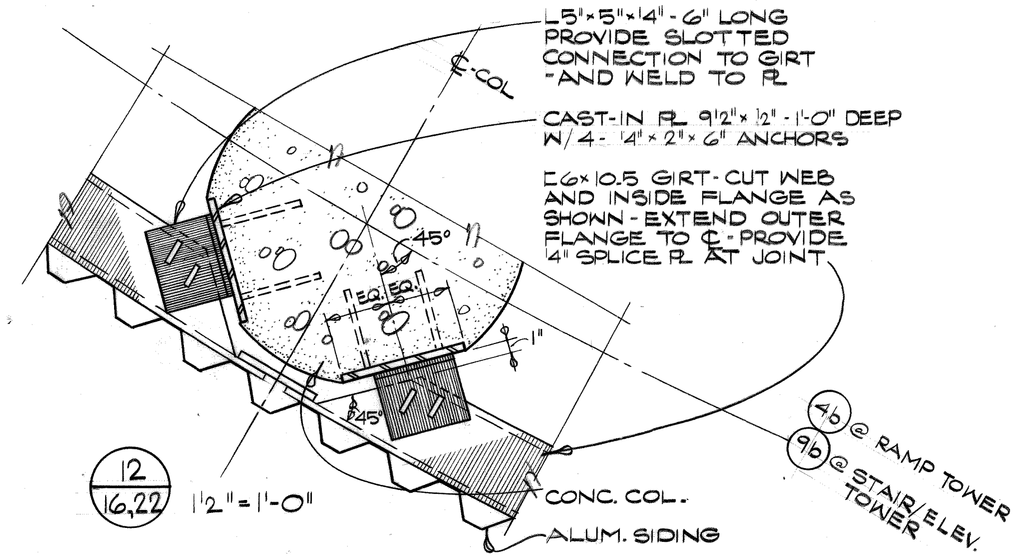

12/16,22 1½"=1'-0"

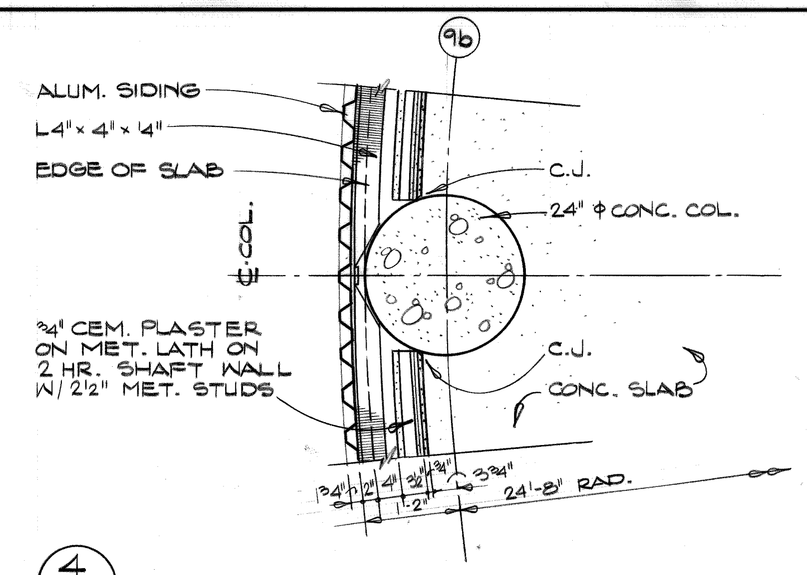

4/18 ¾"=1'-0"

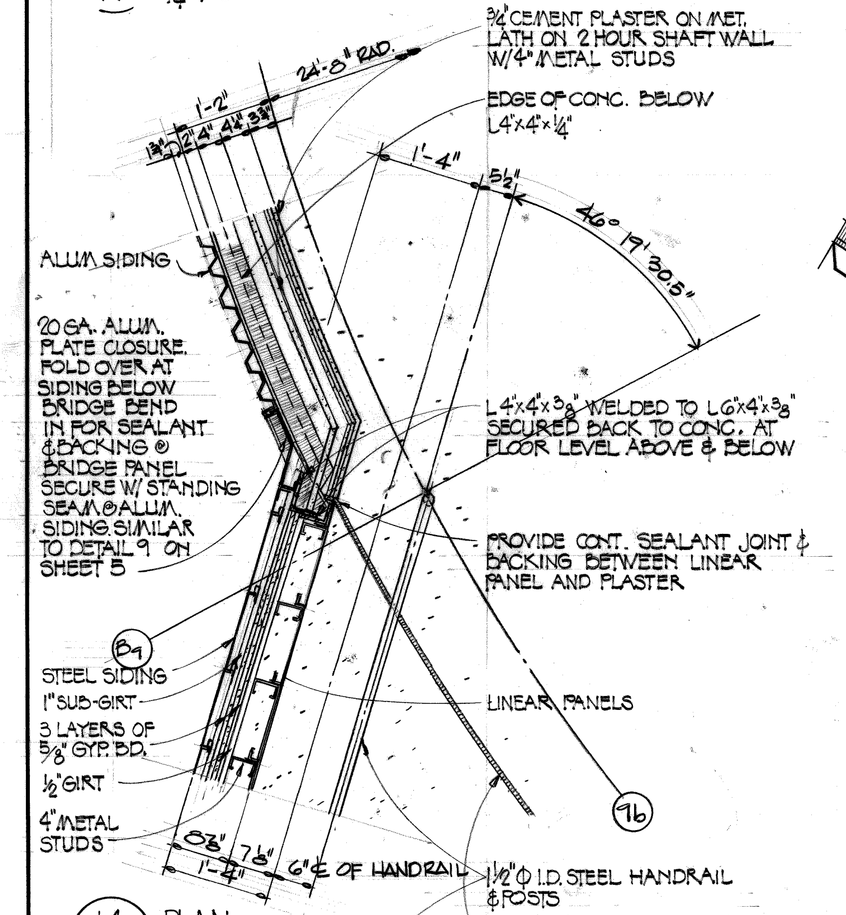

14/18 PLAN
¾"=1'-0"

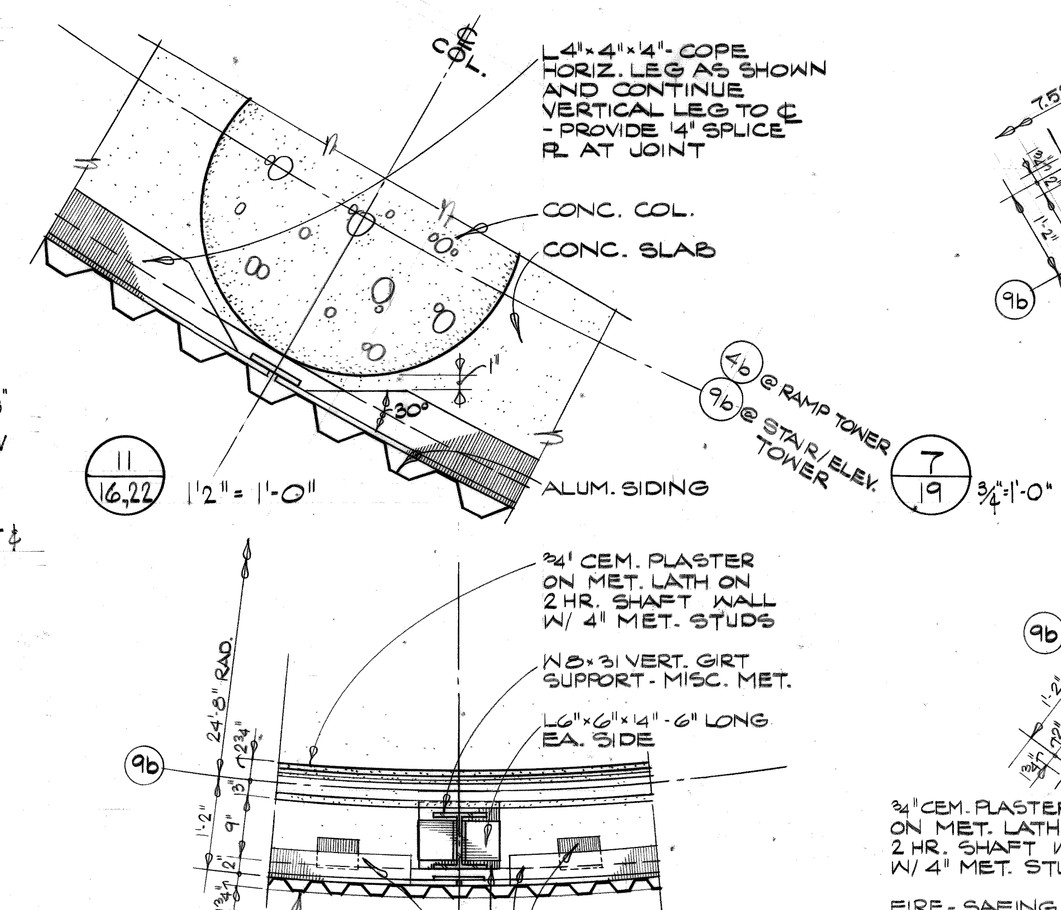

11/16,22 1½"=1'-0"

7/19 ¾"=1'-0"

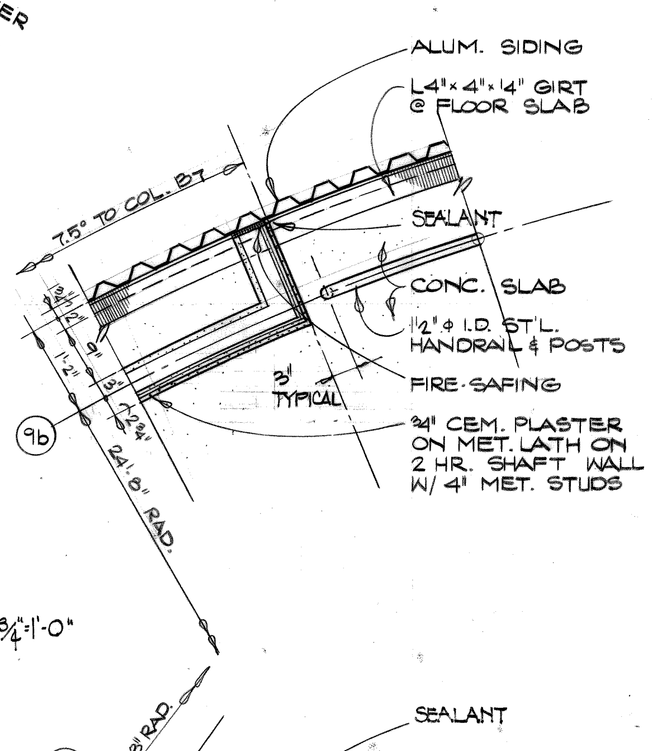

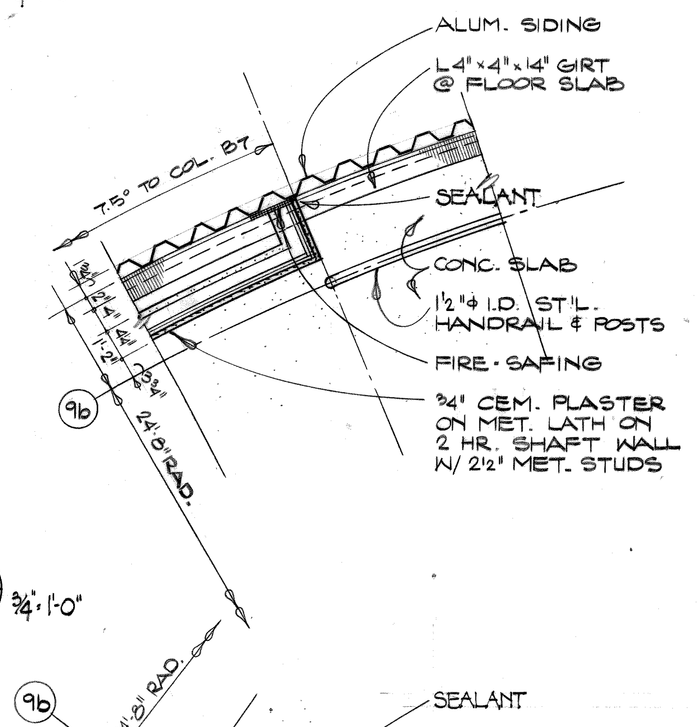

3/18 ¾"=1'-0"

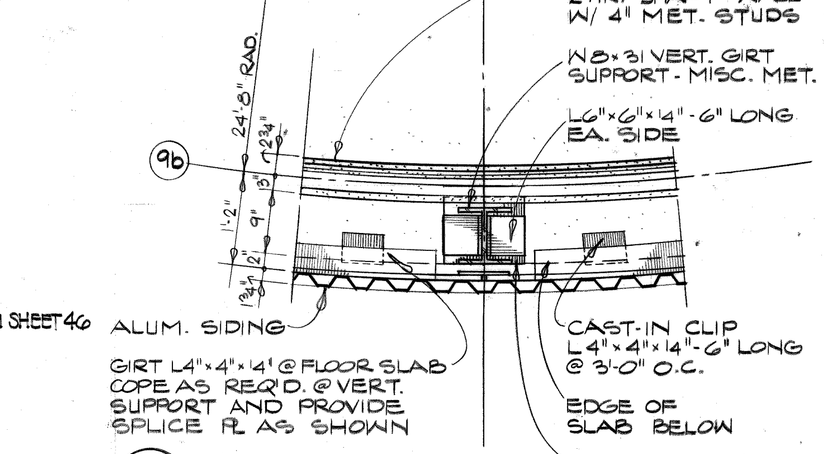

10/19 ¾"=1'-0"

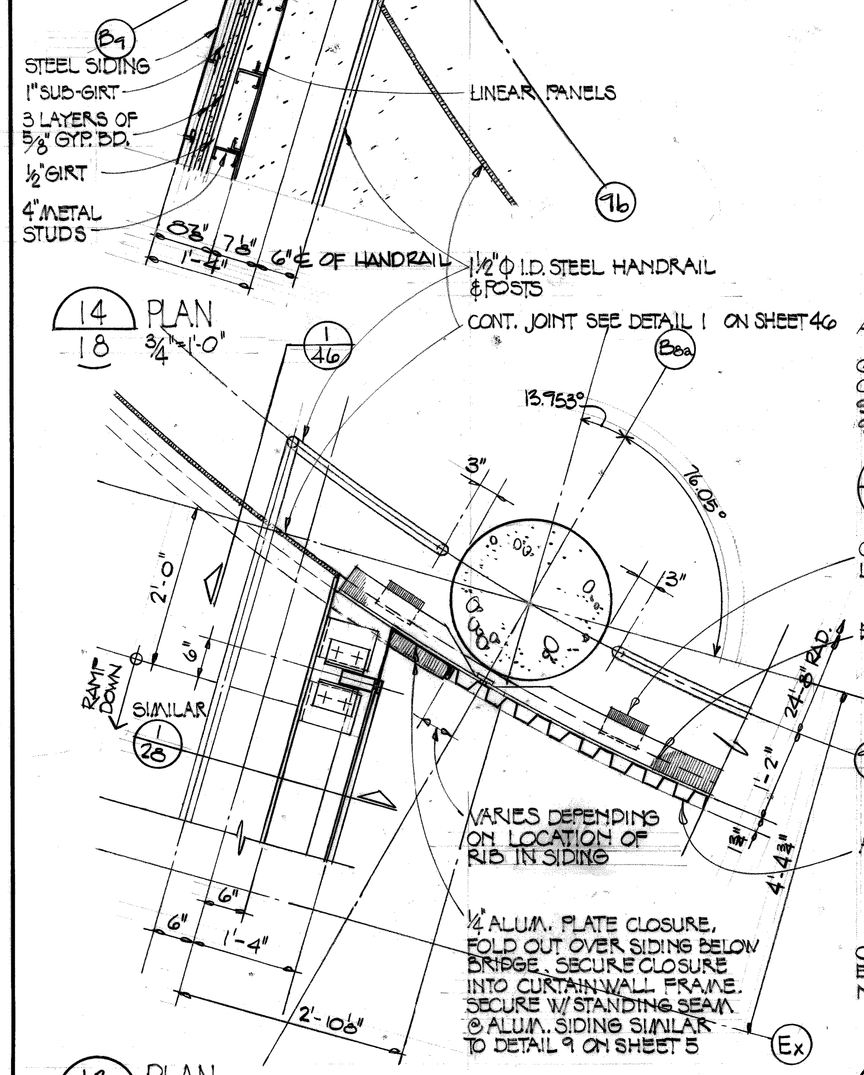

13/18 PLAN
¾"=1'-0"

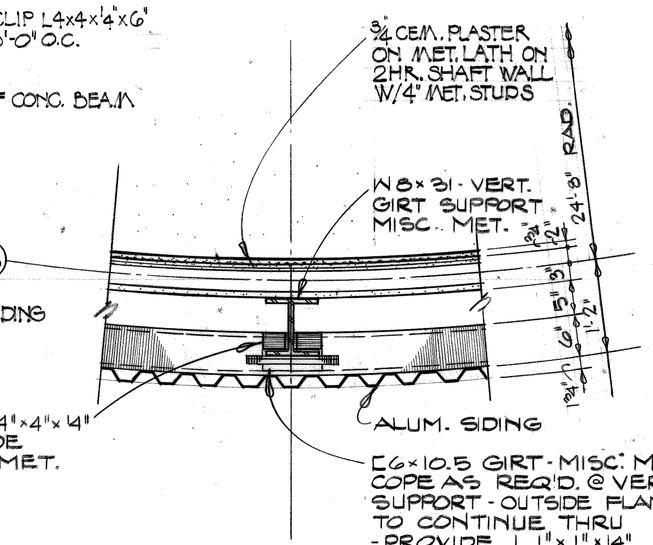

9/19 ¾"=1'-0"

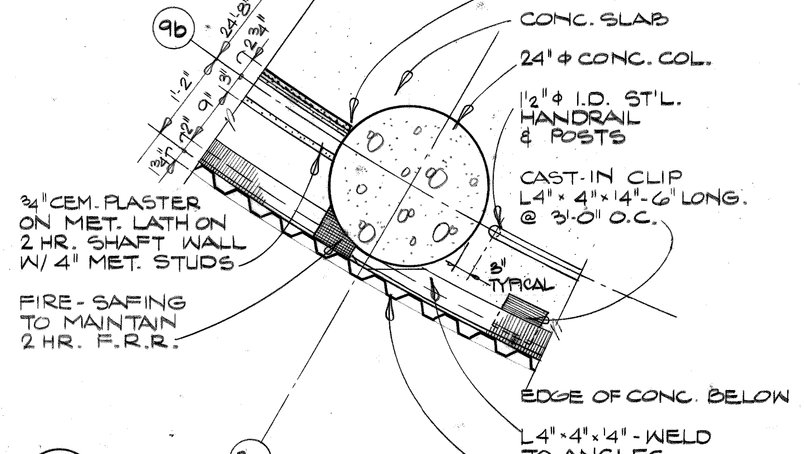

6/19 ¾"=1'-0"

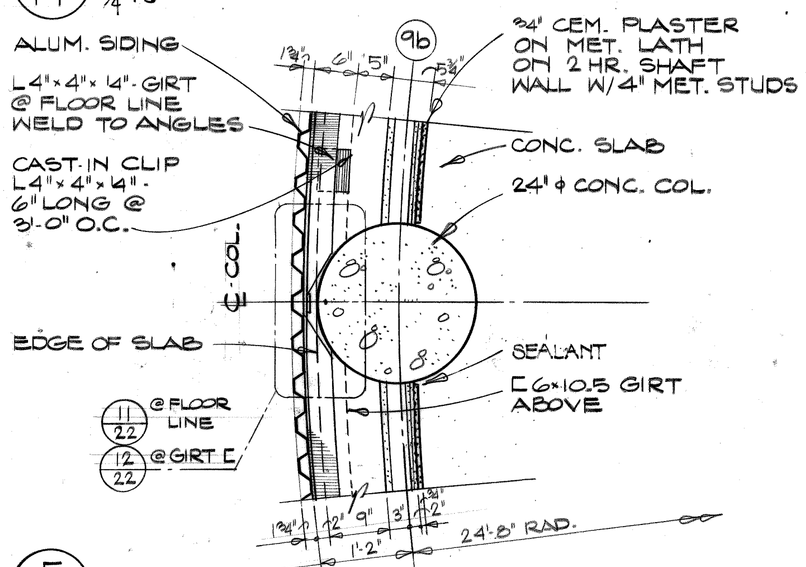

5/19 ¾"=1'-0"

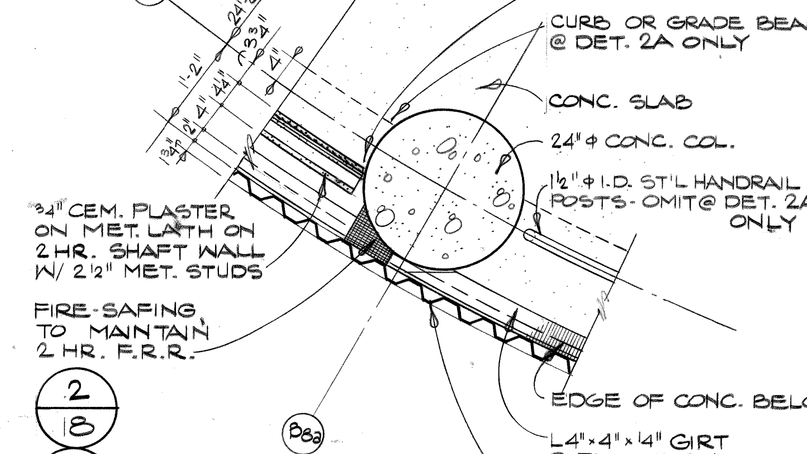

2/18
2A/18 ¾"=1'-0"

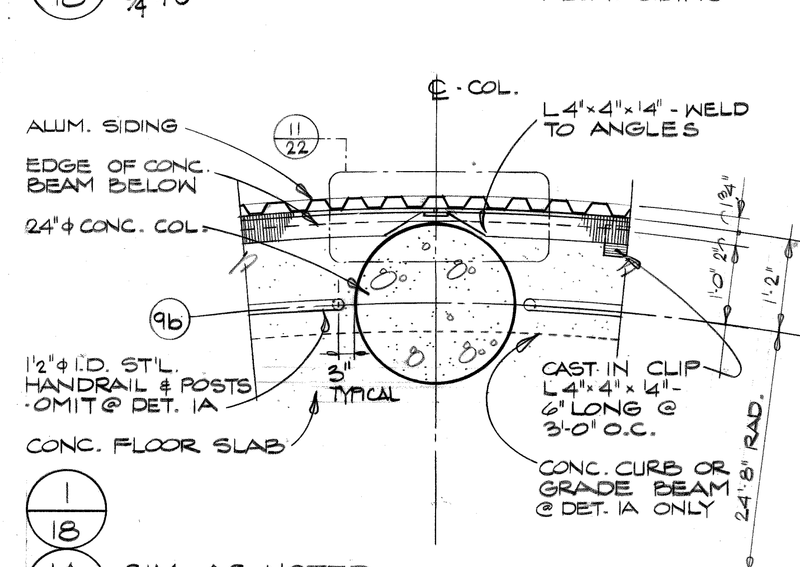

1/18
1A/18 SIM. AS NOTED
¾"=1'-0"

Joe Louis Sports Arena

Pedestrian Walkway

For City Engineering Division

SH&G
Smith, Hinchman & Grylls Associates, Inc.
Architects Engineers Planners
455 West Fort Street
Detroit, Michigan 48226
(313)964-3000

SH&G Job. No. 11732C

OWNER	5-30-80
Issued For	Date
1-18-80	M.D.
Date	Drawn By
City Architect/Engineer	
Correlation Check	
Project Manager	
Construction Administrative Div. Approval	
Division Approval	

Key Plan

Detail Number / Location or Detail Sheet

N

Drawing Title
DETAILS STAIR-ELEVATOR TOWER

15031A
Project No.
A-22
Drawing No.
AS NOTED
Scale

9-26-79

MC/PRM• 71858

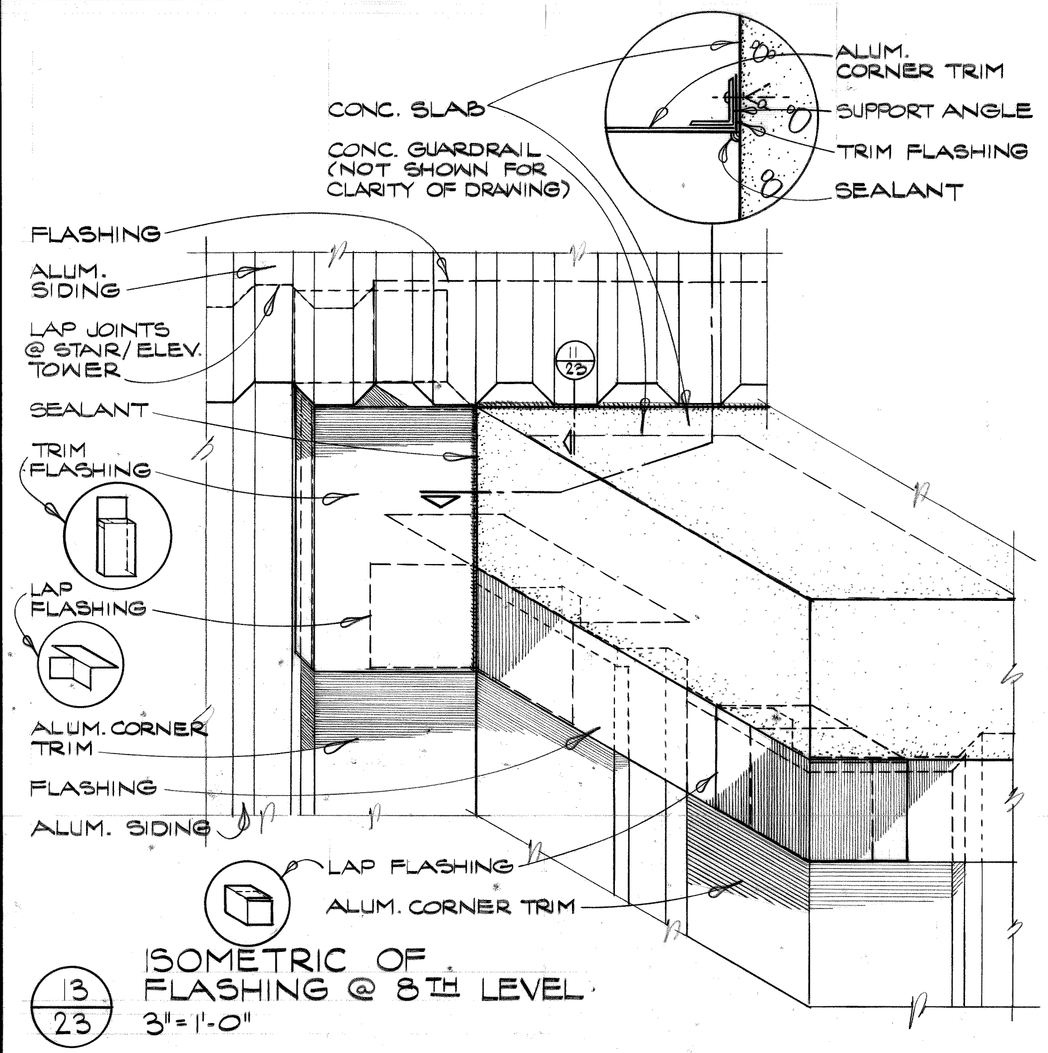

13/23 ISOMETRIC OF FLASHING @ 8TH LEVEL
3" = 1'-0"

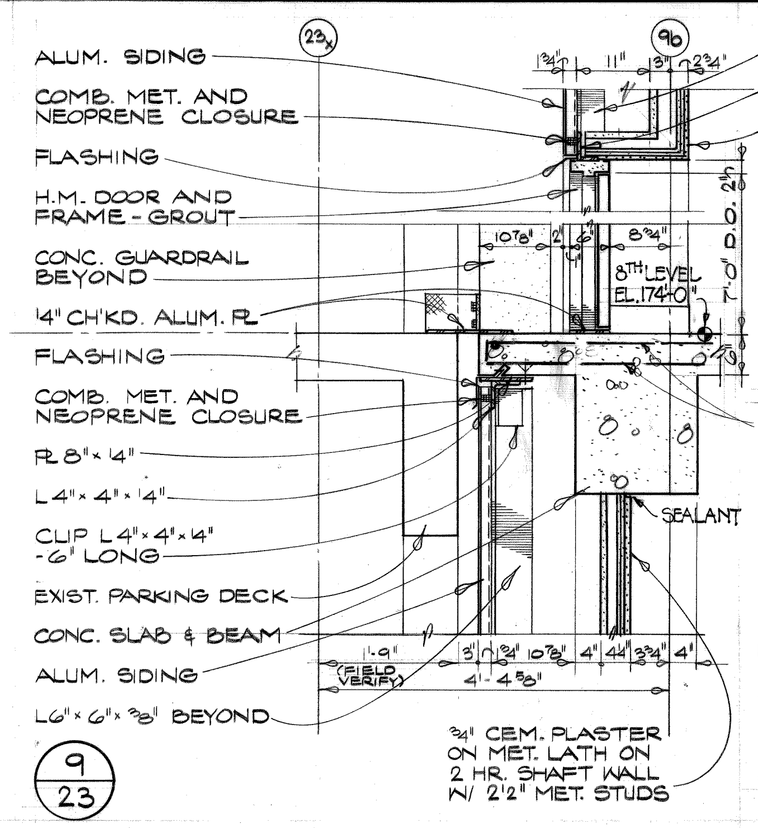

9/23

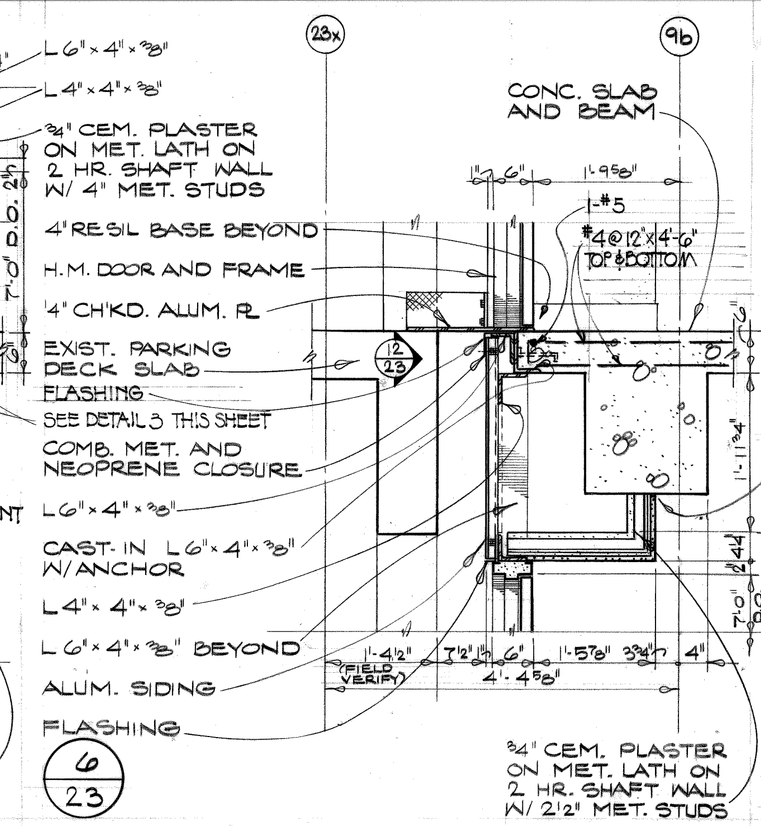

6/23

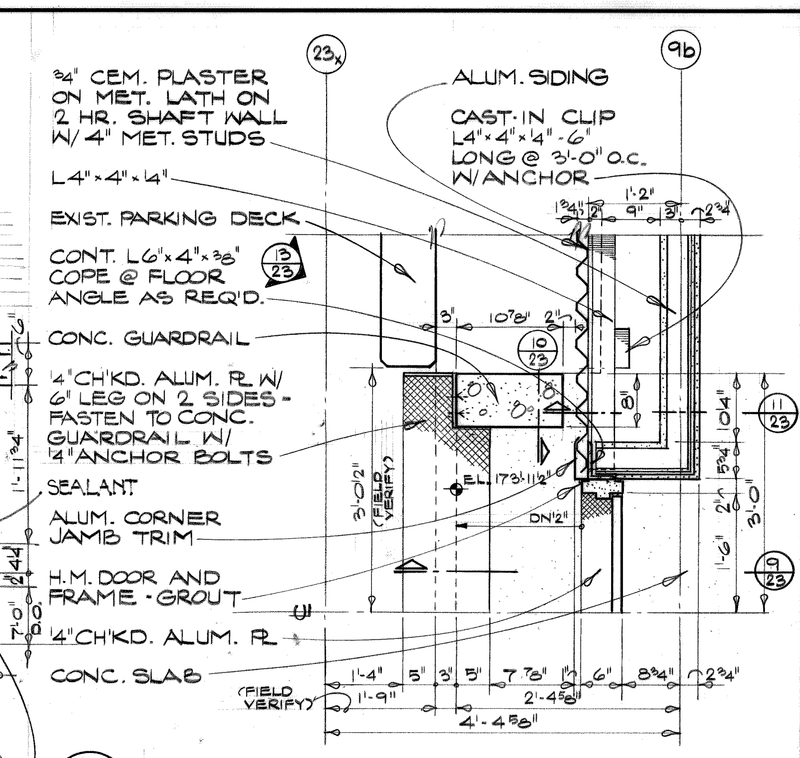

3/19 PLAN @ 8TH LEVEL

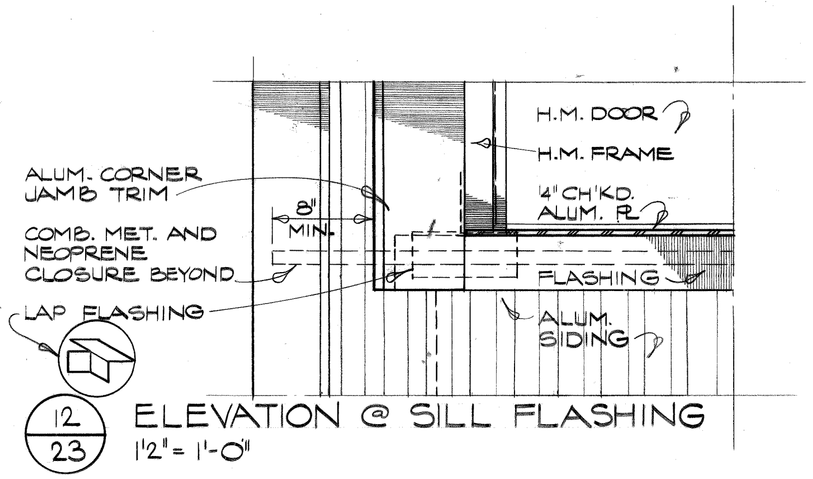

12/23 ELEVATION @ SILL FLASHING
1 1/2" = 1'-0"

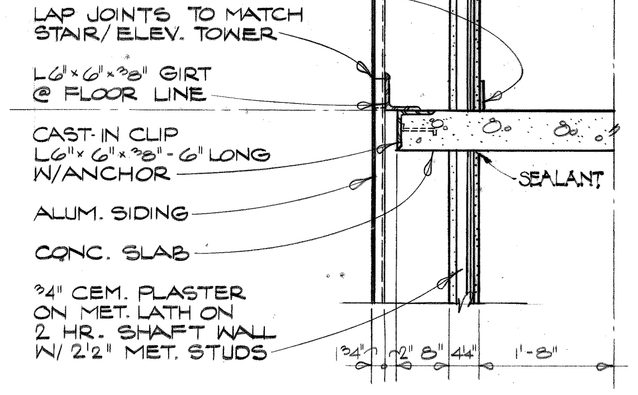

8/23

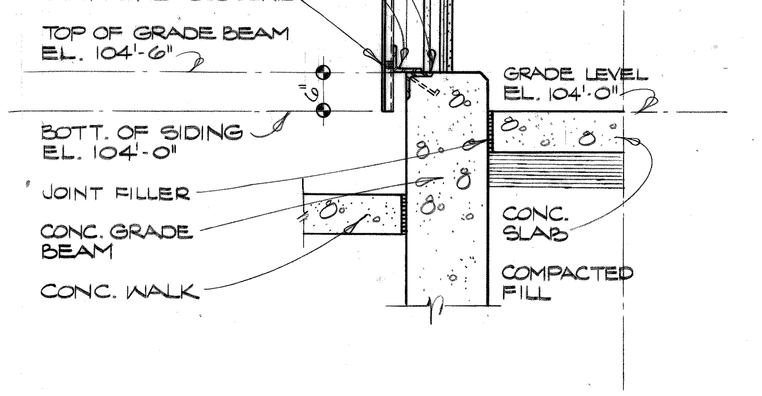

5/23

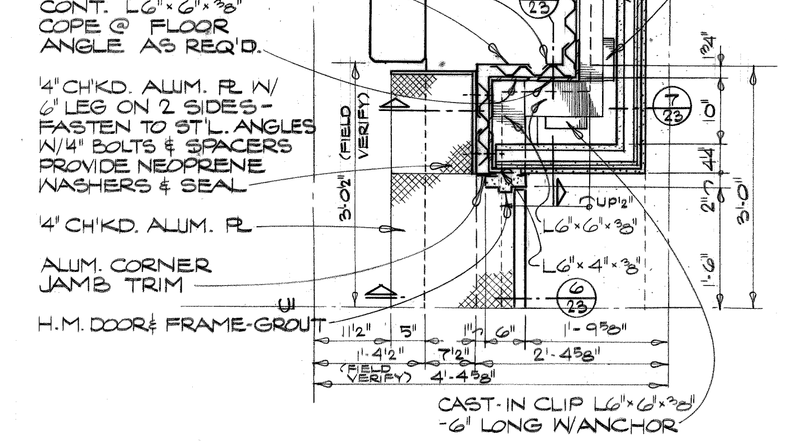

2/18 PLAN @ TYPICAL LEVEL

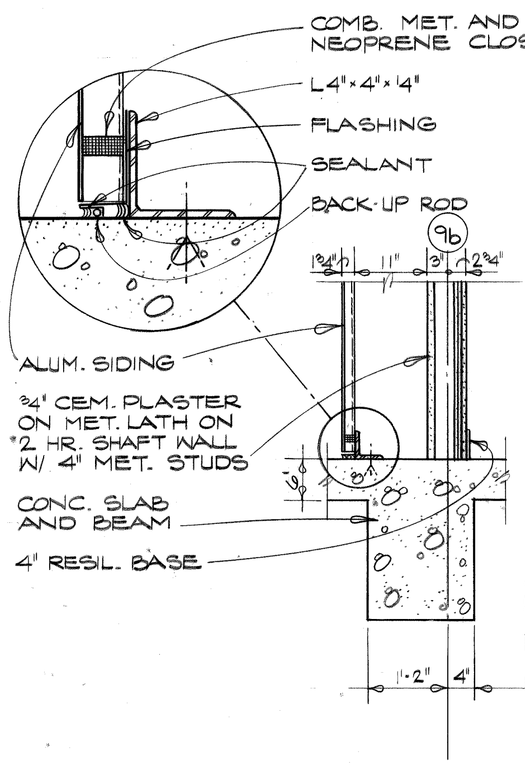

11/23

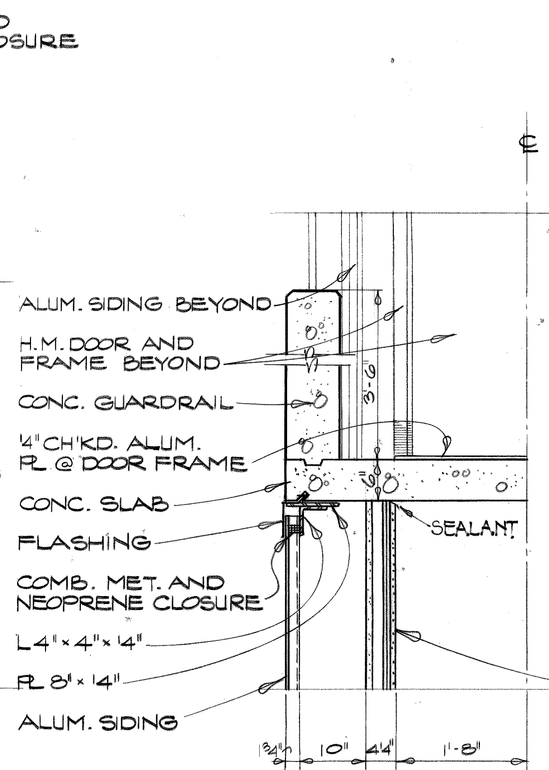

10/23

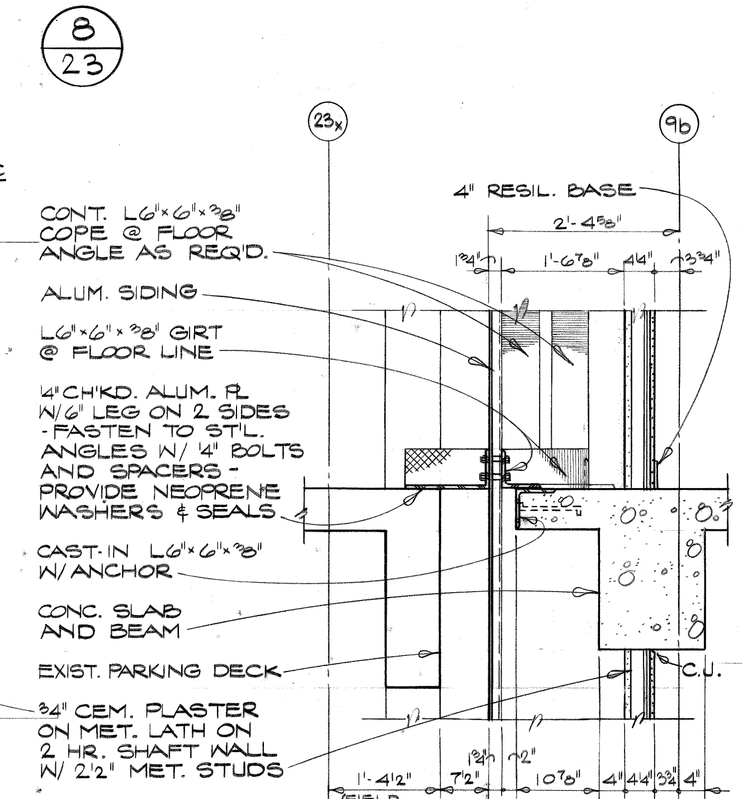

7/23

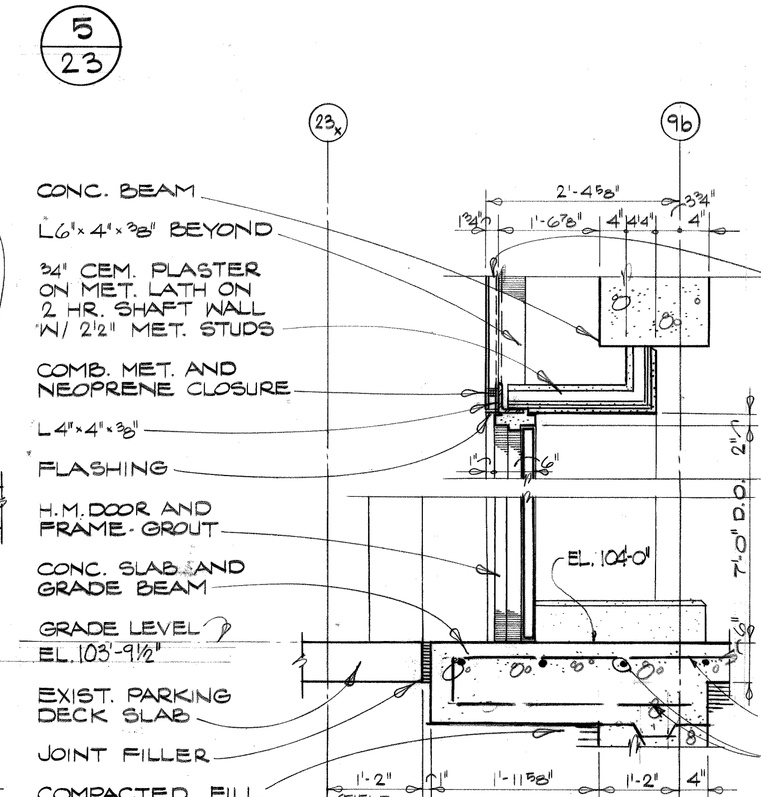

4/23

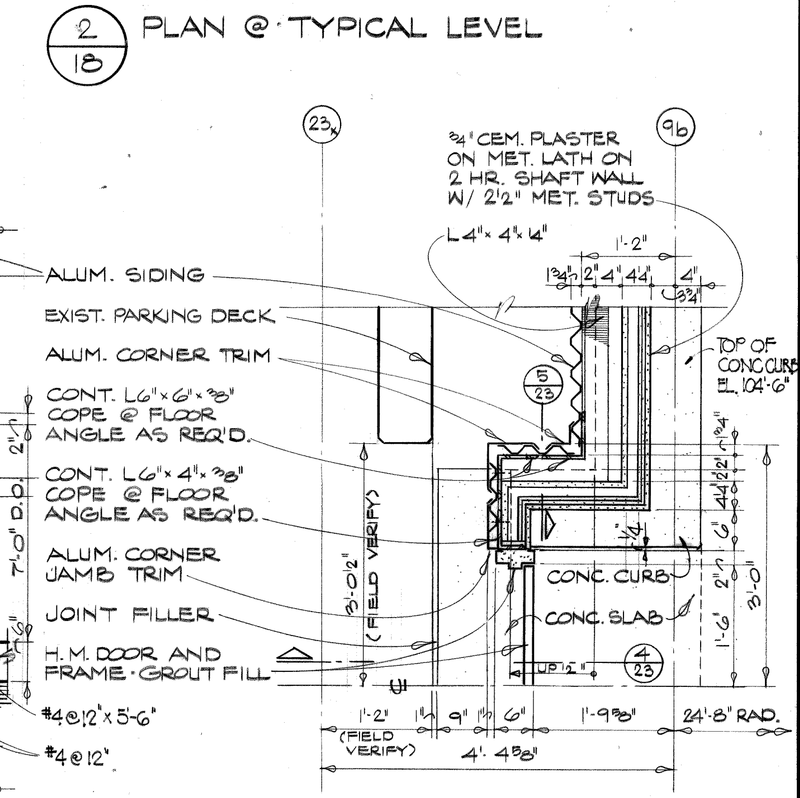

1/18 PLAN @ GRADE LEVEL

Joe Louis Sports Arena

Pedestrian Walkway

For City Engineering Division

SH&G
Smith, Hinchman & Grylls Associates, Inc.
Architects Engineers Planners
455 West Fort Street
Detroit, Michigan 48226
(313)964-3000

SH&G Job. No. 11732C

OWNER Issued For — 5-30-80 Date

1-18-80 Date — M.D. Drawn By
Div. Architect/Engineer
Correlation Check
Project Manager
Construction Administrative Div. Approval
Division Approval

Key Plan

Detail Number / Location or Detail Sheet

N

Drawing Title
DETAILS CONNECTION STAIR-ELEVATOR TOWER TO PARKING DECK

15031A Project No.
A-23 Drawing No.
3/4" = 1'-0" U.O.N. Scale

24 OF 916

9-26-79

MC/PRM• 71858

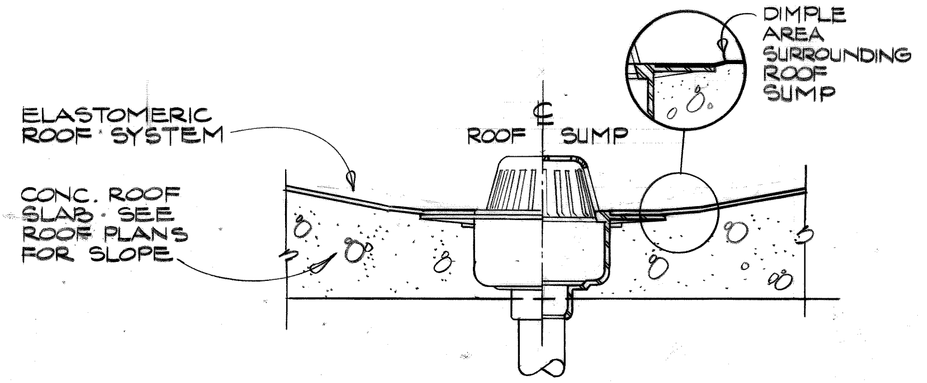

9/19 ROOF SUMP
1½" = 1'-0"

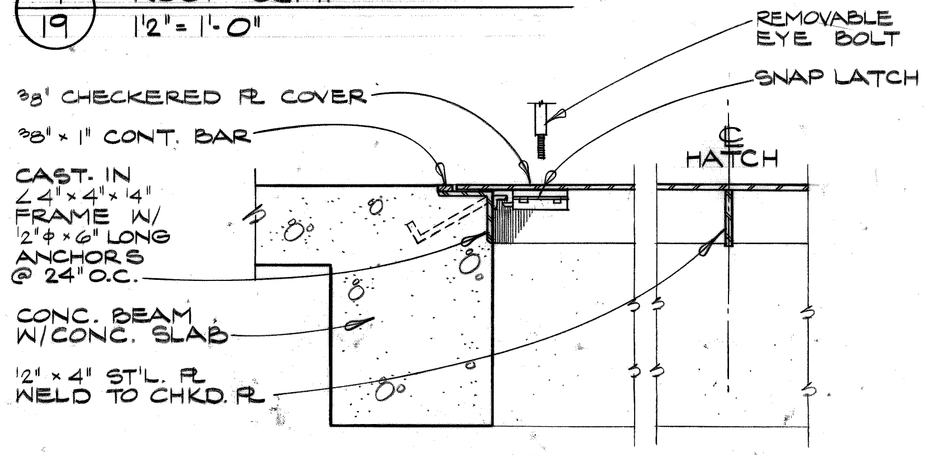

7/19 FLOOR HATCH
1½" = 1'-0"

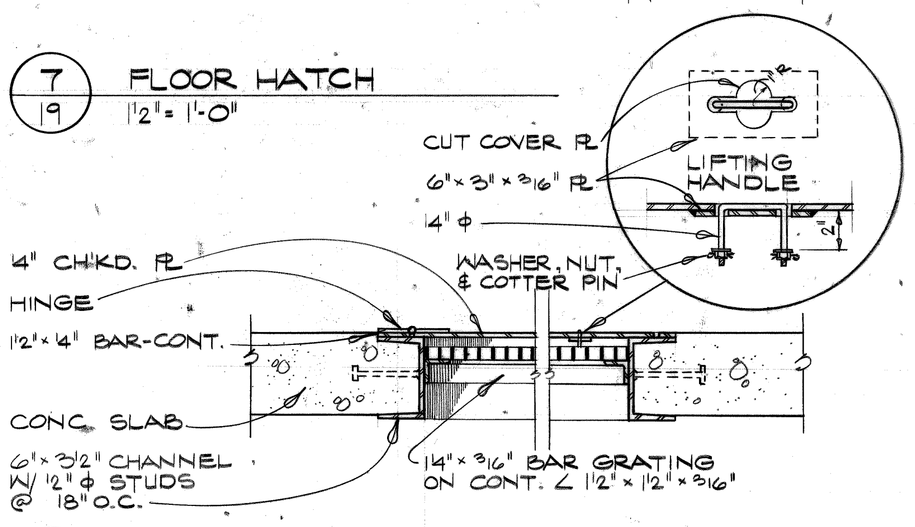

6/19 SMOKE RELIEF HATCH
1½" = 1'-0"

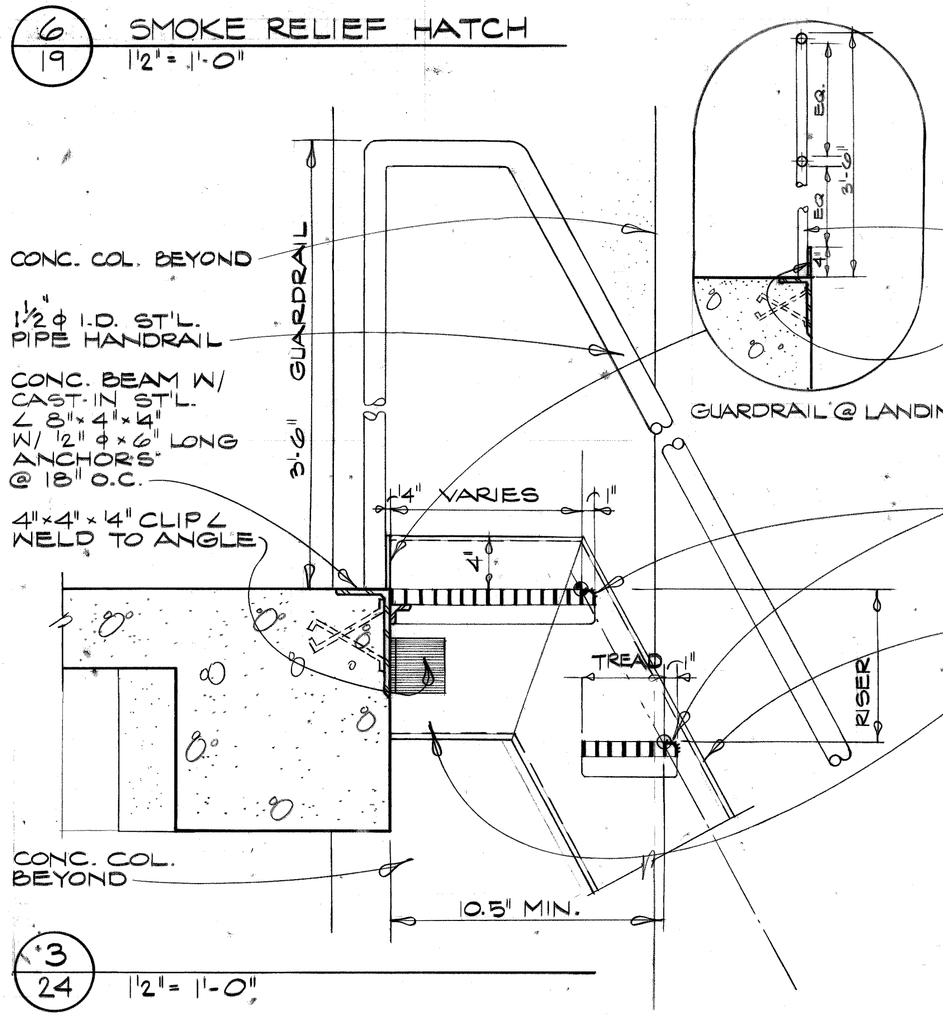

3/24
1½" = 1'-0"

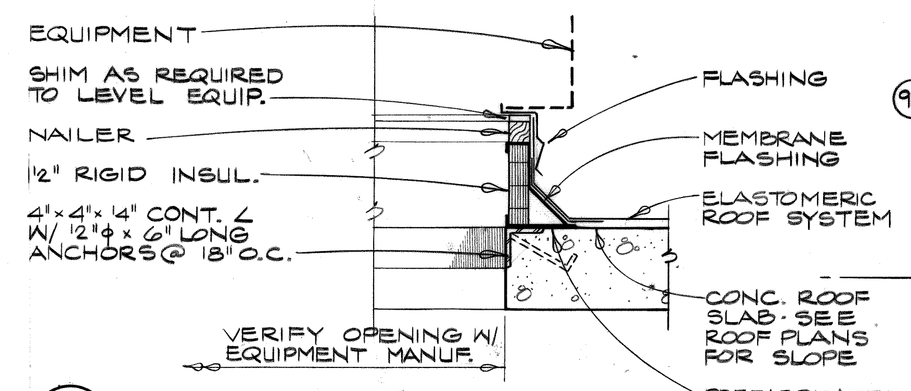

8/19 EQUIPMENT CURB
1½" = 1'-0"

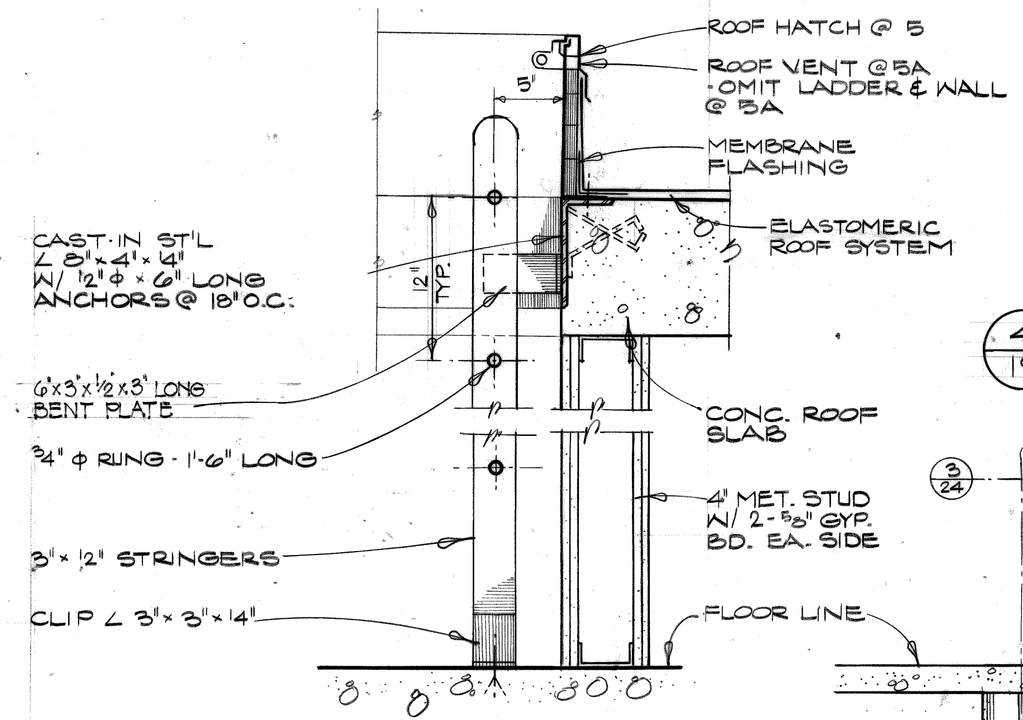

5/19,24 ACCESS LADDER AND ROOF HATCH
1½" = 1'-0"

5A/19,24 AS NOTED (ROOF VENT)
1½" = 1'-0"

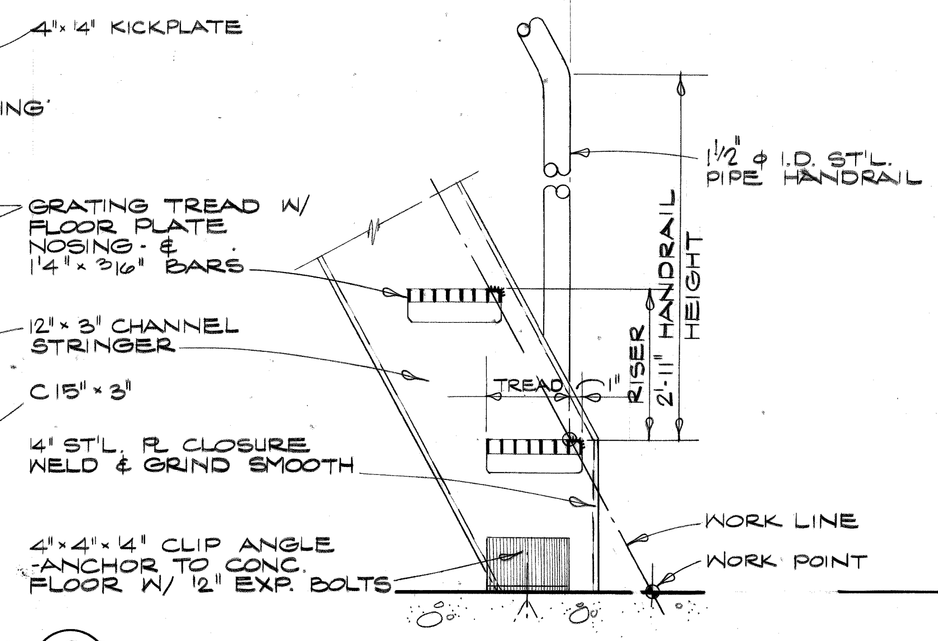

2/24
1½" = 1'-0"

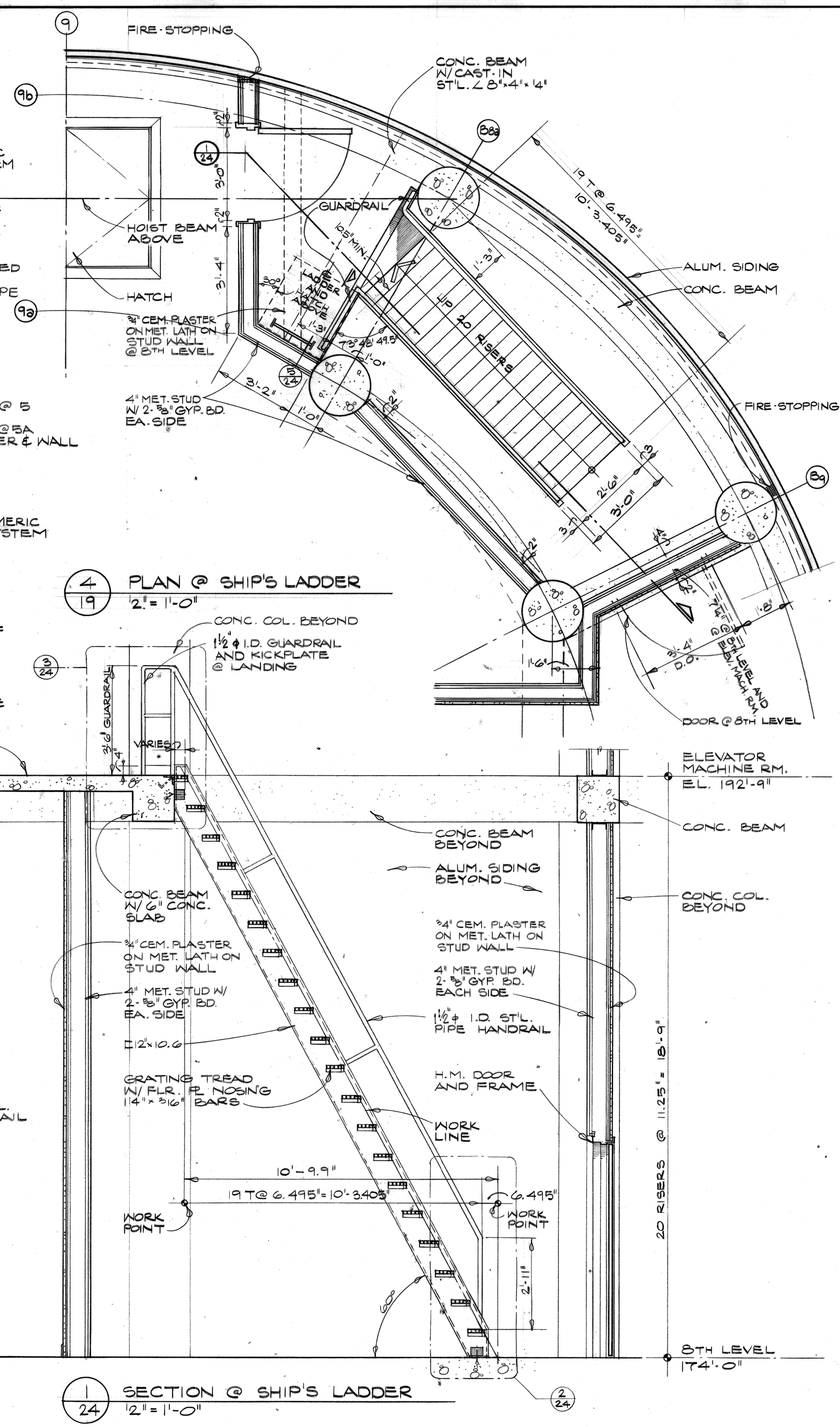

4/19 PLAN @ SHIP'S LADDER
2" = 1'-0"

1/24 SECTION @ SHIP'S LADDER
1½" = 1'-0"

Joe Louis Sports Arena
Pedestrian Walkway
For City Engineering Division

SH&G
Smith, Hinchman & Grylls Associates, Inc.
Architects Engineers Planners
455 West Fort Street
Detroit, Michigan 48226
(313)964-3000

SH&G Job. No. 11732C

OWNER	5-30-80
Issued For	Date
1-18-80	M.D.
Date	Drawn By
Div. Architect/Engineer	
Correlation Check	
Project Manager	
Construction Administrative Div. Approval	
Division Approval	

Key Plan

Detail Number / Location or Detail Sheet

N

Drawing Title
DETAILS RAMP AND STAIR-ELEVATOR TOWERS

15031A
Project No.

A-24
Drawing No.

AS NOTED
Scale

25 OF 076

9-26-79

MC/PRM# 71858

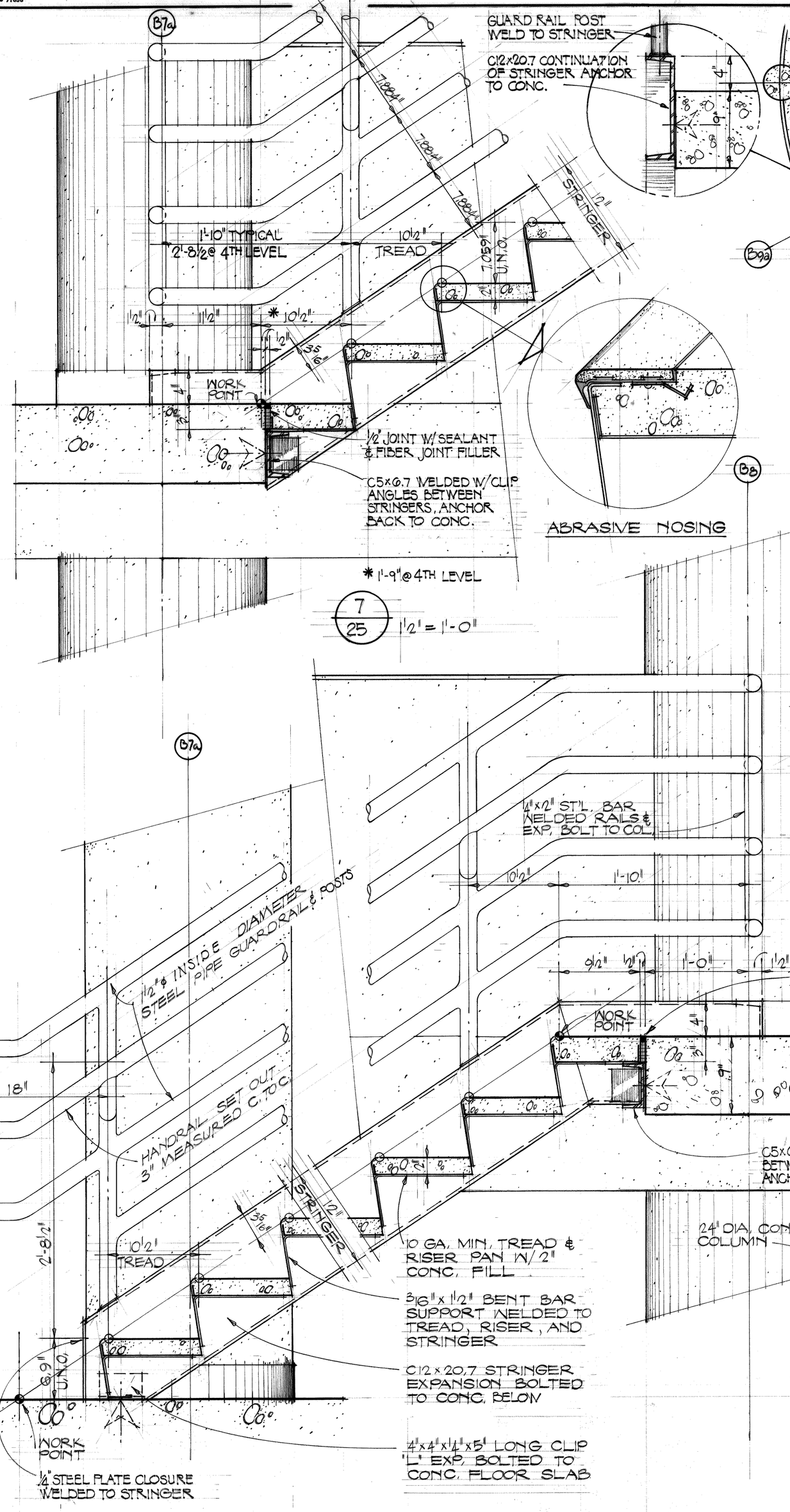

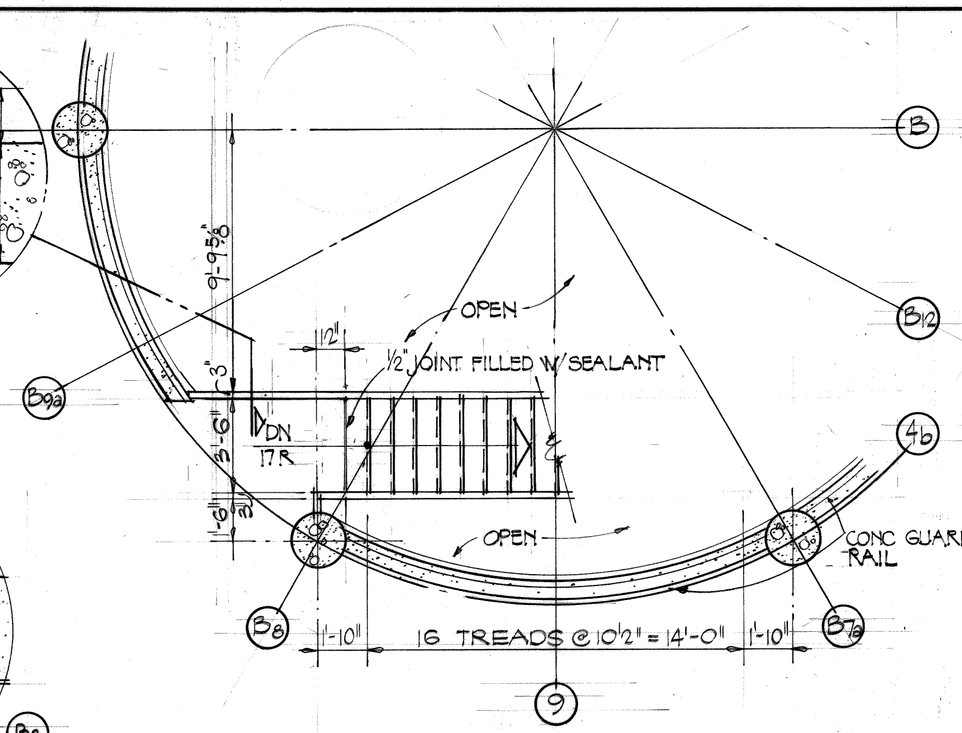

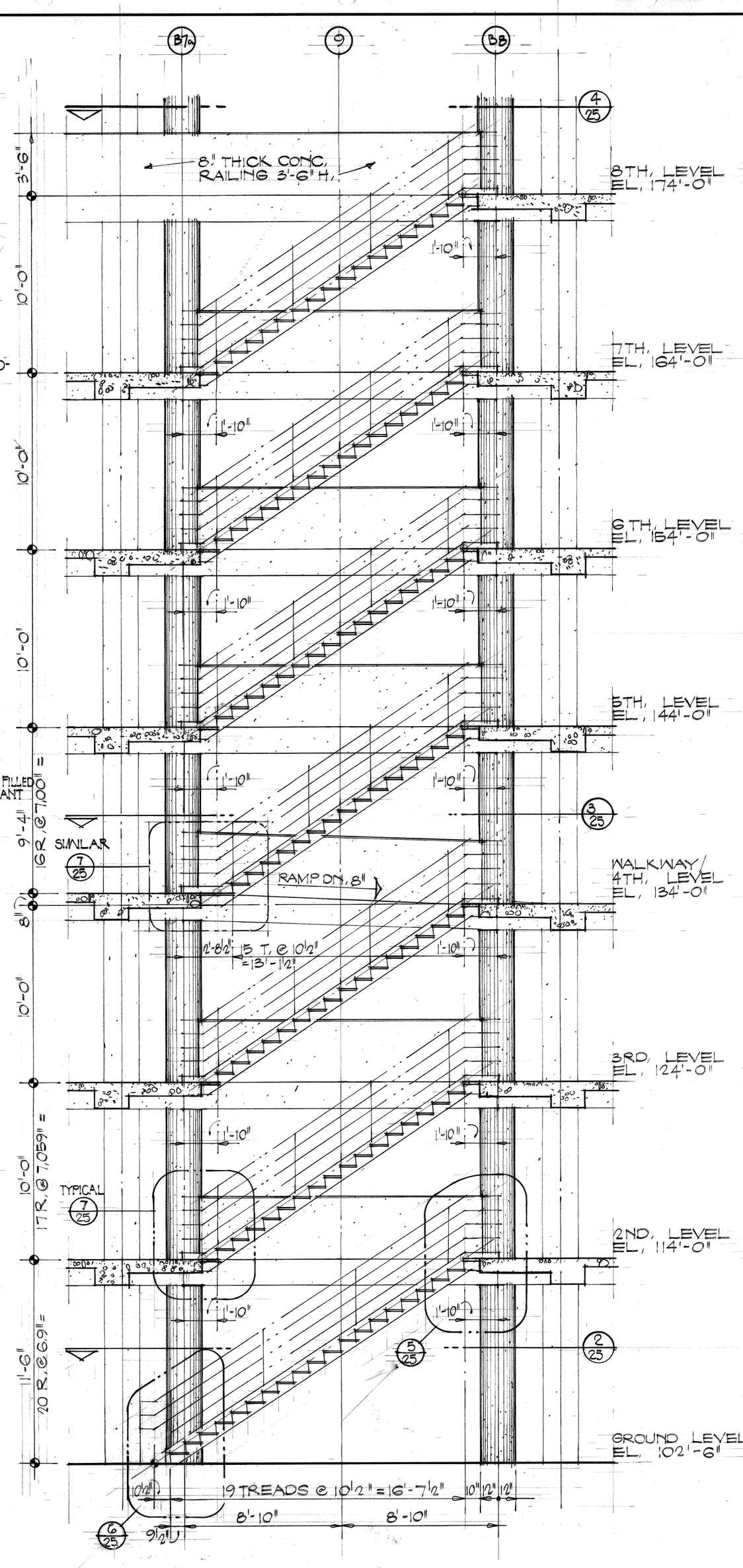

4/25 PLAN @ STAIR #1/EIGHTH LEVEL
1/4" = 1'-0"

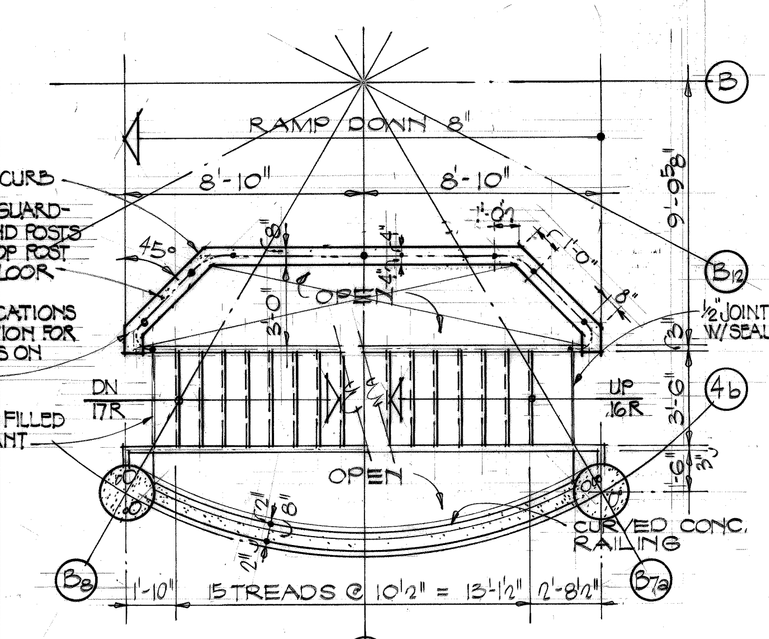

3/25 PLAN @ STAIR #1/WALKWAY LEVEL
1/4" = 1'-0"

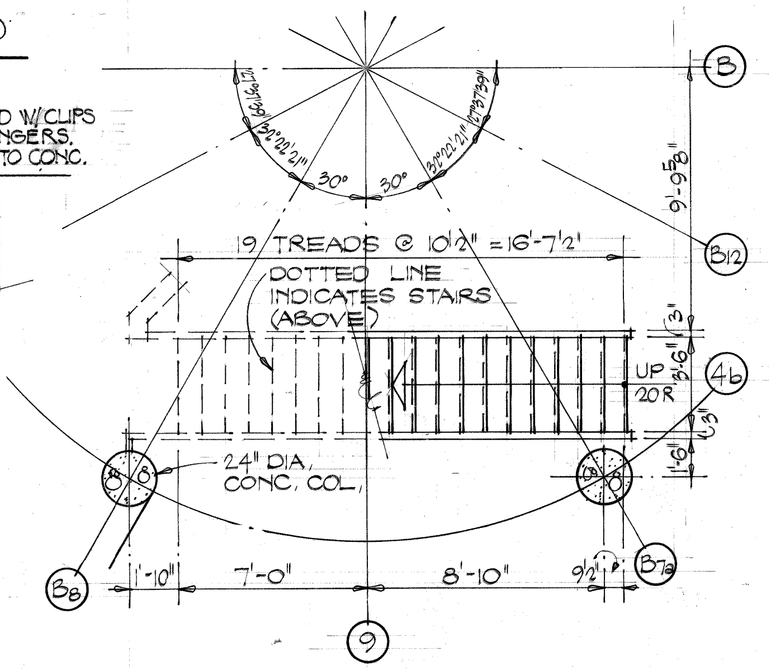

2/25 PLAN @ STAIR #1/GROUND LEVEL
1/4" = 1'-0"

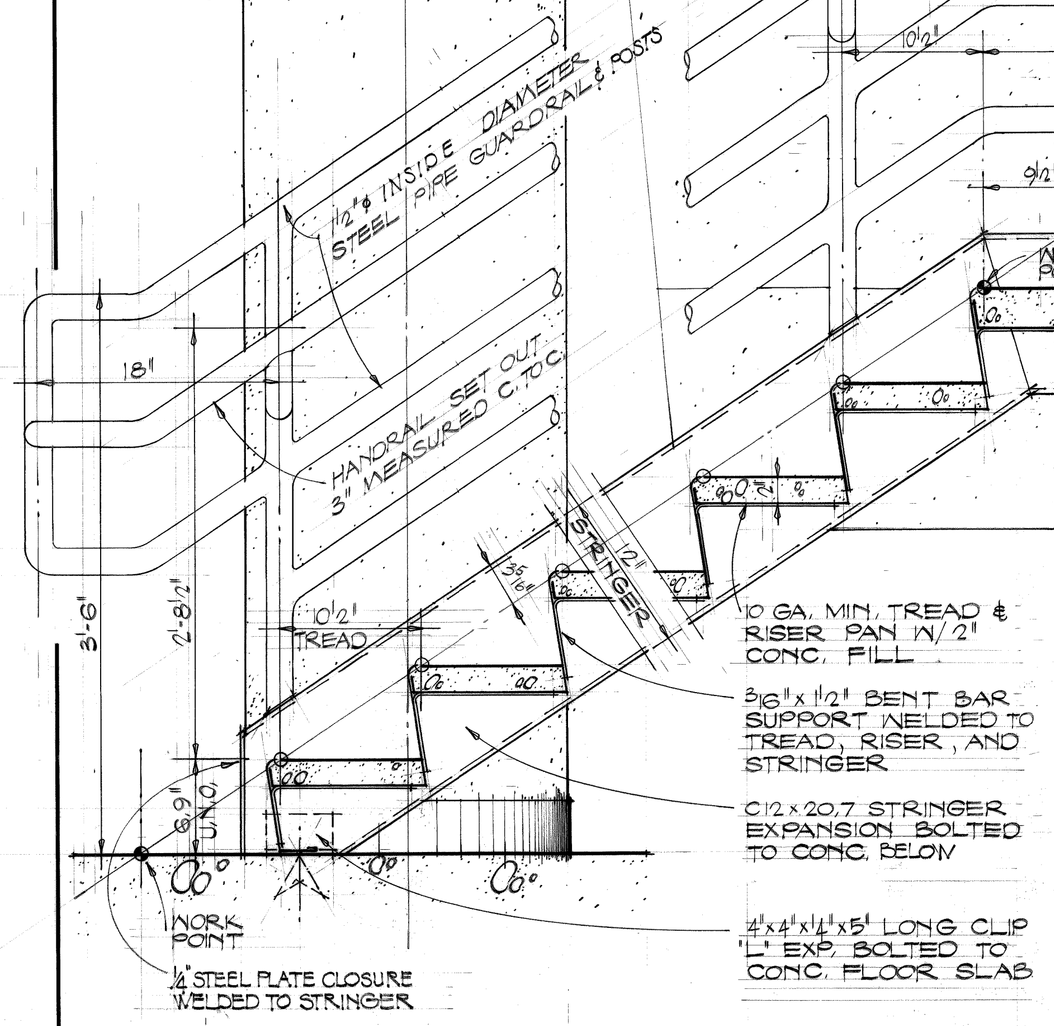

6/25 1½" = 1'-0"

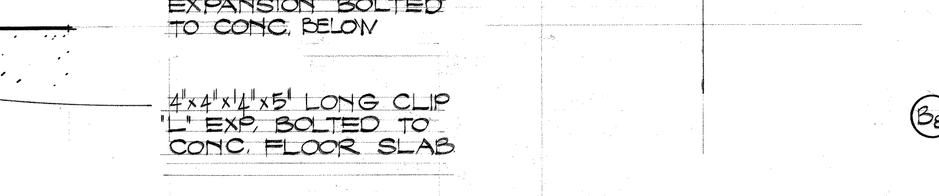

5/25 1½" = 1'-0"

1/18,19 SECTION THRU. STAIR #1
1/4" = 1'-0"

Joe Louis Sports Arena

Pedestrian Walkway

For City Engineering Division

SH&G
Smith, Hinchman & Grylls Associates, Inc.
Architects Engineers Planners
455 West Fort Street
Detroit, Michigan 48226
(313)964-3000

SH&G Job. No. 11732C

OWNER Issued For — 5-30-80 Date

1-18-80 Date — C MC Drawn By

Div. Architect/Engineer

Correlation Check

Project Manager

Construction Administrative Div. Approval

Division Approval

Key Plan

DETAIL NUMBER / LOCATION OR DETAIL SHEET

N

Drawing Title
PLAN AND DETAILS STAIR 1

15031A Project No.

A-25 Drawing No.

AS NOTED Scale

26 OF 926

9-26-79

MC/PRM+ 71858

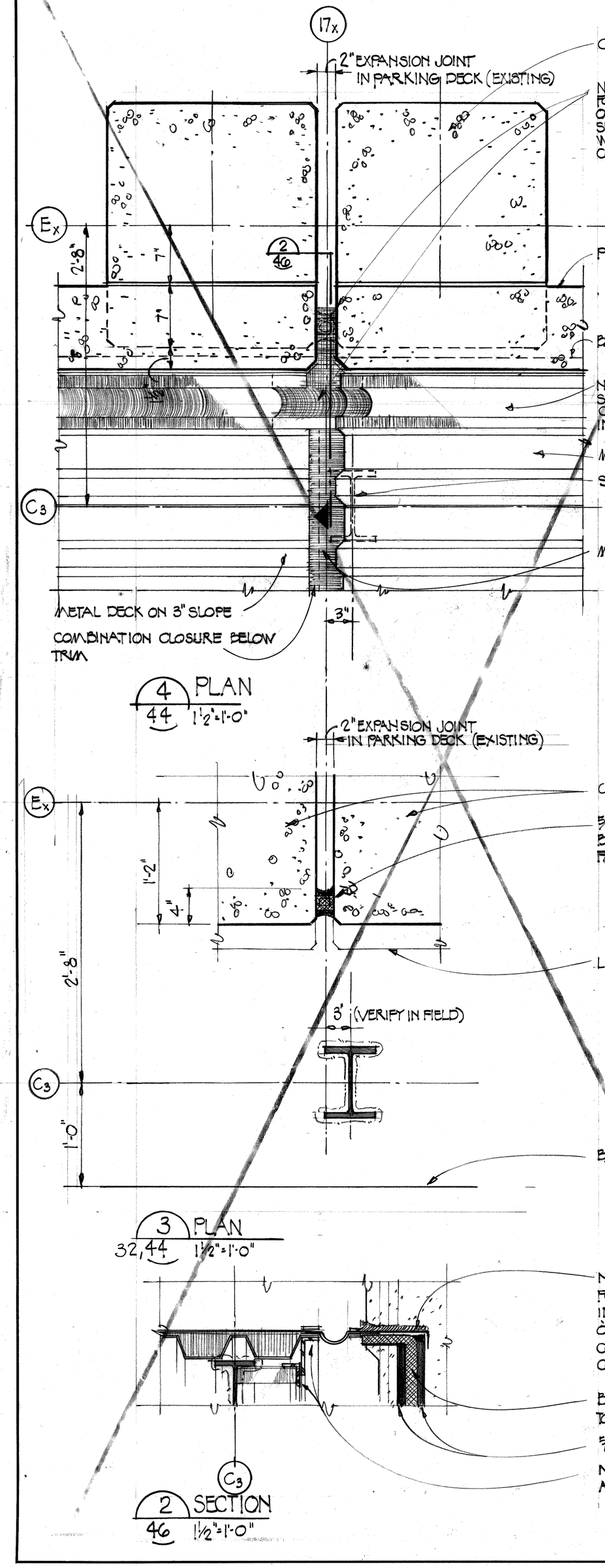

4/44 PLAN 1½"=1'-0"

3/32,44 PLAN 1½"=1'-0"

2/46 SECTION 1½"=1'-0"

N.I.C.

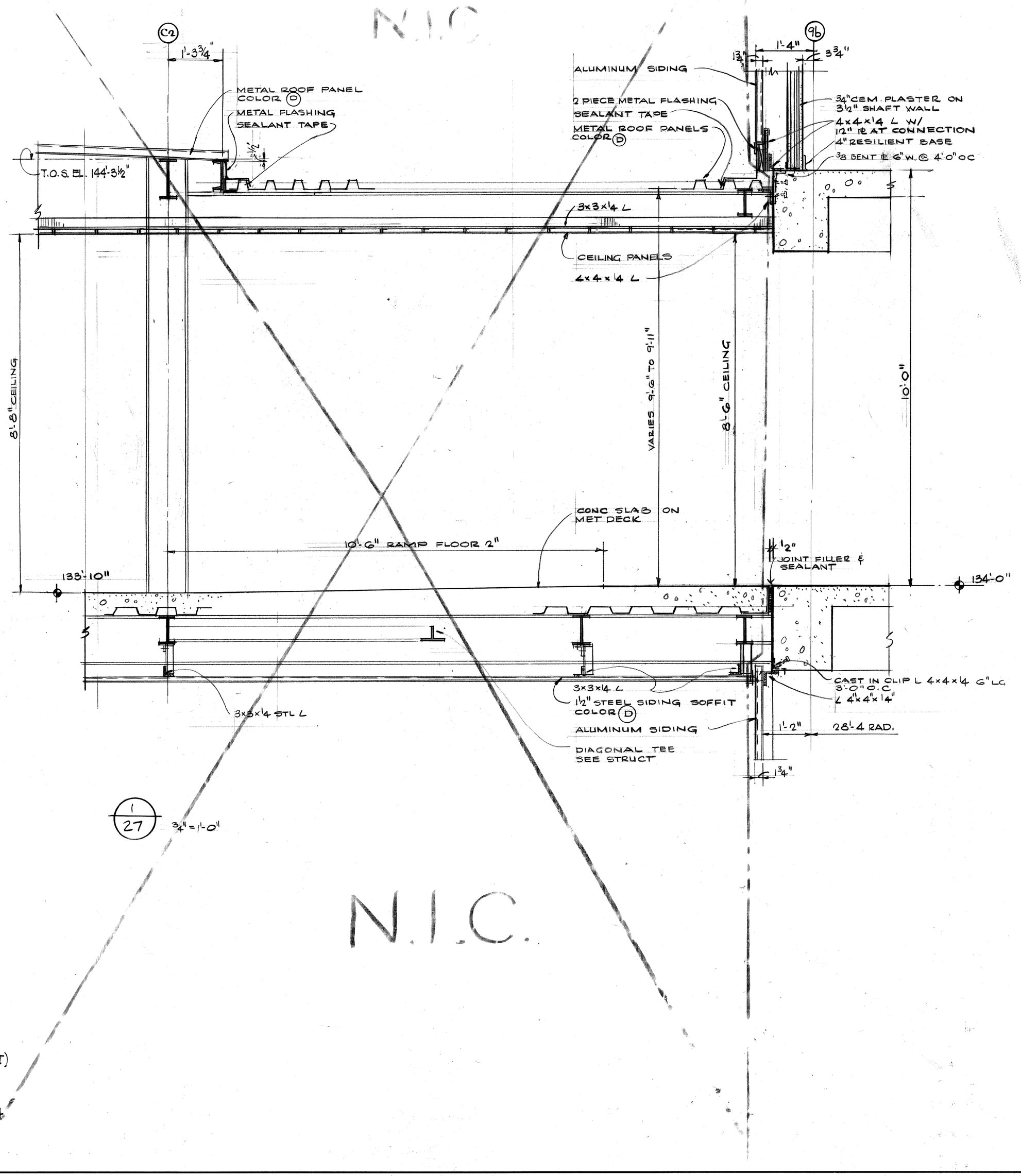

1/27 ¾"=1'-0"

N.I.C.

Joe Louis Sports Arena

Pedestrian Walkway

For City Engineering Division

SH&G
Smith, Hinchman & Grylls Associates, Inc.
Architects Engineers Planners
455 West Fort Street
Detroit, Michigan 48226
(313)964-3000

SH&G Job. No. 11732C

OWNER — Issued For — 5-30-80 — Date

1-18-80 — Date — D.A.W — Drawn By

Div. Architect/Engineer

Correlation Check

Project Manager

Construction Administrative Div. Approval

Division Approval

Key Plan

Detail Number / Location or Detail Sheet

N

Drawing Title
DETAILS PARKING DECK WALKWAY CONNECTION AT STAIR-ELEVATOR TOWER

15031A
Project No.

A-46
Drawing No.

3/4" = 1'-0"
Scale

27 of 96

9-26-79

MC/PRM+ 71858

DOOR NUMBER	DOOR TYPE	WIDTH (INCHES)	HEIGHT	UL LABEL	HARDWARE SET	DETAIL NUMBER	REMARKS
NORTH - SOUTH BRIDGE							
EAST - WEST BRIDGE							
104		84	7'-4"		1		PAIR, DOUBLE EGRESS SEE ELEV. & DET. SHT. 8A
RAMP TOWER							
108	A	72	7'-0"		2	1	PAIR
STAIR / ELEVATOR TOWER							
112	A	72	7'-0"		2	1	PAIR
113	B	36	7'-0"	B	3	6	
114	C	36	7'-0"	B	4		SEE SHT. 23 DET. 1, 4
115	C	36	7'-0"	B	4		SEE SHT. 23 DET. 2, 6
116	C	36	7'-0"	B	4		SEE SHT. 23 DET. 2, 6
117	C	36	7'-0"	B	4		SEE SHT. 23 DET. 2, 6
118	C	36	7'-0"	B	4		SEE SHT. 23 DET. 2, 6
119	C	36	7'-0"	B	4		SEE SHT. 23 DET. 2, 6
120	C	36	7'-0"	B	4		SEE SHT. 23 DET. 2, 6
121	C	36	7'-0"	B	4		SEE SHT. 23 DET. 3, 9
122	B	36	7'-0"	C	3	4	
123	B	36	7'-0"	B	3	5	
PARKING DECK - WALKWAY							
126	D	96	8'-6"		5		PAIR, DOUBLE EGRESS SEE DET. 1, 2 SHT. 29
127	D	96	8'-6"	C	5		PAIR, DOUBLE EGRESS SEE DET. 1, 2 SHT. 29
128	D	96	8'-6"	C	5		PAIR, DOUBLE EGRESS SEE DET. 1, 2 SHT. 29
STAIR 2							
132	E	44	7'-0"		6	2	
133	C	36	7'-0"	B	7		SEE DET. 1, SHT. 45; DET. 1 SHT. 44
134	C	36	7'-0"	B	7		SEE DET. 1, SHT. 45; DET. 1 SHT. 44
135	C	36	7'-0"	B	7		SEE DET. 1, SHT. 45; DET. 1 SHT. 44
136	C	36	7'-0"	B	7		SEE DET. 1, SHT. 45; DET. 1 SHT. 44
137	C	36	7'-0"	B	7		SEE DET. 1, SHT. 45; DET. 1 SHT. 44
138	C	36	7'-0"	B	7		SEE DET. 1, SHT. 45; DET. 1 SHT. 44
139	C	36	7'-0"	B	7		SEE DET. 1, SHT. 45; DET. 1 SHT. 44
140	C	36	7'-0"	B	7		SEE DET. 1, SHT. 45; DET. 1 SHT. 44
141	C	36	7'-0"	B	7		SEE DET. 2, 3 SHT. 45
STAIR 3							
144	E	44	7'-0"		6	2	
145	C	36	7'-0"	B	7		SEE DET. 1 SHT. 45; DET. 1 SHT. 44
146	C	36	7'-0"	B	7		SEE DET. 1 SHT. 45; DET. 1 SHT. 44
147	C	36	7'-0"	B	7		SEE DET. 1 SHT. 45; DET. 1 SHT. 44
148	C	36	7'-0"	B	7		SEE DET. 1 SHT. 45; DET. 1 SHT. 44
149	C	36	7'-0"	B	7		SEE DET. 1 SHT. 45; DET. 1 SHT. 44
150	C	36	7'-0"	B	7		SEE DET. 1 SHT. 45; DET. 1 SHT. 44
151	C	36	7'-0"	B	7		SEE DET. 1 SHT. 45; DET. 1 SHT. 44
152	C	36	7'-0"	B	7		SEE DET. 2, 3 SHT. 45
STAIR 4							
155	E	44	7'-0"		6	3	
156	C	36	7'-0"	B	7		SEE DET. 1 SHT. 45; DET. 1 SHT. 44
157	C	36	7'-0"	B	7		SEE DET. 1 SHT. 45; DET. 1 SHT. 44
158	C	36	7'-0"	B	7		SEE DET. 1 SHT. 45; DET. 1 SHT. 44
159	C	36	7'-0"	B	7		SEE DET. 1 SHT. 45; DET. 1 SHT. 44
160	C	36	6'-8"	B	7		SEE DET. 1 SHT. 45; DET. 1 SHT. 44
161	C	36	7'-0"	B	7		SEE DET. 1 SHT. 45; DET. 1 SHT. 44
162	C	36	7'-0"	B	7		SEE DET. 1 SHT. 45; DET. 1 SHT. 44
163	C	36	7'-0"	B	7		SEE DET. 2, 3 SHT. 45

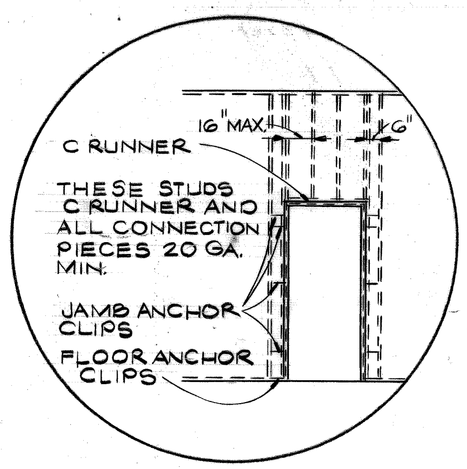

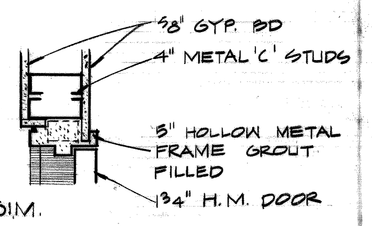

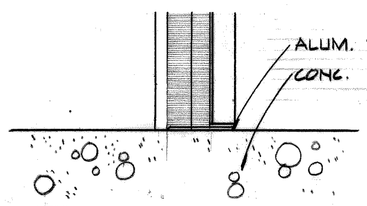

6 / 47 DOOR TYPE "B" DOOR NO. 122

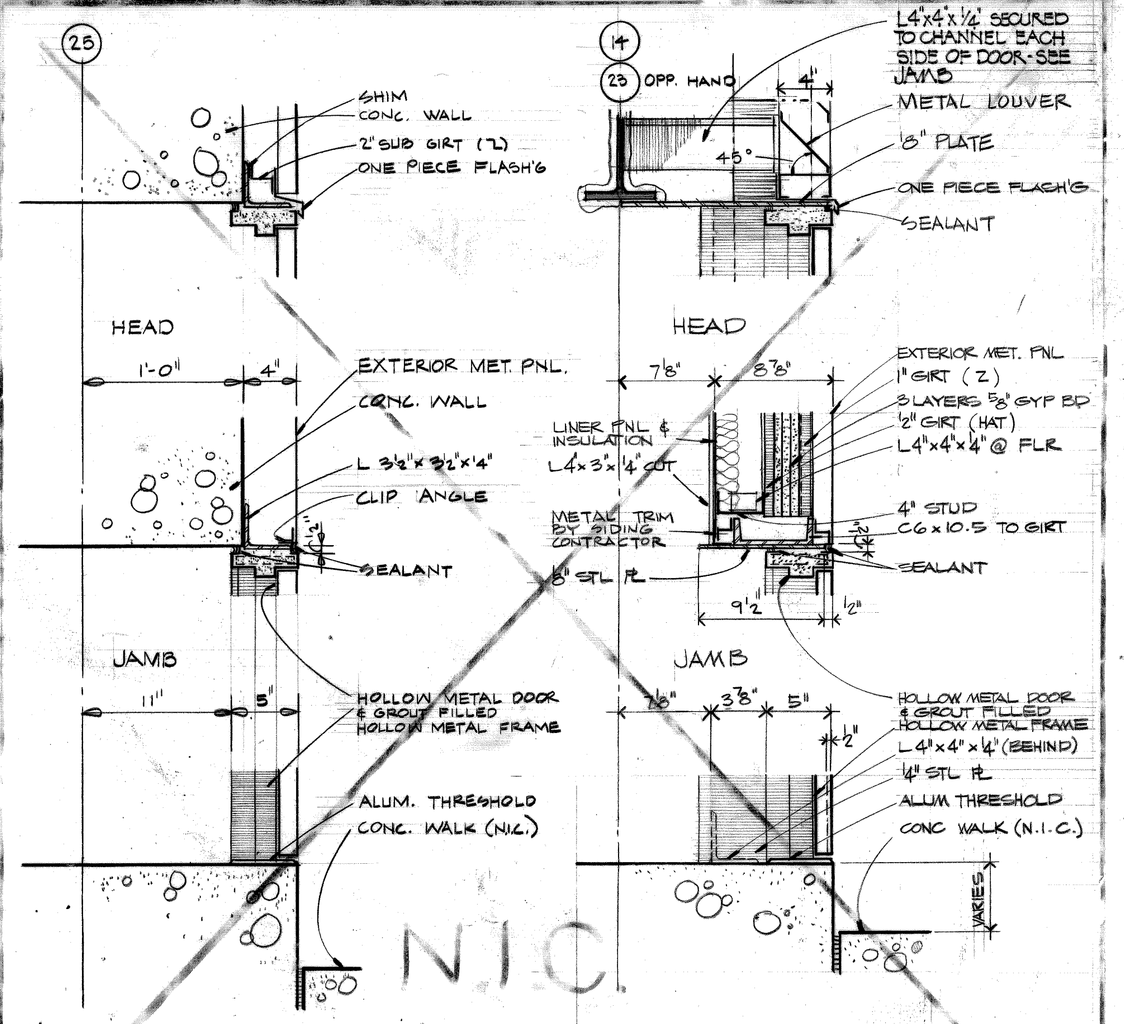

4 / 47 DOOR TYPE "E" STAIR 4

2 / 47 DOOR TYPE "E" STAIR 2 & 3

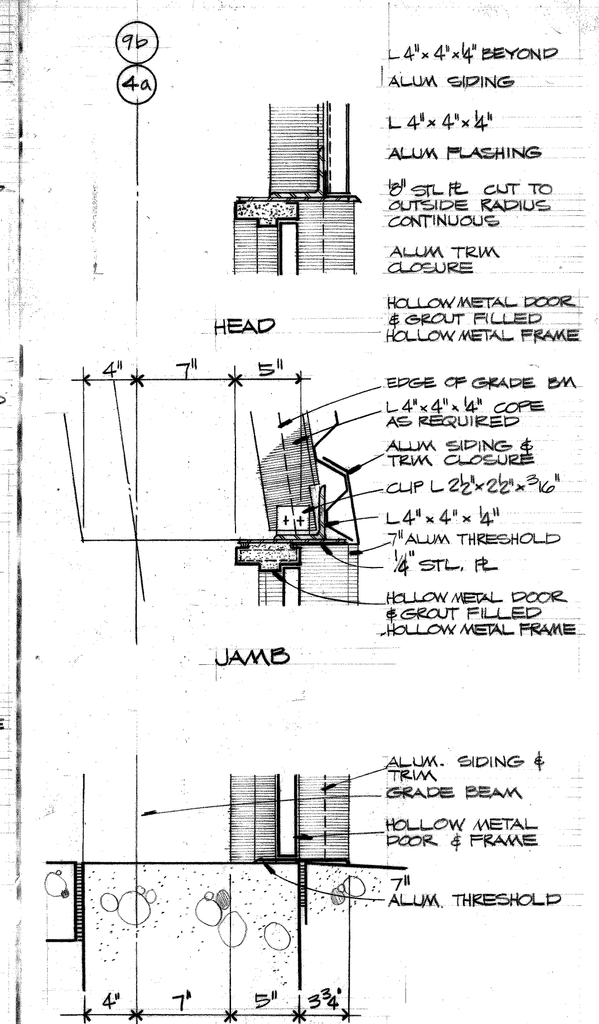

1 / 47 DOOR TYPE "A" RAMP TOWER & STAIR TOWER

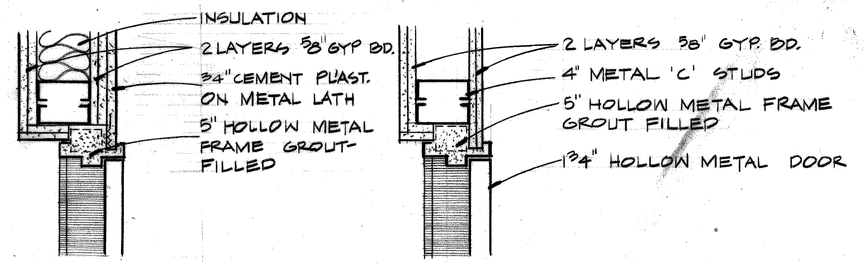

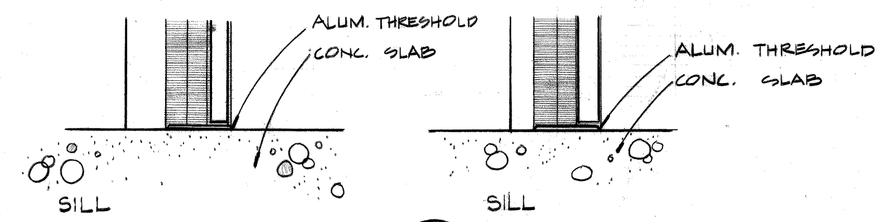

5 / 47 DOOR TYPE "B" DOOR NO. 113

3 / 47 DOOR TYPE "B" DOOR NO. 123

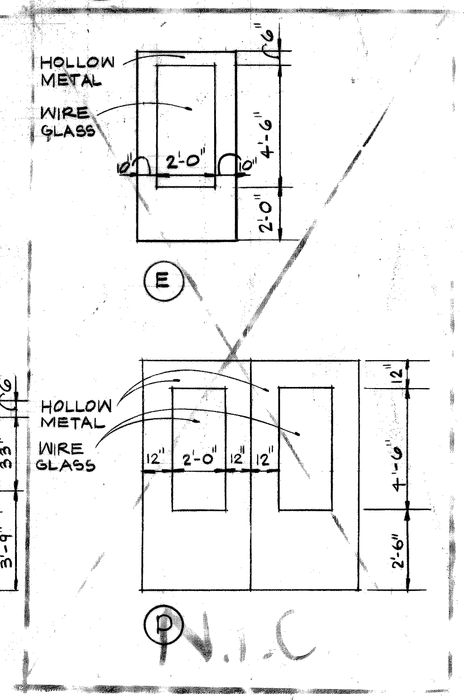

DOOR TYPES

SCALE 1/4" = 1'-0"

GENERAL NOTES

1. FOR PERTINENT HEAD AND JAMB DETAIL SIZE REFER TO ADJOINING DETAIL REFERENCE AND CORRESPONDING DETAIL SHEET NO.
2. ALL DOORS SHALL BE 1 3/4" THICK AND 7'-0" HIGH UNLESS OTHERWISE INDICATED.
3. ALL HOLLOW METAL FRAMES SHALL BE FULLY GROUTED.
4. ALL HOLLOW METAL FRAMES SHALL BE FIELD FINISH PAINTED UNLESS OTHERWISE INDICATED.
5. ALL DOOR JAMB ANCHORS SHALL BE VERIFIED WITH PLAN CONDITION AND SPECIFICATION.
6. WIREGLASS 1/4" THICK SHALL BE PROVIDED FOR GLAZED OPENINGS FOR "B" AND "C" LABEL DOORS, ALL WALKWAY LEVEL DOORS AND BORROWED LIGHTS.
7. ABRASIVE COATED KNOBS SHALL BE PROVIDED FOR ALL DOORS IN STAIR TOWERS TO ELEC./MECH. ROOMS AND STAIR PENTHOUSES.

Joe Louis Sports Arena

Pedestrian Walkway

For City Engineering Division

SH&G
Smith, Hinchman & Grylls Associates, Inc.
Architects Engineers Planners
455 West Fort Street
Detroit, Michigan 48226
(313)964-3000

SH&G Job. No. 11732C

OWNER	5-30-80
Issued For	Date
1-18-80	K.R.
Date	Drawn By
Div. Architect/Engineer	
Correlation Check,	
Project Manager	
Construction Administrative Div. Approval	
Division Approval	

Key Plan

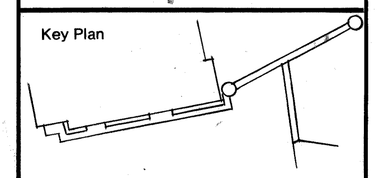

DETAIL NUMBER / LOCATION OF DETAIL SHEET

N

Drawing Title
DOOR SCHEDULE AND DETAILS

15031A
Project No.

A-47
Drawing No.

1'-2" = 1'-0" EXCEPT AS NOTED
Scale

28 OF 96

9-26-79

MC/Print 71B8

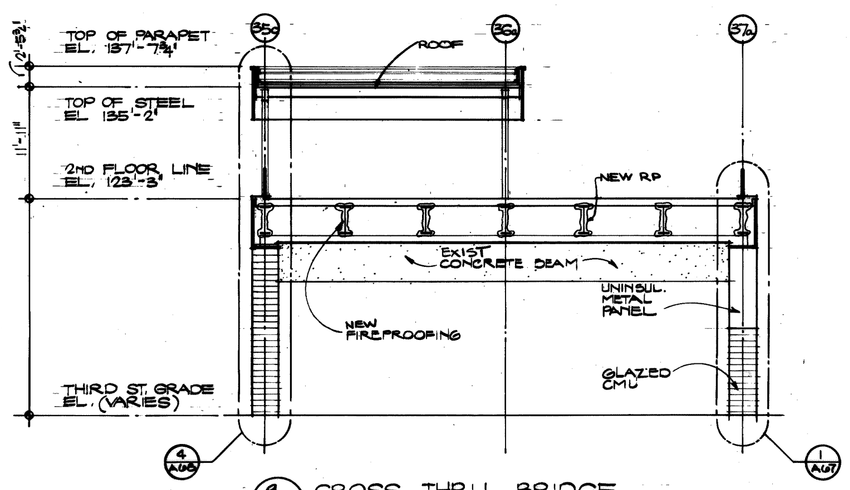

9 A-65 CROSS THRU BRIDGE
AM-1884 A-65

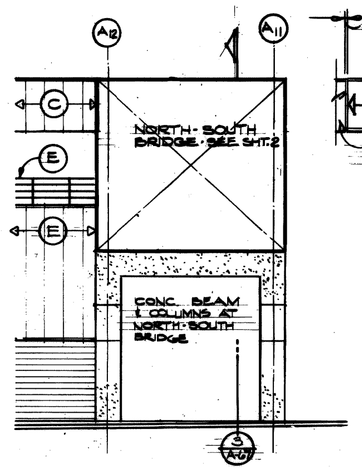

6 A-65

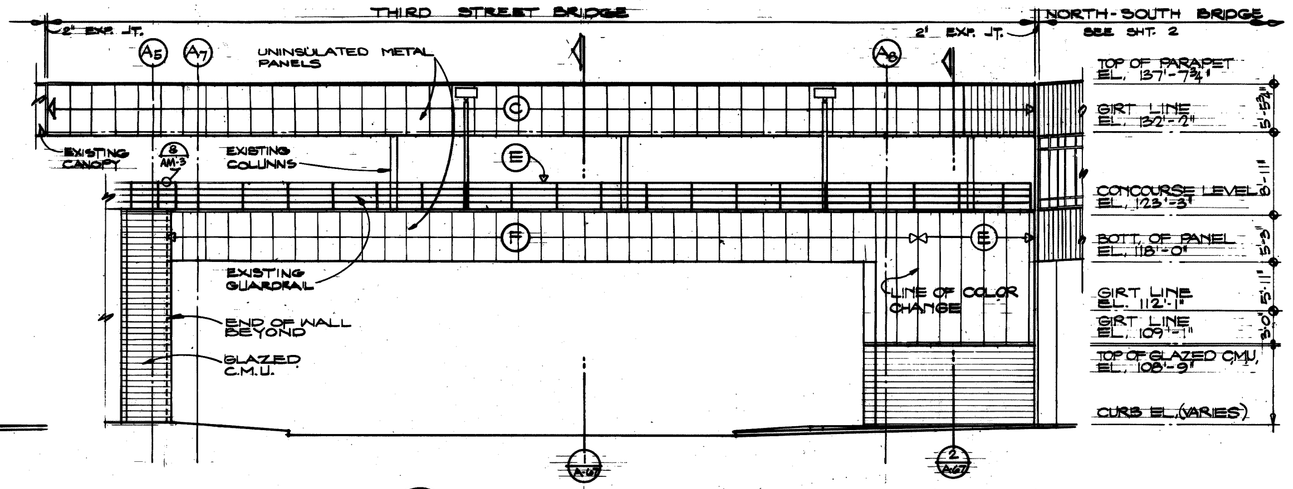

7 A-65 PARTIAL NORTH ELEVATION

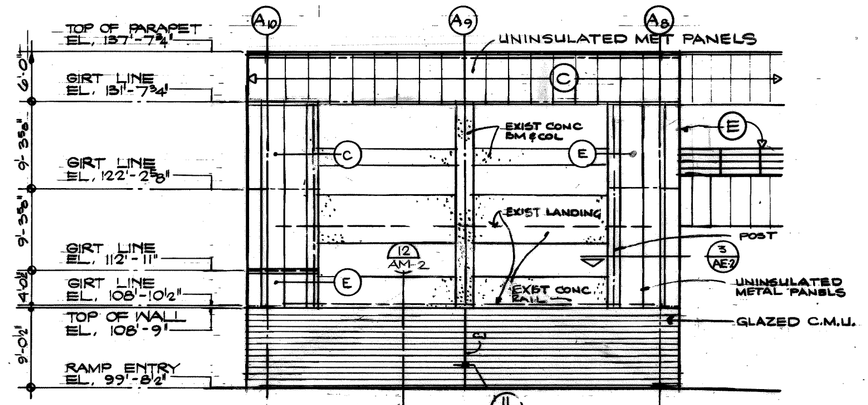

6 A-65 PROPOSED SOUTH ELEVATION

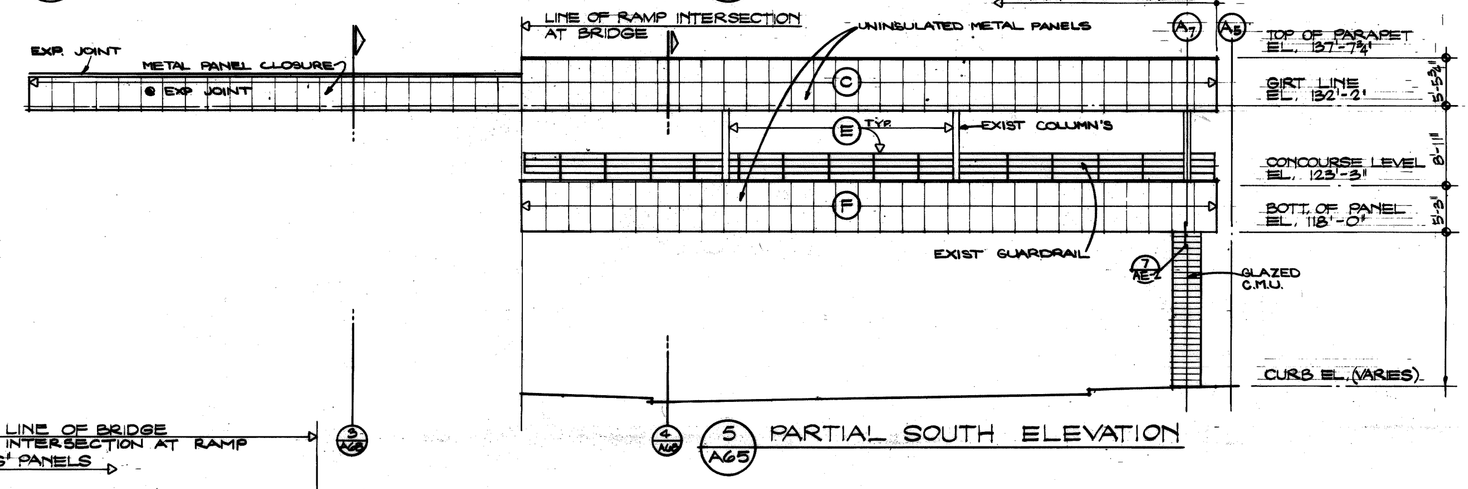

5 A-65 PARTIAL SOUTH ELEVATION

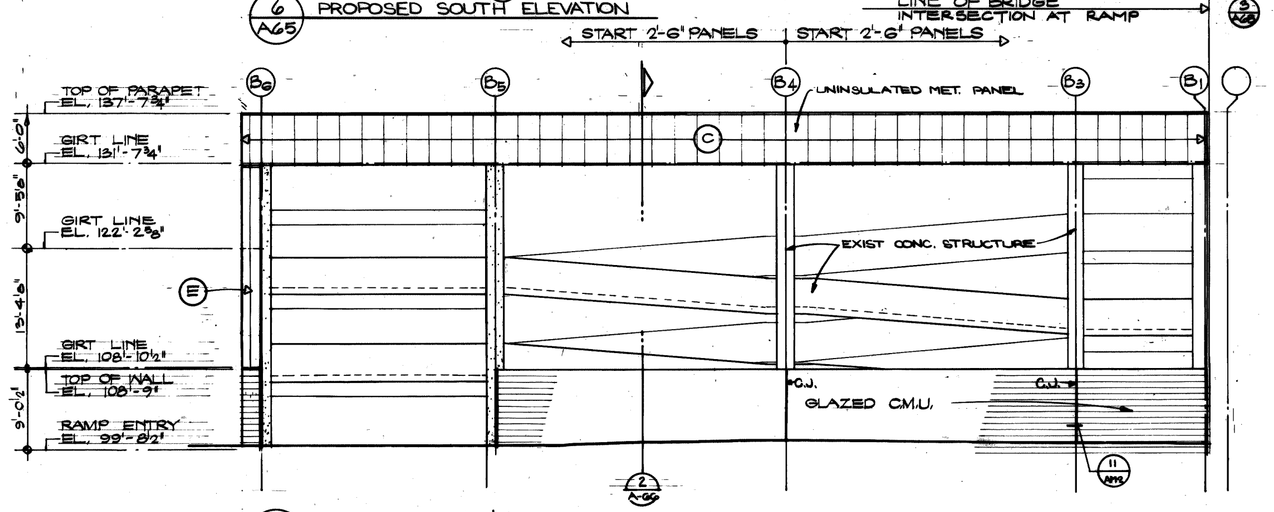

4 A-65 EAST ELEVATION

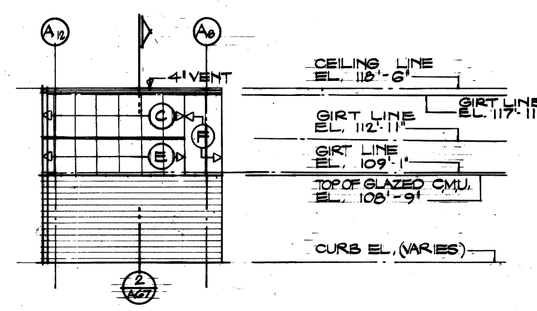

2 A-65

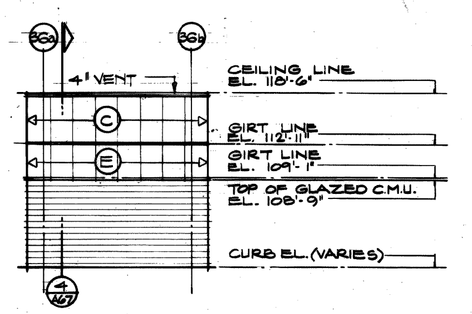

4 A-65

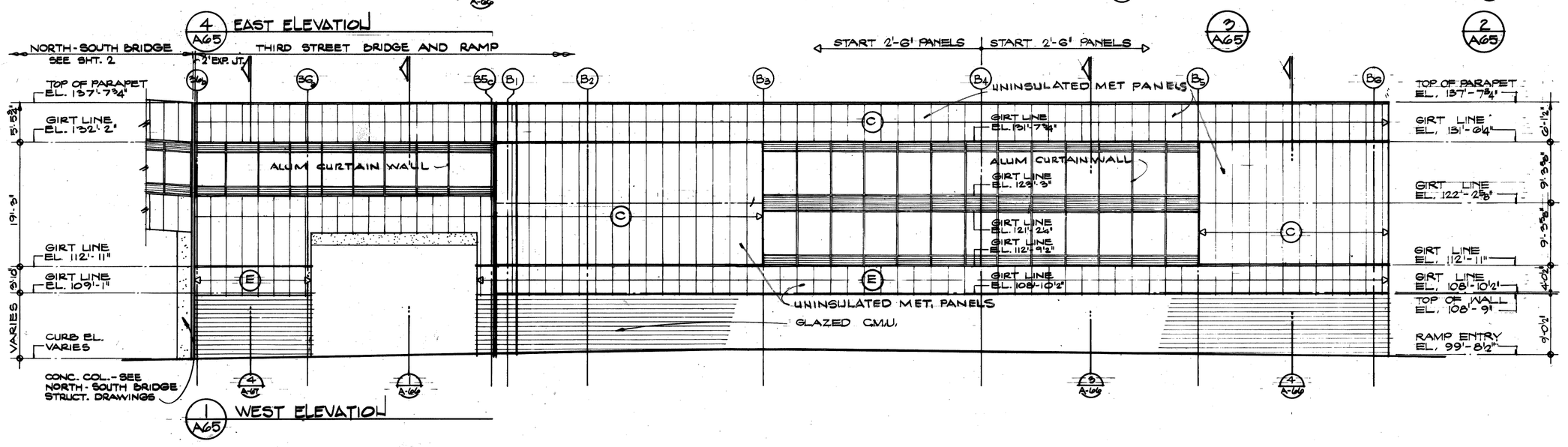

1 A-65 WEST ELEVATION

2 A-65

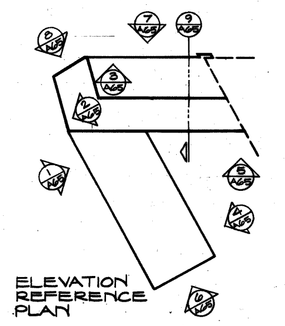

LEGEND	
CODE.	MATCH PPG PT. Nº
C	D 4752
E	N 7211
F	FLUROPON BY DE SOTO BLACK
GLAZED C.M.U.	GLAZED FACE CONC. MASONRY UNIT

Joe Louis Sports Arena

Pedestrian Walkway

For City Engineering Division

SH&G
Smith, Hinchman & Grylls Associates, Inc.
Architects Engineers Planners
455 West Fort Street
Detroit, Michigan 48226
(313)964-3000
SH&G Job. No. 11732C

OWNER — 5-30-80
Issued For — Date

10-2-79 — C.M.C.
Date — Drawn By

Div. Architect/Engineer
Correlation Check
Project Manager
Construction Administration Div. Approval
Division Approval

Key Plan

Detail Number / Location or Detail Sheet

N

Drawing Title
ARENA BRIDGE AND RAMP ELEVATIONS

15031A
Project No.
A-65
Drawing No.
1" = 12'-0"
Scale

9-26-79

GENERAL NOTE:
MAINTAIN ±1/4" ALLOWANCE FROM TRUE CENTERLINE OF COLUMN TO OUTSIDE FACE OF ALL STEEL.

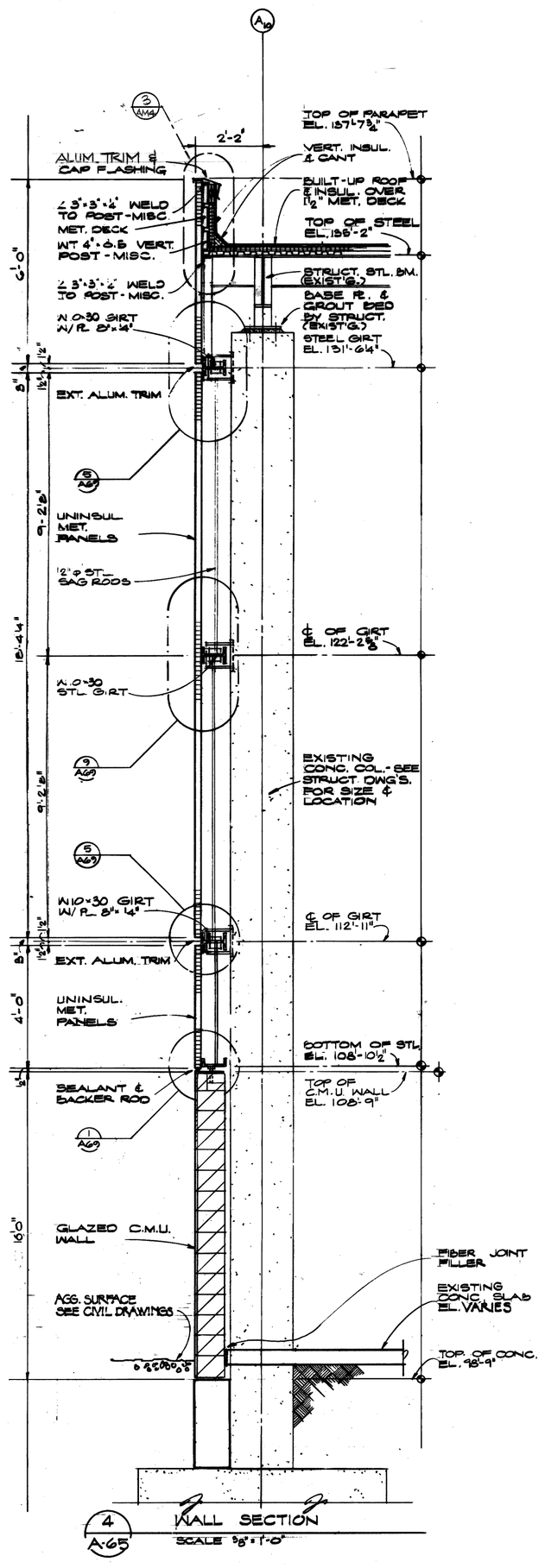

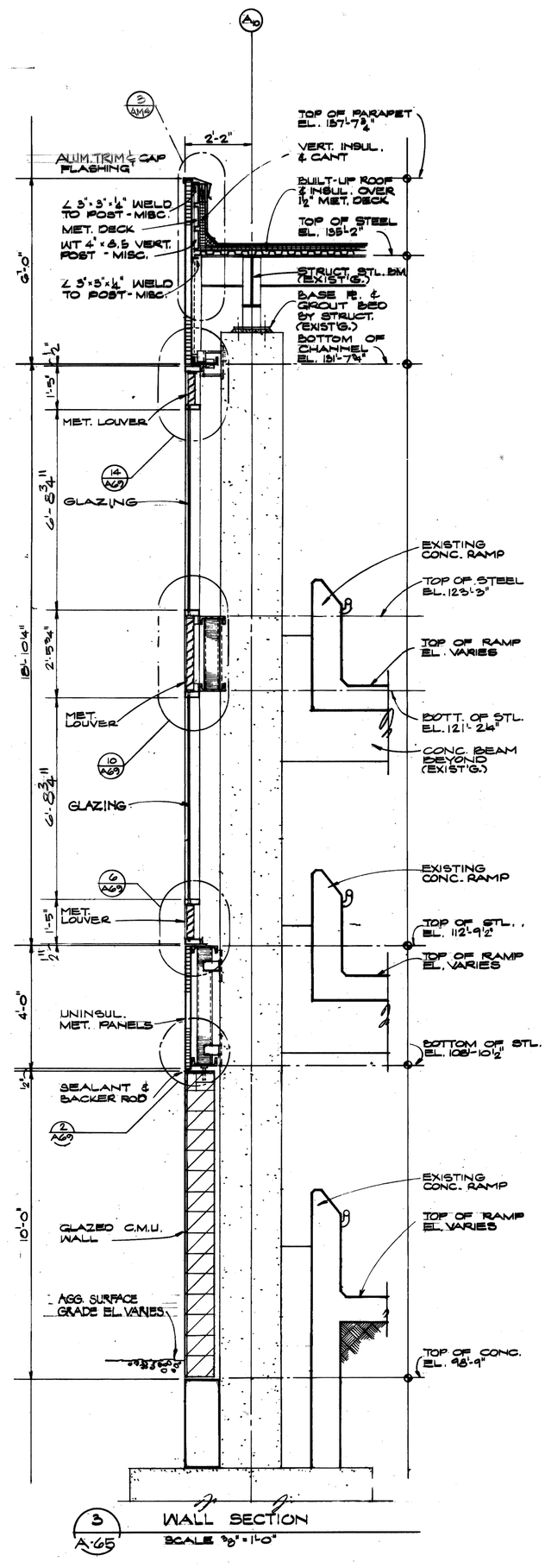

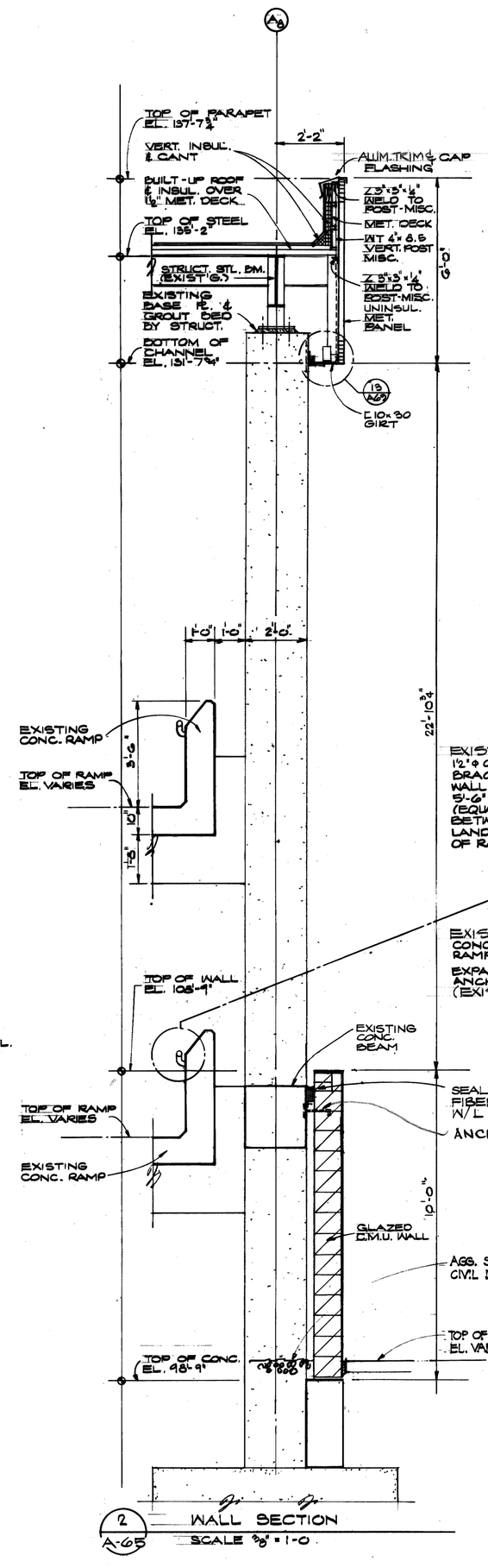

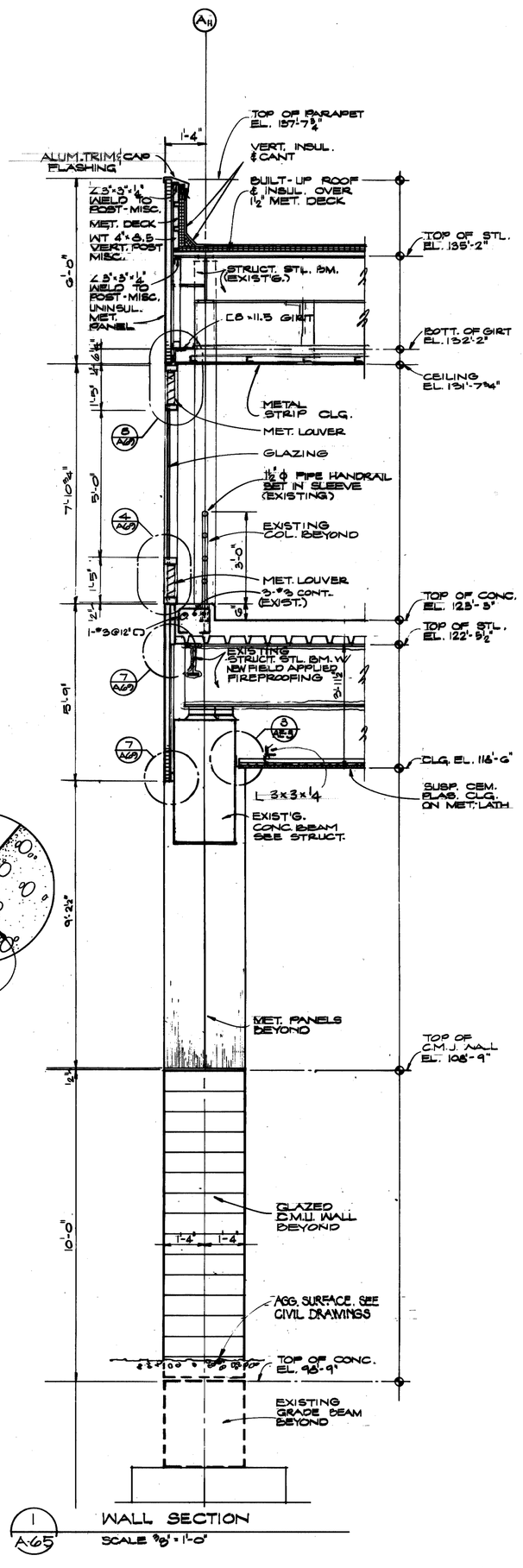

Joe Louis Sports Arena
Pedestrian Walkway
For City Engineering Division

SH&G
Smith, Hinchman & Grylls Associates, Inc.
Architects Engineers Planners
455 West Fort Street
Detroit, Michigan 48226
(313)964-3000

SH&G Job. No. 11732C

OWNER	5-30-80
Issued For	Date
10-2-79	M.D.-A-I-
Date	Drawn By
Div. Architect/Engineer	
Correlation Check	
Project Manager	
Construction Administration Approval	
Division Approval	

Key Plan

Detail Number / Location or Detail Sheet

N

Drawing Title
ARENA BRIDGE AND RAMP WALL SECTIONS

15031A
Project No.
A-66
Drawing No.
AS NOTED
Scale

30 OF 96

9-26-79

MC/Prints 71288

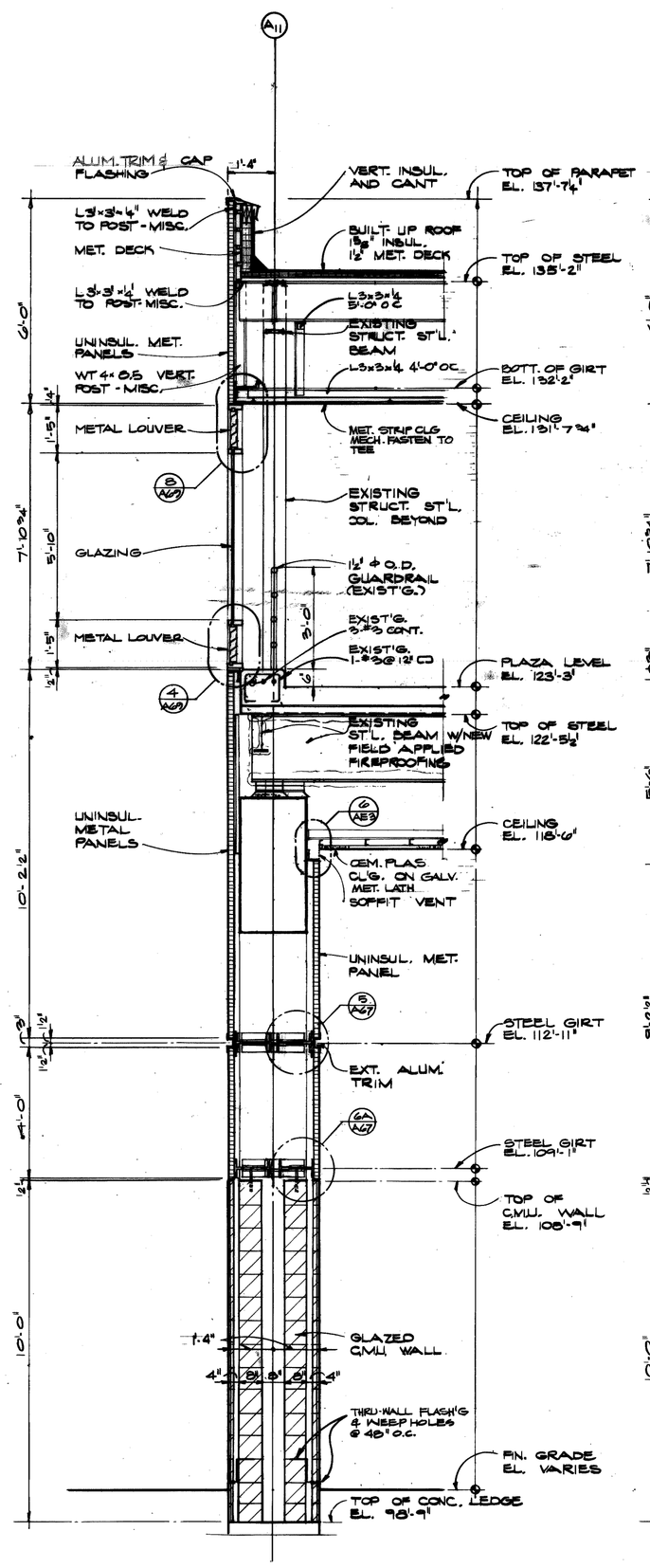

4 / A65 WALL SECTION
3/8" SCALE 3/8"=1'-0"

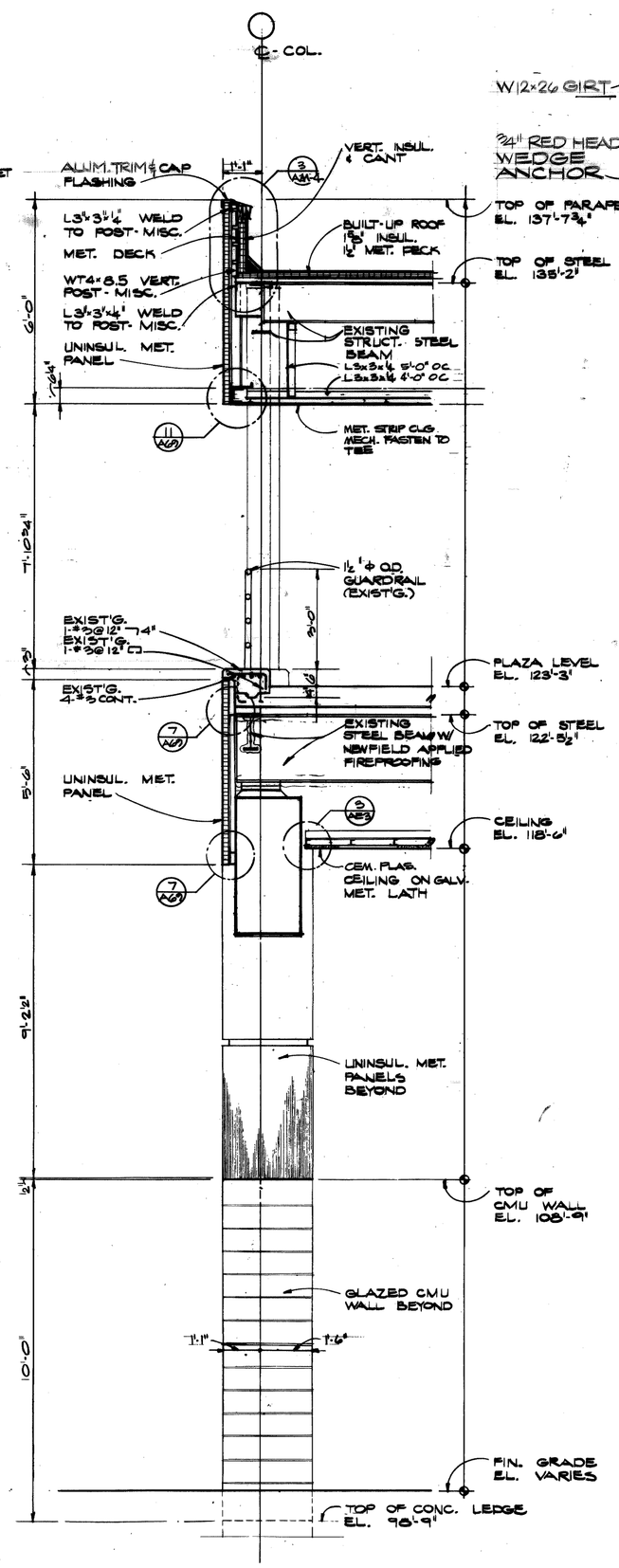

3 / A65 WALL SECTION
SCALE 3/8"=1'-0"

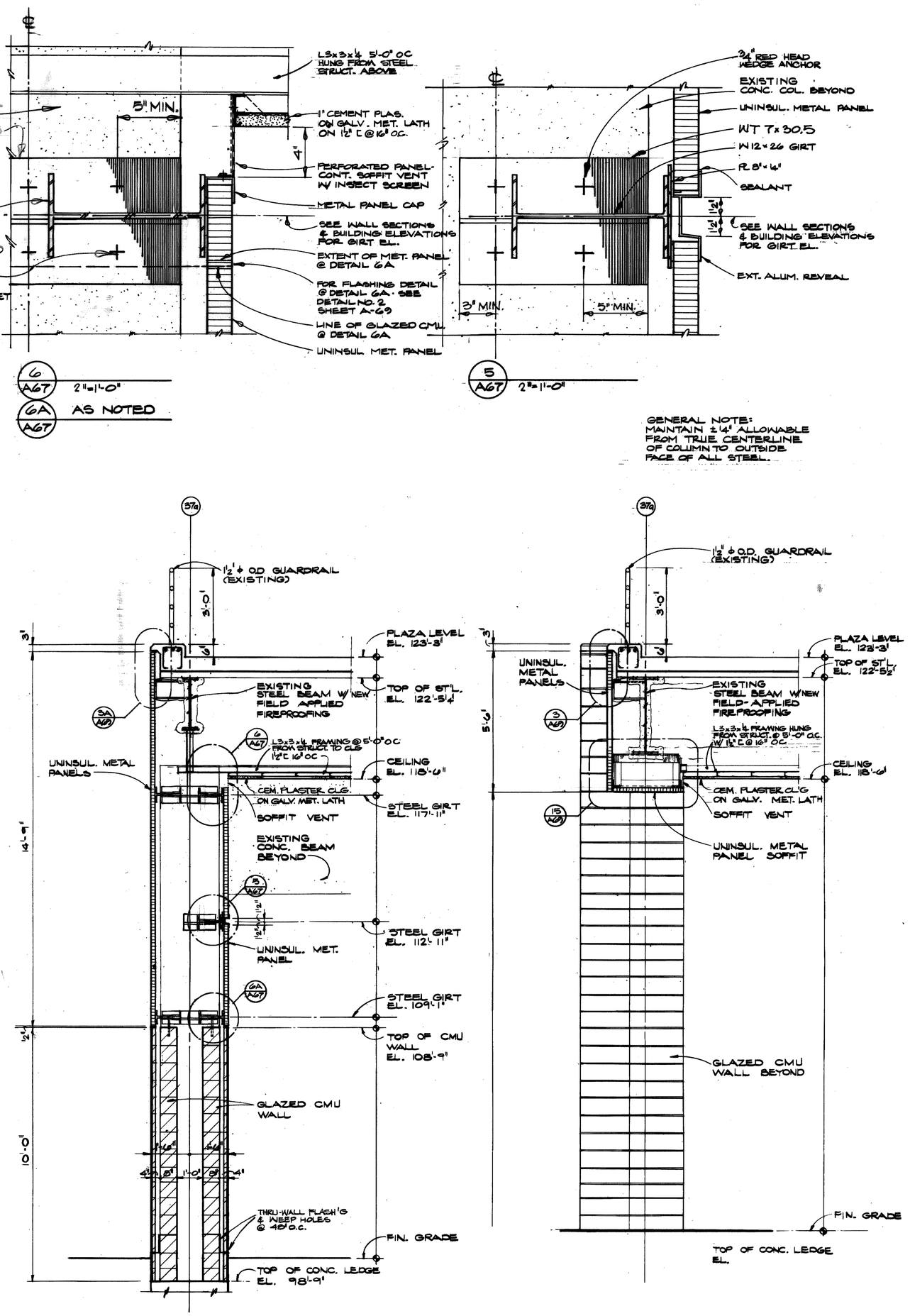

GENERAL NOTE:
MAINTAIN 2 1/4" ALLOWANCE FROM TRUE CENTERLINE OF COLUMN TO OUTSIDE FACE OF ALL STEEL.

2 / A65 WALL SECTION
SCALE 3/8"=1'-0"

1 / A65 WALL SECTION
SCALE 3/8"=1'-0"

Joe Louis Sports Arena
Pedestrian Walkway
For City Engineering Division

SH&G
Smith, Hinchman & Grylls Associates, Inc.
Architects Engineers Planners
455 West Fort Street
Detroit, Michigan 48226
(313)964-3000

SH&G Job. No. 11732C

OWNER — 5-30-80
Issued For — Date

10-2-79 — M.D.-A.I.
Date — Drawn By
Div. Architect/Engineer
Correlation Check
Project Manager
Construction Administration Div. Approval
Division Approval

Key Plan

Detail Number / Location or Detail Sheet

N

Drawing Title
ARENA BRIDGE AND RAMP WALL SECTIONS

15031A
Project No.
A-67
Drawing No.
AS NOTED
Scale

9-26-79

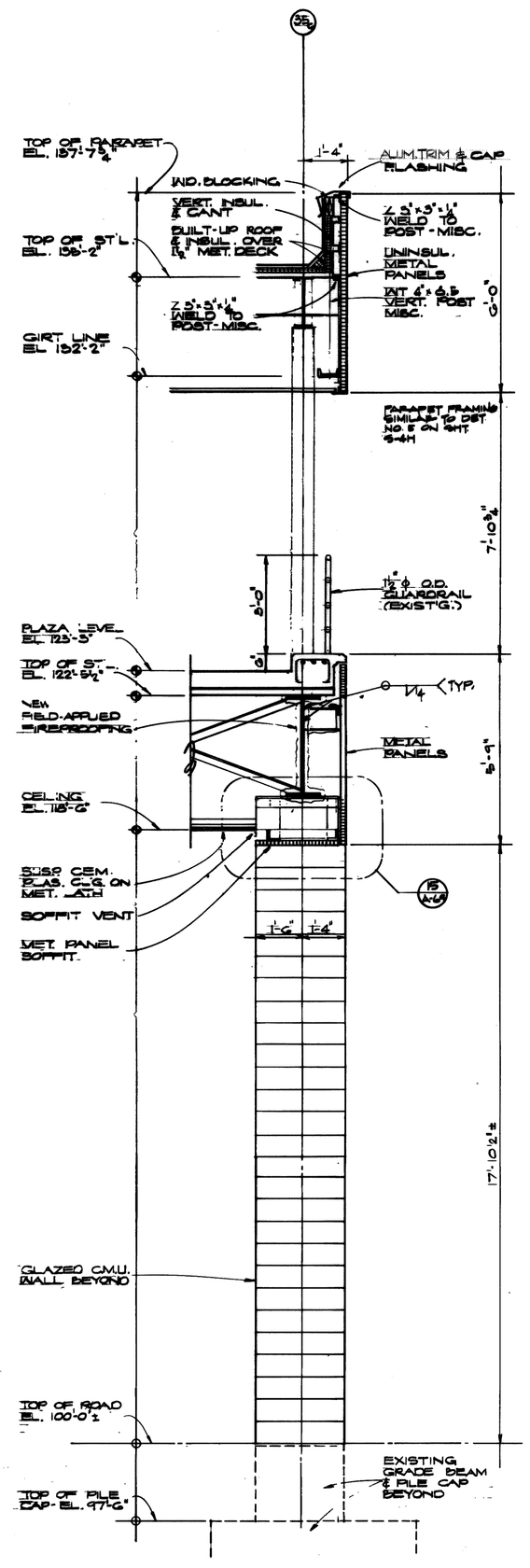

4 / A-G5 WALL SECTION
SCALE ⅜"=1'-0"

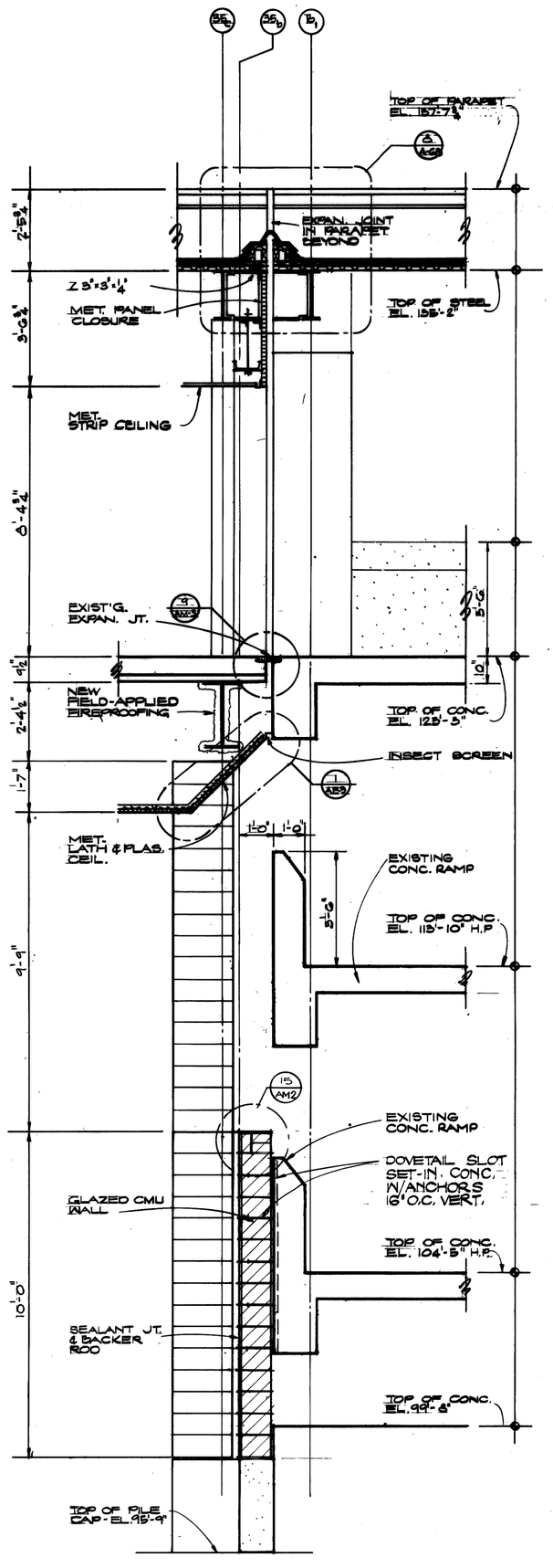

3 / A-G5 WALL SECTION
SCALE ⅜"=1'-0"

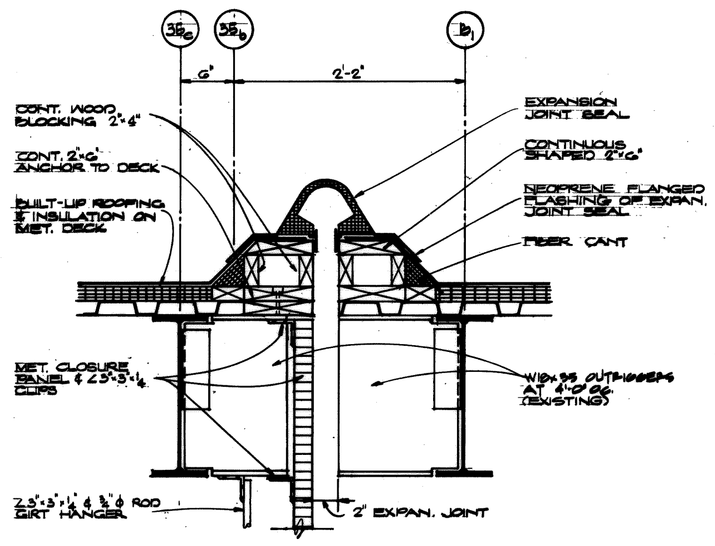

5 / AM-4 EXPAN. JOINT DETAIL
SCALE 1"=1'-0"

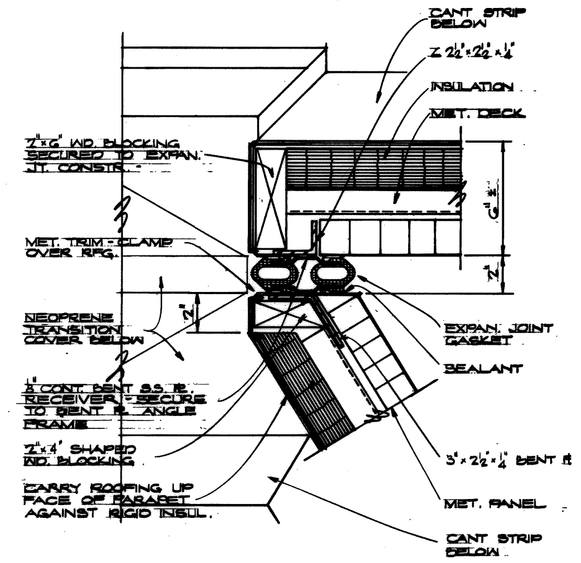

7 / AM-4 SECTION THRU PARAPET
SCALE 2"=1'-0"

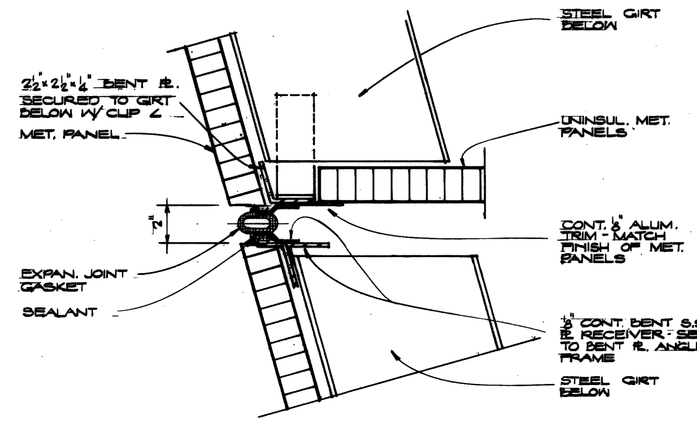

6 / AM-4 SECTION BELOW ROOF
SCALE 2"=1'-0"

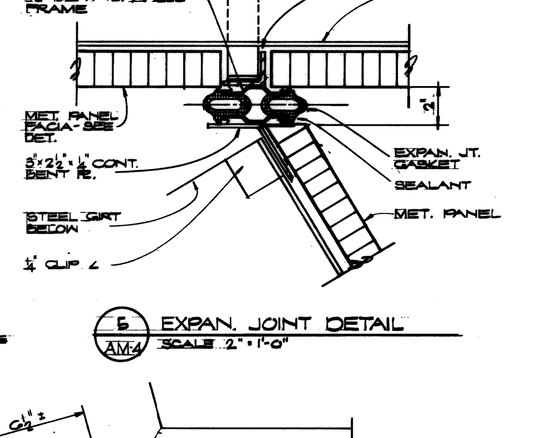

5 / AM-4 EXPAN. JOINT DETAIL
SCALE 2"=1'-0"

GENERAL NOTE:
MAINTAIN ½" ALLOWANCE FROM TRUE CENTER LINE OF COLUMN TO OUTSIDE FACE OF ALL STEEL

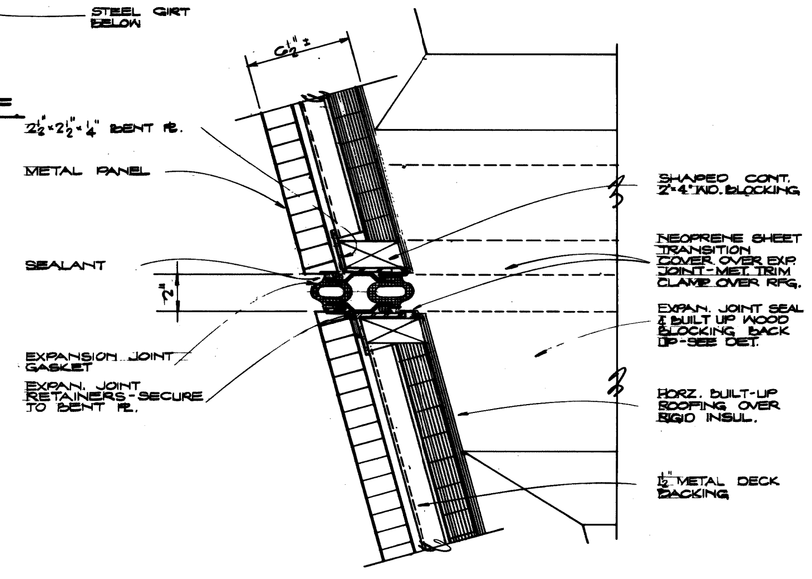

1 / AM-4 SECTION THRU PARAPET
SCALE 2"=1'-0"

Joe Louis Sports Arena
Pedestrian Walkway
For City Engineering Division

SH&G
Smith, Hinchman & Grylls Associates, Inc.
Architects Engineers Planners
455 West Fort Street
Detroit, Michigan 48226
(313)964-3000

SH&G Job. No 11732C

OWNER	5-30-80
Issued For	Date
10-2-79	J.W.
Date	Drawn By
J. Mitch	
Div. Architect/Engineer	
Correlatiog Check	
Project Manager	
Construction Administration	Div. Approval
Division Approval	

Key Plan

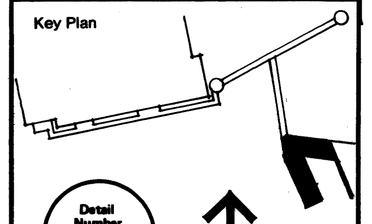

Detail Number / Location or Detail Sheet

N

Drawing Title
ARENA BRIDGE AND RAMP - WALL SECTIONS AND MISC. DETAILS

15031A
Project No.
A-68
Drawing No.
AS NOTED
Scale

9-26-79

MC/PRIMO 71888

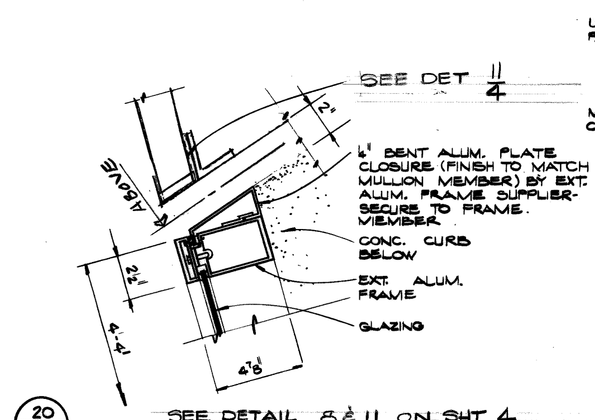

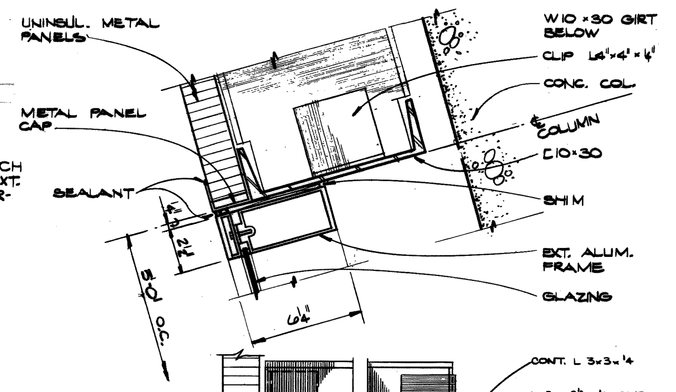

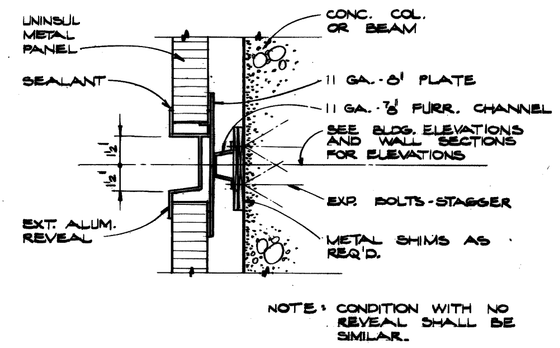

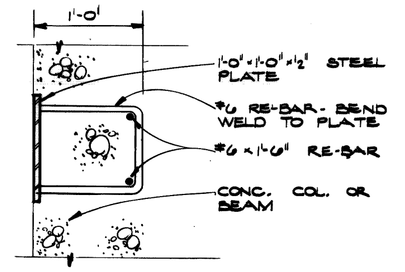

20 AM-3

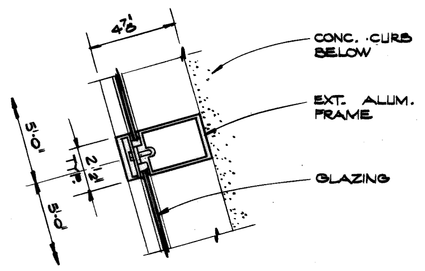

19 AM-3

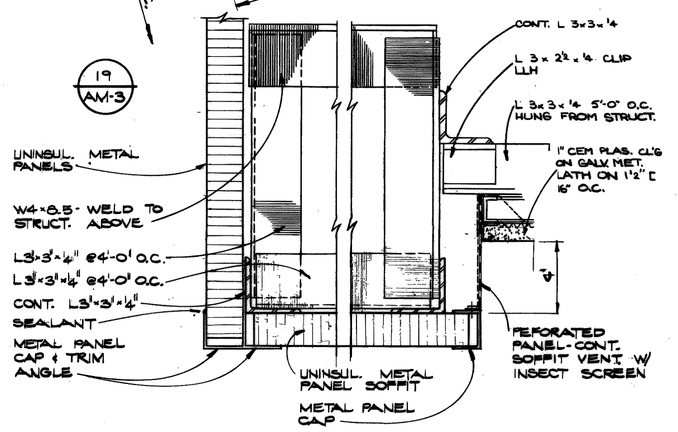

18 AE-2 — TYPICAL CONNECTION @ FURRING CHANNEL

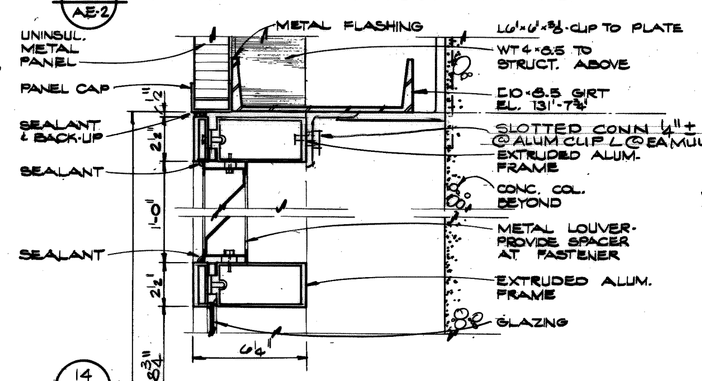

17 TYP. — TYPICAL CAST-IN STEEL PLATE

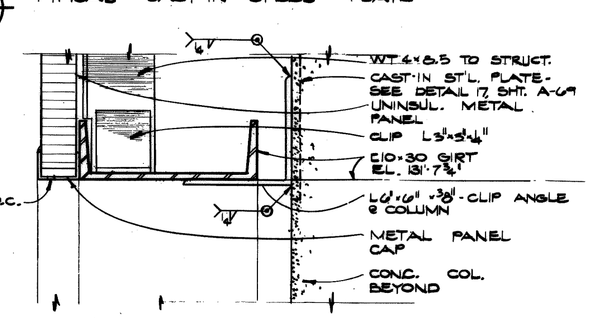

16 AM-3

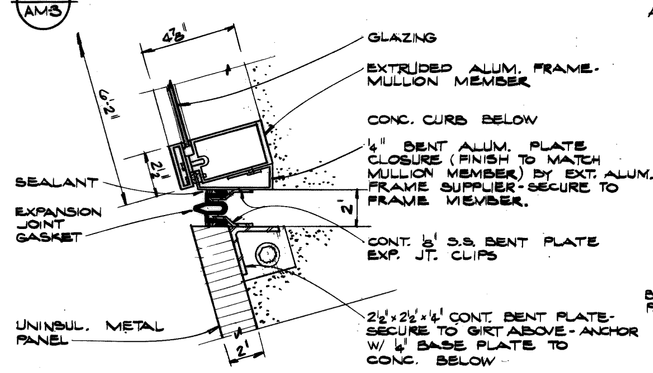

15 A-6.7, A-6.8

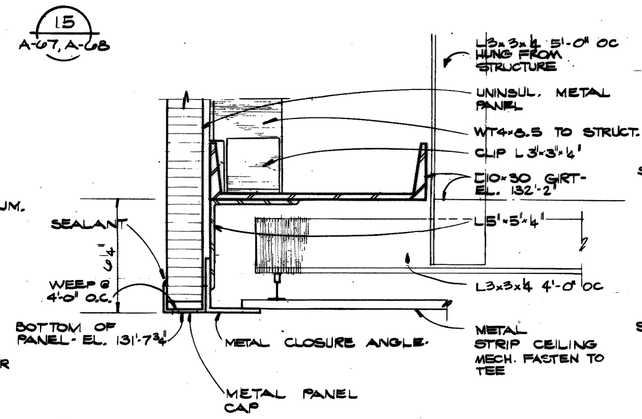

14 A-6.6

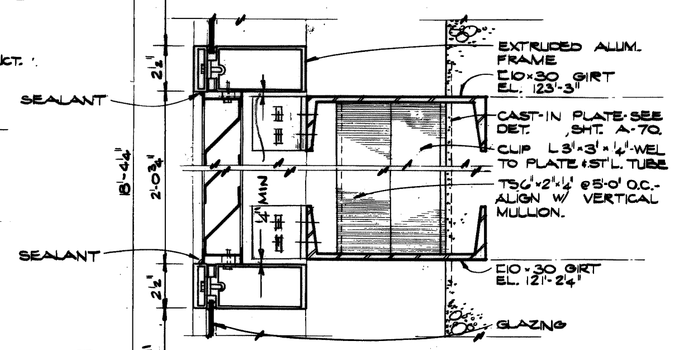

13 A-6.6

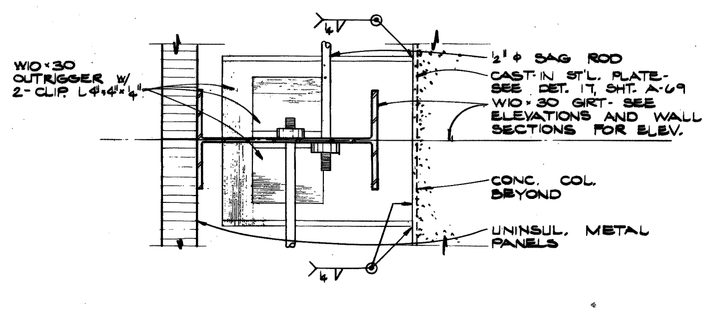

12 A1-3

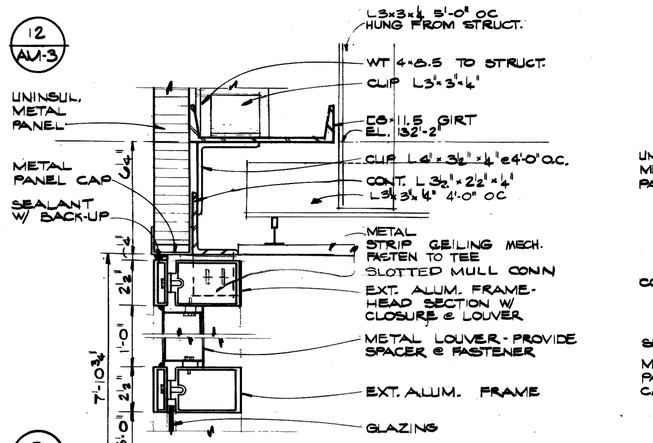

11 A-6.7

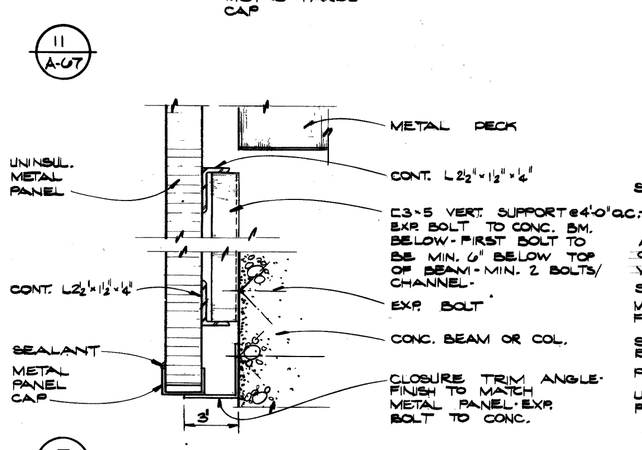

10 A-6.6

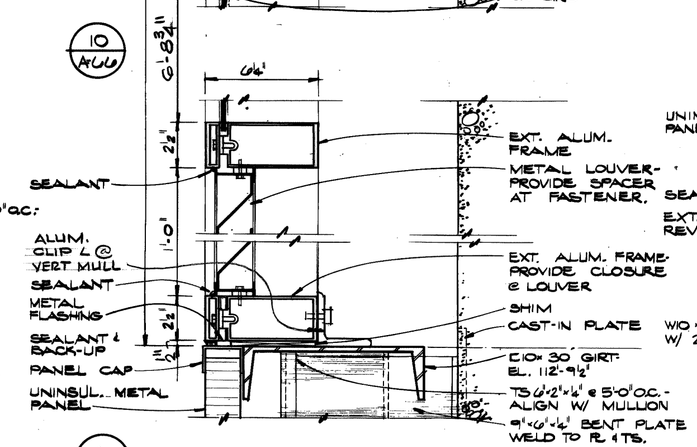

9 A-6.6

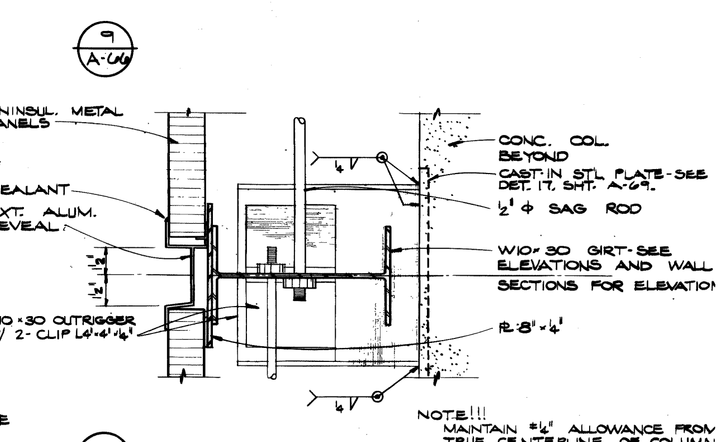

8 A-6.6, A-6.7

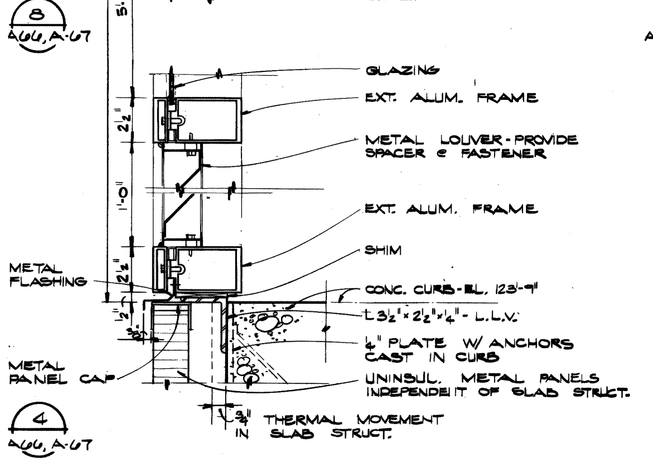

7 A-6.6, A-6.7

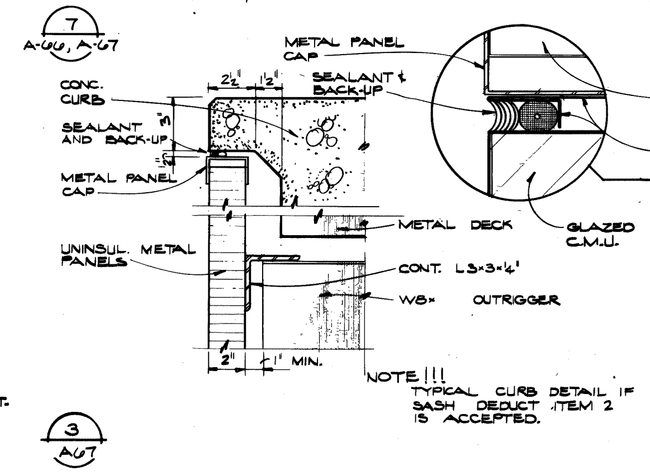

6 A-6.6

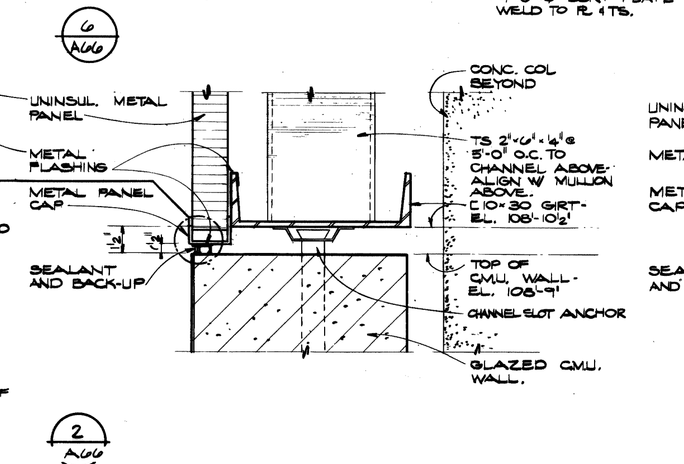

5 A-6.6

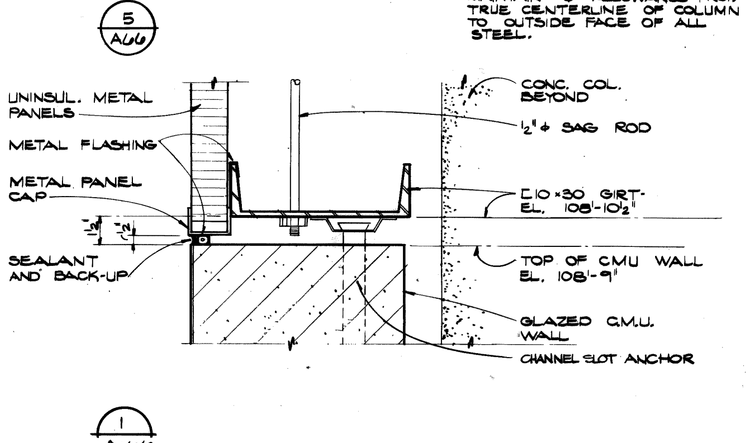

4 A-6.6, A-6.7

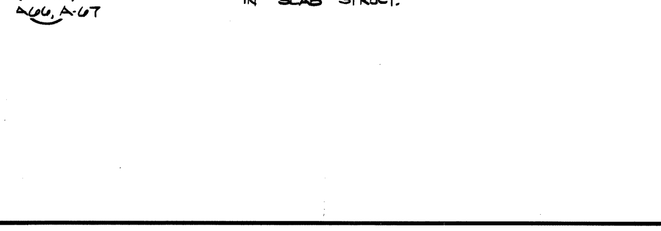

3 A-6.7

2 A-6.6

1 A-6.6

Joe Louis Sports Arena
Pedestrian Walkway
For City Engineering Division

SH&G
Smith, Hinchman & Grylls Associates, Inc.
Architects Engineers Planners
455 West Fort Street
Detroit, Michigan 48226
(313)964-3000

SH&G Job. No. 11732C

OWNER
Issued For — 5-30-80 Date

10-2-79 Date — A.I. Drawn By
Div. Architect/Engineer
Correlation Check
Project Manager
Construction Administration Div. Approval
Division Approval

Key Plan

Detail Number / Location or Detail Sheet

N

Drawing Title
ARENA BRIDGE AND RAMP - DETAILS

15031A Project No.
A-69 Drawing No.
1"=1'-0" Scale

33 of 96

9-26-79

LEGEND

NEW		EXISTING
	COLUMN FOOTING	
	COLUMN LINE	
(12)	COLUMN NUMBER	(Ex)
	CONCRETE	
109	CONTOUR LINE	109
701	COORDINATE	
	FENCE	
(BY OTHER)	FIRE HYDRANT	
	GATE VALVE	
(BY OTHER)	LIGHT POLE	
(BY OTHER)	MANHOLE	
	RETAINING WALL	
x(109) BY OTHER	SPOT ELEVATION	x109.0
x109 PROPOSED		
BY OTHERS	UTILITY LINE	TO BE ABANDONED (T.O.A.) / PLD
(BY OTHER)	CATCH BASIN	
	LIMIT OF CONTRACT SOIL BORING	

E8200 E8300 E8400 E8500 E8600

N 8200 N 8100 N 8000 N 7900 N 7800

ENTRANCE RAMP

NORTH BOUND JOHN LODGE EXPRESSWAY

SOUTH BOUND JOHN LODGE EXPRESSWAY

LARNED ST. EXIT RAMP

JEFFERSON AVE. EXIT RAMP

EXIST GUARD RAIL TO BE REMOVED

EXIST. FENCE TO BE REMOVED

RAMP TOWER

WATER PUMP (EXIST)

M.H. T.E. 106.61 I.E. 94.91

SECOND AVENUE

INLET T.E. 106.08

CONC. WALK

G.V. T.E. 106.08

EXIST FENCE TO BE REMOVED

RETAINING WALL

ABANDON SCAND. MH

EXIST. RETAINING WALL

FOOTING SHOWN FOR REFERENCE ONLY (TYP.) SEE STRUCTURAL DWG. FOR FTG. DETAILS

7" ASPH. PAV.

CONC. BASE

℄ EAST WEST BRIDGE N.82°-32'-38.4"E

℄ NORTH-SOUTH BRIDGE

OVERHEAD SIGN

LIGHT POLE (TYP.)

EXIST JOE LOUIS ARENA PARKING STRUCTURE

FOOTINGS SHOWN FOR REFERENCE ONLY (TYP.) SEE STRUCTURAL DWG. FOR FTG. DETAILS

STAIR-ELEVATOR TOWER

℄ OF COLUMNS

℄ PARKING DECK WALKWAY N66°-35'-29.8"E

N.I.C.

CONC. PAV.

WEST BOUND JEFFERSON AVENUE

EAST BOUND JEFFERSON AVENUE

N.08°-44'-55.4"W.

EXIST 3RD ST. BRIDGE

EXIST JOE LOUIS ARENA

B-1 B-6

TH2

NOTE:
ALL UNDERGROUND UTILITIES INDICATED NEW, RELOCATED OR ABANDONED BY OTHER, SHALL BE FIELD VERIFIED AND COORDINATED WITH UTILITY CO. PRIOR TO CONSTRUCTION.

Joe Louis Sports Arena

Pedestrian Walkway

For City Engineering Division

SH&G
Smith, Hinchman & Grylls Associates, Inc.
Architects Engineers Planners
455 West Fort Street
Detroit, Michigan 48226
(313)964-3000

SH&G Job. No. 11732C

OWNER — 5-30-80
Issued For — Date

1-18-80 — C.W.
Date — Drawn By

Div. Architect/Engineer
Correlation Check
Project Manager
Construction Administrative Div. Approval
Division Approval

Key Plan

Detail Number / Location of Detail Sheet

Drawing Title

SITE PLAN I

15031A
Project No.

C-1
Drawing No.

1"=20'
Scale

34 OF 96

9-26-79

ABBREVIATIONS

B.O.	BY OTHERS
CB	CATCH BASIN
CONC.	CONCRETE
D.E.	DETROIT EDISON
D.I.	DUCTILE IRON
ELEC.	ELECTRIC
ENC.	ENCLOSURE
F.H.	FIRE HYDRANT
FTG.	FOOTING
G	GAS
H.P.	HIGH PRESSURE
I.E.	INVERT ELEVATION
M.H.	MANHOLE
PLD	PUBLIC LIGHTING DEPARTMENT
ST	STORM
T.E.	TOP ELEVATION
TELE.	TELEPHONE
TYP.	TYPICAL
WM	WATER MAIN
DWG	DRAWING
G.V.	GATE VALVE

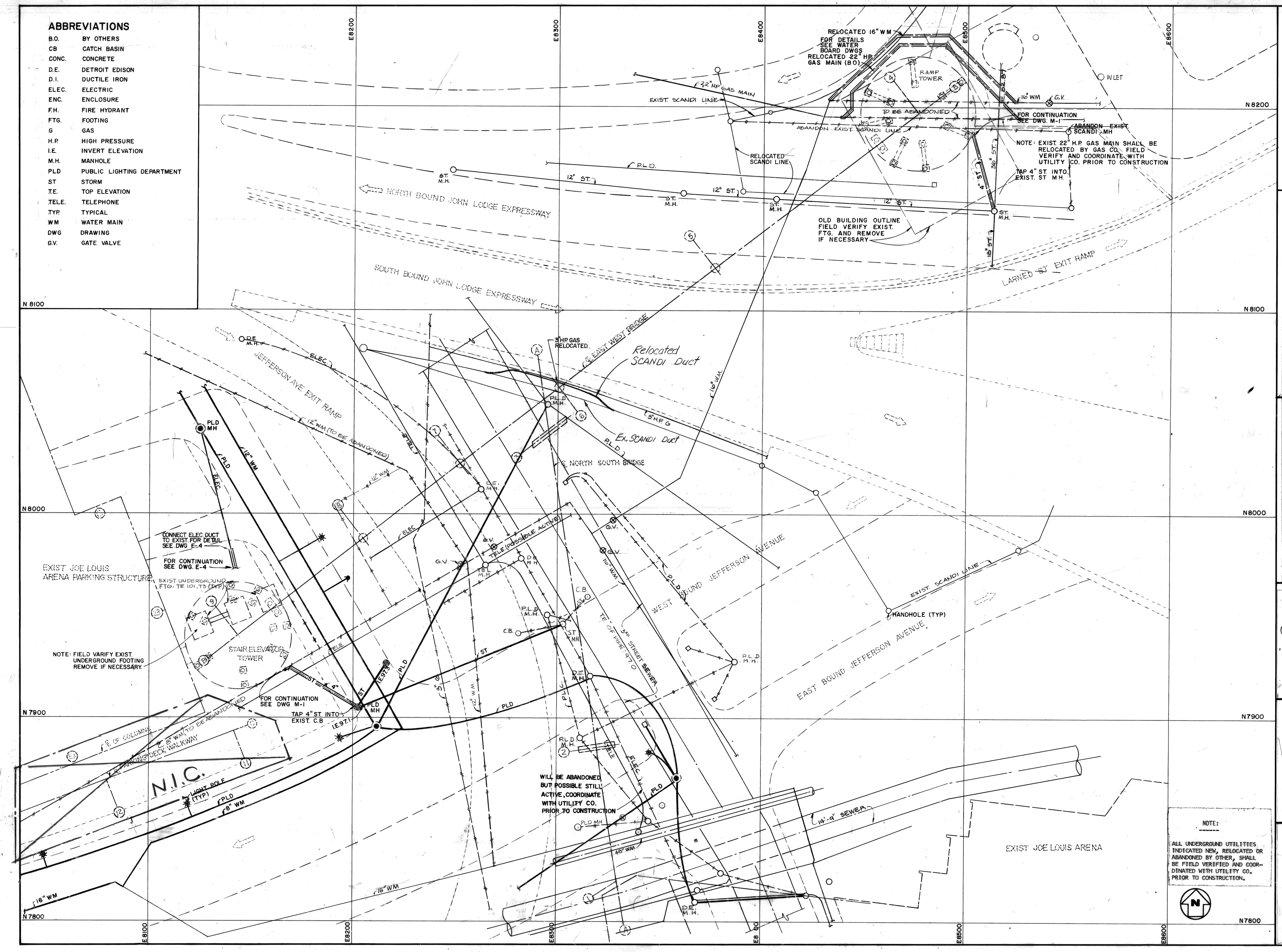

NOTE:

ALL UNDERGROUND UTILITIES INDICATED NEW, RELOCATED OR ABANDONED BY OTHER, SHALL BE FIELD VERIFIED AND COORDINATED WITH UTILITY CO. PRIOR TO CONSTRUCTION.

Joe Louis Sports Arena

Pedestrian Walkway

For City Engineering Division

SH&G
Smith, Hinchman & Grylls Associates, Inc.
Architects Engineers Planners
455 West Fort Street
Detroit, Michigan 48226
(313)964-3000

SH&G Job. No. 11732C

OWNER — Issued For
5-30-80 — Date

1-18-80 — Date
C.W. — Drawn By

Div. Architect/Engineer
Correlation Check
Project Manager
Construction Administrative Div. Approval
Division Approval

Key Plan

Detail Number
Location or Detail Sheet

N

Drawing Title

UTILITY PLAN I

15031A
Project No.

C-2
Drawing No.

1"=20'
Scale

COORDINATES

PT.	NORTH	EAST	PT.	NORTH	EAST
119	8226.72	8518.14	709	7998.48	8064.36
350	7940.23	8144.18	710	8007.24	8086.71
351	8195.15	8476.93	720	7853.11	8002.94
352	8055.09	8294.11	721	7836.51	8009.45
356	7817.39	8330.69	722	7825.92	7982.45
357	8119.53	8378.23	723	7842.53	7975.94
358	8060.24	8300.83	725	7779.38	7814.87
359	8023.75	8253.20	726	7762.78	7821.38
360	7987.26	8205.57	727	7752.19	7794.38
361	7819.41	8330.38	728	7768.80	7787.87
362	8040.13	8296.41	729	7798.81	7900.17
701	7902.12	8127.92	730	7742.42	7756.33
702	7731.66	7693.15	731	7740.25	7671.25
703	7746.55	7687.31	732	7723.65	7677.75
704	7714.43	7605.38	733	7713.07	7650.76
705	7804.66	7570.00	734	7729.67	7644.25
706	7772.54	7488.07	765	7869.32	8080.00
707	7877.66	7446.86	768	7713.22	7681.85
708	8103.61	8023.15	769	7893.90	8142.69
			361S	7881.92	8320.76

NOTE:
ADD 90,000.00 TO BOTH THE NORTH & EAST COORDINATE TO CONVERT TO THE CITY OF DETROIT COORDINATE SYSTEM

E 7600 E 7700 E 7800 E 7900 E 8000

N 8100 N 8000 N 7900 N 7800 N 7700

EXIST. JOE LOUIS ARENA
PARKING STRUCTURE

NOTE:
ALL UNDERGROUND UTILITIES INDICATED NEW, RELOCATED OR ABANDONED BY OTHER, SHALL BE FIELD VERIFIED AND COORDINATED WITH UTILITY CO. PRIOR TO CONSTRUCTION.

N.I.C.

SEE STRUCTURAL DWG. FOR FTG. DETAILS

℄ PARKING DECK WALKWAY
N68°-35'-29.8"E

℄ OF COLUMNS

STAIR 2

STAIR 3

STAIR 4

WEST BOUND JEFFERSON AVENUE

EAST BOUND JEFFERSON AVENUE

M.H.

TH-11

Joe Louis Sports Arena

Pedestrian Walkway

For City Engineering Division

SH&G
Smith, Hinchman & Grylls Associates, Inc.
Architects Engineers Planners
455 West Fort Street
Detroit, Michigan 48226
(313)964-3000
SH&G Job.No.11732C

OWNER — 5-20-80
Issued For — Date

1-18-80 — C.W.
Date — Drawn By

Div. Architect/Engineer

Correction Check

Project Manager

Construction Administrative Div. Approval

Division Approval

Key Plan

Detail Number / Location or Detail Sheet

Drawing Title

SITE PLAN 2

15031A
Project No.

C-3
Drawing No.

1" = 20'
Scale

9-26-79

MC/PRM+ 71858

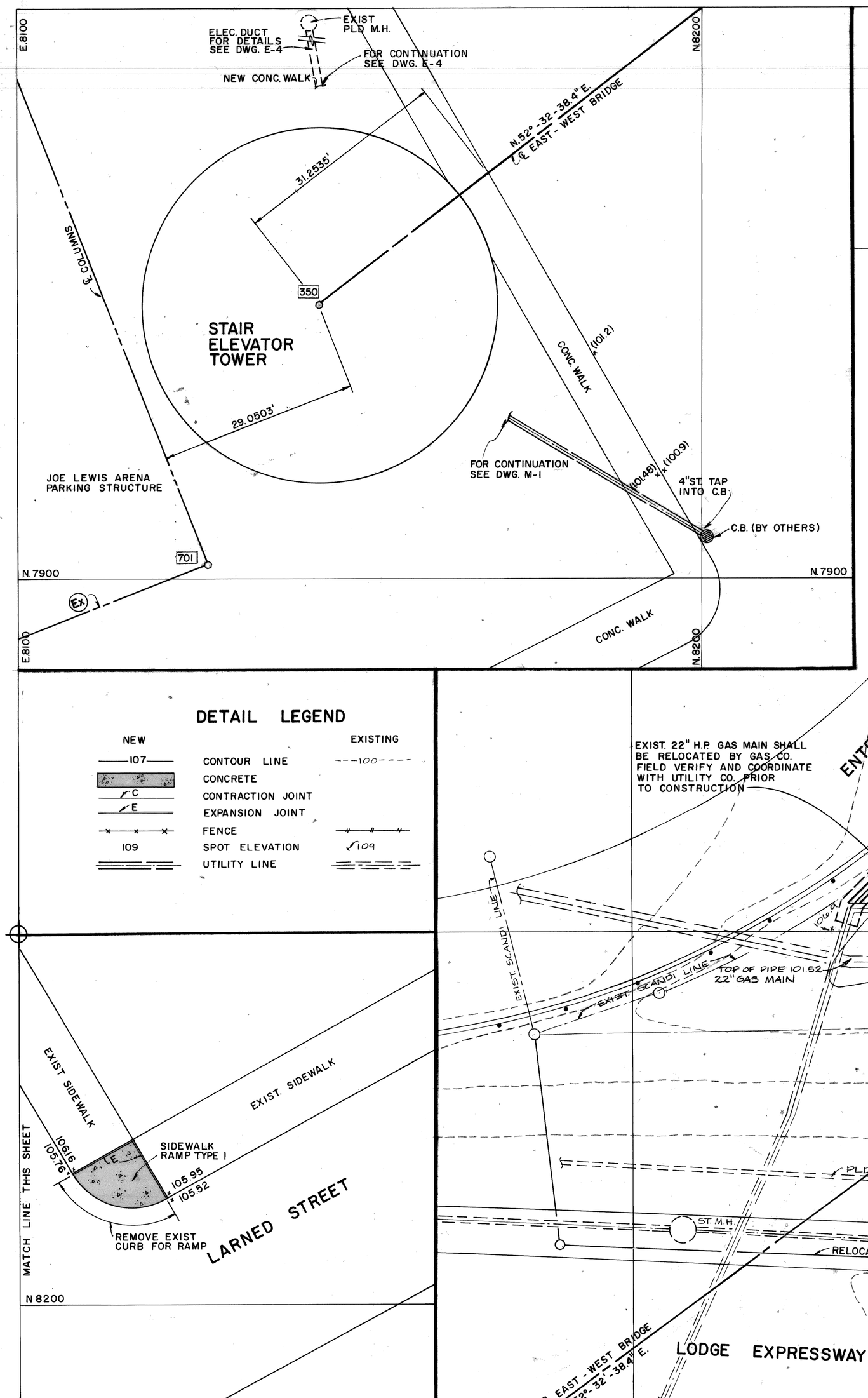

DETAIL LEGEND

NEW		EXISTING
107	CONTOUR LINE	100
	CONCRETE	
C	CONTRACTION JOINT	
E	EXPANSION JOINT	
	FENCE	
109	SPOT ELEVATION	109
	UTILITY LINE	

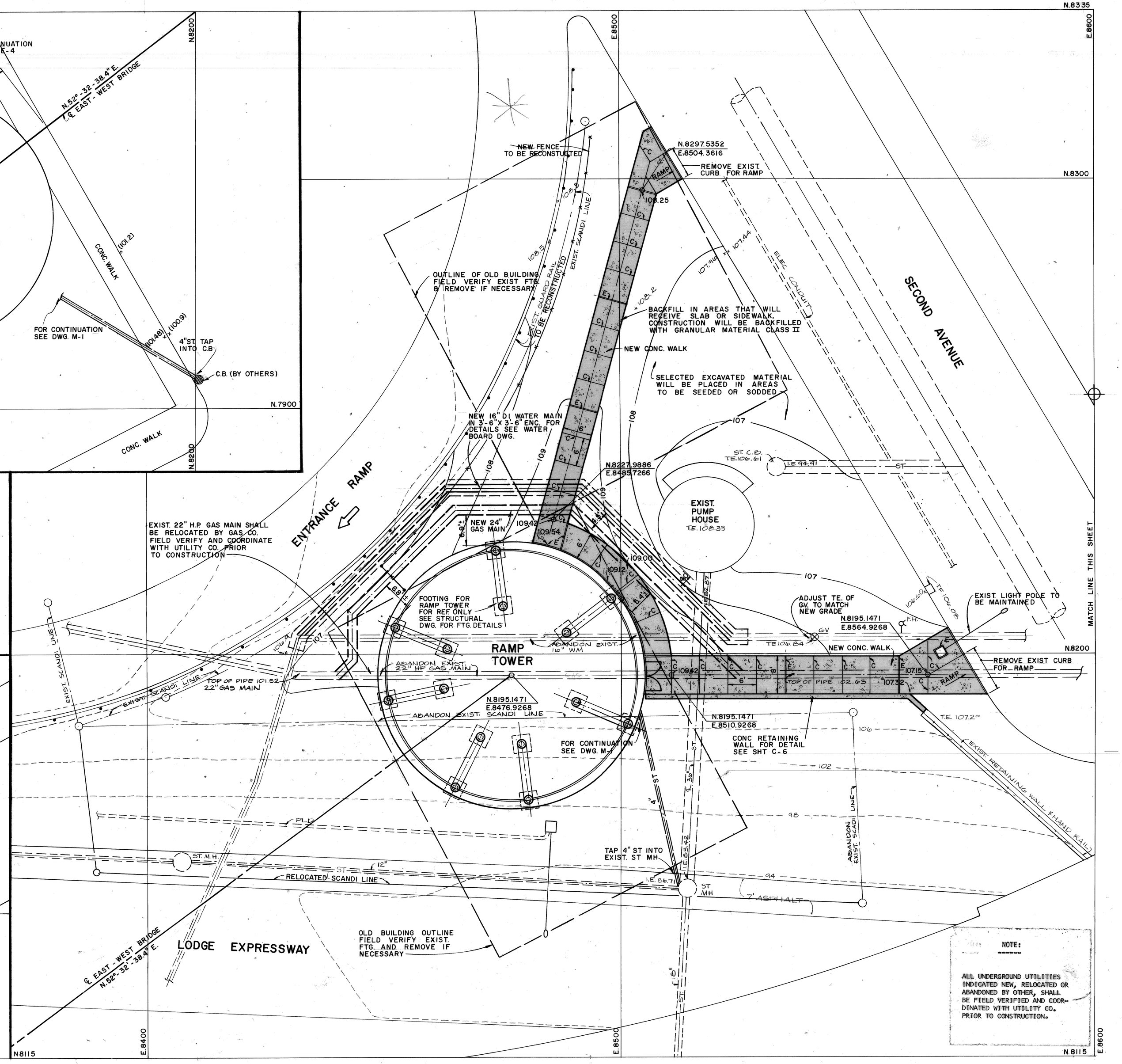

NOTE:

ALL UNDERGROUND UTILITIES INDICATED NEW, RELOCATED OR ABANDONED BY OTHER, SHALL BE FIELD VERIFIED AND COORDINATED WITH UTILITY CO. PRIOR TO CONSTRUCTION.

Joe Louis Sports Arena

Pedestrian Walkway

For City Engineering Division

SH&G
Smith, Hinchman & Grylls Associates, Inc.
Architects Engineers Planners
455 West Fort Street
Detroit, Michigan 48226
(313)964-3000

SH&G Job. No. 11732C

OWNER — Issued For — 5-30-80 Date

1-18-80 Date — CW Drawn By

Div. Architect/Engineer

Correlation Check

Project Manager

Construction Administrative Div. Approval

Division Approval

Key Plan

Detail Number / Location or Detail Sheet

N

Drawing Title

DETAIL SITE PLAN

15031A Project No.

C-5 Drawing No.

1" = 10' Scale

37 OF 96

9-26-79

MC/PRMe 71856

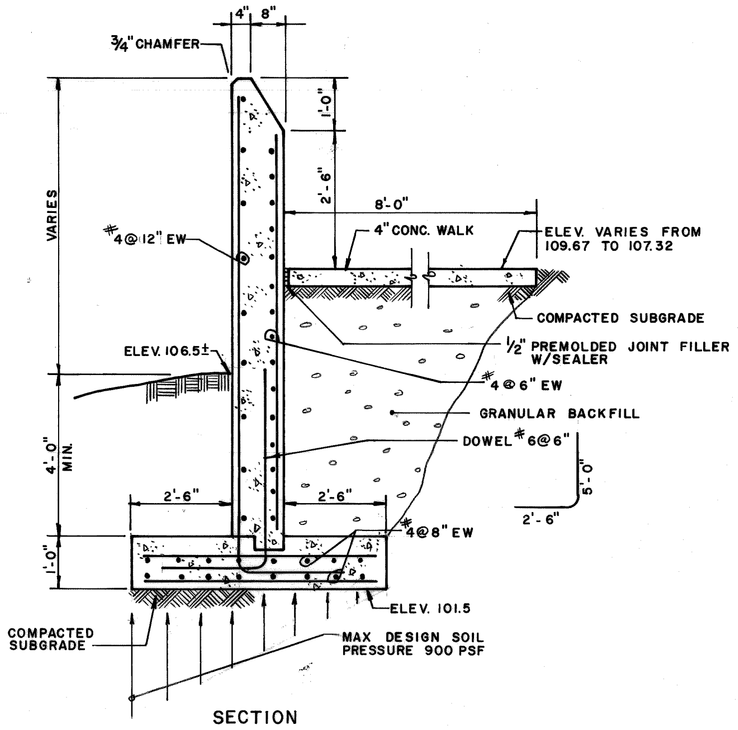

SECTION

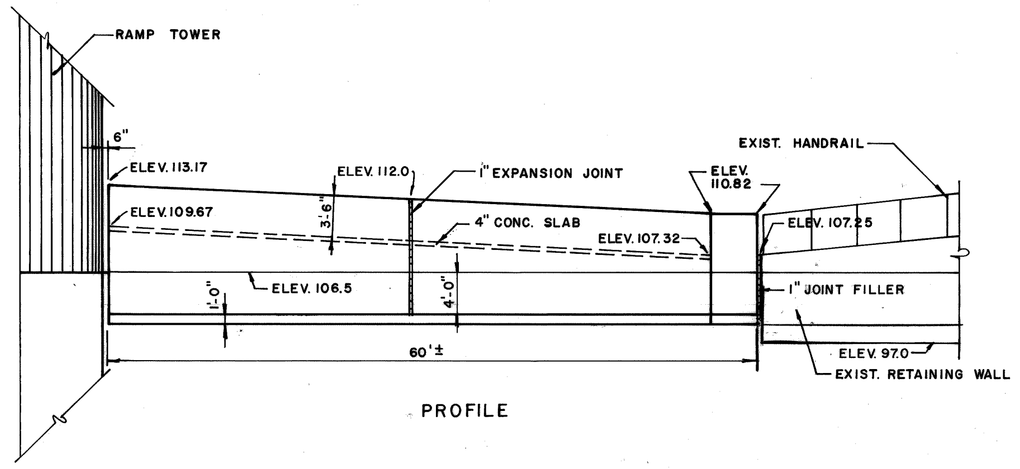

PROFILE

RETAINING WALL

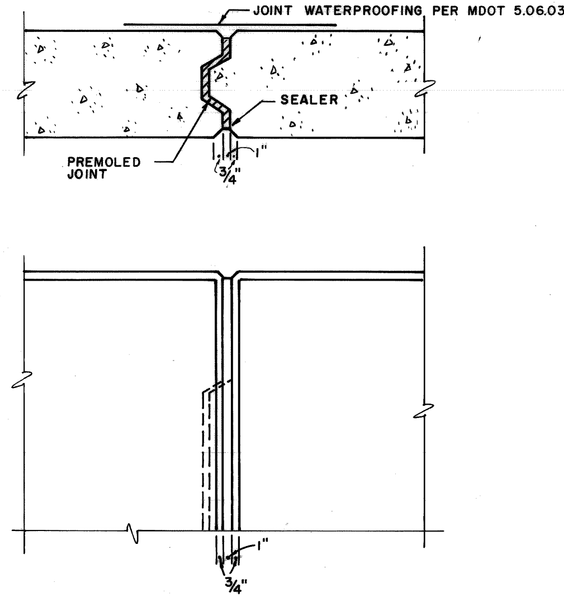

EXPANSION JOINT

LOG OF SUBSURFACE PROFILE

Classifications By: Halpert, Neyer & Tiseo

Ground Surface Elevation: 99.8

ELEVATION-FEET

ASPHALT.
CRUSHED LIMESTONE.
FILL: Medium Brown SILTY CLAY with Some Sand and Gravel and Pieces of Brick.
Medium Gray SILTY CLAY.
Compact Brown and Gray GRAVEL with Some Sand.
Medium to Soft Gray SILTY CLAY, Little Sand, Rouge Streaks.
Medium Compact Gray SAND with Some Clay and Gravel.
Medium to Soft Gray SILTY CLAY with Trace of Sand.
Continued on Figure No. 2

SOIL SAMPLE DATA

SAMPLE NUMBER	ELEV. (FEET)	NATURAL MOISTURE CONTENT (PERCENT)	DRY DENSITY (PCF)	PENETRATION* RESISTANCE 0 20 40 60 80 100
S-1	94.8	-	-	1-5-6
S-2	89.8	-	-	2-3-4
LS-1	84.8	36.5	83.2	1/2-1/2-1
S-3	79.8	-	-	19-18-34
LS-2	74.8	-	-	1-1-2
LS-3	69.8	-	-	2-3-4
LS-4	64.8	19.5	112.1	3-4-4
LS-5	59.3	-	-	2-2-3
LS-6	54.8	-	-	2-2-4
LS-7	49.8	-	-	3-7-5
LS-8	44.8	-	-	3-5-6
LS-9	39.8	19.7	111.4	5-8-9
LS-10	34.8	-	-	5-5-8
LS-11	29.8	-	-	7-10-12
LS-12	24.8	-	-	7-11-22
LS-13	19.8	-	-	4-6-9
LS-14	14.8	-	-	4-5-6
LS-15	9.8	-	-	4-6-10
S-3	4.8	-	-	
LS-16	0.2	10.5	130.5	112/12"

TOTAL DEPTH: 116.0'
BORING STARTED: 12/8/76
BORING COMPLETED: 12/10/76
INSPECTOR: D. Vensel
DRILLER: B. Singleton
CONTRACTOR: Able Drilling, Inc.

▽ WATER LEVEL IN HOLE AT INDICATED NUMBER OF HOURS AFTER COMPLETION OF BORING WITH - FEET OF CASING IN PLACE.

*PENETRATION RESISTANCE: NUMBER OF BLOWS REQUIRED TO DRIVE 2.0 INCH O.D. SOIL SAMPLER 12 INCHES, USING 140 POUND WEIGHT WITH 30 INCH FREE FALL.

HALPERT, NEYER & TISEO
CONSULTING SITE AND GEOTECHNICAL ENGINEERS
LOG OF TEST BORING NUMBER 1

PROPOSED ICE ARENA
JEFFERSON AND THIRD AVENUES
DETROIT, MICHIGAN

APPROVED BY: DGN | DATE: 12/16/76
PROJECT NO. 87501 | FIGURE NO. 1

Sheet 1 of 2

LOG OF SUBSURFACE PROFILE

Classifications By: Halpert, Neyer & Tiseo

Ground Surface Elevation: 99.8

ELEVATION-FEET

Very Hard Gray CLAYEY SILT with Some Sand and Pebbles (Hardpan).
Hard Gray LIMESTONE.

NOTES:
1. Hole advanced to 10 feet with 6-inch diameter solid-stem auger.
2. Below 10 feet, hole advanced utilizing wash method with 4-inch diameter casing.
3. Rock cored with NX diamond core barrel with 106 feet of NX casing in place.
4. Incomplete core recovery on run 2 apparently due to redrilling after first attempt to lift the core did not break the rock core.
5. Artesian condition encountered in rock.
6. Hole grouted with cement upon completion.

SOIL SAMPLE DATA

SAMPLE NUMBER	ELEV. (FEET)	NATURAL MOISTURE CONTENT (PERCENT)	DRY DENSITY (PCF)	PENETRATION* RESISTANCE 0 20 40 60 80 100
LS-7	- 5.2	-	-	220/12"
R-1	-10.2	4' recovery on 4' run.		40/12"
R-2	-16.2	2.8' recovery on 6' run.		

Percent Core Recovery

TOTAL DEPTH: 116.0'
BORING STARTED: 12/8/76
BORING COMPLETED: 12/10/76
INSPECTOR: D. Vensel
DRILLER: B. Singleton
CONTRACTOR: Able Drilling, Inc.

▽ WATER LEVEL IN HOLE AT INDICATED NUMBER OF HOURS AFTER COMPLETION OF BORING WITH - FEET OF CASING IN PLACE.

*PENETRATION RESISTANCE: NUMBER OF BLOWS REQUIRED TO DRIVE 2.0 INCH O.D. SOIL SAMPLER 12 INCHES, USING 140 POUND WEIGHT WITH 30 INCH FREE FALL.

HALPERT, NEYER & TISEO
CONSULTING SITE AND GEOTECHNICAL ENGINEERS
LOG OF TEST BORING NUMBER 1

PROPOSED ICE ARENA
JEFFERSON AND THIRD AVENUES
DETROIT, MICHIGAN

APPROVED BY: DGN | DATE: 12/16/76
PROJECT NO. 87501 | FIGURE NO. 2

Sheet 2 of 2

LOG OF SUBSURFACE PROFILE

Classifications By: Halpert, Neyer & Tiseo

Ground Surface Elevation: 99.4

ELEVATION-FEET

ASPHALT.
SLAG SUBGRADE.
FILL: Medium Dark Gray CLAY with Gravel, Brick, Cinders, etc.
Very Stiff Mottled Brown and Gray SILTY CLAY with Some Fine Sand and Pebbles.
Stiff Gray SILTY CLAY with Little Fine Sand and Pebbles.
Very Stiff Mottled Brown and Gray SILTY CLAY with Little Fine Sand and Pebbles.
Soft to Medium Gray SILTY CLAY.
Continued on Figure No. 11

SOIL SAMPLE DATA

SAMPLE NUMBER	ELEV. (FEET)	NATURAL MOISTURE CONTENT (PERCENT)	DRY DENSITY (PCF)	PENETRATION* RESISTANCE 0 20 40 60 80 100
LS-1	94.4	-	-	4-7-8
LS-2	89.4	-	-	4-5-6
LS-3	84.4	-	-	8-13-16
LS-4	79.4	-	-	4-4-5
LS-5	74.4	-	-	2-2-3
LS-6	69.4	-	-	2-2-3
ST-1	48.9	-	-	PUSHED
LS-7	49.4	-	-	2-3-4
ST-2	38.9	-	-	PUSHED
LS-8	29.4	-	-	4-6-7
LS-9	19.4	24.7	99.8	6-7-10
LS-10	9.4	9.4	134.1	5-6-9

TOTAL DEPTH: 106.4'
BORING STARTED: 12/17/76
BORING COMPLETED: 12/21/76
INSPECTOR: D. Vensel
DRILLER: B. Singleton
CONTRACTOR: Able Drilling, Inc.

▽ WATER LEVEL IN HOLE AT INDICATED NUMBER OF HOURS AFTER COMPLETION OF BORING WITH - FEET OF CASING IN PLACE.

*PENETRATION RESISTANCE: NUMBER OF BLOWS REQUIRED TO DRIVE 2.0 INCH O.D. SOIL SAMPLER 12 INCHES, USING 140 POUND WEIGHT WITH 30 INCH FREE FALL.

HALPERT, NEYER & TISEO
CONSULTING SITE AND GEOTECHNICAL ENGINEERS
LOG OF TEST BORING NUMBER 6

PROPOSED ICE ARENA
JEFFERSON AND THIRD AVENUES
DETROIT, MICHIGAN

APPROVED BY: DGN | DATE: 12/23/76
PROJECT NO. 87501 | FIGURE NO. 10

Sheet 1 of 2

LOG OF SUBSURFACE PROFILE

Classifications By: Halpert, Neyer & Tiseo

Ground Surface Elevation: 99.4

ELEVATION-FEET

Very Hard Gray CLAYEY SILT with Sand and Pebbles (Hardpan).
Refusal at Elev. 106.4'

NOTES:
1. Hole advanced to 10 feet with 6-inch diameter solid-stem auger.
2. Below 10 feet, hole advanced utilizing wash method with 4-inch diameter casing.
3. Minimal amount of water encountered in "Hardpan".
4. Hole grouted with cement upon completion.

SOIL SAMPLE DATA

SAMPLE NUMBER	ELEV. (FEET)	NATURAL MOISTURE CONTENT (PERCENT)	DRY DENSITY (PCF)	PENETRATION* RESISTANCE 0 20 40 60 80 100
LS-11	4.9	25.1	101.4	113/6"
S-	1.3	-	-	100/1"
LS-12	-4.6	-	-	225/6"

TOTAL DEPTH: 106.4'
BORING STARTED: 12/17/76
BORING COMPLETED: 12/21/76
INSPECTOR: D. Vensel
DRILLER: B. Singleton
CONTRACTOR: Able Drilling, Inc.

▽ WATER LEVEL IN HOLE AT INDICATED NUMBER OF HOURS AFTER COMPLETION OF BORING WITH - FEET OF CASING IN PLACE.

*PENETRATION RESISTANCE: NUMBER OF BLOWS REQUIRED TO DRIVE 2.0 INCH O.D. SOIL SAMPLER 12 INCHES, USING 140 POUND WEIGHT WITH 30 INCH FREE FALL.

HALPERT, NEYER & TISEO
CONSULTING SITE AND GEOTECHNICAL ENGINEERS
LOG OF TEST BORING NUMBER 6

PROPOSED ICE ARENA
JEFFERSON AND THIRD AVENUES
DETROIT, MICHIGAN

APPROVED BY: DGN | DATE: 12/23/76
PROJECT NO. 87501 | FIGURE NO. 11

Sheet 2 of 2

Joe Louis Sports Arena

Pedestrian Walkway

For City Engineering Division

SH&G
Smith, Hinchman & Grylls Associates, Inc.
Architects Engineers Planners
455 West Fort Street
Detroit, Michigan 48226
(313)964-3000

SH&G Job. No. 11732C

OWNER — Issued For — 5-30-80 Date

3-16-80 Date — C.W Drawn By

Div. Architect/Engineer

Correlation Check

Project Manager

Construction Administrative Div. Approval

Division Approval

Key Plan

Drawing Title

DETAILS

15031A
Project No.

C-6
Drawing No.

NOTED
Scale

38 of 96

MC/PRM# 71886

Project Ramp to Joe Louis Parking Garage Job No 78174
Location Detroit, Michigan Permit No.

LOG OF BORING

Boring Number 2 | Crew Chief Canfield | Ground Water: Encountered none ft. | Plugging Record: Boring Sealed with Ex.Soil
Depth Drilled 111 ft | Helper Roth | After Completion ft. | between ft. & ft.
Surface Elev. 103.2 ft | Drill Rig CME 55 | After hrs. ft. | between ft. & ft.
Date Started 3-14-79 | Boring Method 8" HSA | Volume | between ft. & ft.
Date Completed 3-14-79 | and Rotary | Seepage at ft. | between ft. & ft.

Depth In Feet	Sample Type	Penetration ASTM D 1586	SOIL DESCRIPTION	Laboratory Data: N.P.M.	N.D.	S.S.	Classif. Data
		3-2-2	FILL SAND-slightly compact dirty with stones, misc. rubble, occ.trace of clay				
4.0		5-9-8	CLAY-very stiff gray with occ.brown mottling, occ. pebbles, occ.sand seams sandy-silty				
		7-10-11					
9.0		5-5-5	CLAY-stiff gray-brown sandy with occ.sand seams,occ. gray clay seams,occ. pebbles				
13.5		3-4-5	CLAY-firm gray, silty slightly sandy occ. pebbles				
		3-4-4					
		3-3-5					
28.0		3-3-5	CLAY-firm gray very silty sandy occ.pebbles occ. sand seams				
		3-3-4					
		S.T. 1					

Project Ramp to Joe Louis Parking Garage Job No. 78174
Location Detroit, Michigan Permit No.

LOG OF BORING

Boring Number 2 | Crew Chief | Ground Water: Encountered ft. | Plugging Record: Boring Sealed with
Depth Drilled ft | Helper | After Completion ft. | between ft. & ft.
Surface Elev. ft | Drill Rig | After hrs. ft. | between ft. & ft.
Date Started | Boring Method | Volume | between ft. & ft.
Date Completed | | Seepage at ft. | between ft. & ft.

Depth In Feet	Sample Type	Penetration ASTM D 1586	SOIL DESCRIPTION	Laboratory Data: N.P.M.	N.D.	S.S.	Classif. Data
		S.T. 1	CLAY-firm gray very silty sandy occ.pebbles occ. sand seams				
		2-2-2					
		2-3-3					
		3-4-4					
57.0			CLAY-firm to stiff gray very silty slightly sandy occ. pebbles				
		S.T. 2					
		4-4-6					
		3-5-6					
		4-5-6					
		4-6-7					

Project Ramp to Joe Louis Parking Garage Job No 78174
Location Detroit, Michigan Permit No.

LOG OF BORING

Boring Number 2 | Crew Chief | Ground Water: Encountered ft. | Plugging Record: Boring Sealed with
Depth Drilled ft | Helper | After Completion ft. | between ft. & ft.
Surface Elev. ft | Drill Rig | After hrs. ft. | between ft. & ft.
Date Started | Boring Method | Volume | between ft. & ft.
Date Completed | | Seepage at ft. | between ft. & ft.

Depth In Feet	Sample Type	Penetration ASTM D 1586	SOIL DESCRIPTION	Laboratory Data: N.P.M.	N.D.	S.S.	Classif. Data
		4-6-7	CLAY-firm to stiff gray very silty slightly sandy occ. pebbles				
		5-6-7					
		4-4-5					
95.5		4-9-15	SAND-extremely compact gray medium				
97.5			CLAY-extremely stiff gray sandy slightly silty occ. pebbles, stones				
		65-113					
		25-34-48					
111.0		32-100/2"	Limestone End of boring				

Project Ramp to Joe Louis Parking Garage Job No. 78174
Location Detroit, Michigan Permit No.

LOG OF BORING

Boring Number 11 | Crew Chief Canfield | Ground Water: Encountered 12± ft. | Plugging Record: Boring Sealed with Ex.Soil
Depth Drilled 110 ft | Helper Roth | After Completion ft. | between 0 ft. & 110 ft.
Surface Elev. 100.15 ft | Drill Rig CME 55 | After hrs. ft. | between ft. & ft.
Date Started 3-19-79 | Boring Method 8" HSA | Volume | between ft. & ft.
Date Completed 3-19-79 | | Seepage at ft. | between ft. & ft.

Depth In Feet	Sample Type	Penetration ASTM D 1586	SOIL DESCRIPTION	Laboratory Data: N.P.M.	N.D.	S.S.	Classif. Data
0.1			ASPHALT				
1.0			GRANITE BLOCKS				
1.5			CONCRETE				
3.0		5-5-5	FILL SAND-compact brown med traces of clay,gravel, rubble				
		6-7-10	CLAY-very stiff brn.silty-sandy occ.pebbles occ. gray mottling				
		6-9-11					
		6-9-12					
12.0		3-4-5	CLAY-stiff gray silty sandy occ. pebble				
18.0		2-3-3	CLAY-firm gray very silty slightly sandy,pebbles				
		2-3-2					
		2-3-2					
		3-2-4					
		S.T.#1					

Project Ramp to Joe Louis Parking Garage Job No. 78174
Location Detroit, Michigan Permit No.

LOG OF BORING

Boring Number 11 | Crew Chief | Ground Water Encountered ft. | Plugging Record: Boring Sealed with
Depth Drilled ft | Helper | After Completion ft. | between ft. & ft.
Surface Elev. ft | Drill Rig | After hrs. ft. | between ft. & ft.
Date Started | Boring Method | Volume | between ft. & ft.
Date Completed | | Seepage at ft. | between ft. & ft.

Depth In Feet	Sample Type	Penetration ASTM D 1586	SOIL DESCRIPTION	Laboratory Data: N.P.M.	N.D.	S.S.	Classif. Data
		S.T.#1	CLAY-firm gray very silty slightly sandy occ. pebbles				
		2-2-2					
		2-3-4					
52.0		3-4-4	CLAY-stiff gray very silty sandy occ.pebbles				
		S.T.#2					
		3-3-5					
		4-6-6					
		4-5-7					
77.0		5-11-13	CLAY-very stiff gray very sandy sand seams,pebbles				

Project Ramp to Joe Louis Parking Garage Job No. 78174
Location Detroit, Michigan Permit No.

LOG OF BORING

Boring Number 11 | Crew Chief | Ground Water Encountered ft. | Plugging Record: Boring Sealed with
Depth Drilled ft | Helper | After Completion ft. | between ft. & ft.
Surface Elev. ft | Drill Rig | After hrs. ft. | between ft. & ft.
Date Started | Boring Method | Volume | between ft. & ft.
Date Completed | | Seepage at ft. | between ft. & ft.

Depth In Feet	Sample Type	Penetration ASTM D 1586	SOIL DESCRIPTION	Laboratory Data: N.P.M.	N.D.	S.S.	Classif. Data
		5-11-13	CLAY-very stiff gray very sandy occ.sand seams pebbles				
83.0		4-5-6					
		3-5-5	CLAY-stiff gray very silty slightly sandy occ. pebbles				
93.5		29-44-59					
			SAND-extremely compact gray med.with gravel layers stones				
99.5		100/5"	CLAY-extremely stiff gray very silty occ.silt seams,occ.pebbles				
		26-34-43					
109.0			LIMESTONE				
110.0			End of boring				

Joe Louis Sports Arena
Pedestrian Walkway
For City Engineering Division

SH&G
Smith, Hinchman & Grylls Associates, Inc.
Architects Engineers Planners
455 West Fort Street
Detroit, Michigan 48226
(313)964-3000

SH&G Job. No. 11732C

OWNER
Issued For
5-30-80
Date

5-16-80 Date | CW Drawn By
Div. Architect/Engineer
B. Wendlester
Correlation Check
Project Manager
Construction Administrative Div. Approval
Division Approval

Key Plan

Drawing Title

DETAILS

15031A
Project No.
C-7
Drawing No.
Scale

9-26-79

TSR 250 1-79 69399*

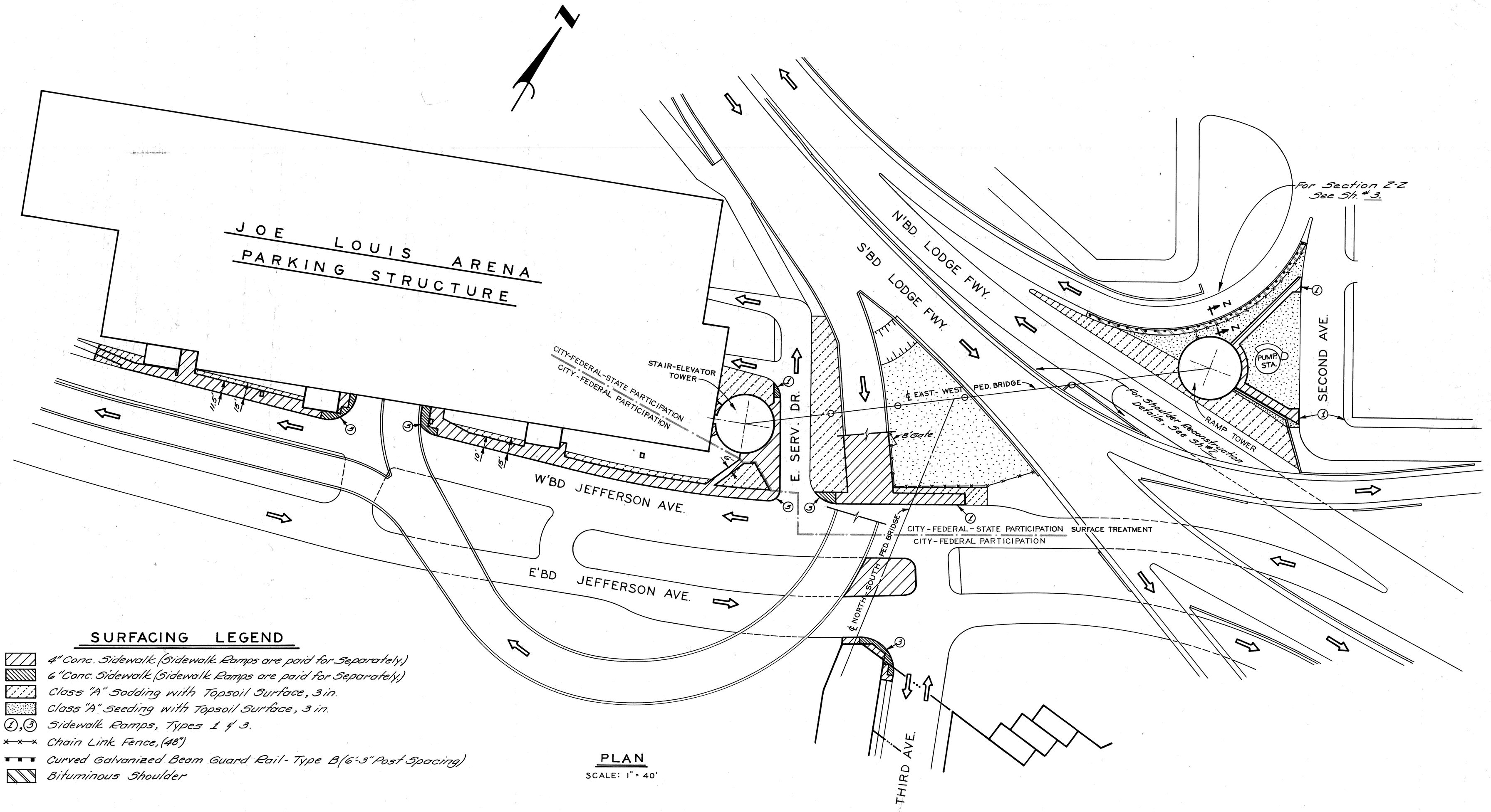

SURFACING LEGEND

- 4" Conc. Sidewalk (Sidewalk Ramps are paid for Separately)
- 6" Conc. Sidewalk (Sidewalk Ramps are paid for Separately)
- Class "A" Sodding with Topsoil Surface, 3 in.
- Class "A" Seeding with Topsoil Surface, 3 in.
- ①, ③ Sidewalk Ramps, Types 1 & 3.
- Chain Link Fence, (48")
- Curved Galvanized Beam Guard Rail - Type B (6'-3" Post Spacing)
- Bituminous Shoulder

PLAN

SCALE: 1" = 40'

COOR'D	DESCRIPTION	DR'N	CK'D	AP'VD	DATE

REVISIONS LOCATED BY COORDINATES ON SHEET

REFERENCE DRAWINGS

DESIGNED BY

DRAWN BY MAP

TRACED BY

CHECKED BY

APPROVED:

ENGINEER OF STREETS

HIGHWAY ENGINEER

CITY OF DETROIT
CITY ENGINEERING DIVISION - EPMD
BUREAUS OF STREETS AND HIGHWAYS

JOE LOUIS ARENA PEDESTRIAN WALKWAYS

SHEET C-8 OF SHEETS

CONTRACT NO. 15031A

ASSIGNMENT NO.

DATE 5-14-80

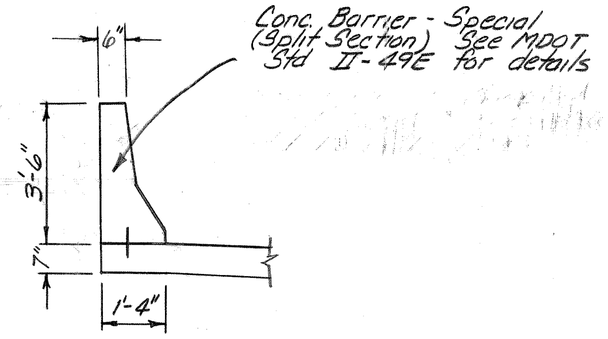

SECTION A-A

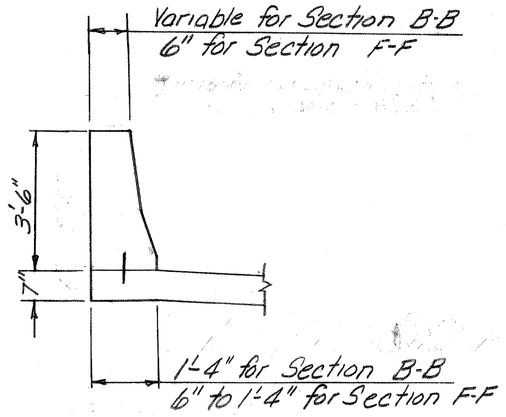

SECTION B-B AND SECTION F-F

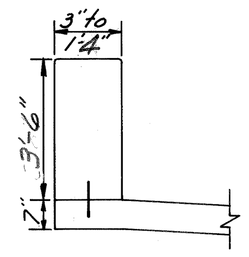

SECTION C-C
NO SCALE

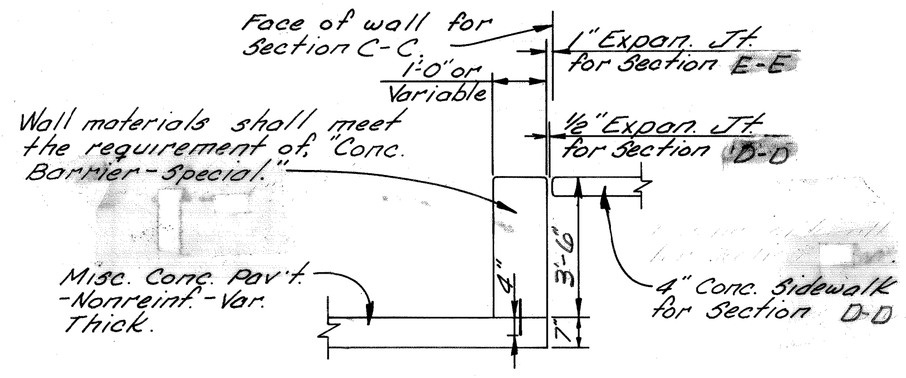

SECTION D-D AND SECTION E-E
NO SCALE

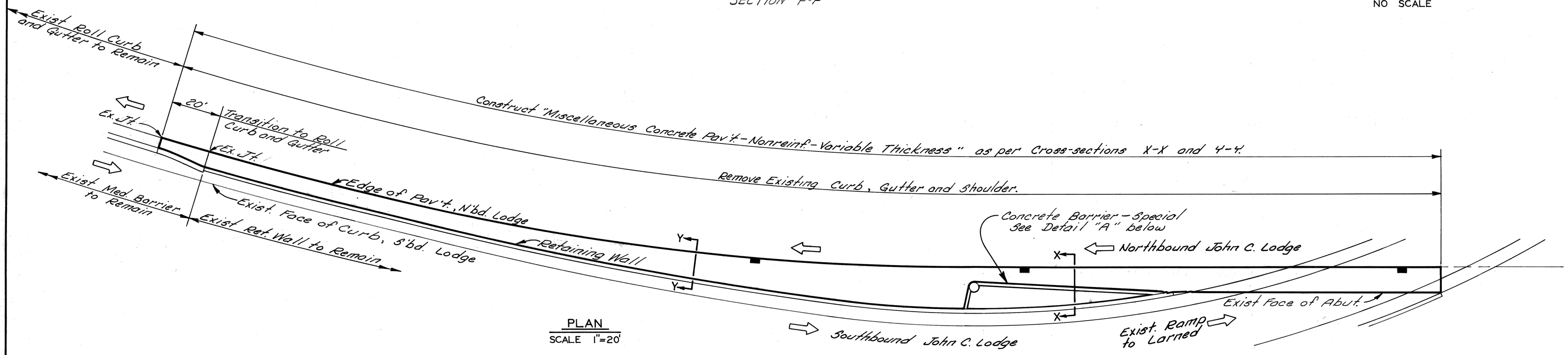

PLAN
SCALE 1"=20'

NOTES:

1. Remove the three catch Basin frames and covers shown by the symbol ■ above. Replace these with "Drainage Structure Cover (Type D)." See sheet #3.
2. For sections X-X and Y-Y, See Sheet #3.
3. Length, for pay item limits, of Concrete Barrier-Special

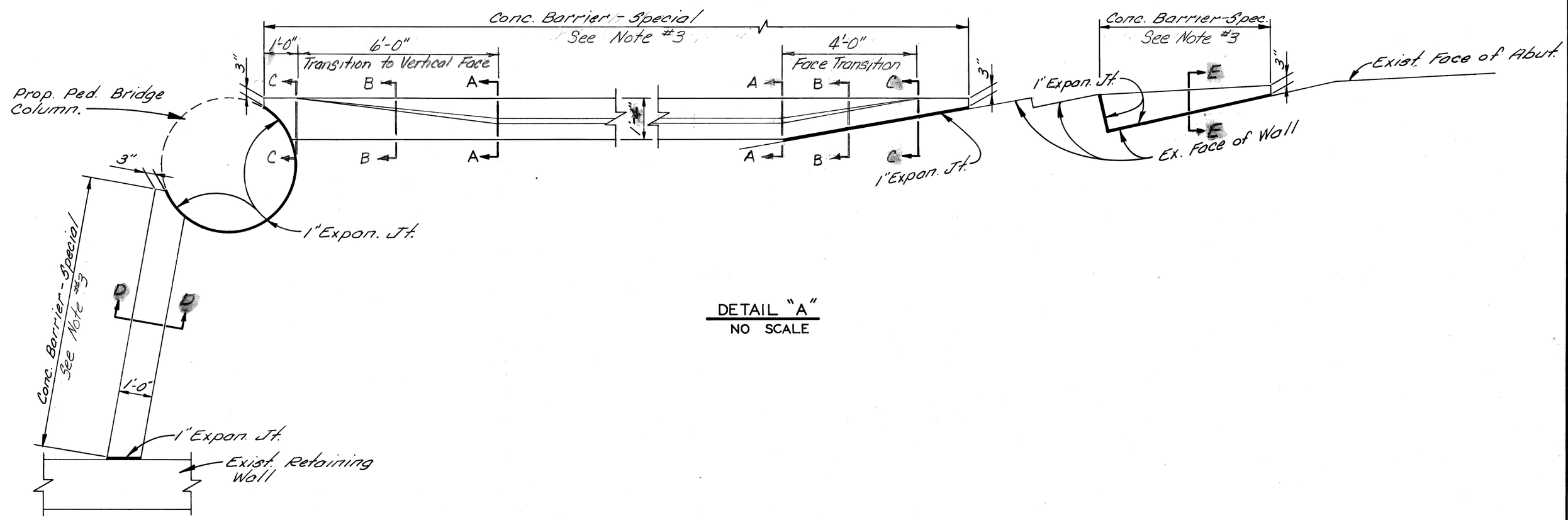

DETAIL "A"
NO SCALE

COOR'D	DESCRIPTION	DR'N	CK'D	AP'VD	DATE	REFERENCE DRAWINGS	DESIGNED BY		APPROVED:
							DRAWN BY	Sucech	ENGINEER OF STREETS
							TRACED BY		HIGHWAY ENGINEER
							CHECKED BY		

REVISIONS LOCATED BY COORDINATES ON SHEET

CITY OF DETROIT
CITY ENGINEERING DIVISION-EPMD
BUREAUS OF STREETS AND HIGHWAYS
FOR

JOE LOUIS ARENA PEDESTRIAN WALKWAYS

SHEET C-9 OF ___ SHEETS
CONTRACT NO. 15031A
ASSIGNMENT NO.
DATE 5-14-80

TSR 250 1-79 693994

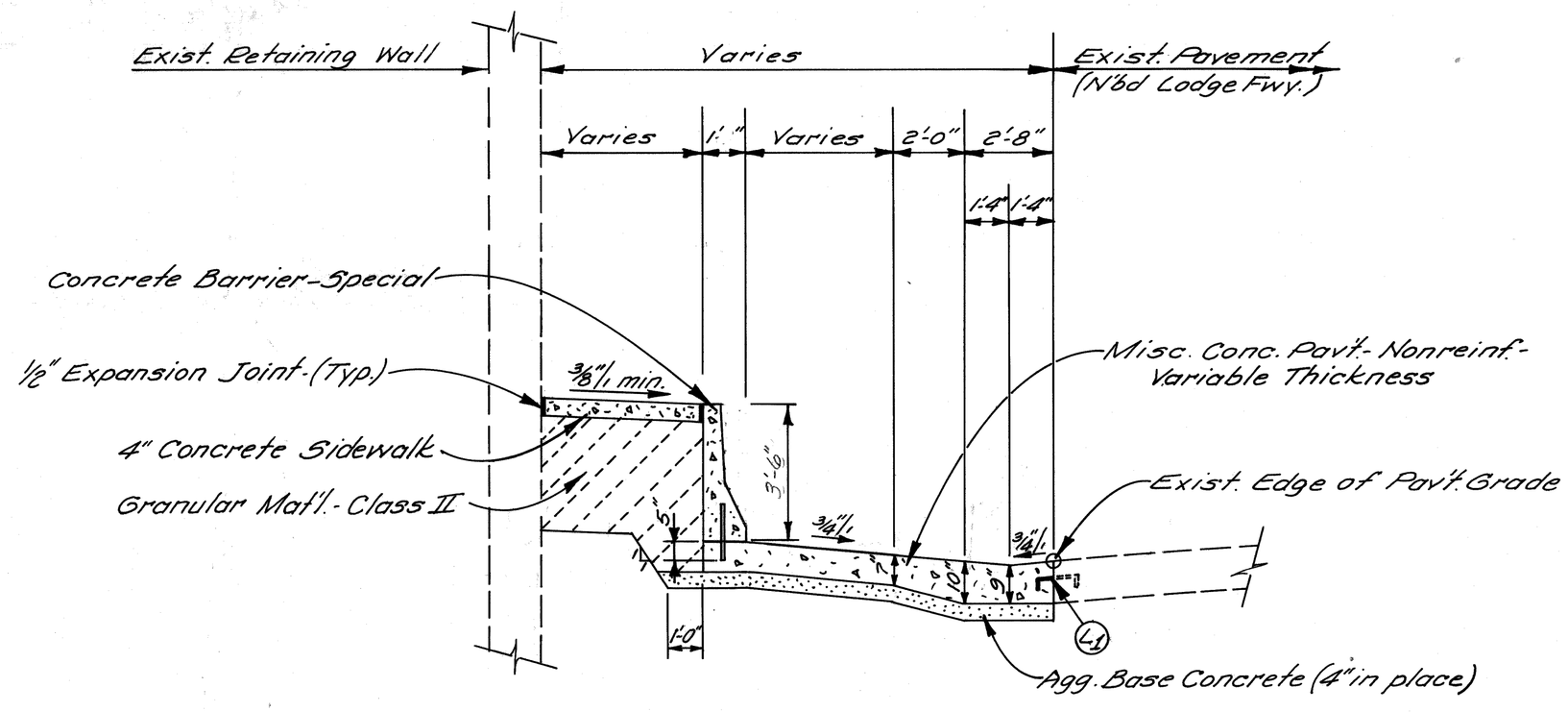

SECTION X-X

NO SCALE

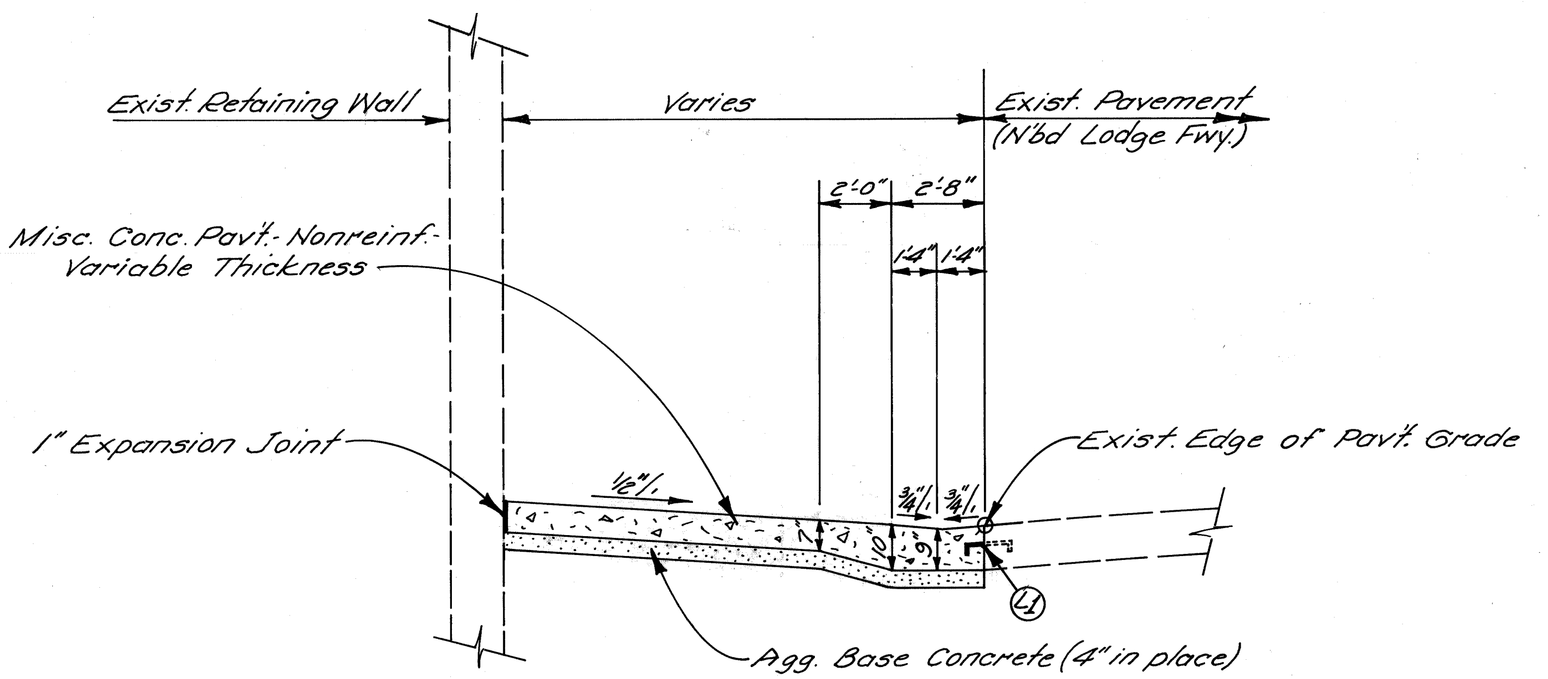

SECTION Y-Y

NO SCALE

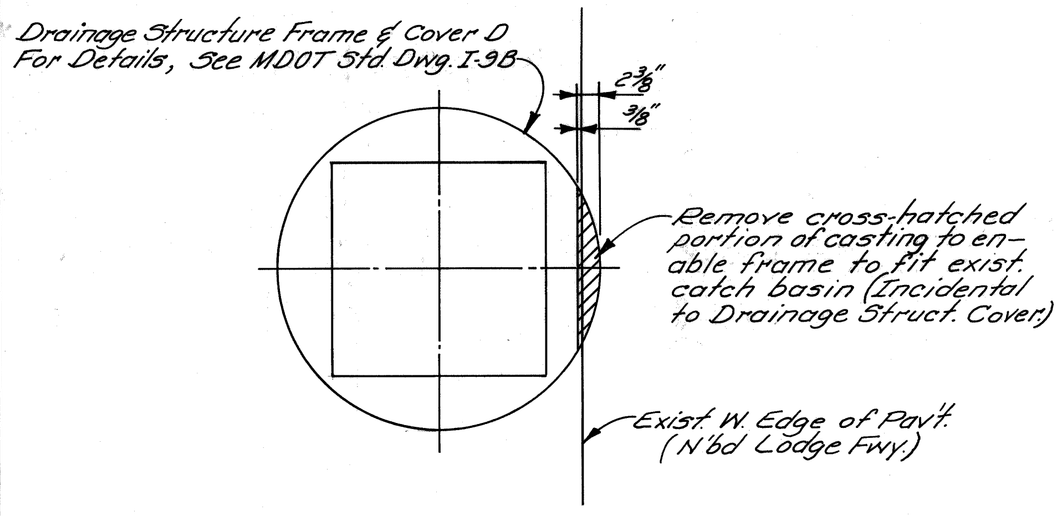

DRAINAGE STRUCTURE COVER

NO SCALE

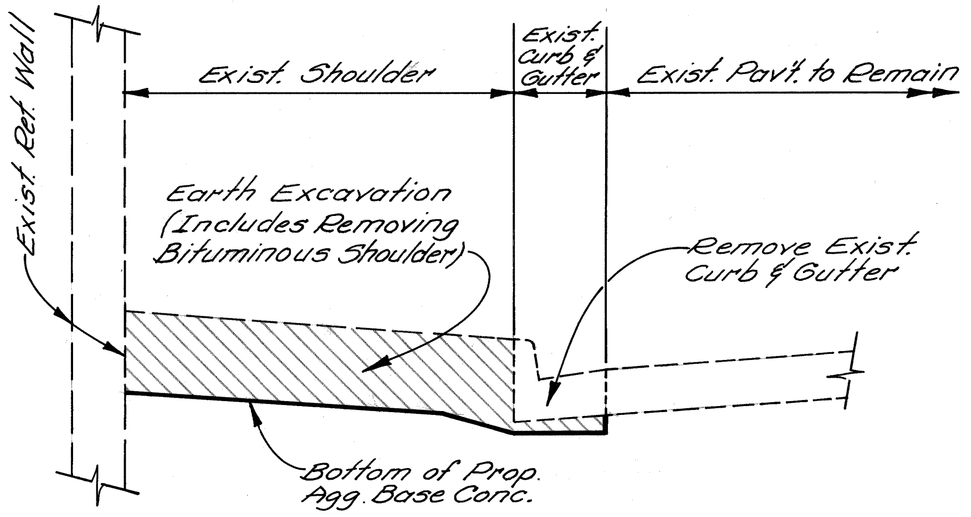

EXCAVATION & REMOVAL SECTION

NO SCALE

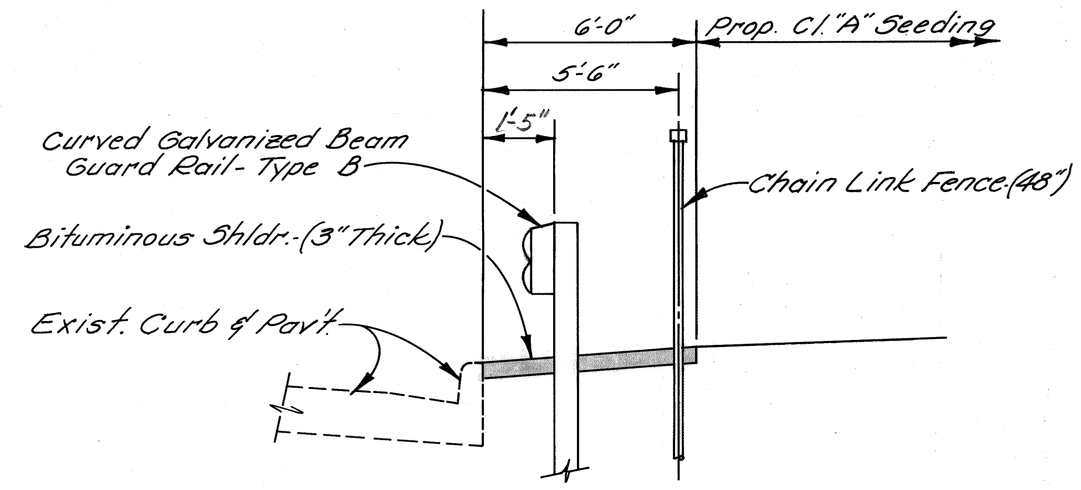

SECTION Z-Z

NO SCALE

NOTES:

1. It is estimated that 50% of the existing lane ties can be preserved in the areas where (4) Longitudinal Bulkhead Joints are called for. Additional hook bolts shall be placed where the existing coupling can be re-tapped and used. The additional care required to preserve the existing lane ties and the additional hook bolts required for the (4) Joint will be included in the pay item "Misc. Conc. Pavt.-Nonreinf.-Variable Thickness." Expansion Anchors will not be required for this joint.

COOR'D	DESCRIPTION	DR'N	CK'D	AP'VD	DATE
REVISIONS LOCATED BY COORDINATES ON SHEET					

REFERENCE DRAWINGS

DESIGNED BY

DRAWN BY MAP

TRACED BY

CHECKED BY

APPROVED:

ENGINEER OF STREETS

HIGHWAY ENGINEER

CITY OF DETROIT
CITY ENGINEERING DIVISION-EPMD
BUREAUS OF STREETS AND HIGHWAYS

JOE LOUIS ARENA PEDESTRIAN WALKWAYS

N'BD LODGE FWY. SHOULDER DETAILS

SHEET C-10 OF ____ SHEETS

CONTRACT NO. 15031A

ASSIGNMENT NO.

DATE 5-14-80

MC/PRM# 71858

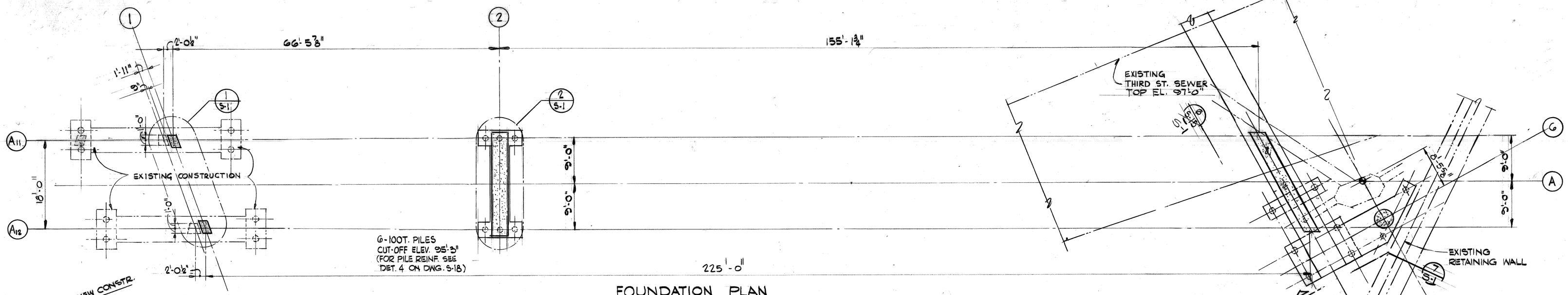

FOUNDATION PLAN
3/32" = 1'-0"

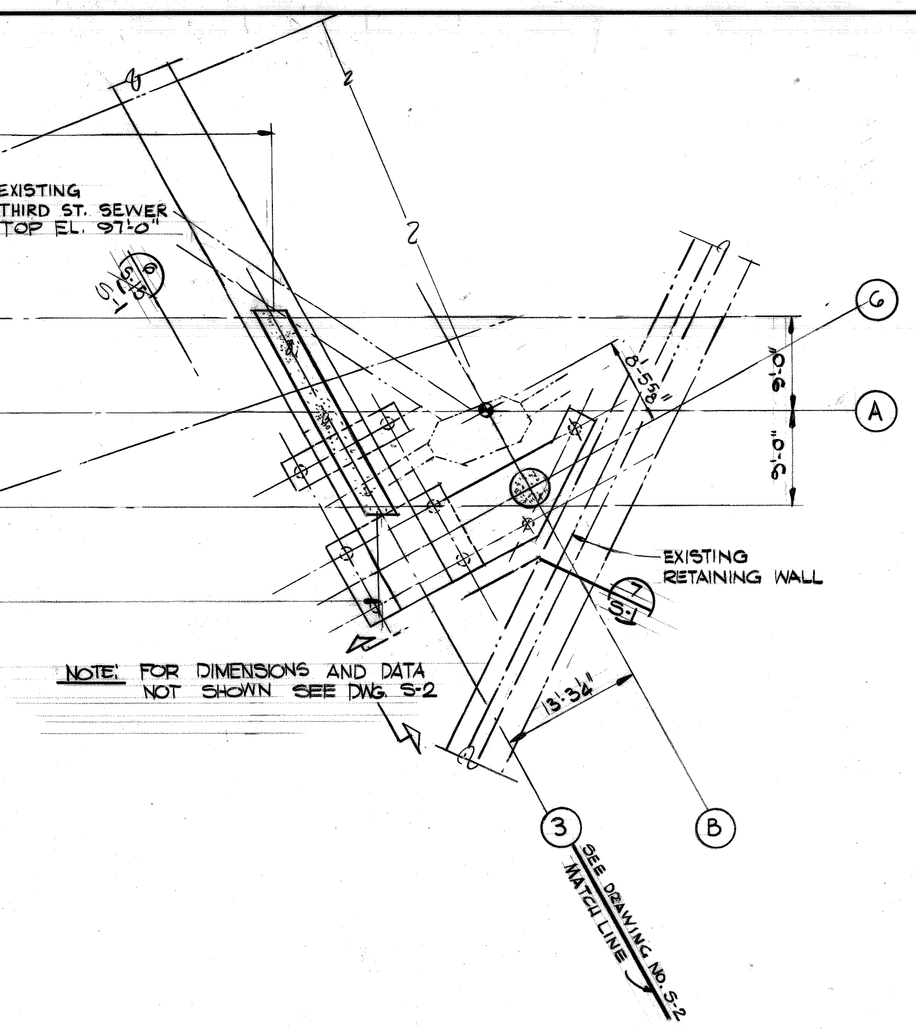

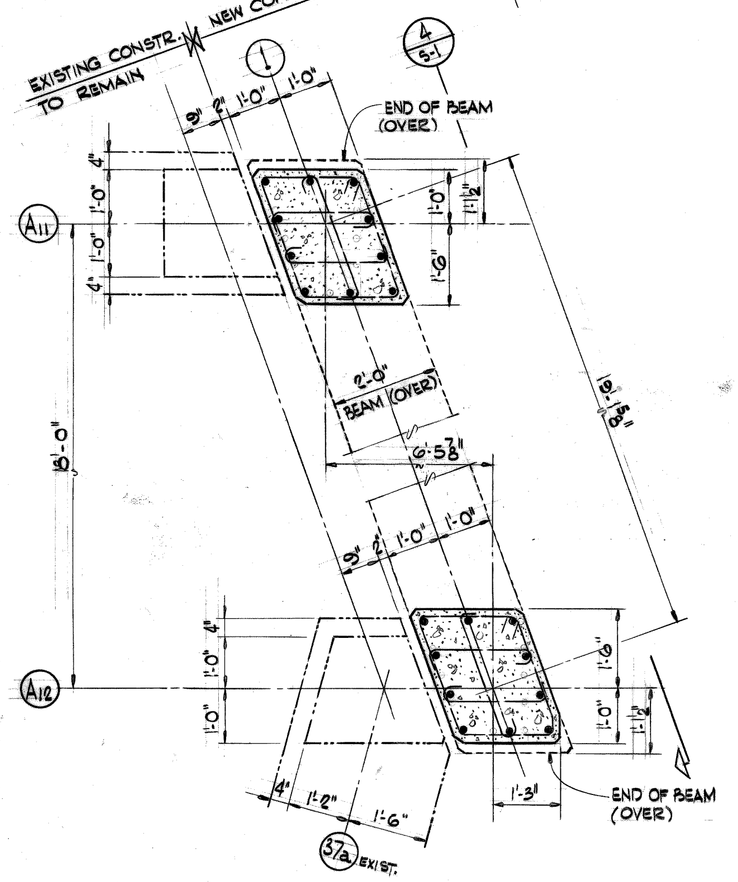

1 / 5-1 1/2" = 1'-0"

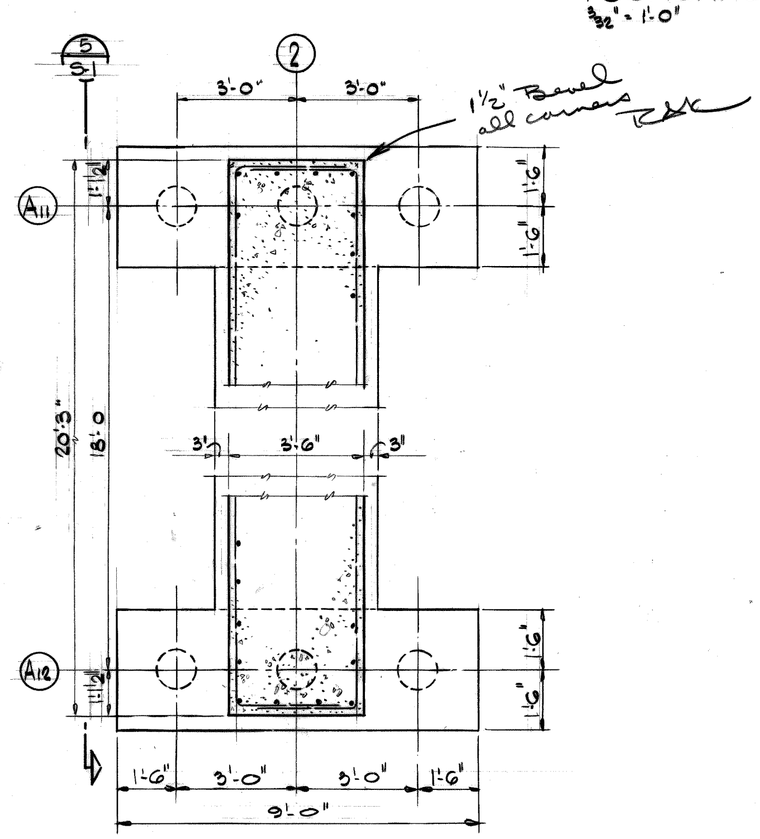

2 / 5-1 3/8" = 1'-0"

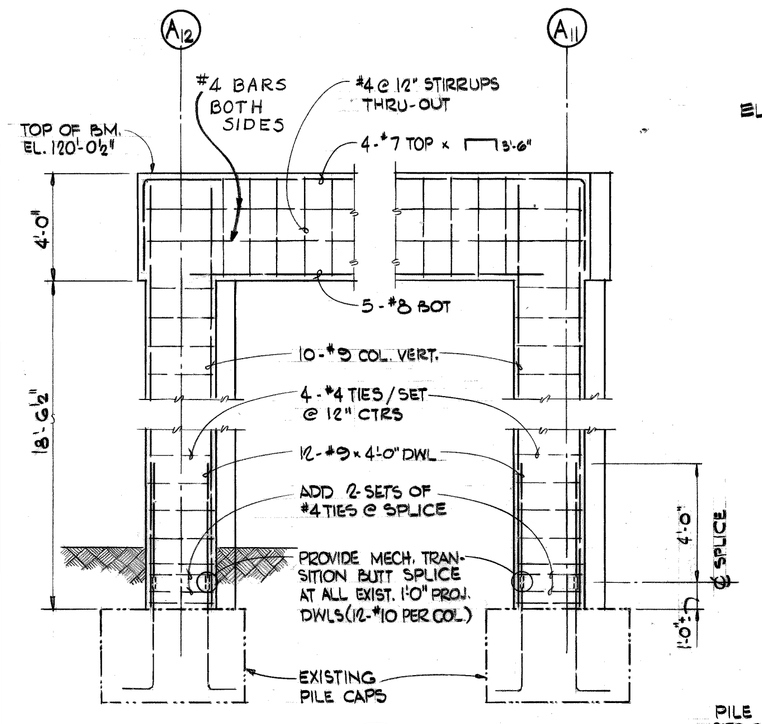

4 / S-1 1/4" = 1'-0"

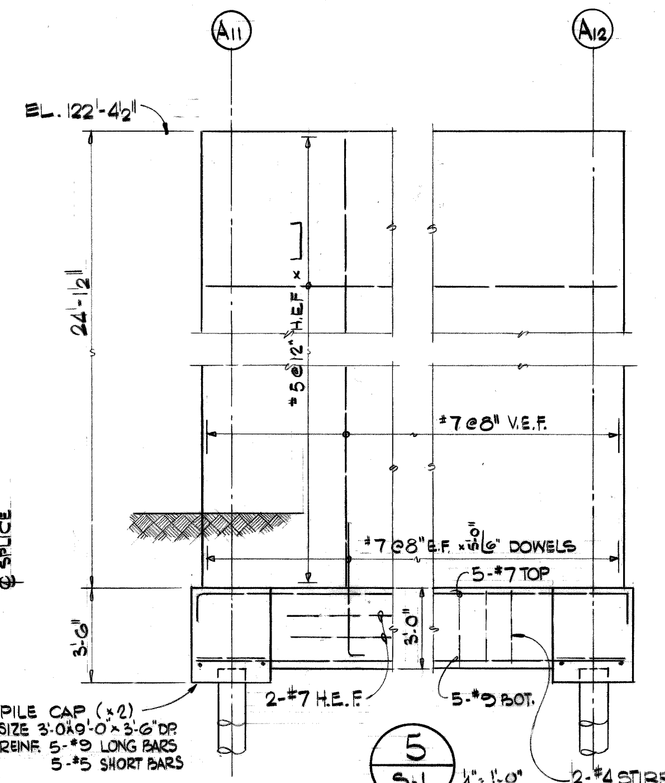

5 / S-1 1/4" = 1'-0"

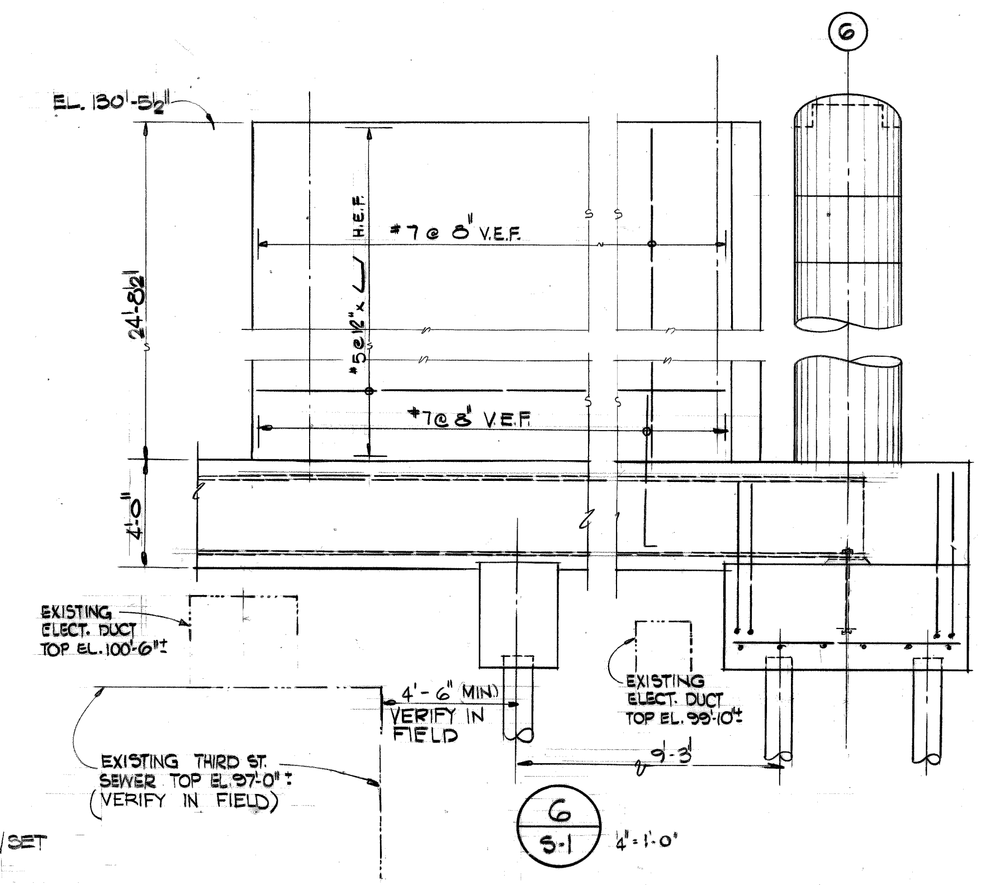

6 / S-1 1/4" = 1'-0"

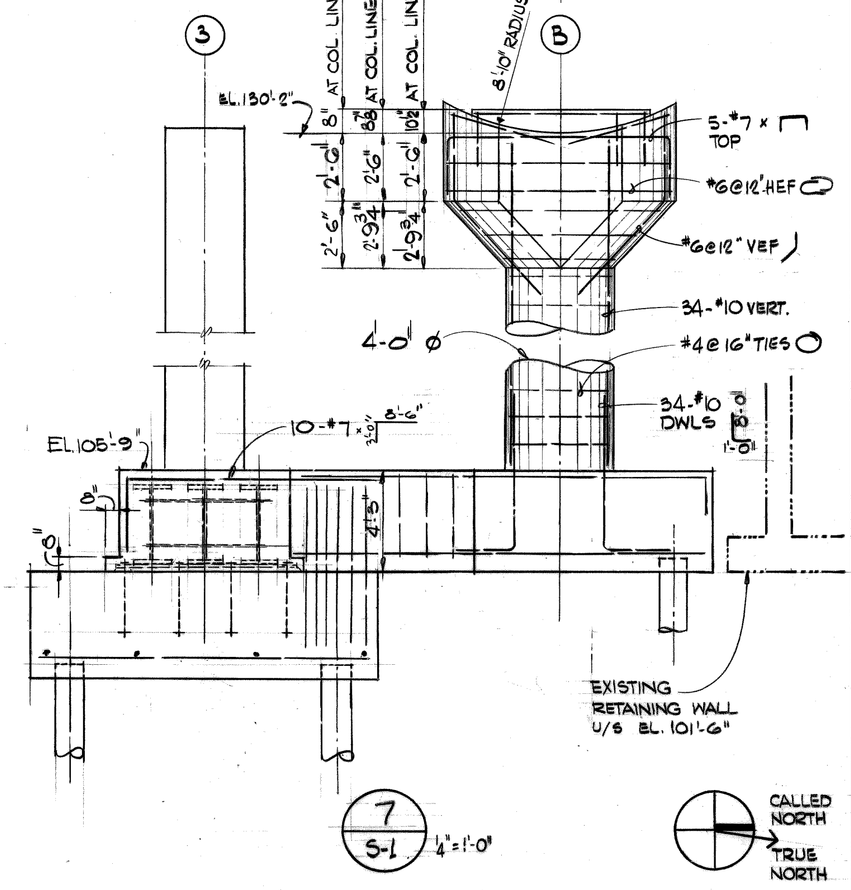

7 / S-1 1/4" = 1'-0"

NOTES:
1. PILE CUT-OFF ELEVATION SEE PLAN
2. PILE LENGTH FOR BID PURPOSES:
95' FOR 100 TON PILES
100' FOR 200 TON PILES.

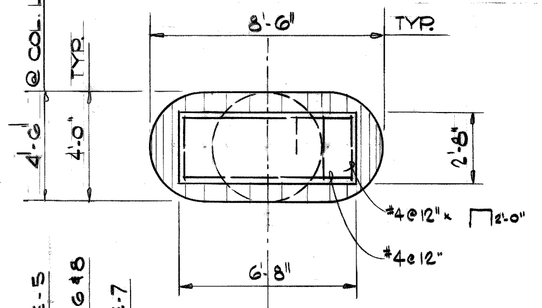

CALLED NORTH
TRUE NORTH

Joe Louis Sports Arena
Pedestrian Walkway
For City Engineering Division

SH&G
Smith, Hinchman & Grylls Associates, Inc.
Architects Engineers Planners
455 West Fort Street
Detroit, Michigan 48226
(313)964-3000

SH&G Job. No. 11732C

OWNER	5-30-80
Issued For	Date
1-18-80	C.A.B.
Date	Drawn By
	Checked By
Prin. Architect/Engineer	
Correlation Check	
Project Manager	
Construction Administrative Div. Approval	
Division Approval	

Key Plan

Detail Number / Location or Detail Sheet

N

Drawing Title
NORTH-SOUTH BRIDGE FOUNDATION PLAN

15031A
Project No.
S-1
Drawing No.
3/32" = 1'-0" U.O.N.
Scale

9-26-79

MC/PRM# 71858

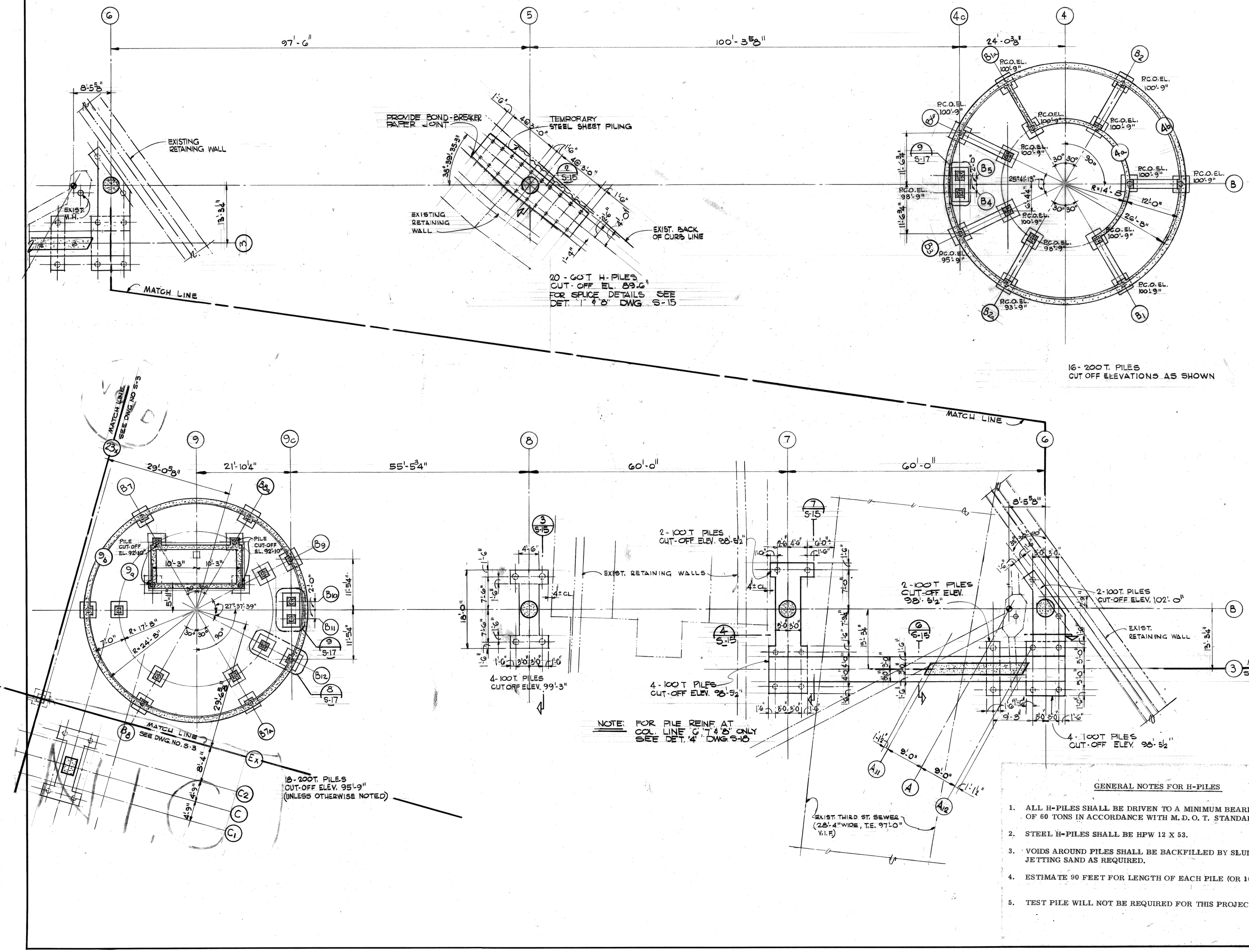

GENERAL NOTES FOR H-PILES

1. ALL H-PILES SHALL BE DRIVEN TO A MINIMUM BEARING CAPACITY OF 60 TONS IN ACCORDANCE WITH M.D.O.T. STANDARD SPECIFICATIONS.
2. STEEL H-PILES SHALL BE HPW 12 X 53.
3. VOIDS AROUND PILES SHALL BE BACKFILLED BY SLUICING AND/OR JETTING SAND AS REQUIRED.
4. ESTIMATE 90 FEET FOR LENGTH OF EACH PILE (OR 1620' TOTAL).
5. TEST PILE WILL NOT BE REQUIRED FOR THIS PROJECT.

CALLED NORTH — TRUE NORTH

Joe Louis Sports Arena

Pedestrian Walkway

For City Engineering Division

SH&G
Smith, Hinchman & Grylls Associates, Inc.
Architects Engineers Planners
455 West Fort Street
Detroit, Michigan 48226
(313)964-3000
SH&G Job. No. 11732C

OWNER	5-30-80
Issued For	Date
1-18-80	
Date	Drawn By
Div. Architect/Engineer	
Correlation Check	
Project Manager	
Construction Administration Div. Approval	
Division Approval	

Key Plan

Detail Number / Location or Detail Sheet

N

Drawing Title

EAST - WEST BRIDGE AND TOWERS FOUNDATION PLAN

15031A
Project No.

S-2
Drawing No.

3/32" = 1'-0"
Scale

9-26-79

MC/PRM# 71858

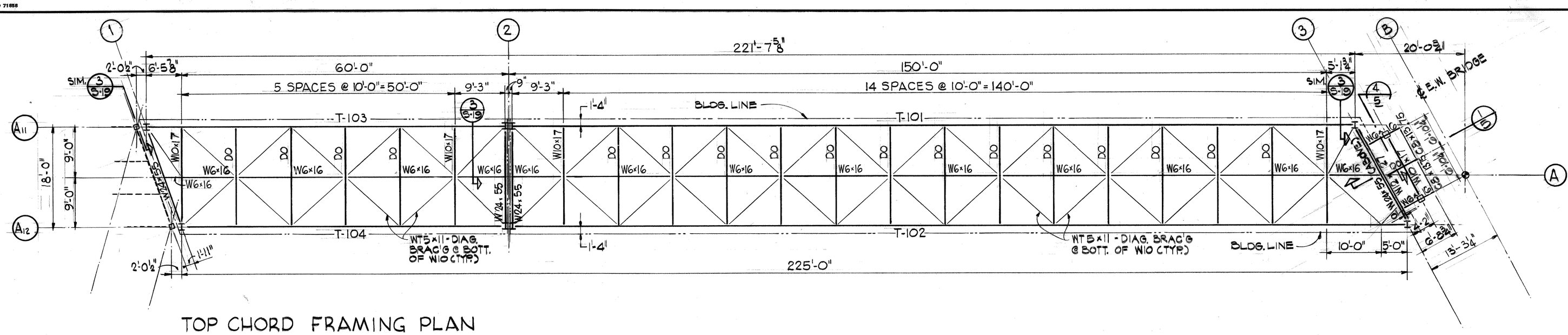

TOP CHORD FRAMING PLAN

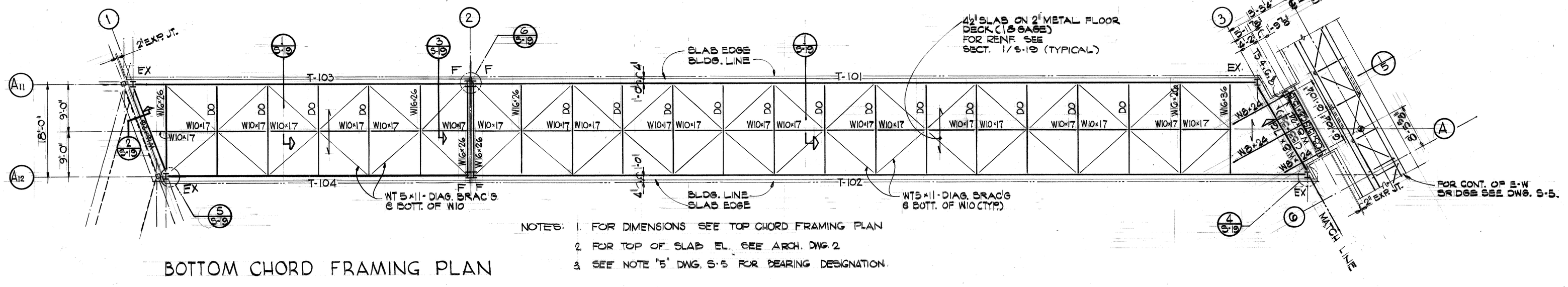

BOTTOM CHORD FRAMING PLAN

NOTES:
1. FOR DIMENSIONS SEE TOP CHORD FRAMING PLAN
2. FOR TOP OF SLAB EL. SEE ARCH. DWG. 2
3. SEE NOTE "5" DWG. S-5 FOR BEARING DESIGNATION.

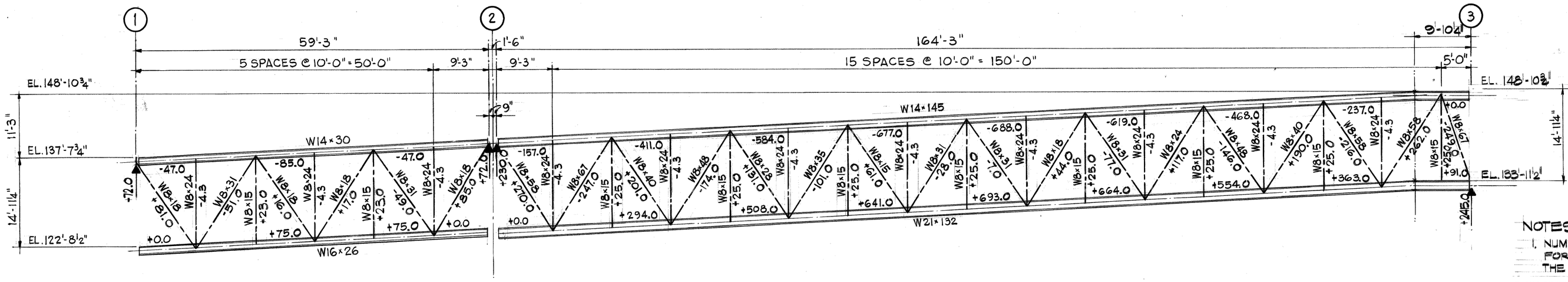

TRUSS T-104 TRUSS T-102

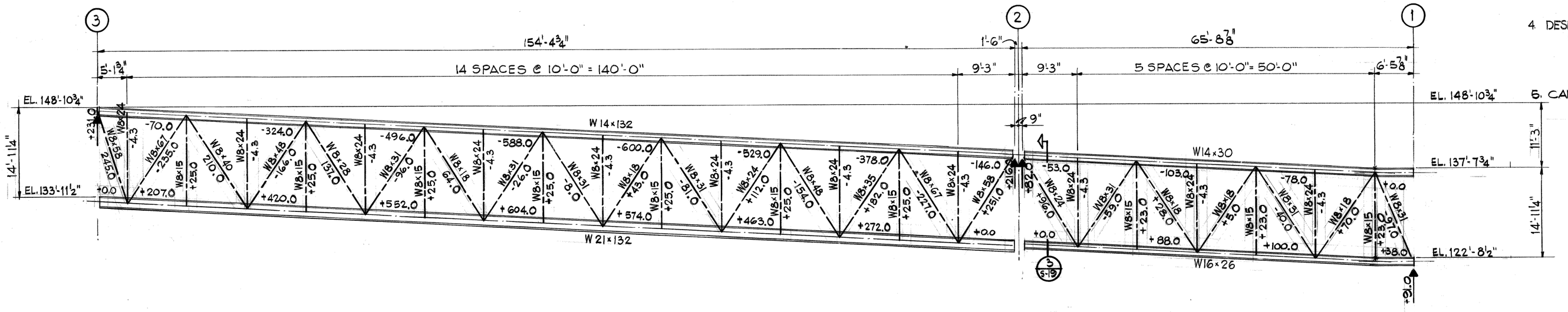

TRUSS T-101 TRUSS T-103

NOTES:
1. NUMBER BELOW MEMBER SIZES ARE MEMBER FORCES (+) IN TENSION, (-) IN COMPRESSION. THE UNIT IS IN KIPS.
2. DESIGN LIVE LOAD = 100 PS.F. FLOOR
   30 PS.F. ROOF
3. DESIGNATION OF BEARING TYPE ON PLAN:
   F = FIXED BEARING
   EX = EXPANSION BEARING
4. DESIGN WIND LOAD:
   (a) SUPERSTRUCTURE
   LATERAL = 50 PSF
   LONGITUDINAL = 12 PSF
   (b) SUBSTRUCTURE = 40 PSF
5. CAMBER FOR TRUSS
   T-101 & T-102 = 2" @ 80'-0" FROM LINE "2"
   T-103 & T-104 = 1" @ 50'-0" FROM LINE "2"

Joe Louis Sports Arena
Pedestrian Walkway
For City Engineering Division

SH&G
Smith, Hinchman & Grylls Associates, Inc.
Architects Engineers Planners
455 West Fort Street
Detroit, Michigan 48226
(313)964-3000

SH&G Job. No. 11732C

OWNER — Issued For — 5-30-80 Date

1-18-80 Date — Drawn By

Div. Architect/Engineer

Correlation Check

Project Manager

Construction Administrative Div. Approval

Division Approval

Key Plan

Detail Number / Location or Detail Sheet.

N

Drawing Title
NORTH-SOUTH BRIDGE FLOOR AND ROOF FRAMING PLAN

15031A
Project No.

S-4
Drawing No.

3/32" = 1'-0"
Scale

45 OF 96

9-26-79

MC/Prints 71888

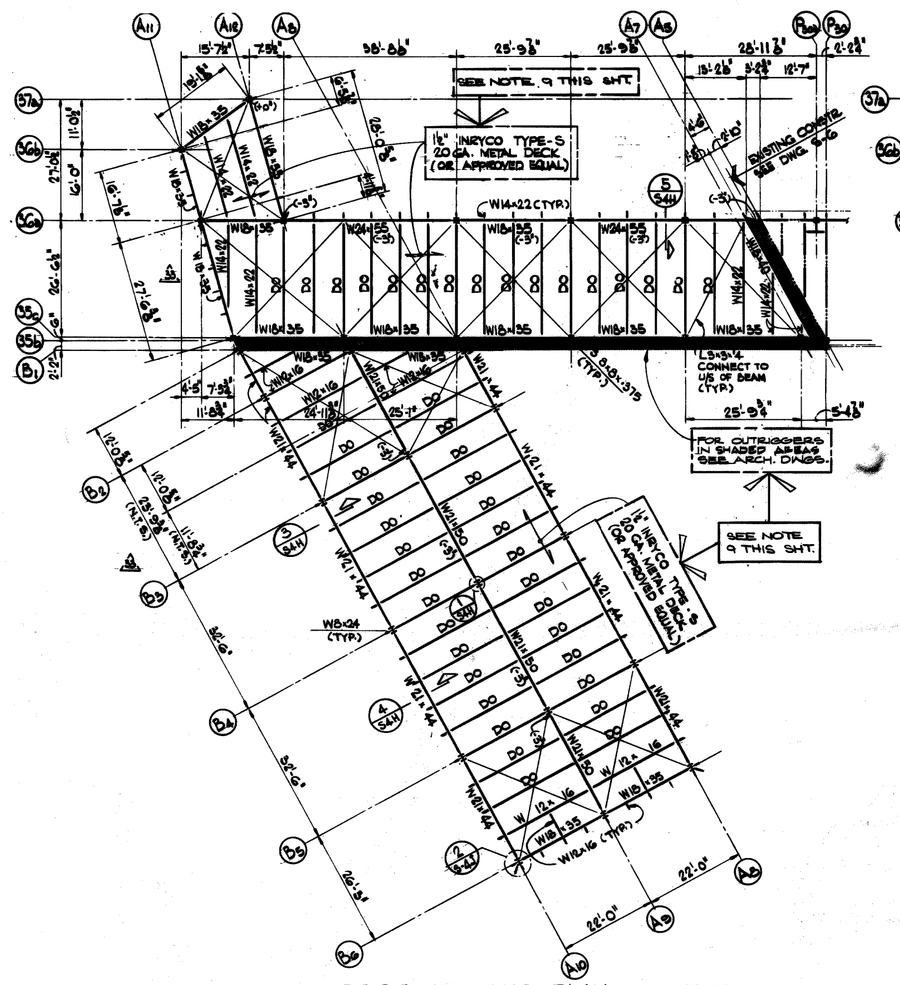

ROOF FRAMING PLAN 1"=24'-0"

NOTES: 1. T.O.S. EL. 135'-2" U.O.N. THUS (T.O")

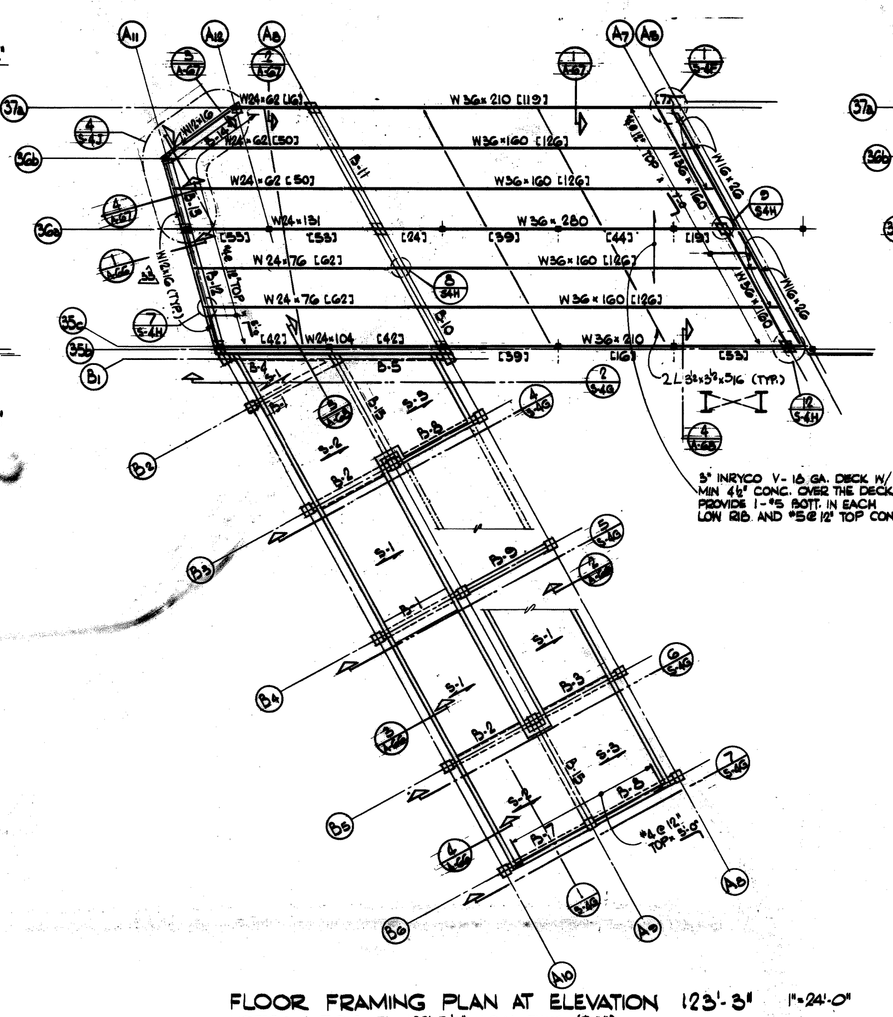

FLOOR FRAMING PLAN AT ELEVATION 123'-8" 1"=24'-0"

NOTES: 1. T.O.S. EL. 122-5½" U.O.N. THUS (T.O")
2. TOP OF SLAB ELEVATION VARIES SEE ARCH. DWGS.

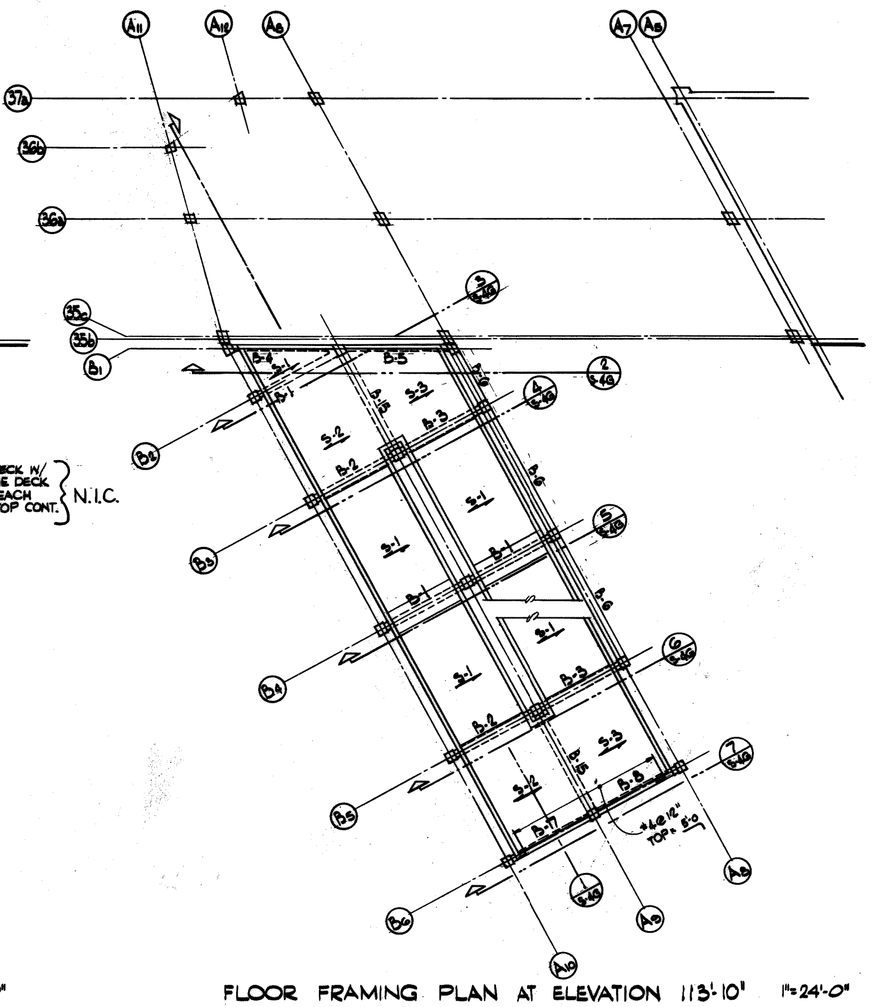

FLOOR FRAMING PLAN AT ELEVATION 113'-10" 1"=24'-0"

SLAB SCHEDULE

MARK	THICKNESS	MAIN REINFORCEMENT: TOP DIAG END	MAIN REINFORCEMENT: STRAIGHT BOTTOM	MAIN REINFORCEMENT: TOP EA. END	ARRG'NT.	TEMP. BARS	REMARKS
S-1	10		#5@9"	#5@12"		#4@10"	
S-2	10	#5@12"	#5@9"			#4@10"	ADD #5@5" TOP CONT. END & EXTEND INTO ADJ. SPAN.
S-3	10	#5@12"	#5@9"			#4@10"	

NOTE: DASH LINES IN "ARRANGEMENT" COLUMN DENOTE REINFORCEMENT FROM ADJACENT SPANS.

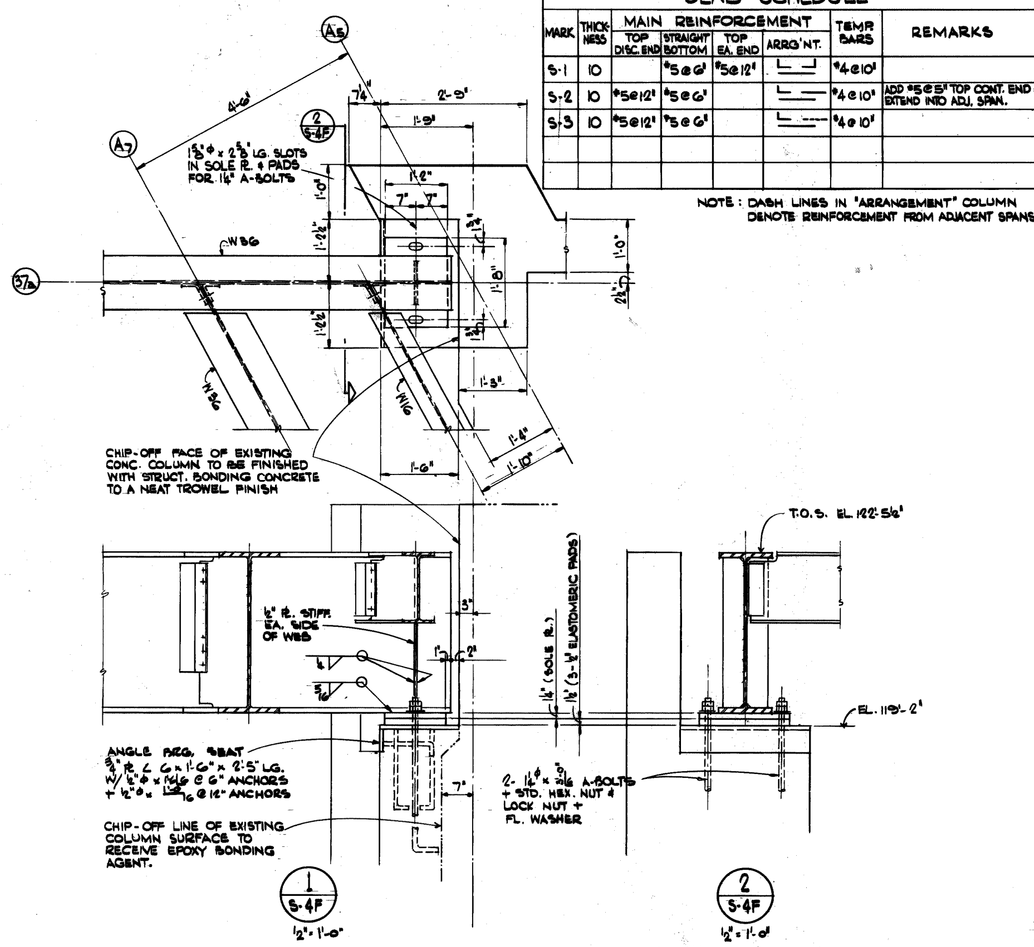

BEAM SCHEDULE

MARK	BEAM: SHAPE	BEAM: WIDTH	BEAM: DEPTH	REINFORCEMENT: TOP DIAG END	REINFORCEMENT: STRAIGHT BOTTOM	REINFORCEMENT: TOP EA. END	ARRG'NT	STIRRUPS THRU-OUT	REMARKS
B-1		18	30		4-#8	5-#8		#4@4"	
B-2		18	30	5-#8	4-#8			#4@4"	ADD 4-#8 TOP @ CONT. END & EXTEND INTO ADJ. SPAN.
B-3		18	30	5-#8	4-#8			#4@4"	
B-4		18	30	5-#8	4-#8			#4@4" (2)	ADD 4-#8 TOP CONT. & EXTEND INTO ADJ. SPAN
B-5		18	30	5-#8	4-#8			#4@4" (2)	
B-6		24	24	SEE DETAIL-25/S-4H				#3@12"	
B-7		18	30	5-#8	4-#8			#4@4"	ADD 4-#8 TOP @ CONT. END & EXTEND INTO ADJ. SPAN.
B-8		18	30	5-#8	4-#8			#4@4"	
B-9		18	20		4-#8	5-#8		#4@4" (2)	ADD 5-#8 TOP CONT. SEE DETAILS 26-27/S-4H
B-10		30	60	4-#8	6-#10			#4@4" (2)	ADD 8-#10 TOP @ CONT. END & EXTEND INTO ADJ. SPAN.
B-11		30	60	4-#8	6-#10			#4@4" (2)	
B-12		24	48	4-#8	6-#8			#4@8" (2)	ADD 6-#10 TOP @ CONT. END & EXTEND INTO ADJ. SPAN
B-13		24	48		6-#8			#4@8" (2)	
B-14		24	48	4-#8	6-#8			#4@8" (2)	ADD 6-#8 TOP @ CONT END
B-15		24	28		6-#10	5-#8		#4@8"	
B-16		24	18		6-#10	5-#8		#4@4"	ADD 4-#8 TOP CONT. SEE DETAILS 26-29/S-4H

NOTE: DASH LINES IN "ARRANGEMENT" COLUMN DENOTE REINFORCEMENT FROM ADJACENT SPANS.

GENERAL NOTES FOR STRUCTURAL STEEL CONTRACT

1. STRUCTURAL STEEL WORK SHALL COMPLY WITH THE SPECIFICATIONS FOR THE DESIGN FABRICATION AND ERECTION OF STRUCTURAL STEEL FOR BUILDINGS OF THE A.I.S.C. CURRENT EDITION.
2. ALL STRUCTURAL STEEL SHALL CONFORM TO A.S.T.M., A-36 CURRENT EDITION, STRUCTURAL STEEL FOR TUBE SECTION SHALL CONFORM TO A.S.T.M., A-501.
3. UNLESS OTHERWISE SHOWN OR NOTED, ALL SHOP CONNECTIONS SHALL BE WELDED. ALL FIELD CONNECTIONS SHALL BE WITH 3/4" DIAMETER HIGHSTRENGTH BOLTS, BEARING TYPE CONFORMING TO A.S.T.M., A-325X.
4. ALL STEEL EXCEPT FOR CANOPY STRUCTURE SHALL HAVE TWO HOUR RATED FIREPROOFING. SEE SPECIFICATION FOR FIREPROOFING MATERIALS.
5. ALL W-36 BEAMS SHALL HAVE A 3 1/2" UPWARD CHAMBER AT MIDPOINT OF THE LENGTH.
6. ELASTOMERIC BEARING PADS SHALL BE OF 50 DUROMETER HARDNESS CONFORMING TO THE REQUIREMENTS OF STANDARD SPECIFICATION FOR HIGHWAY BRIDGES, A.A.S.H.T.O., TWELFTH EDITION, SECTION 2.25.
7. NUMBERS IN ( ) ARE HEADED SHEAR STUDS, 3/4" DIAMETER X 6" LONG SPACED UNIFORMLY ON THE BEAM. HEADED SHEAR STUDS ARE NOT INCLUDED IN THIS CONTRACT.
8. FOR GENERAL NOTES FOR CONCRETE WORK SEE DWG. S-4J
9. MET ROOF DECK TO BE IN THIS CONTRACT. ALL OTHER ITEM ON THIS SHT TO BE N.I.C.

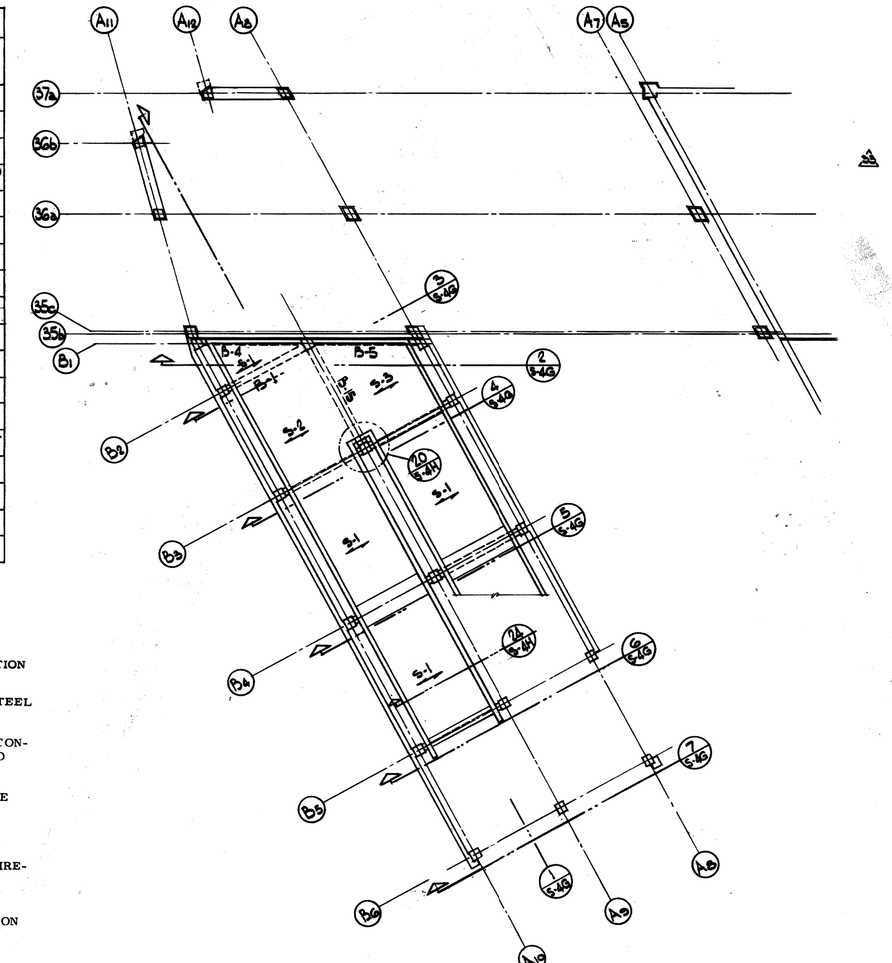

FLOOR FRAMING PLAN AT ELEVATION 104'-5"
1"=24'-0"

Joe Louis Sports Arena
Pedestrian Walkway
For City Engineering Division

SH&G
Smith, Hinchman & Grylls Associates, Inc.
Architects Engineers Planners
455 West Fort Street
Detroit, Michigan 48226
(313)964-3000

SH&G Job. No. 11732C

OWNER — Issued For: 5-30-80

10-2-79 — Date — N.R. Drawn By

Div. Architect/Engineer

Correlation Check

Project Manager

Construction Administrative Div. Approval

Division Approval

Key Plan

Detail Number / Location or Detail Sheet

N

Drawing Title
THIRD STREET BRIDGE AND RAMP FRAMING PLANS

15031A — Project No.

S-4F — Drawing No.

1"=24'-0" (U.O.N.) — Scale

46 OF 56

9-26-79

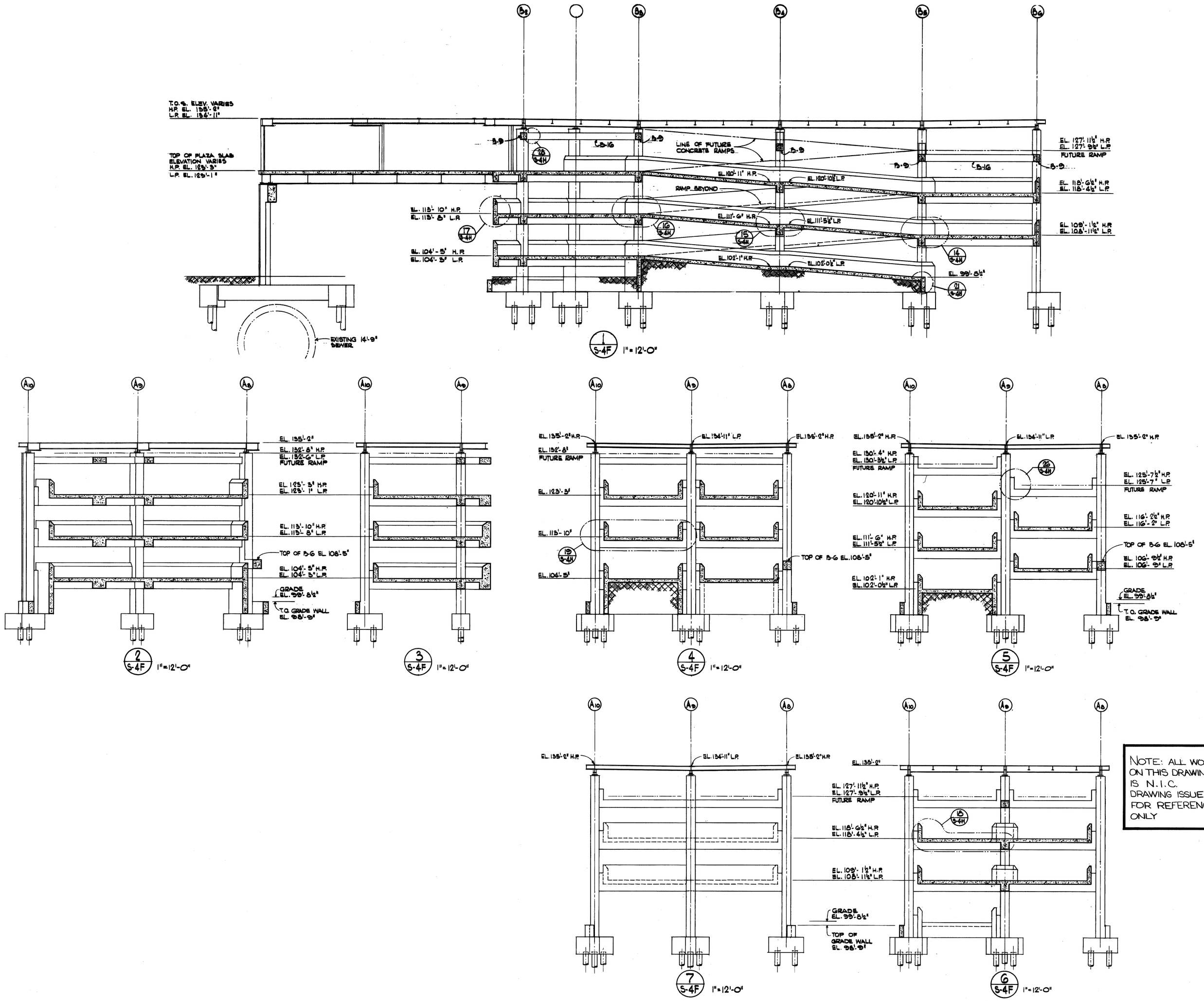

NOTE: ALL WORK ON THIS DRAWING IS N.I.C. DRAWING ISSUED FOR REFERENCE ONLY

Joe Louis Sports Arena
Pedestrian Walkway
For City Engineering Division

SH&G
Smith, Hinchman & Grylls Associates, Inc.
Architects Engineers Planners
455 West Fort Street
Detroit, Michigan 48226
(313)964-3000

SH&G Job. No. 11732C

OWNER (REF. ONLY) 5-30-80
Issued For Date

10-2-79 N.R.
Date Drawn By
Div. Architect/Engineer
Correlation Check
Project Manager
Construction Administrative Div. Approval
Division Approval

Key Plan

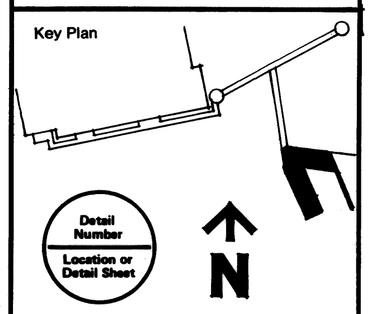

Drawing Title
THIRD STREET BRIDGE AND RAMP SECTIONS

15031A
Project No.
S-4G
Drawing No.
1"=12'-0"
Scale

9-26-79

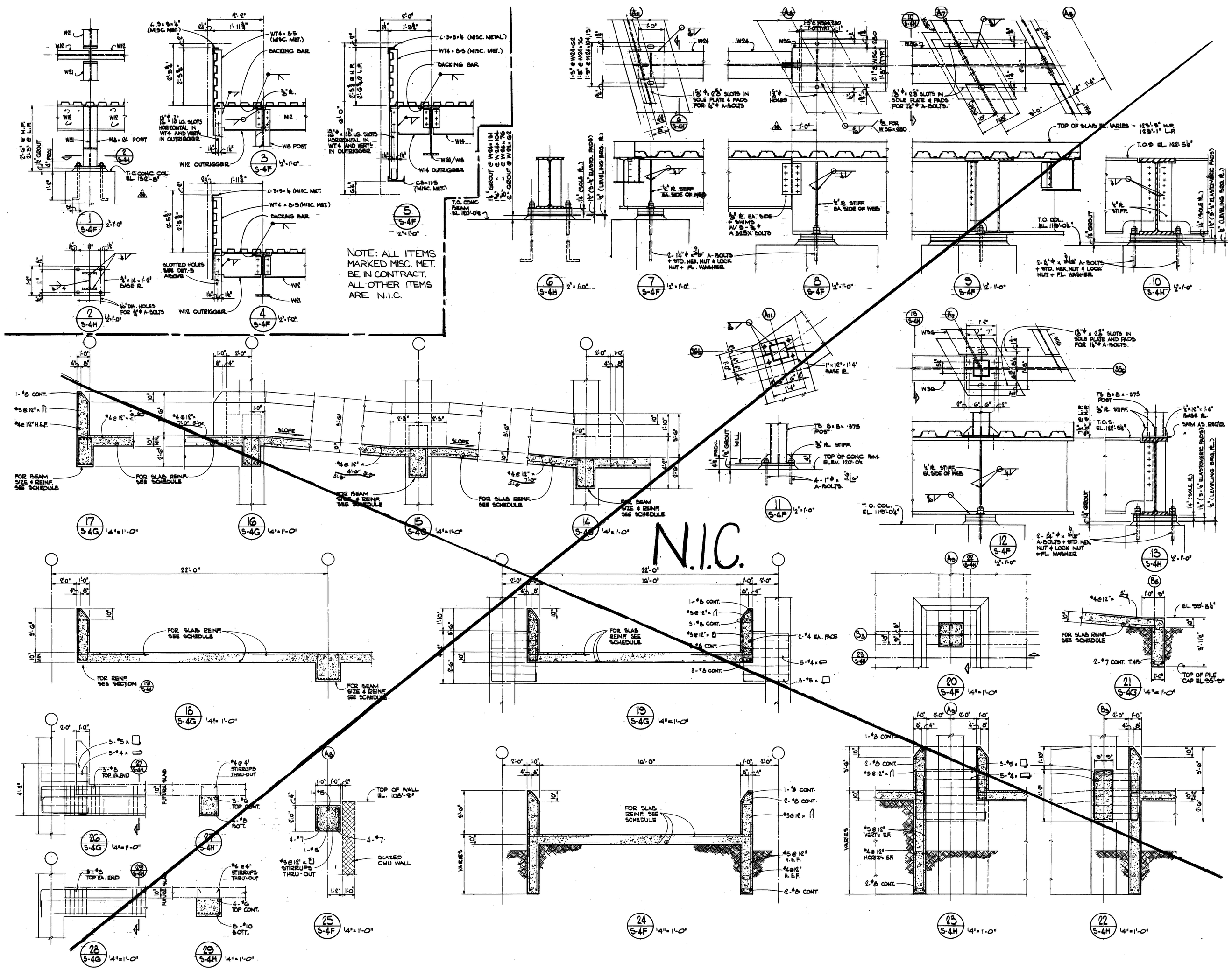

Joe Louis Sports Arena
Pedestrian Walkway
For City Engineering Division

SH&G
Smith, Hinchman & Grylls Associates, Inc.
Architects Engineers Planners
455 West Fort Street
Detroit, Michigan 48226
(313)964-3000

SH&G Job. No. 11732C

OWNER	5-30-80
Issued For	Date
10-2-79	N.R.
Date	Drawn By

Div. Architect/Engineer
Correlation Check
Project Manager
Construction Administrative Div. Approval
Division Approval

Key Plan

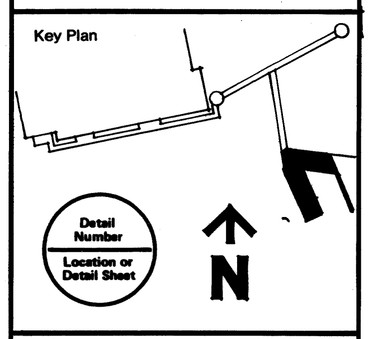

Drawing Title
THIRD STREET BRIDGE AND RAMP DETAILS

15031A
Project No.
S-4H
Drawing No.
1/4" = 1'-0" (U.O.N.)
Scale

48 OF 96

9-26-79

MC/Prime 71858

COLUMN SCHEDULE

COLUMN NUMBER	A7 - 35c	A7 - 36a A8 - 36a	A8 - 35c	A11 - 35c	A11 - 36a	A11 - 36b	A12 - 37a	A8 - 37a	A8 - 37b	A8 - B1 A9 - B1	A10 - B1	A10 - B2 A8 - B3 A9 - B4 A10 - B5 A8 - B5	A9 - B3 A10 - B3 A9 - B5 A10 - B4 A9 - B6 A6 - B6 A5 - B6 A10 - B6	
SIZE	SEE DETAIL 1/S-4E	SEE DETAILS 2, 17/S-4E	SEE DETAIL 12/S-4E	SEE DETAIL 10/S-4E	SEE DETAIL 6/S-4E	SEE DETAIL 6/S-4E	SEE DETAIL 5/S-4E	SEE DETAIL 4/S-4E	SEE DETAIL 5/S-4E	SEE DETAILS 12, 11/S-4E	SEE DETAIL 10/S-4E	24" x 24"	24" x 24"	
VERTICAL REINF	10-#9	10-#10	10-#9	10-#9	8-#9	8-#9	9-#9	10-#9	15-#8	8-#10	8-#10	8-#9	8-#10	
TIES	#3@12"	#3@12"	#3@12"	#3@12"	#3@12"	#3@12"	#3@12"	#3@12"	#3@12"	#3@9"	#3@9"	#3@9"	#3@9"	
DOWELS FROM PILE CAP	10-#9	10-#10	10-#9	10-#9	8-#9	8-#9	9-#9	10-#9	15-#8	8-#10	8-#10	8-#9	8-#10	
REMARKS	SEE NOTE-1	SEE NOTE-1	SEE NOTE-1	SEE NOTE-1	SEE NOTE-1	SEE NOTE-1	SEE NOTE-1	SEE NOTE-1	SEE NOTE-1	SEE NOTE-2	SEE NOTE-2	SEE NOTE-2	SEE NOTE-2	

N.I.C

NOTES:
1. FOR A DISTANCE OF 2'-0" ABOVE PILE CAPS AND 2'-0" BELOW BOTTOM OF BEAMS PROVIDE #3 TIES @ 6", REMAINING TIES SHALL BE AS SHOWN IN SCHEDULE.
2. PROVIDE 1" ø PLAIN BARS + COUPLING AND STANDARD BOLT PER DETAIL-1/S-4J (QUANTITY TO MATCH NUMBER OF VERTICAL REINF. BARS SHOWN IN SCHEDULE) FOR FUTURE COLUMN EXTENSION.

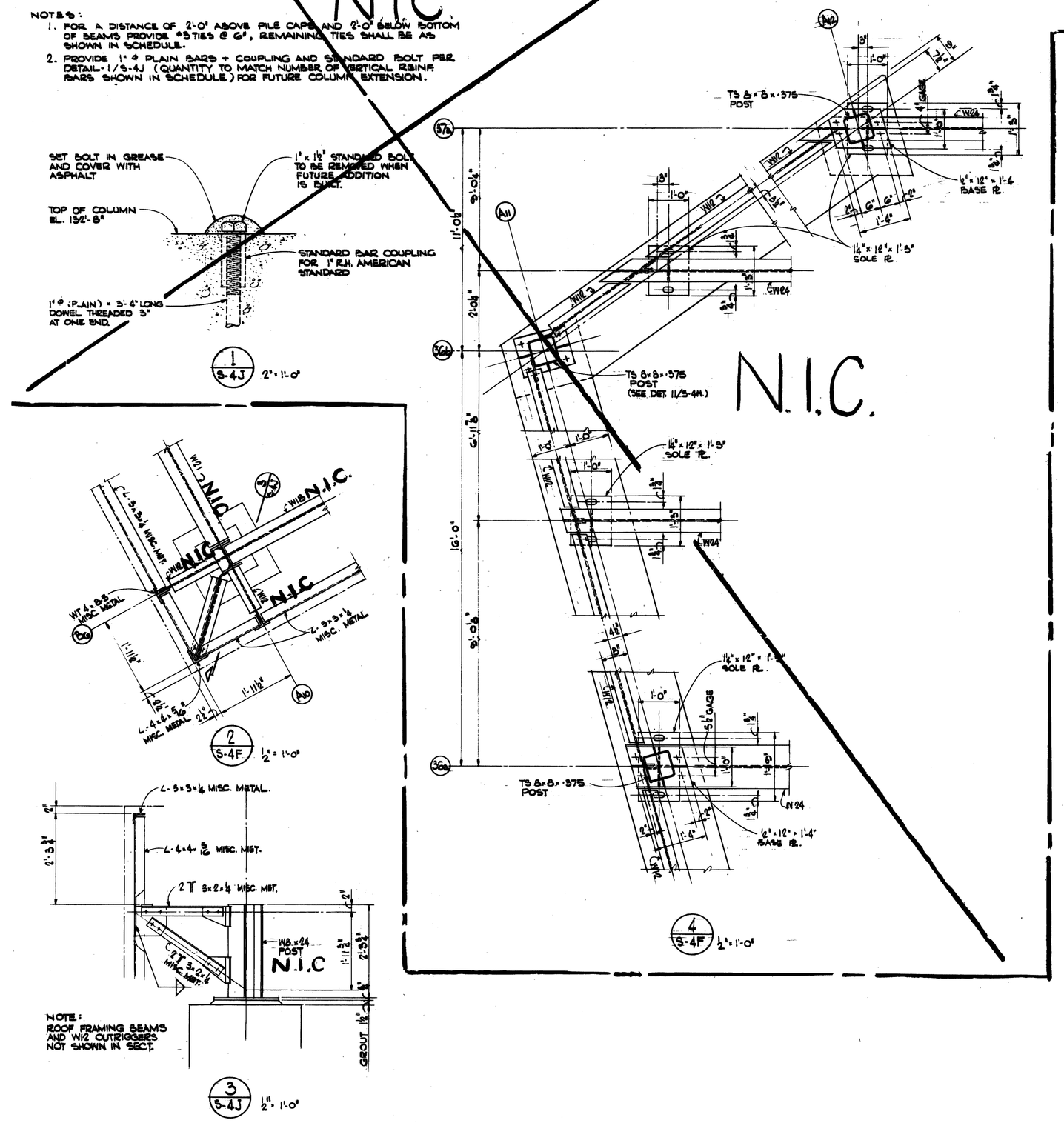

NOTE:
ROOF FRAMING BEAMS AND W12 OUTRIGGERS NOT SHOWN IN SECT.

GENERAL NOTES FOR CONCRETE WORK

1. STRUCTURAL STEEL WORK IS ISSUED UNDER ANOTHER CONTRACT. METAL DECK AND STUDS ARE INCLUDED IN THIS CONTRACT.
2. DESIGN LIVE LOADS ARE AS FOLLOWS:

ROOF	30 PSF
RAMP, FLOOR & BRIDGE	100 PSF

3. ALL CONCRETE SHALL HAVE MINIMUM COMPRESSIVE STRENGTH OF 4,000 PSI IN 28 DAYS.
4. ALL BAR REINFORCEMENT SHALL BE DEFORMED WITH MINIMUM YIELD STRENGTH AS FOLLOWS:

TIES, STIRRUPS AND RE-BAR FOR SLAB ON GROUND	40,000 PSI
ALL OTHER BARS	60,000 PSI

   TIES AND STIRRUPS SHALL BE BILLET STEEL CONFORMING WITH ASTM A615-40.
5. ALL HORIZONTAL BARS IN CONCRETE WALLS SHALL BE CONTINUOUS AND BENT AT ALL CORNERS AND INTERSECTIONS. SEPARATE CORNER BARS OF THE SAME SIZE AND SPACING MAY BE SUBSTITUTES FOR THE BENT BARS. SPLICES COMPLY WITH ACI 318, SECTION 12.16, CLASS "A".
6. TOP AND BOTTOM BARS FOR GRADE BEAMS SHALL BE OF MAXIMUM OBTAINABLE LENGTHS. SPLICES SHALL BE LOCATED AT MID-SPAN FOR TOP BARS AND AT SUPPORTS FOR BOTTOM BARS, COMPLYING WITH ACI 318, SECTION 12.16, CLASS "B".
7. UNLESS OTHERWISE SHOWN OR NOTED, PROVIDE TWO #5 BARS (ONE EACH FACE) AROUND UNFRAMED OPENINGS IN CONCRETE WALLS AND SLABS. PLACE BARS PARALLEL TO SIDES OF OPENINGS AND EXTEND THEM 24 INCHES BEYOND CORNERS.
8. REINFORCEMENT NOTED ON PLANS AND SECTIONS IS ADDITIONAL TO THAT CALLED FOR IN THE SCHEDULES.
9. COLUMNS SHALL BE POURED MONOLITHIC WITH CONNECTING WALLS AND DOWELED TO THE FOOTINGS AS NOTED IN THE COLUMN SCHEDULE. CONCRETE WALLS RESTING PARTIALLY ON COLUMN FOOTINGS SHALL BE KEYED, BUT NOT DOWELED, TO THE FOOTINGS.
10. UNLESS OTHERWISE SHOWN OR NOTED, DIMENSIONS ARE ROUGH CONCRETE SURFACE MEASUREMENTS. SEE ARCHITECTURAL DRAWINGS FOR FLOOR FINISHES, DEPRESSIONS, CURBS, ETC. WHERE DEPRESSIONS OCCUR, THE SCHEDULED DEPTH OF BEAMS AND SLABS ARE MEASURED FROM BOTTOM OF DEPRESSION.
11. PROVIDE #4 AT 12 INCHES ON CENTER BY 5 FEET LONG, TOP BARS OVER BEAMS WHICH ARE PARALLEL TO MAIN BARS OF ONE-WAY SLABS.
12. SEE ARCHITECTURAL DRAWINGS FOR ALL GIRT FRAMING AND EMBEDDED ITEMS IN CONCRETE.

Joe Louis Sports Arena
Pedestrian Walkway
For City Engineering Division

SH&G
Smith, Hinchman & Grylls Associates, Inc.
Architects Engineers Planners
455 West Fort Street
Detroit, Michigan 48226
(313)964-3000
SH&G Job. No. 11732C

OWNER — Issued For
5-30-80 — Date

10-2-79 — Date
N.R. — Drawn By
Div. Architect/Engineer
Correlation Check
Project Manager
Construction Administration Approval
Division Approval

Key Plan

Detail Number / Location or Detail Sheet

N

Drawing Title
THIRD STREET BRIDGE AND RAMP
COLUMN SCHEDULE AND DETAILS
15031A
Project No.
S-4J
Drawing No.
½" = 1'-0"
Scale
49 of 956

9-26-79

MC/PRM# 71858

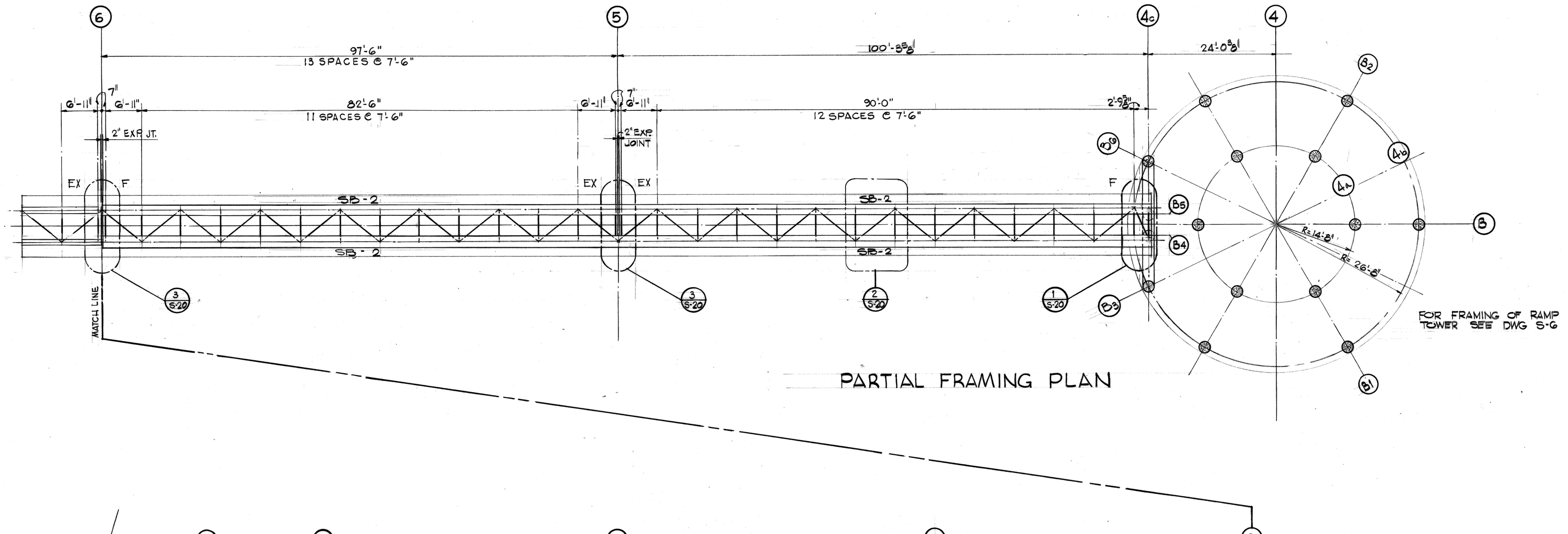

NOTE: FOR ELEVATOR TOWER FRAMING SEE DWG. S-7

NOTES:

1. T.O.S. GIRDER EL. 134'-1½"
2. CAMBER @ CENTER OF BM.
   a. FOR 60'-0" SPAN & SHORTER = 1¼"
   b. FOR SPAN LONGER THAN 60'-0" = 4½"
3. DESIGN LIVE LOAD = 100 PS.F FLOOR
   30 PS.F ROOF
4. FOR SIZE OF BM. SB-1 & SB-2 SEE SECT. "4" DWG. S-20
5. DESIGNATION OF TYPE OF BEARING ON THIS PLAN:
   F = FIXED BEARING
   EX = EXPANSION BEARING
6. DESIGN WIND LOAD:
   (a.) SUPERSTRUCTURE
      LATERAL = 50 PSF (WITH SHAPE FACTOR = 0.6)
      LONGITUDINAL = 12 PSF
   (b) SUBSTRUCTURE = 40 PSF

Joe Louis Sports Arena

Pedestrian Walkway

For City Engineering Division

SH&G
Smith, Hinchman & Grylls Associates, Inc.
Architects Engineers Planners
455 West Fort Street
Detroit, Michigan 48226
(313)964-3000

SH&G Job. No. 11732C

OWNER	5-30-80
Issued For	Date
J-18-80	
Date	Drawn By
Div. Architect/Engineer	
Correlation Check	
Project Manager	
Construction Administration Div. Approval	
Division Approval	

Key Plan

Detail Number / Location or Detail Sheet

N

Drawing Title
EAST-WEST BRIDGE FRAMING PLAN

15031A
Project No.
S-5
Drawing No.
3/32 = 1'-0"
Scale

50 of 96

9-26-79

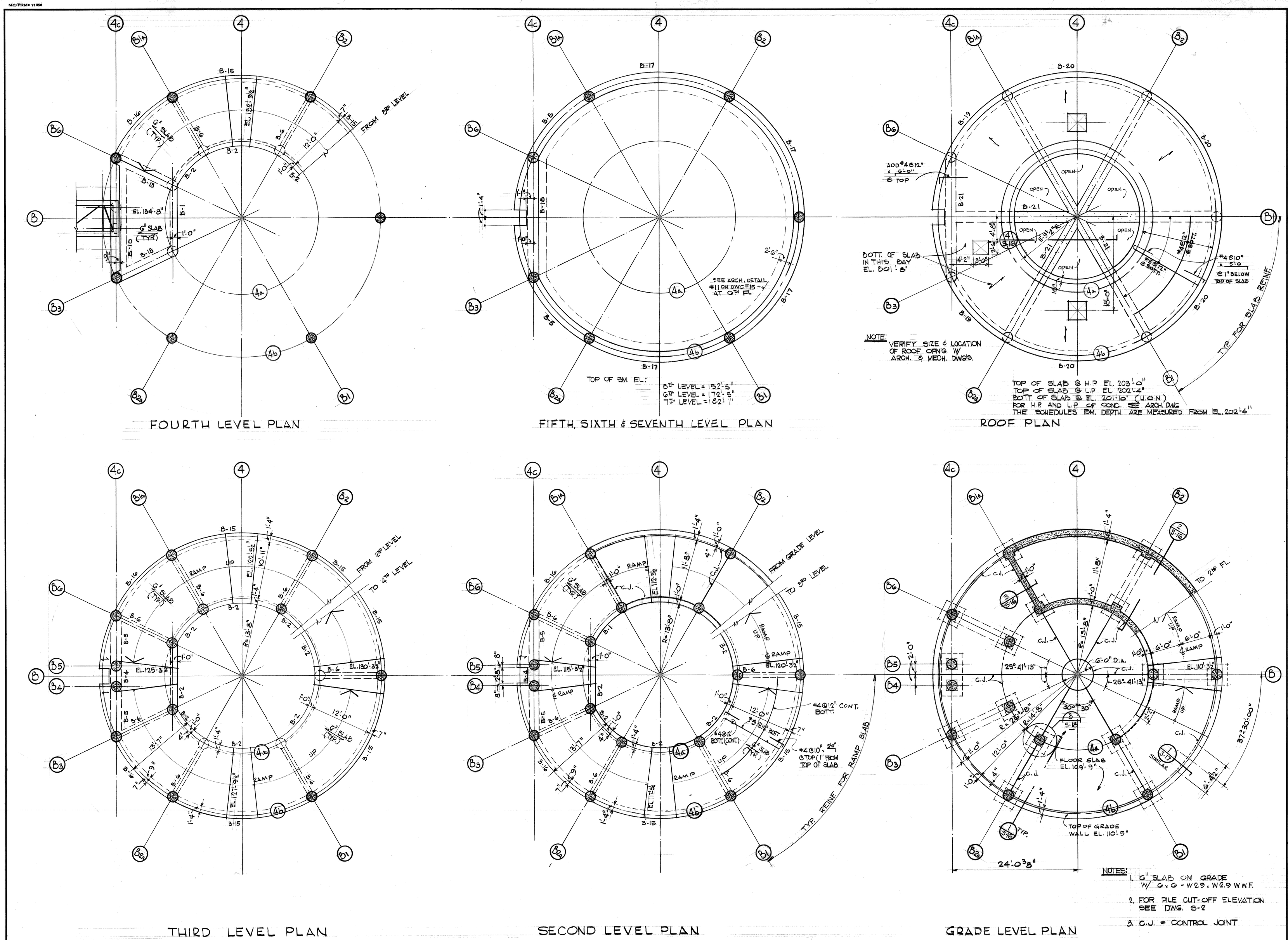

NOTES:
1. 6" SLAB ON GRADE W/ 6 x 6 - W2.9 x W2.9 W.W.F.
2. FOR PILE CUT-OFF ELEVATION SEE DWG. S-2
3. C.J. = CONTROL JOINT

Joe Louis Sports Arena
Pedestrian Walkway
For City Engineering Division

SH&G
Smith, Hinchman & Grylls Associates, Inc.
Architects Engineers Planners
455 West Fort Street
Detroit, Michigan 48226
(313)964-3000

SH&G Job. No. 11732C

OWNER — Issued For — 5-30-80 — Date

1-18-80 — Date — Drawn By
Div. Architect/Engineer
Correlation Check
Project Manager
Construction Administrator Div. Approval
Division Approval

Key Plan

Detail Number / Location or Detail Sheet

N

Drawing Title
RAMP TOWER FRAMING PLAN

15031A
Project No.
S-6
Drawing No.
1/8" = 1'-0"
Scale

51 of 96

MC/PRM# 71858

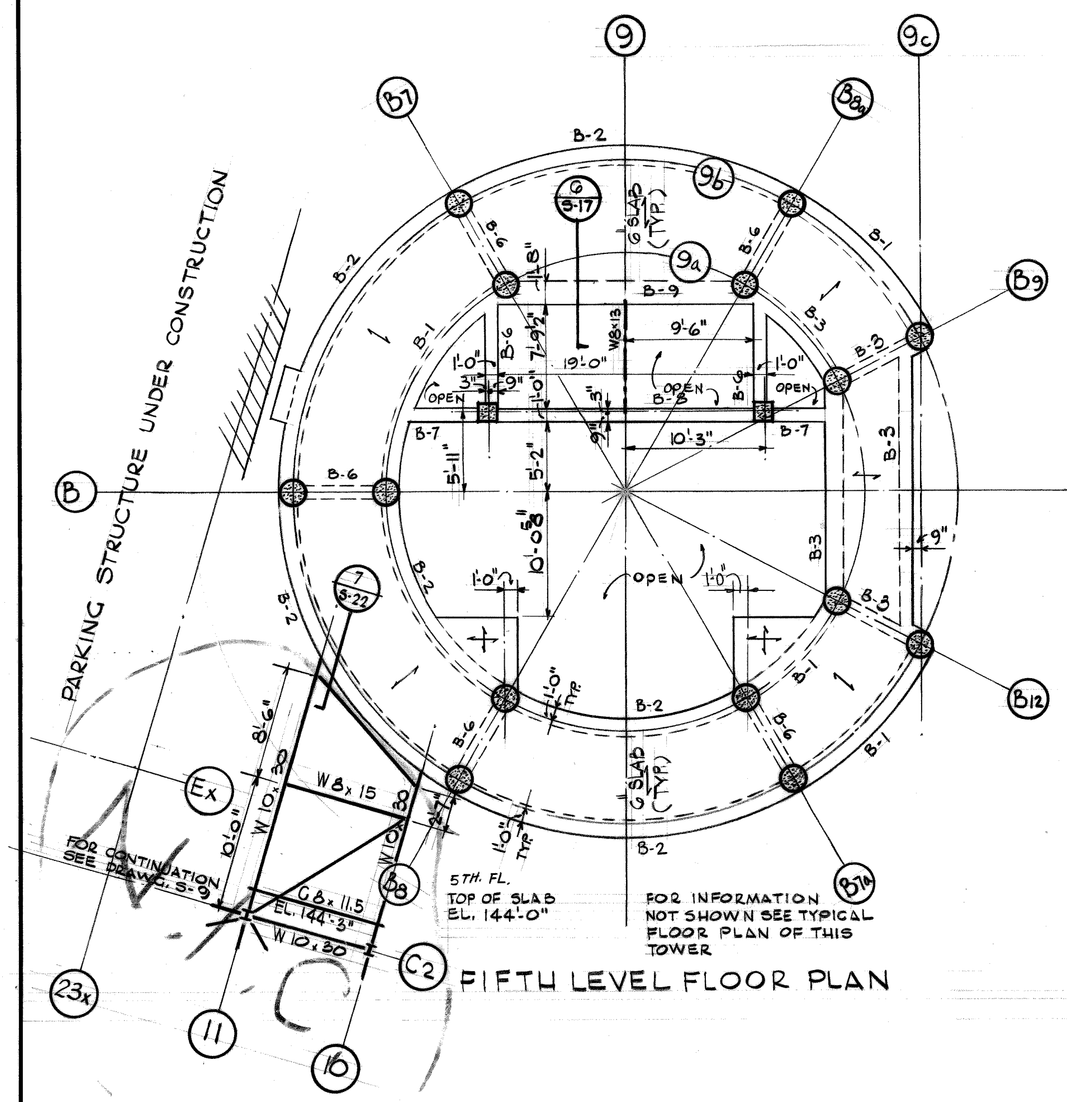

FIFTH LEVEL FLOOR PLAN

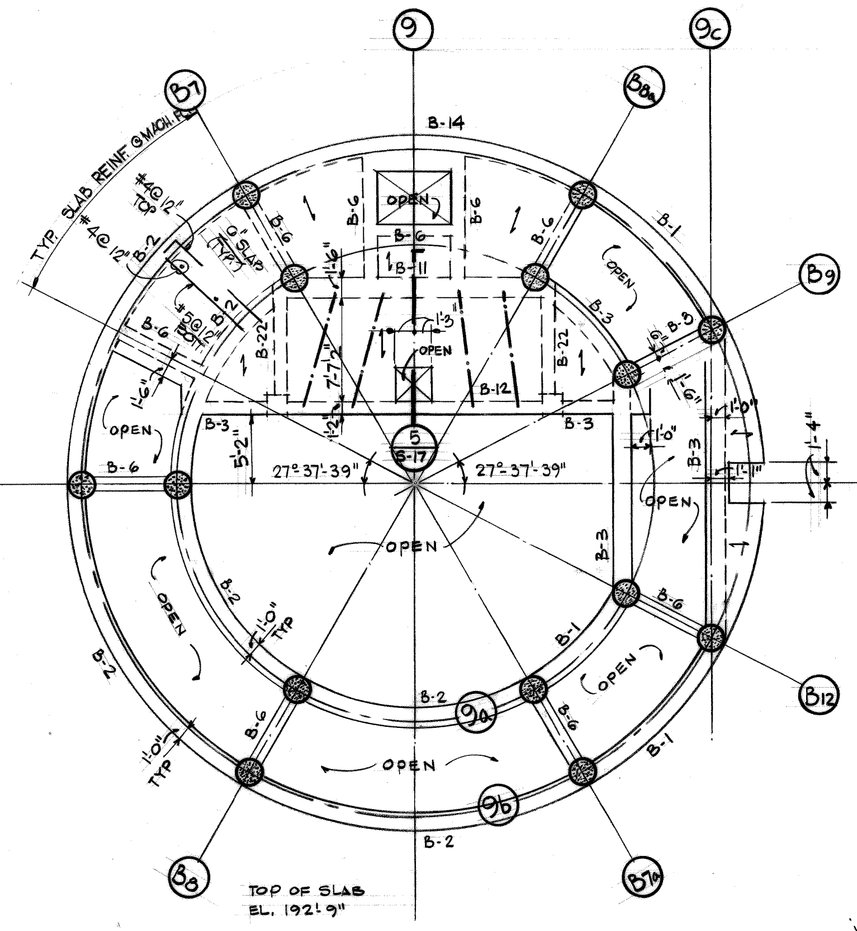

MACHINE ROOM FLOOR PLAN

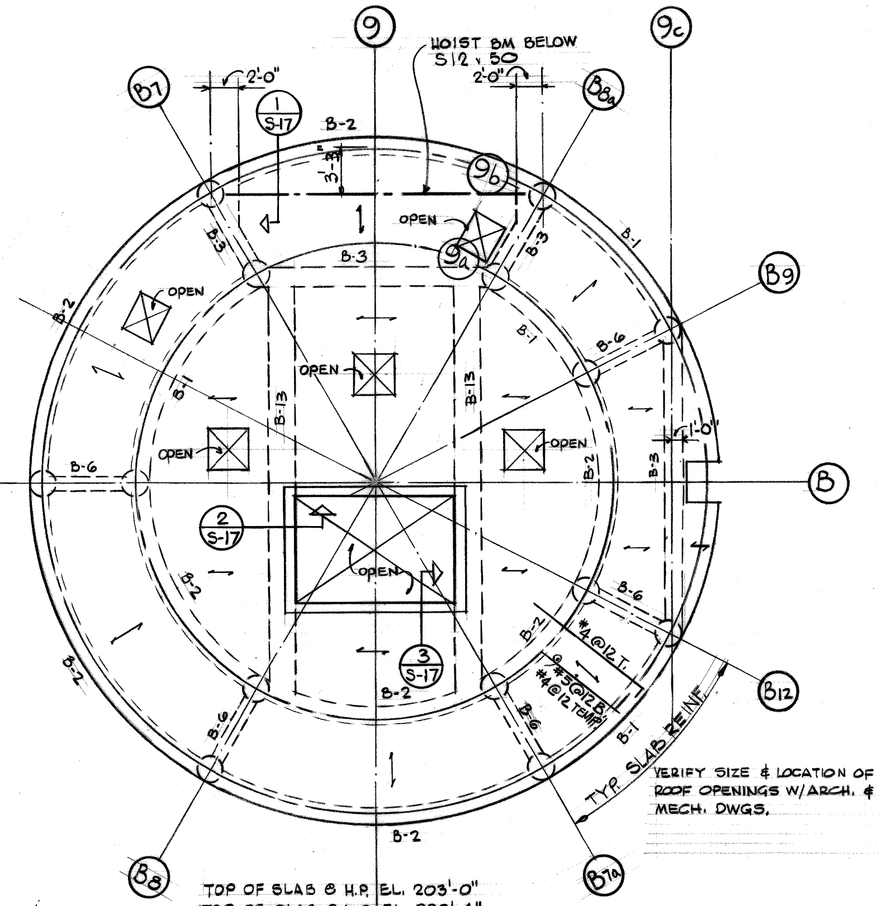

TOP OF SLAB @ H.P. EL. 203'-0"
TOP OF SLAB @ L.P. EL. 202'-4"
BOTT. OF SLAB @ EL. 201'-10"
THE SCHEDULE DEPTH OF BMS ARE MEASURED FROM EL. 202'-4" FOR LOCATION OF H.P. & L.P. SEE ARCH. DWG.

ROOF PLAN

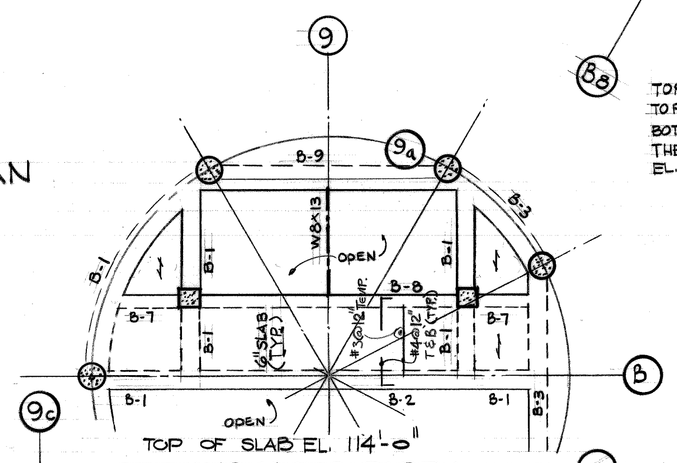

SECOND FLOOR PARTIAL FRAMING PLAN

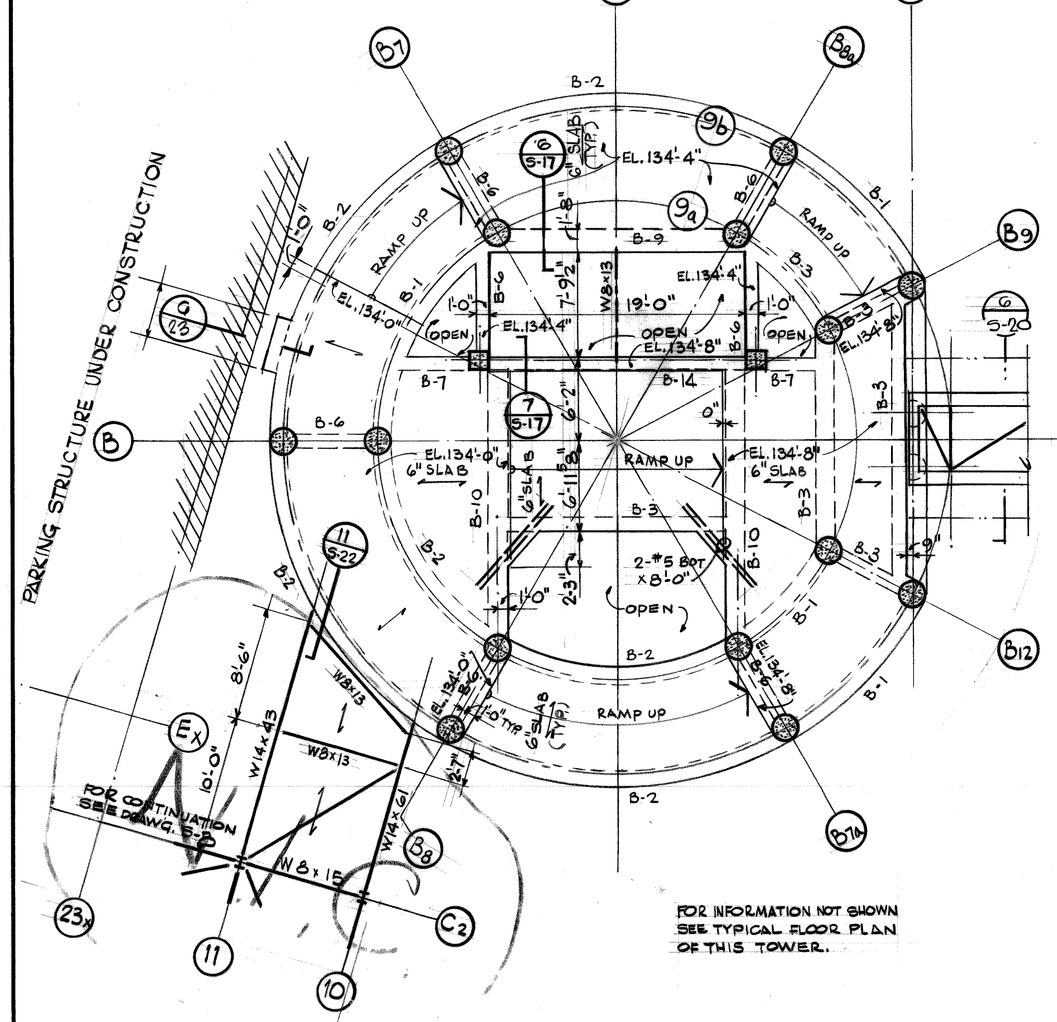

FOURTH LEVEL FLOOR PLAN

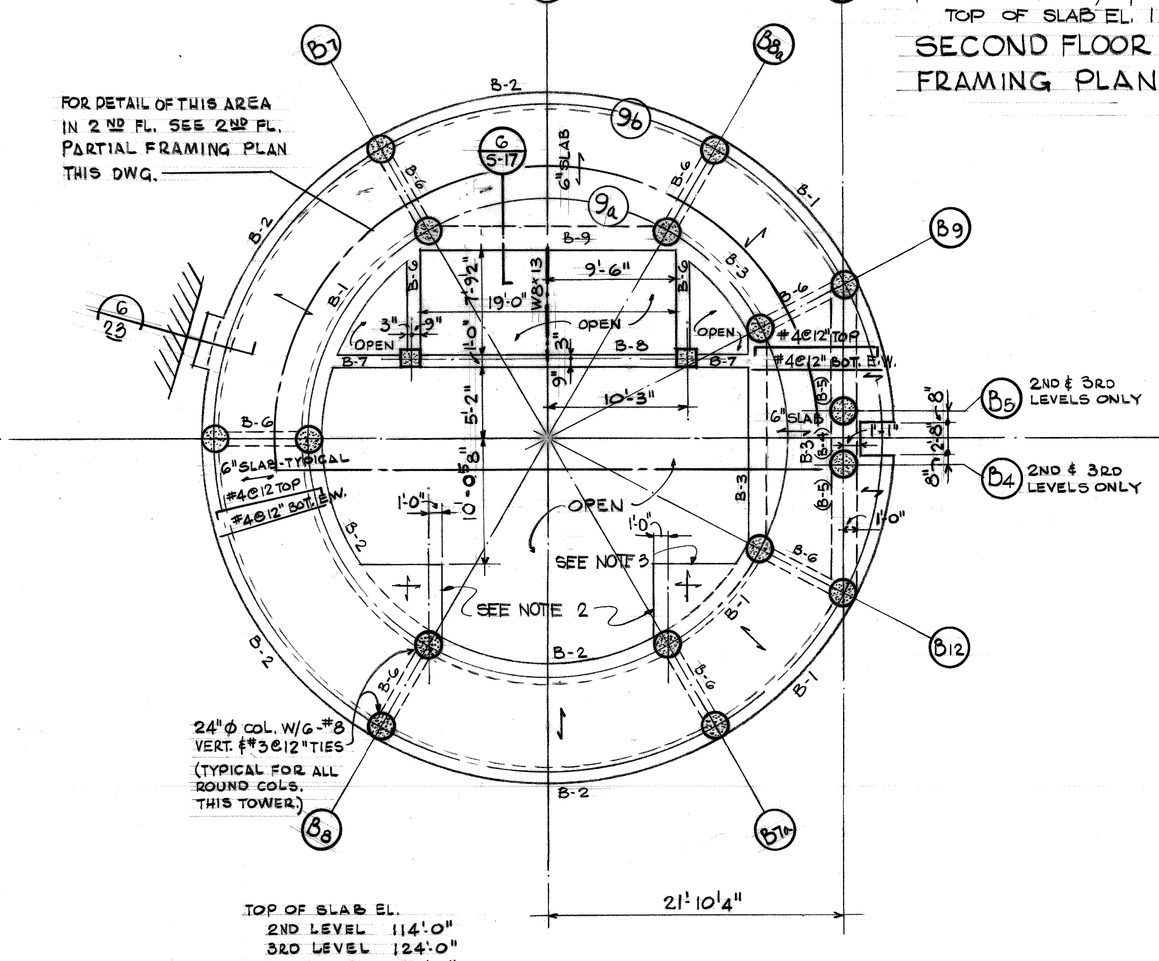

TOP OF SLAB EL.
2ND LEVEL 114'-0"
3RD LEVEL 124'-0"
6TH LEVEL 154'-0"
7TH LEVEL 164'-0"
8TH LEVEL 174'-0"

TYPICAL FLOOR PLAN FOR SECOND, THIRD, SIXTH, SEVENTH & EIGHTH LEVELS

NOTE: 1. BMS. IN ( ) APPLY TO 2ND & 3RD LEVELS ONLY
2. 9" THICK SLAB WITH #5@8", T&B TOP & #5@12" BOTT. TWO WAY
3. OMIT SLAB ADJACENT TO LINE "B7a" ON THE 8TH LEVEL CATILEVER

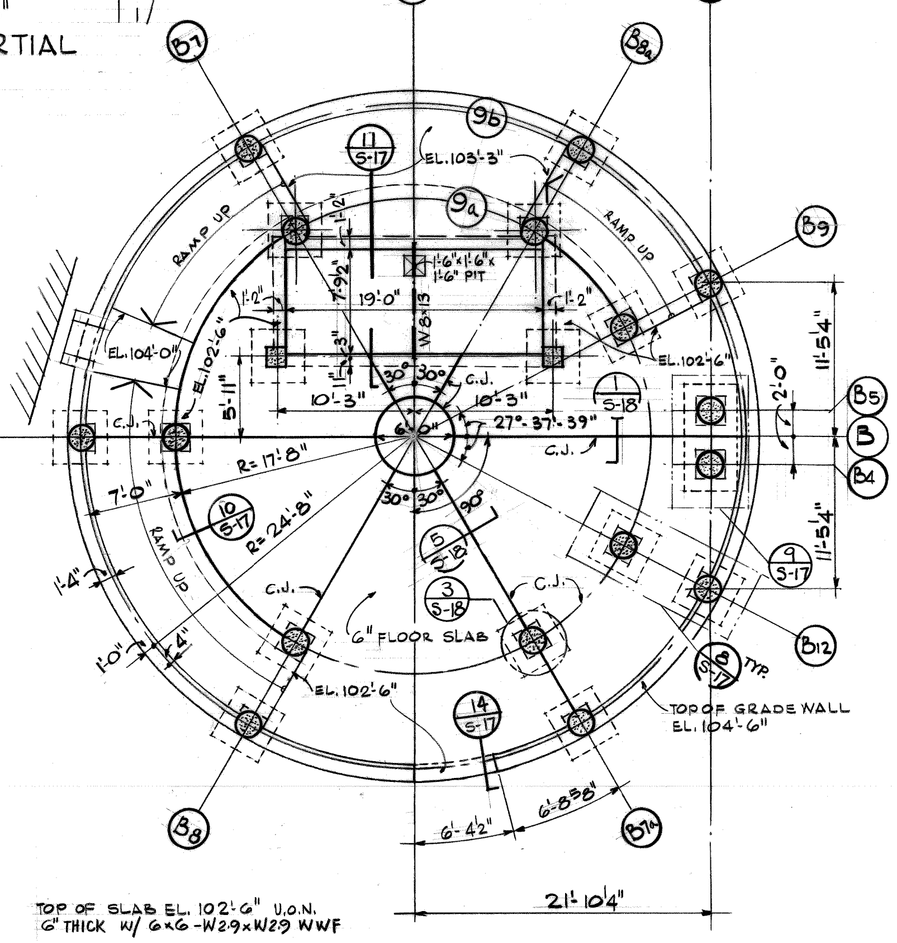

TOP OF SLAB EL. 102'-6" U.O.N.
6" THICK W/ 6x6-W2.9xW2.9 WWF

GRADE LEVEL PLAN

NOTES:
1. DESIGN LL FOR FLOOR = 100 PSF
FOR ROOF = 30 PSF
2. FOR OPENING SIZE & LOCATION REFER TO ARCH. & MECH. DWGS.
3. TOP OF FL. EL. 102'-6" (4.0.N.)
4. DESIGN WIND LOAD = 30 PSF.

Joe Louis Sports Arena
Pedestrian Walkway
For City Engineering Division

SH&G
Smith, Hinchman & Grylls Associates, Inc.
Architects Engineers Planners
455 West Fort Street
Detroit, Michigan 48226
(313)964-3000

SH&G Job. No. 11732C

OWNER — 5-30-80
Issued For — Date

1-18-80
Date — Drawn By
Div. Architect/Engineer
Correlation Check
Project Manager
Construction Administration Approval
Division Approval

Key Plan

Detail Number / Location or Detail Sheet

N

Drawing Title
ELEVATOR TOWER FRAMING PLAN

15031A
Project No.
S-7
Drawing No.
16"=1'-0"
Scale

52 of 96

9-26-79

MC/PRM# 71858

55-30-55.3

HP 10x42
OR HP 12x53
OR HP 14x73

PILE EXTENSION

DETAIL A

T-1/8 1/8 45° (TYP.)

DRIVEN PILE

HP 10x42
OR HP 12x53
OR HP 14x73

DETAIL A

BUTT WELD SPLICE DETAIL

DETAIL B — T-1/8 1/8 60° (TYP.)

HORIZONTAL POSITION

DETAIL E

NOTE: USE DETAIL A WHEN WELDING PILES IN PLACE (HORIZONTAL JOINT).
USE DETAIL B FOR WELDING WHEN PILE IS IN HORIZONTAL POSITION.

1 / S-2

4'-0" DIA.

NOTE: FOR COLUMN CAPITOL SEE DETAIL 7/S-1

34-#10 VERT.

#4@12" O

TEMP. STEEL SHEET PILING

BACK OF EXISTING CURB

GRADE

34-#10 DWLS

5-#9 T&B

#5@12"

#5@12"

2-3/4" Bars EA. SIDE OF PILE

EXIST. RETAINING WALL - EL 90'-6" OR EL. 89'-0"

EL. 89'-0"

22-#10

VARIES FROM (5-10" (12) TO 2'-11" (13))

1'-4"

2'-6"

1'-6"

3/16

1" JT. FILLER

2 / S-2

AVOID UNDERMINING - PROTECT AGAINST EROSION OF SOIL BELOW EXISTING FOOTING WHEN EXCAVATING FOR NEW PILE CAP

* NOTE: THESE BARS SHALL BE A-36 STEEL TO PERMIT WELDING.

B

4'-0" DIA.

NOTE: FOR COLUMN CAPITOL SEE DETAIL 7/S-1

34-#10 VERT.

1'-6" 7'-6" 7'-6" 1'-6"

1'-6" 1'-6"

GRADE

#4@12" O

34-#10 DWLS

5-#7

TOP OF PILE CAP EL. 102'-3"

3'-6"

6" CL.

6"

2-#4 STIRRUPS PER SET @ 12" CTRS THRU-OUT

12-#11

6-#9

3 / S-2

G

4'-6" 3'-0"

10-#7 TOP

#5@12"

13-#11 BOTT.

6-#9, 3/4" CLR. E.F.

#9 @ 6" E.W.

EL. 99'-10"± EXISTG. ELECT. DUCT.

6-#9 LONG BOTT.

EL. 101'-5" (VERIFY IN FIELD) (EXISTG. ELECT. DUCT)

EXISTG. THIRD ST. SEWER TOP EL. 97'-0"± (VERIFY IN FIELD)

6 / S-15

5 / S-15

6" COVER

EL. 105'-9"

3'-9½"

3½"

4'-0"

EL. 97'-11½"

2-#11

FOR REINF. SEE SECT. "I" THIS DWG.

7

3 / S-2

1'-2" 2'-0" 2'-0" 1'-2"

6"

3-W36x300

EL. 105'-9"

FOR REINF. SEE SECT. G THIS DWG.

#8 1"x 18" x 7'-8"

½"x 6" STIFF PL. EA. SIDE

8-1" ϕ A.B

PL 6"x 6" x ¾"

3'-0"

2½" GROUT

3'-9½"

4'-0" 4'-0"

5 / S-1

4 / S-2

½"=1'-0"

1'-2" 2'-0" 2'-0" 1'-2"

6"

EL. 105'-9"

4-#5

PIPE SEPARATORS @ 3'-0"

#4@12"

1" THRU-RODS

4'-0"

3-W36x300

6-#8 #7@8" E.F.

6 / S-15

NOTE: FOR COLUMN CAPITOL SEE DETAIL 7/S-1

B

10'-3½"

7'-0"

4'-0" ϕ

SEE SECT. "5" THIS DWG.

34-#10 VERT.

EL. 105'-9"

34-#10 DOWEL

2-G

#4 @ 12 TIES O

12-#7

3'-9½"

4'-0"

EL. 97'-11½"

6-#9

2-#8 STIRRUPS PER SET @ 12" CTRS THRU-OUT

15-#11

7 / S-2

½"=1'-0"

Web PL

Flange PL

HP 10x42 or HP 12x53 or HP 14x73

3/8"

4"x 3/8" x 1'-3" PL for HP 10x42
5"x 3/8" x 1'-6" PL for HP 12x53
6"x 3/4" x 2'-2" PL for HP 14x73

SPLICE DETAILS

* NOTE

Set upper splice section in place with splice PL's attached, tap several times with the hammer to improve bearing contact, then complete welding of PL's to the lower section.

5"x ½" x 0'-9" PL for HP 10x42
5"x 5/8" x 1'-0" PL for HP 12x53
6"x ½" x 1'-1" PL for HP 14x73

Splice Pin

APF Splicer Sleeve

0" root opening

1/8" root Penetration

60°

DETAIL-A

HP 10x42 or HP 12x53 or HP 14x73

5/16" 1/4

Pile Extension

* Ends of piles must bear

5/16" +1/8" 60°

Detail A

APF Splicer Sleeve

Driven Pile

5/16" 1/4

7/8"

Chamfer outside edges of pile flange. (typ.)

NOTCH DETAIL

ALTERNATE SPLICE DETAILS

(APF = Associated Pipe & Fitting Company)

8 / S-2

Ends of piles must bear

3/8"

Joe Louis Sports Arena

Pedestrian Walkway

For City Engineering Division

SH&G
Smith, Hinchman & Grylls Associates, Inc.
Architects Engineers Planners
455 West Fort Street
Detroit, Michigan 48226
(313)964-3000
SH&G Job. No. 11732C

OWNER Issued For — 5-30-80 Date

1-18-80 Date — N.R. Drawn By

Div. Architect/Engineer

Correlation Check

Project Manager

Construction Administrative Div. Approval

Division Approval

Key Plan

Detail Number / Location or Detail Sheet

N

Drawing Title
SECTIONS AND DETAILS

15031A
Project No.

S-15
Drawing No.

3/8"=1'-0" (U.O.N.)
Scale

9-26-79

MC/PRM= 71858

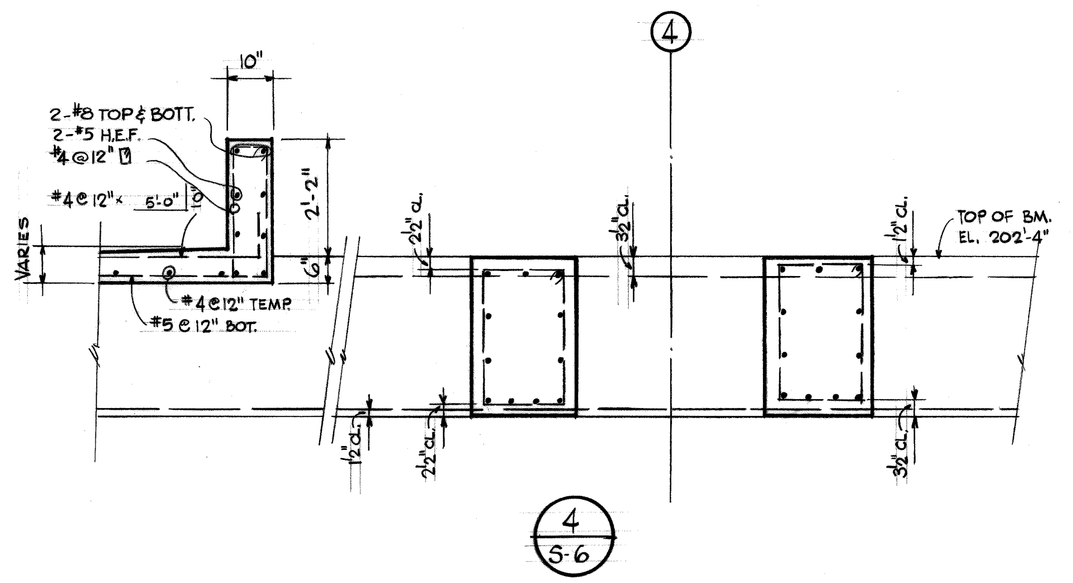

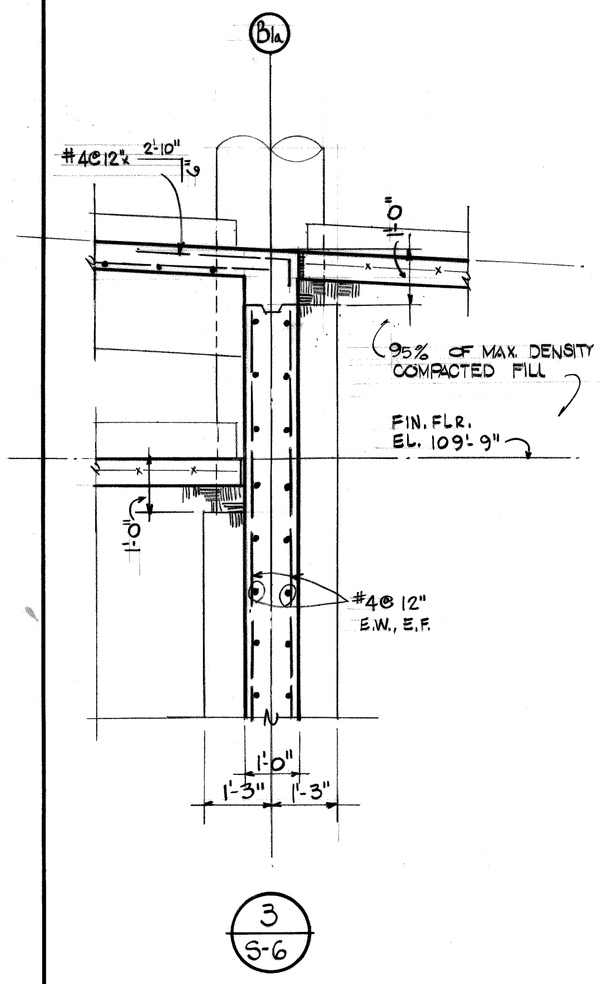

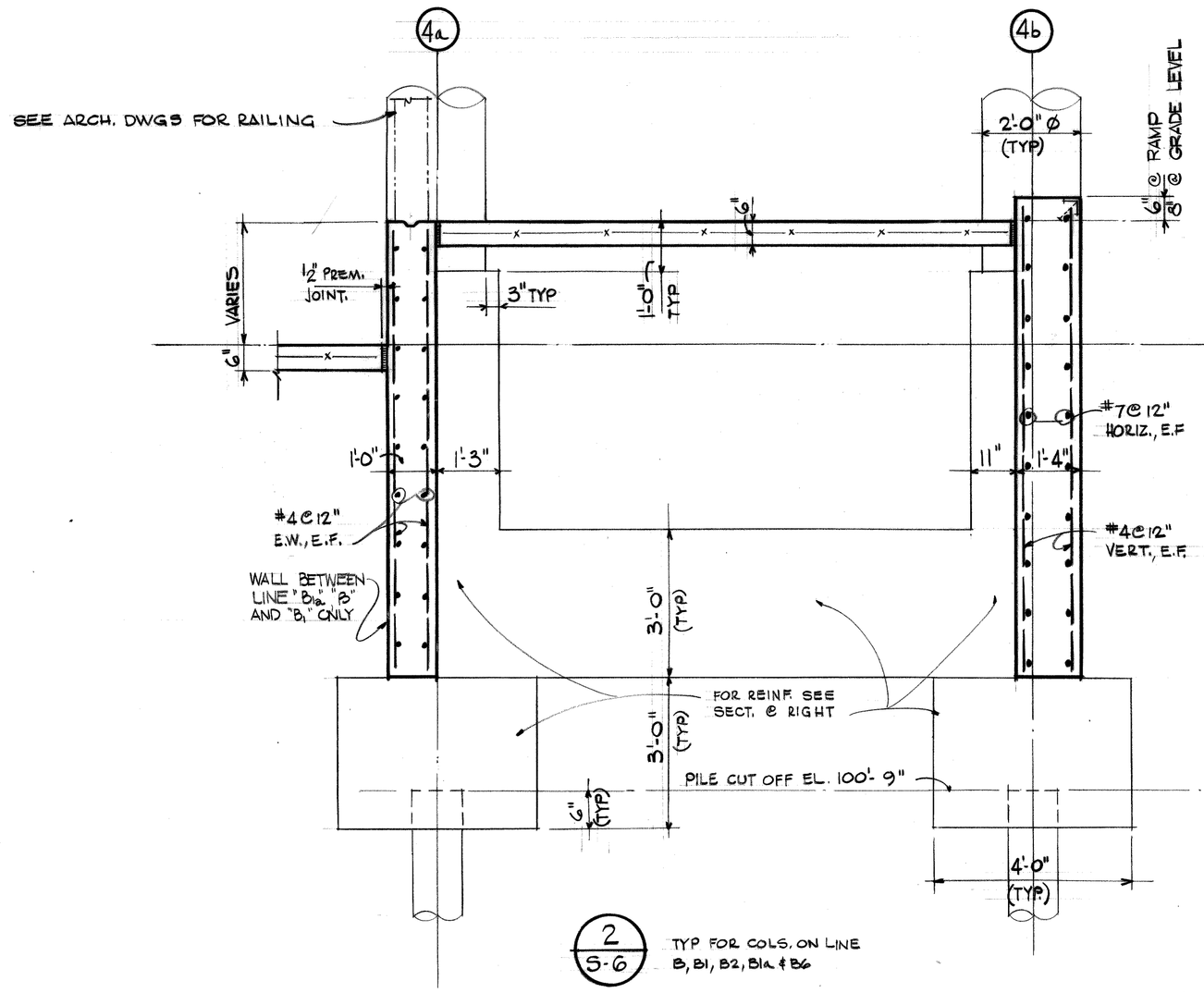

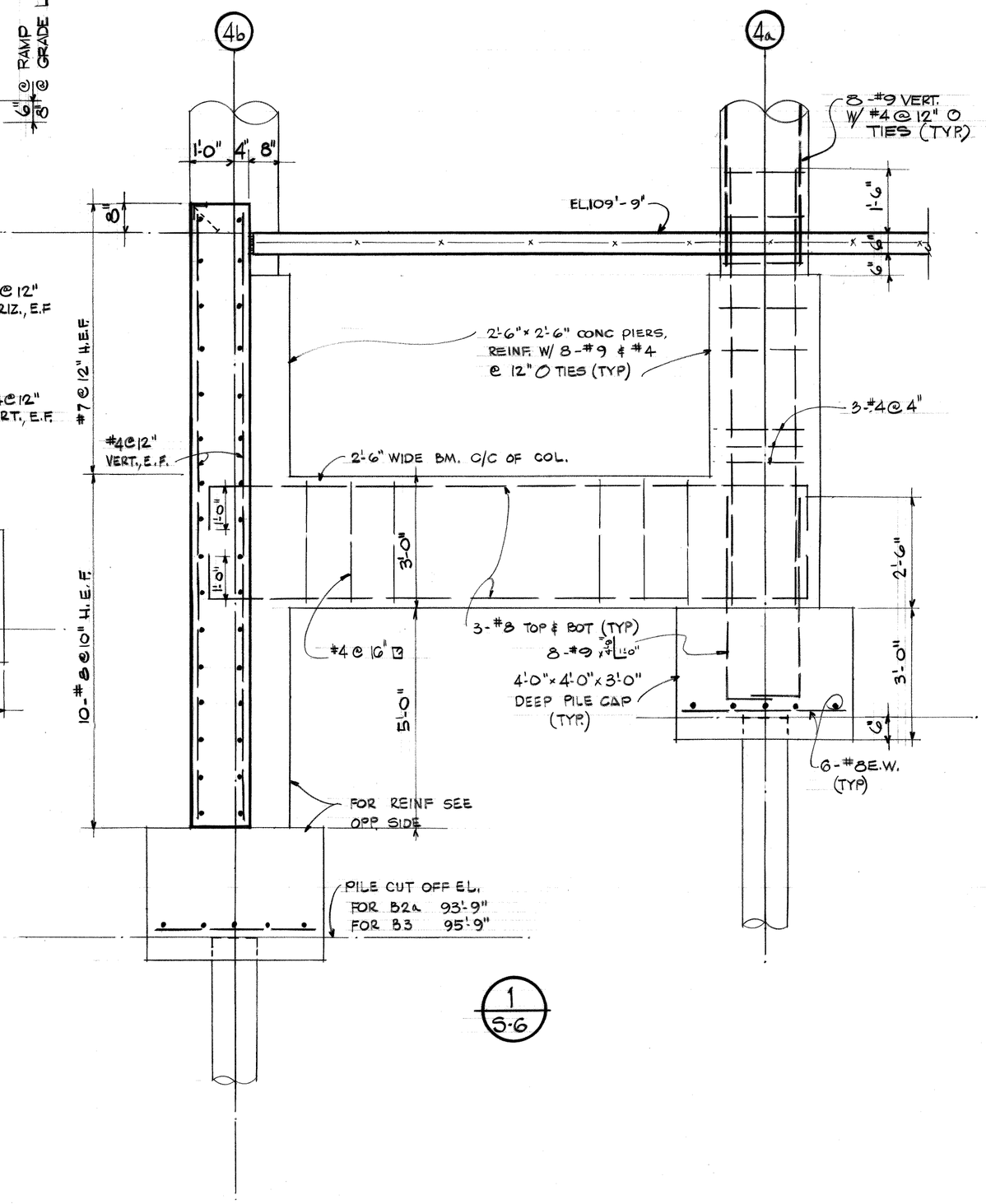

Joe Louis Sports Arena

Pedestrian Walkway

For City Engineering Division

SH&G
Smith, Hinchman & Grylls Associates, Inc.
Architects Engineers Planners
455 West Fort Street
Detroit, Michigan 48226
(313)964-3000
SH&G Job. Nc. 11732C

OWNER — 5-30-80
Issued For — Date

1-18-80
Date — Drawn By

Div. Architect/Engineer

Correlation Check

Project Manager

Construction Administrative Div. Approval

Division Approval

Key Plan

Detail Number / Location or Detail Sheet

N

Drawing Title
SECTIONS AND DETAILS

15031A
Project No.
S-16
Drawing No.
1/2"=1'-0"
Scale

54 of 96

5-26-79

MC/PRM• 71858

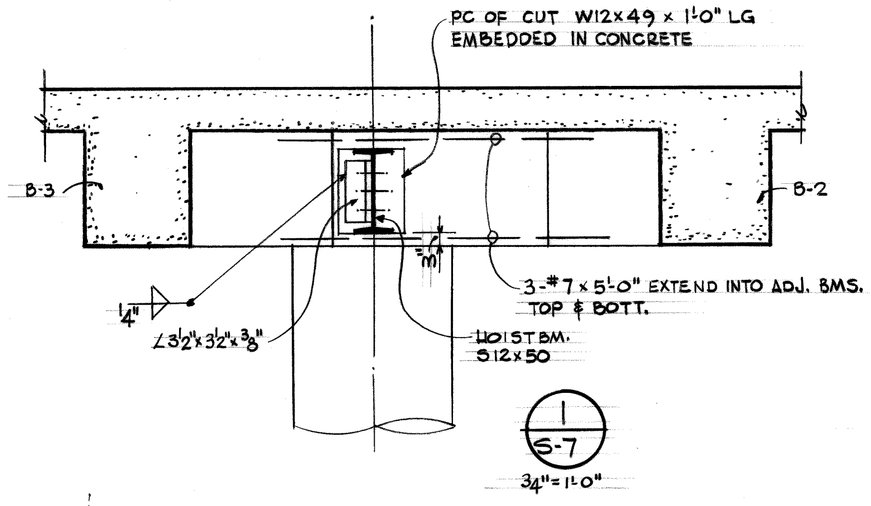

1 S-7

3/4"=1'-0"

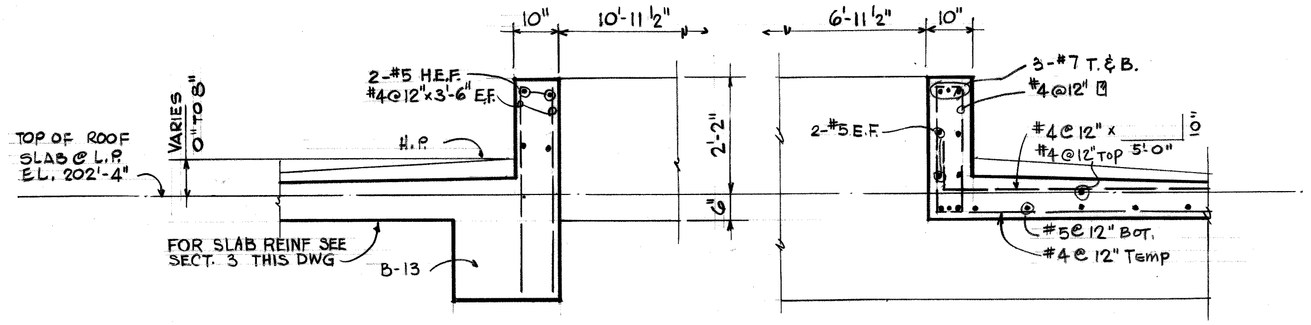

2 S-7

3 S-7

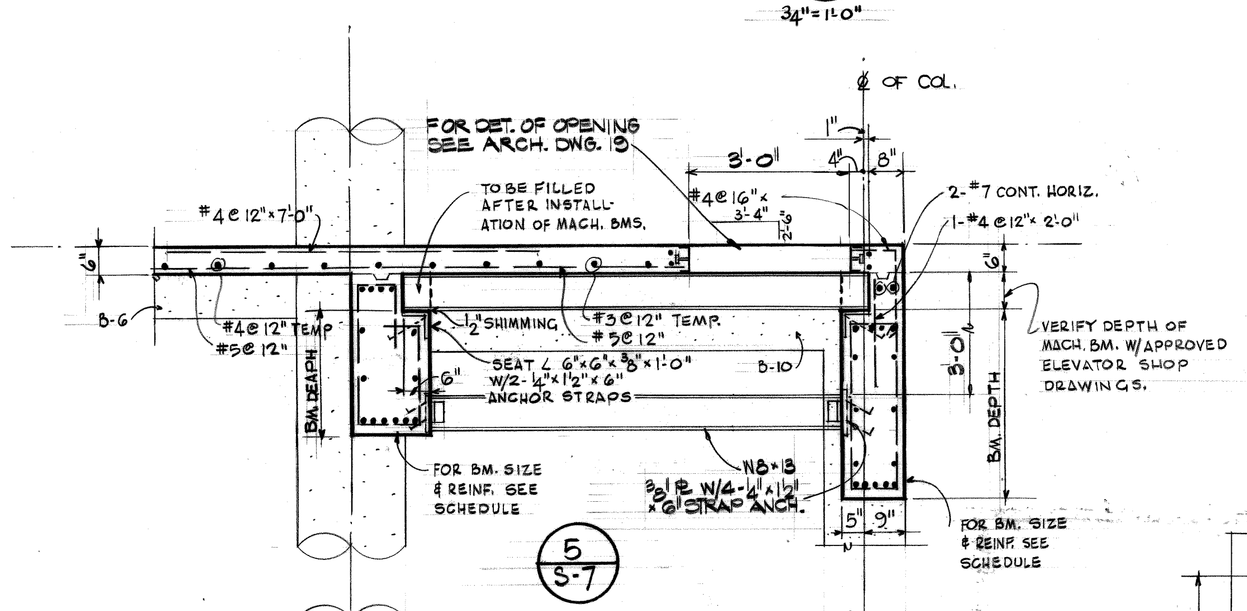

5 S-7

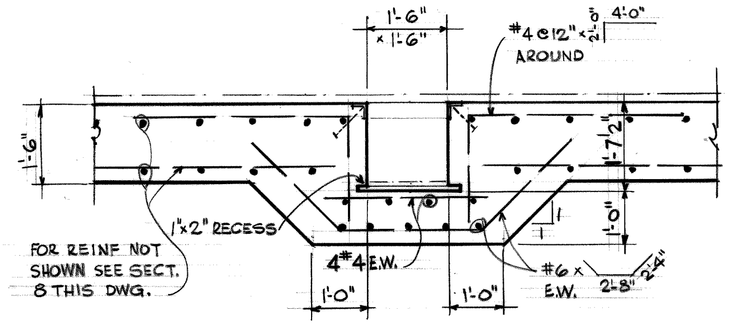

4 S-17

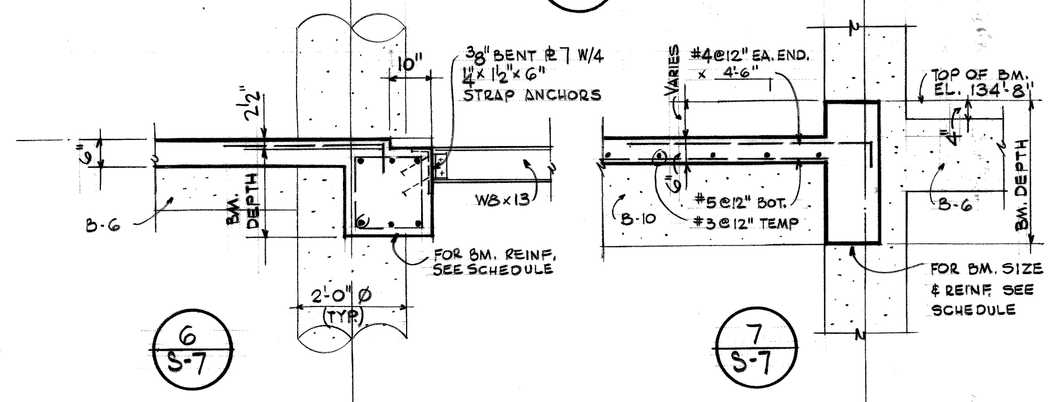

6 S-7

7 S-7

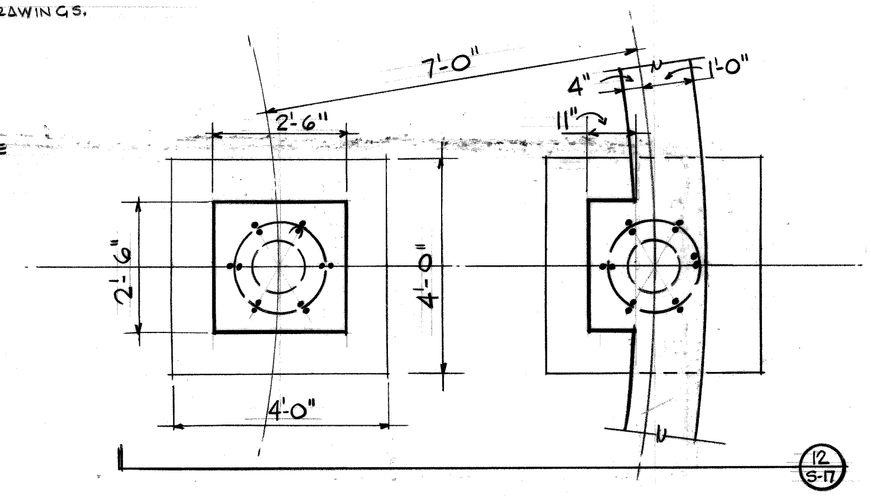

12 S-17

8 S-2

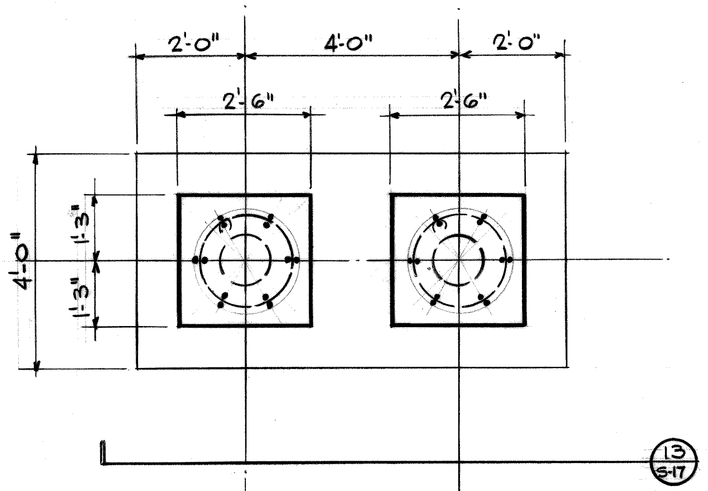

13 S-17

9 S-2

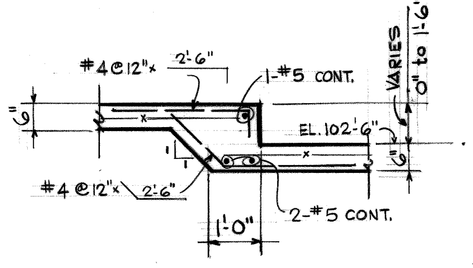

10 S-7

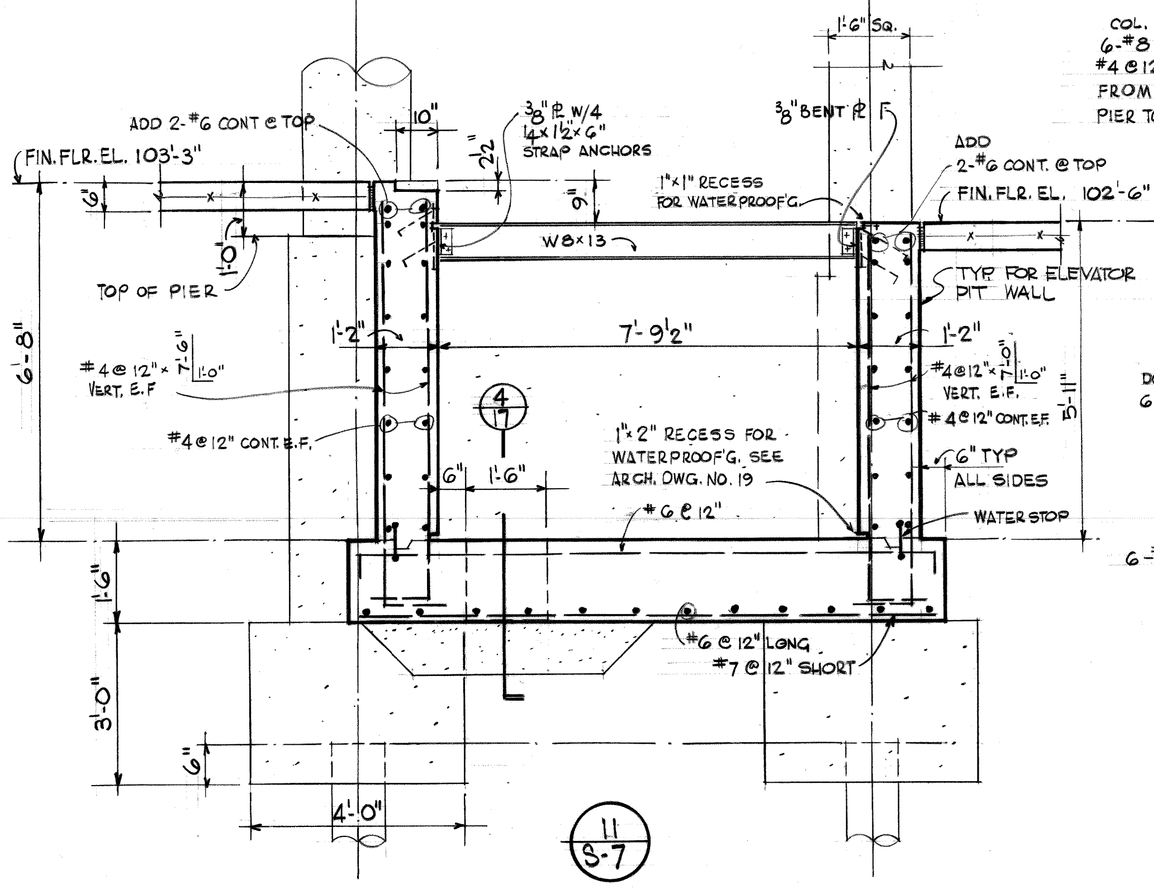

11 S-7

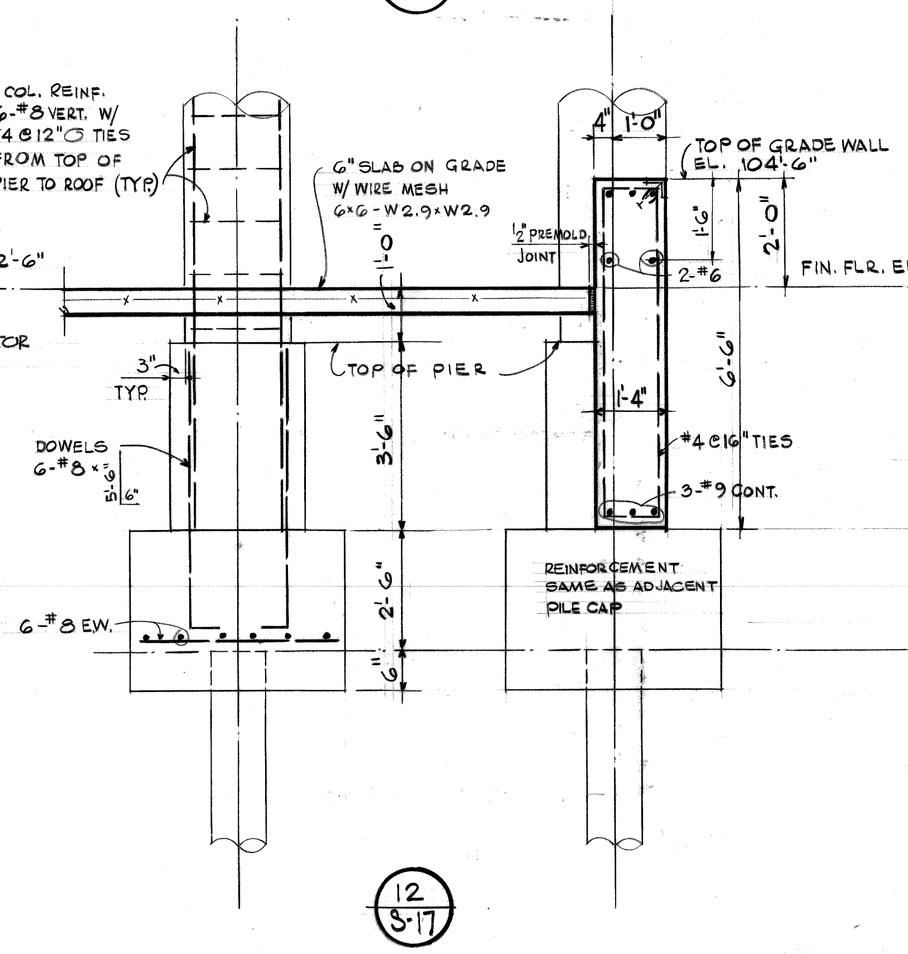

12 S-17

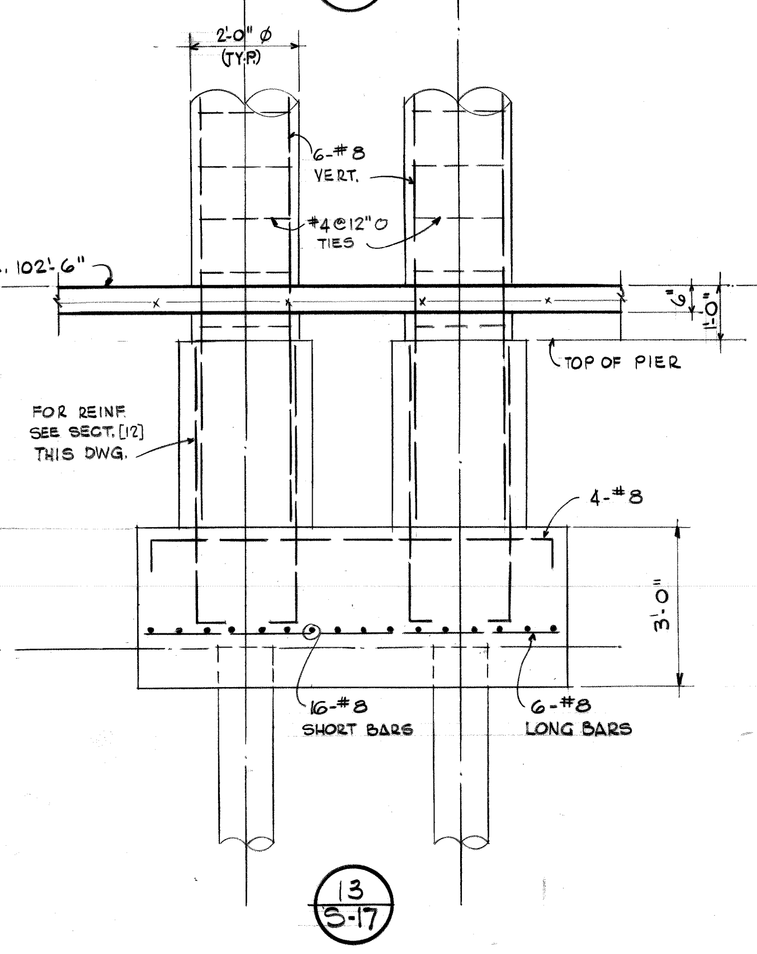

13 S-17

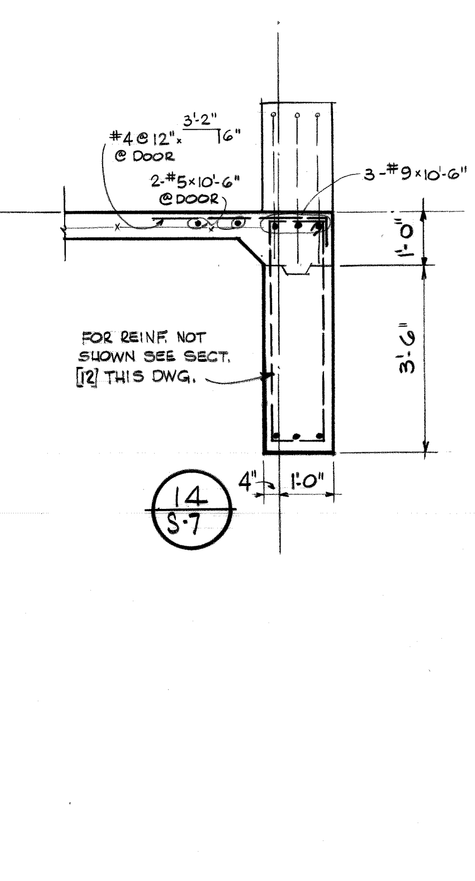

14 S-7

Joe Louis Sports Arena

Pedestrian Walkway

For City Engineering Division

SH&G
Smith, Hinchman & Grylls Associates, Inc.
Architects Engineers Planners
455 West Fort Street
Detroit, Michigan 48226
(313)964-3000

SH&G Job. No. 11732C

OWNER — 5-30-80
Issued For — Date

1-18-80 — Drawn By
Date

Div. Architect/Engineer

Correlation Check

Project Manager

Construction Administration Div. Approval

Division Approval

Key Plan

Detail Number / Location or Detail Sheet

N

Drawing Title
SECTIONS AND DETAILS

15031A
Project No.
S-17
Drawing No.
1/2"=1'-0"
Scale

55 OF 976

9-26-79

MC/PRM# 71858

BEAM SCHEDULE

MARK	BEAM SHAPE	BEAM WIDTH	BEAM DEPTH	REINFORCEMENT TOP DISC. END	REINFORCEMENT STRAIGHT BOTTOM	REINFORCEMENT TOP EA. END	REINFORCEMENT ARRG'NT.	STIRRUPS THRU-OUT	REMARKS
B-1		16	24	2-#6	3-#6	—		#4@12"	EXTEND TOP REINF. INTO ADJ. SPAN
B-2		16	24	—	3-#6	2-#6		#4@12"	
B-3		16	24	2-#6	3-#6	—		#4@12"	
B-4		24	24	—	3-#7	—		#4@12"	ADD 3-#6 TOP CONT. & EXTEND INTO ADJ. SPAN
B-5		24	24	3-#6	3-#7	—		#4@12"	ADD 2-#7 @ CONT. END
B-6		12	16	2-#5	2-#6	—		#4@12"	
B-7		12	16	2-#6	2-#7	—		#4@12"	
B-8		12	16	—	2-#7	2-#6		#4@12"	
B-9		20	22	3-#6	3-#7	—		#4@12"	
B-10		16	24	3-#6	3-#8	—		#4@12"	
B-11		18	36	4-#9	6-#9	—		#4@12"	ADD 2-#7@EA. VERT. FACE
B-12		14	42	3-#8	5-#9	—		#4@12"	ADD 2-#7@ EA.VERT. FACE
B-13		24	24	4-#8	6-#9	—		#4@12"	ADD 1-#7 @MID OF EA. VERT. FACE
B-14		12	32	—	3-#7	2-#7		#4 @ 12"	
B-15		16	24	—	3-#6	2-#7		#4@12"	
B-16		16	24	3-#6	3-#6	—		#4@12"	ADD 2-#7 @ CONT. END.
B-17		24	24	—	3-#7	2-#7		#4@12"	
B-18		24	24	3-#6	3-#7	—		#4@12"	
B-19		24	36	2-#7	4-#8	2-#8		#4@12"	ADD 2-#7@MID.OF EA.VERT. FACE.
B-20		24	36	—	4-#8	2-#8		#4@12"	ADD 2-#7@MID.OF EA.VERT. FACE.
B-21		24	36	3-#8	5-#10	—		#4@12"	ADD 2-#7@MID.OF EA.VERT. FACE, ADD 3-#7 TOP CONT.
B-22		16	36	2-#8	3-#8	—		#4@12"	ADD 2-#7@MID. OF EA.VERT. FACE

NOTE: DASH LINES IN "ARRANGEMENT" COLUMN DENOTE REINFORCEMENT FROM ADJACENT SPANS.

TABLE OF BEAM SHEAR CONNECTION

BEAM SIZE	NO. OF BOLTS REQUIRED		
	SINGLE SHEAR	DOUBLE SHEAR	
W6, W10, W12	2	2	
W12, W14	3	2	
W16 EXCEPT W16x89	3	2	
W18 & W16x89	4	3	

NOTE: ALL BOLTS SHALL BE ¾" ϕ HIGH STRENGTH BOLTS STEEL CONFORM TO ASTM A325 X

STRUCTURAL STEEL

1. STRUCTURAL STEEL WORK SHALL COMPLY WITH THE SPECIFICATIONS FOR THE DESIGN FABRICATION AND ERECTION OF STRUCTURAL STEEL FOR BUILDINGS OF THE AISC CURRENT EDITION.
2. ALL STRUCTURAL STEEL SHALL CONFORM TO ASTM, A-36 CURRENT EDITION. STRUCTURAL STEEL FOR THE TUBE SECTION SHALL CONFORM TO ASTM, A-501.
3. ALL FIELD CONNECTION SHALL BE FASTENED WITH 3/4" DIAMETER HIGH STRENGTH BOLTS CONFORM WITH ASTM A325. SEE SPECS.
4. ELASTOMERIC BEARING PADS SHALL CONFORM TO THE REQUIREMENTS OF THE STANDARD SPECIFICATION FOR HIGHWAY BRIDGES, 12TH EDITION, SECTION 2.25. THE HARDNESS FOR FIX BEARING SHALL BE OF 70 DUROMETER AND FOR EXPANSION BEARING SHALL BE OF 50 DUROMETER.
5. RECORD ELEVATIONS AT TOP OF TRUSSES (AND BOX GIRDERS) AT EACH QUARTER POINT OF SPAN IMMEDIATELY AFTER THE ERECTION OF TRUSS (OR BOX GIRDER) AND ALSO AFTER ALL DEAD LOADS ARE IN PLACE.
6. A-36 STRUCTURAL STEEL SHALL MEET THE REQUIREMENTS SET FORTH IN THE M.D.O.T. STANDARD SPECIFICATIONS FOR CONSTRUCTION, 1979 - ART. 8.06.04 a. THE TESTING TEMPERATURE FOR ALL STRESS MEMBERS SHALL BE 10° F.

GENERAL NOTES

CONCRETE

1. ALL CONCRETE SHALL HAVE MINIMUM COMPRESSIVE STRENGTH IN 28 DAYS AS FOLLOWS:

CAST IN PLACE CONCRETE PILES	6000 PSI
ALL OTHERS	4000 PSI

2. ALL BAR REINFORCEMENT SHALL CONFORM TO ASTM A 615, GRADE 60 EXCEPT TIES AND STIRRUPS SHALL CONFORM TO ASTM A615 - GRADE 40.
3. DESIGN LIVE LOAD

ROOF	30 PSF.
RAMP, WALKWAYS AND BRIDGES	100 PSF.

4. ALL HORIZONTAL BARS IN CONCRETE WALLS SHALL BE CONTINUOUS AND BENT AT ALL CORNERS AND INTERSECTIONS. SEPARATE CORNER BARS OF THE SAME SIZE AND SPACING MAY BE SUBSTITUTED FOR THE BENT BARS. SPLICES SHALL COMPLY WITH ACI 318, SECTION 12.16, CLASS "A".
5. TOP AND BOTTOM BARS FOR GRADE BEAMS SHALL BE OF MAXIMUM OBTAINABLE LENGTHS. SPLICE SHALL BE LOCATED AT MID-SPAN FOR TOP BARS AND AT SUPPORTS FOR BOTTOM BARS COMPLYING WITH ACI 318-77, SECTION 12.16, CLASS "B".
6. UNLESS OTHERWISE NOTED OR SHOWN, PROVIDE 2 - #5 BARS (ONE EACH FACE) AROUND UNFRAMED OPENING IN CONCRETE WALLS AND SLABS. PLACE BARS PARALLEL TO SIDES OF OPENINGS AND EXTEND THEM 2'-0" BEYOND CORNERS.
7. REINFORCEMENT NOTED ON PLANS AND SECTIONS IS ADDITIONAL TO THAT CALLED FOR IN THE SCHEDULES.
8. COLUMNS SHALL BE POURED MONOLITHIC WITH CONNECTING WALLS AND DOWELED TO THE PILE CAPS WITH SAME NUMBER AND SIZE OF COLUMN REINFORCING BARS.
9. UNLESS OTHERWISE SHOWN OR NOTED, DIMENSIONS ARE ROUGH CONCRETE SURFACE MEASUREMENTS. SEE ARCH. DRAWINGS FOR FLOOR FINISHES, DEPRESSIONS, CURBS, PARAPET, ETC. WHERE DEPRESSIONS OCCUR, THE SCHEDULED DEPTH OF BEAMS AND SLABS ARE MEASURED FROM BOTTOM OF DEPRESSION.
10. PROVIDE #4 @ 12" ON CENTER BY 5 FEET LONG TOP BARS OVER BEAMS WHICH ARE PARALLEL TO MAIN BARS OF ONE-WAY SLAB.
11. INSTALL EMBEDDED ITEMS INCLUDED IN THE MISCELLANEOUS STEEL SECTION AS INDICATED IN THE ARCHITECTURAL DRAWINGS.
12. SIZES OF EXPANSION JOINT SHOWN ON PLAN ARE AT 60°F.
13. BRIDGE DESIGN IS IN COMPLIANCE WITH THE AASHTO STANDARD SPECIFICATIONS FOR HIGHWAY BRIDGES WITH THE FOLLOWING EXCEPTIONS:
    A) LIVE LOAD = 100 PSF IN LIEU OF 85 PSF.
    B) WIND LOAD ON CURTAIN WALLS OF THE N-S BRIDGE IS 30 PSF IN LIEU OF 50 PSF. STRUCTURAL STEEL FRAMING IS DESIGNED TO 50 PSF. (REDUCED TO 30 PSF BY USE OF SHAPE FACTOR OF 0.6 IN E-W CIRCULAR STRUCTURE)

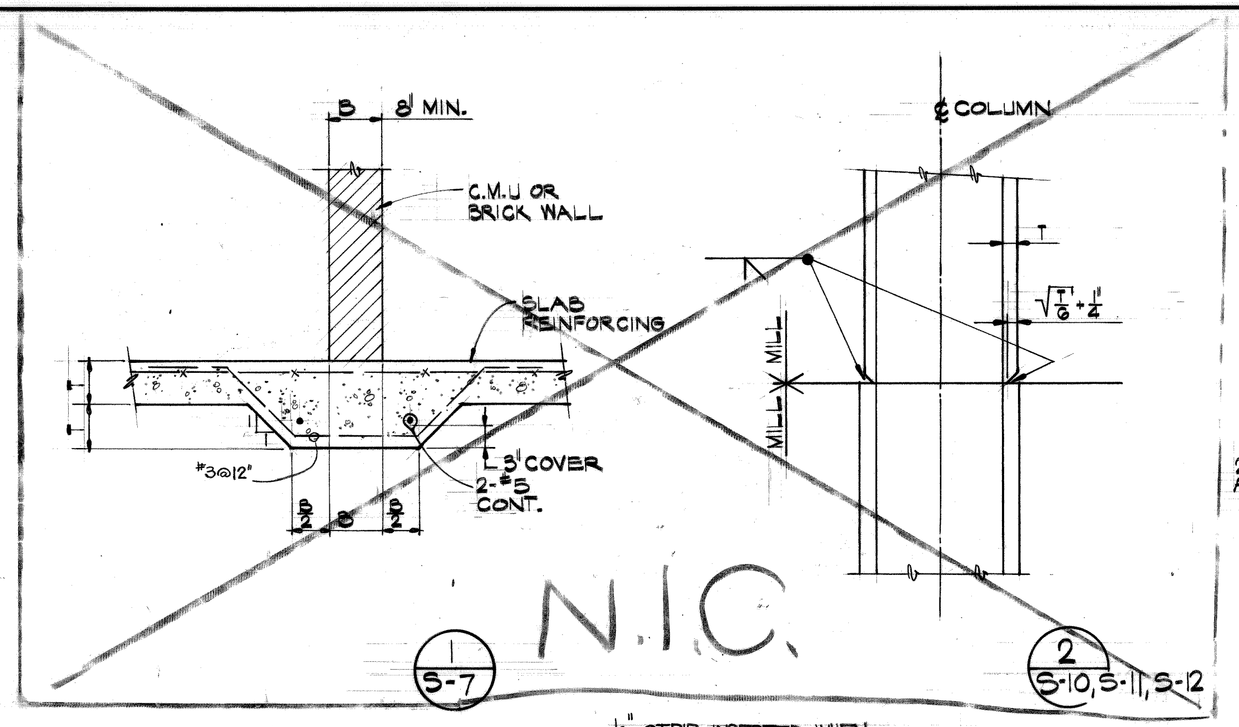

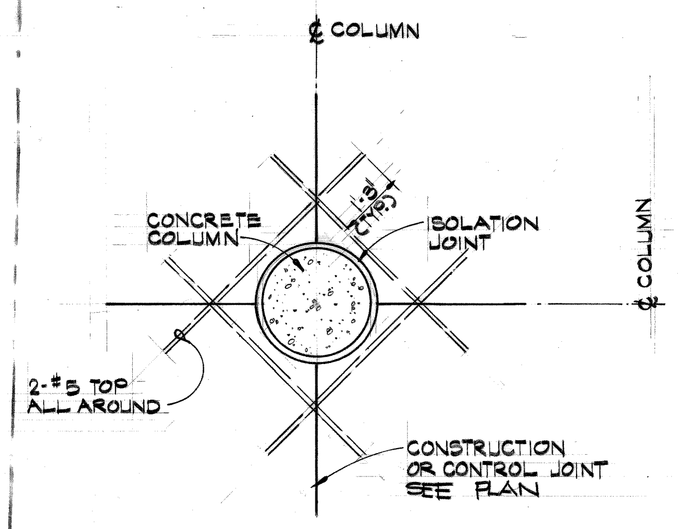

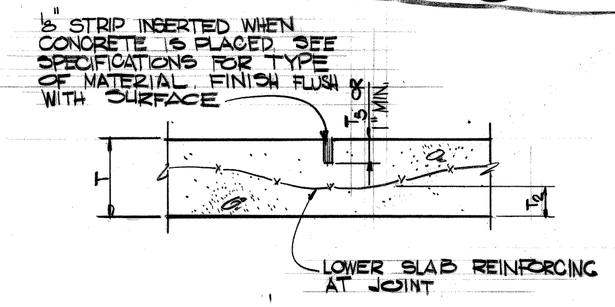

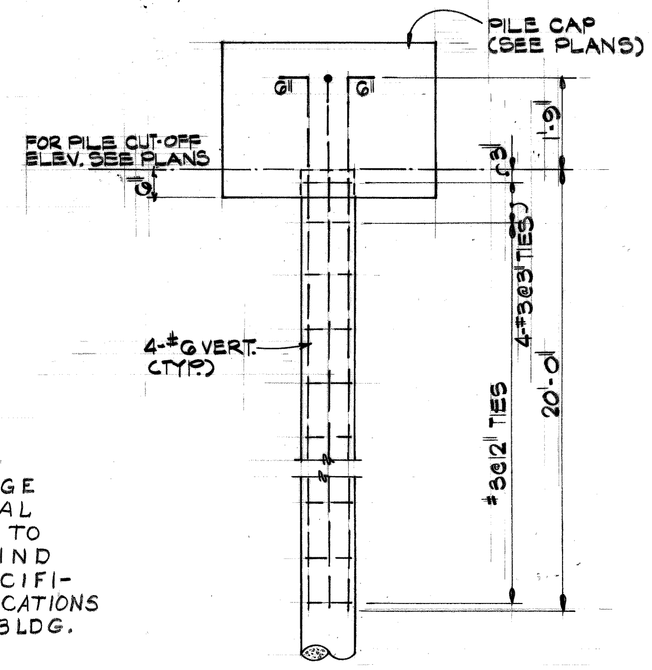

NOTE: THE DESIGN AND CONSTRUCTION OF THE BRIDGE STRUCTURES, EXCLUSIVE OF ARCHITECTURAL HOUSING AND DECORATION, WILL CONFORM TO THE CURRENT AASHTO SPECIFICATIONS AND M.D.O.T. STANDARD AND SUPPLEMENTAL SPECIFICATIONS AND PROVISIONS. THESE SPECIFICATIONS WILL TAKE PRECEDENCE OVER ANY OTHER BLDG. CODE OR SPECIFICATION.

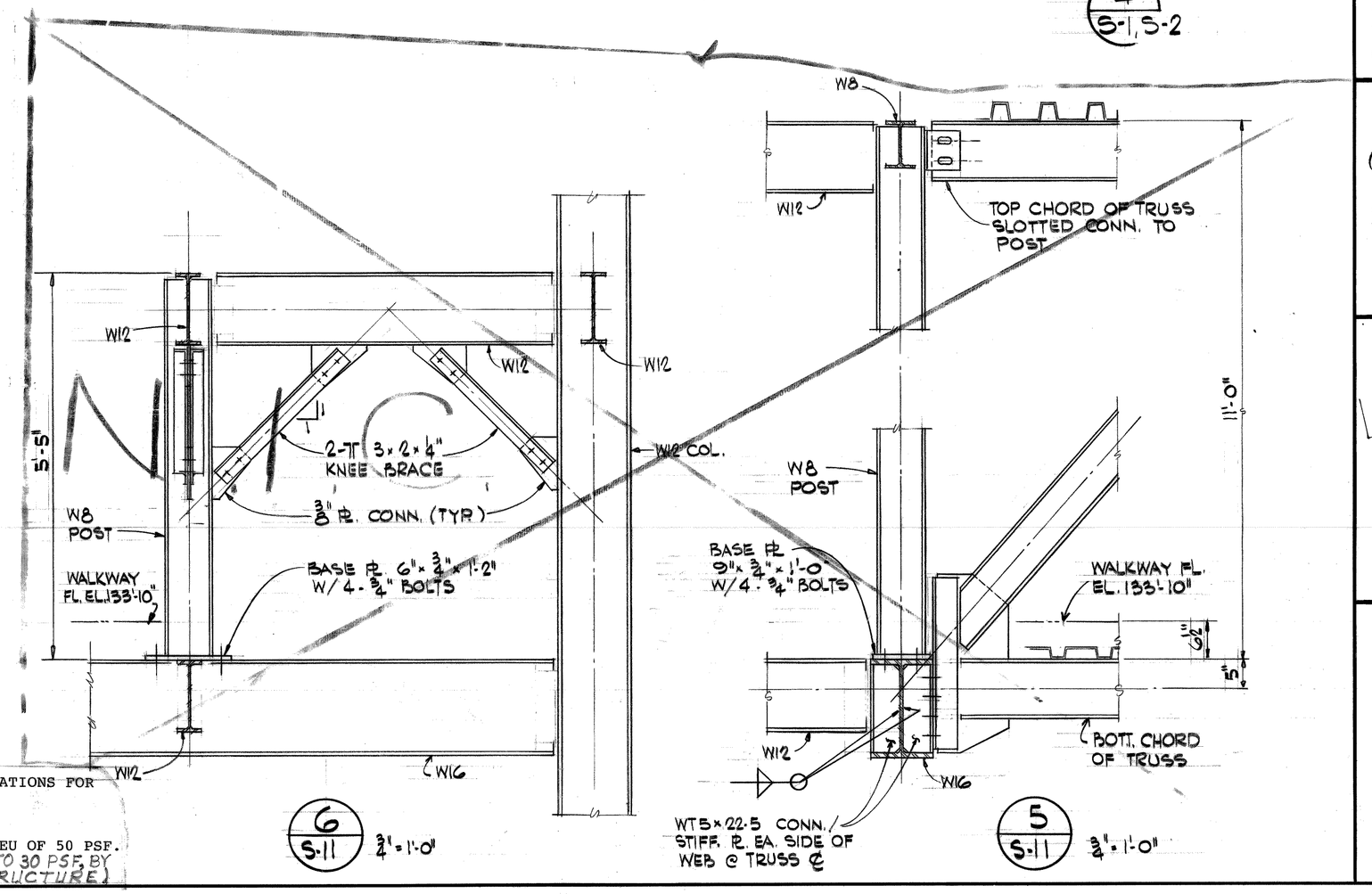

Joe Louis Sports Arena
Pedestrian Walkway
For City Engineering Division

SH&G
Smith, Hinchman & Grylls Associates, Inc.
Architects Engineers Planners
455 West Fort Street
Detroit, Michigan 48226
(313)964-3000
SH&G Job. No. 11732C

OWNER Issued For — 5-30-80 Date

1-18-80 Date — Drawn By
Div. Architect/Engineer
Correlation Check
Project Manager
Construction Administration Div. Approval
Division Approval

Key Plan

Detail Number / Location or Detail Sheet

N

Drawing Title
SECTIONS AND DETAILS

15031A Project No.
S-18 Drawing No.
Scale

9-26-79

MC/PRM• 71888

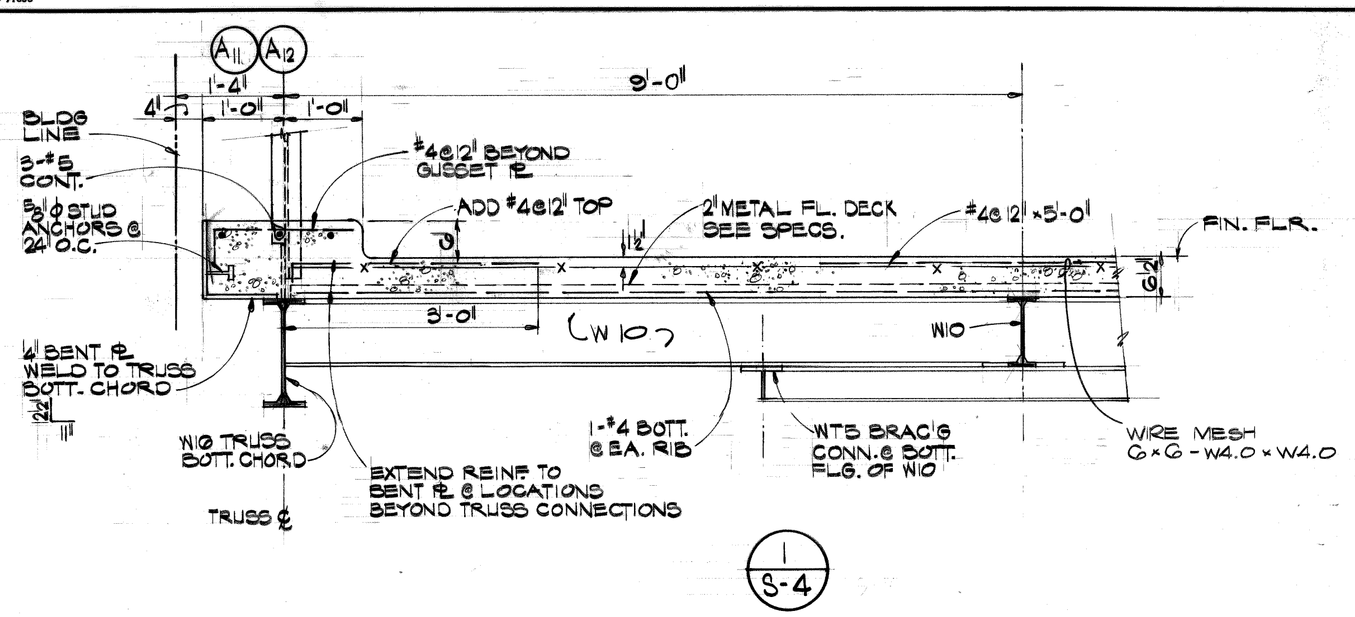

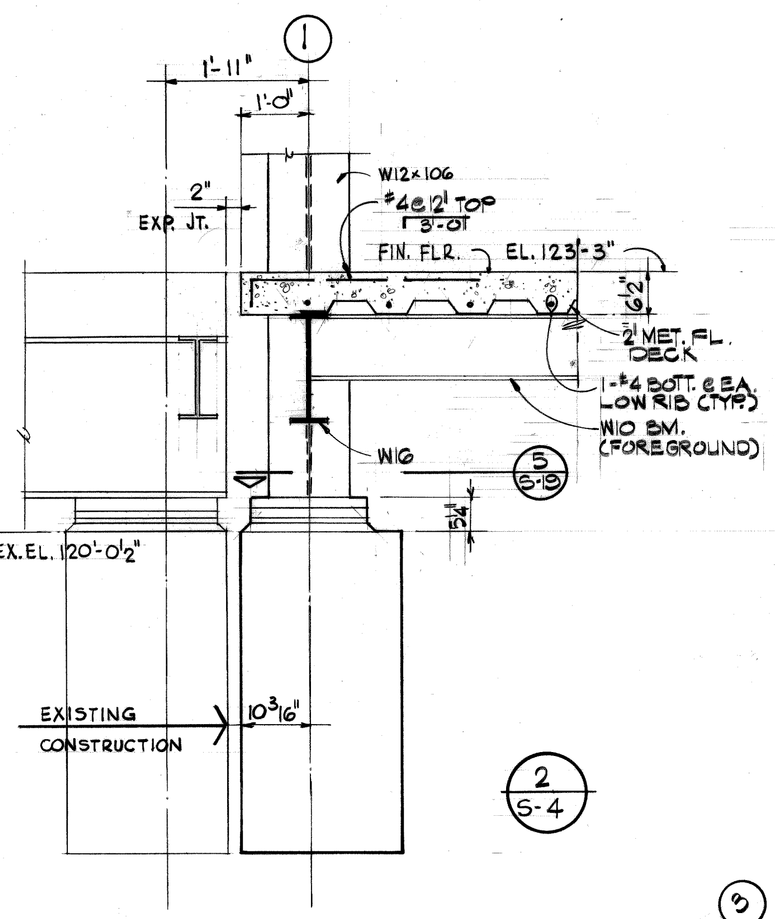

2
S-4

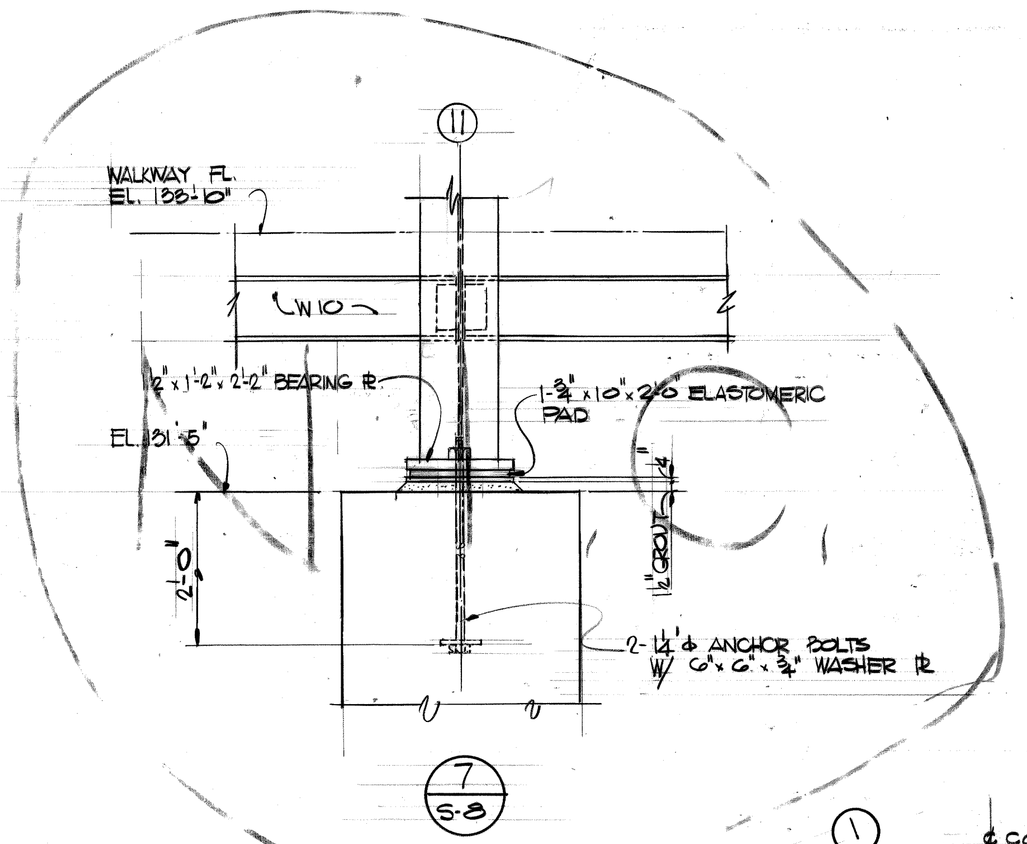

7
S-8

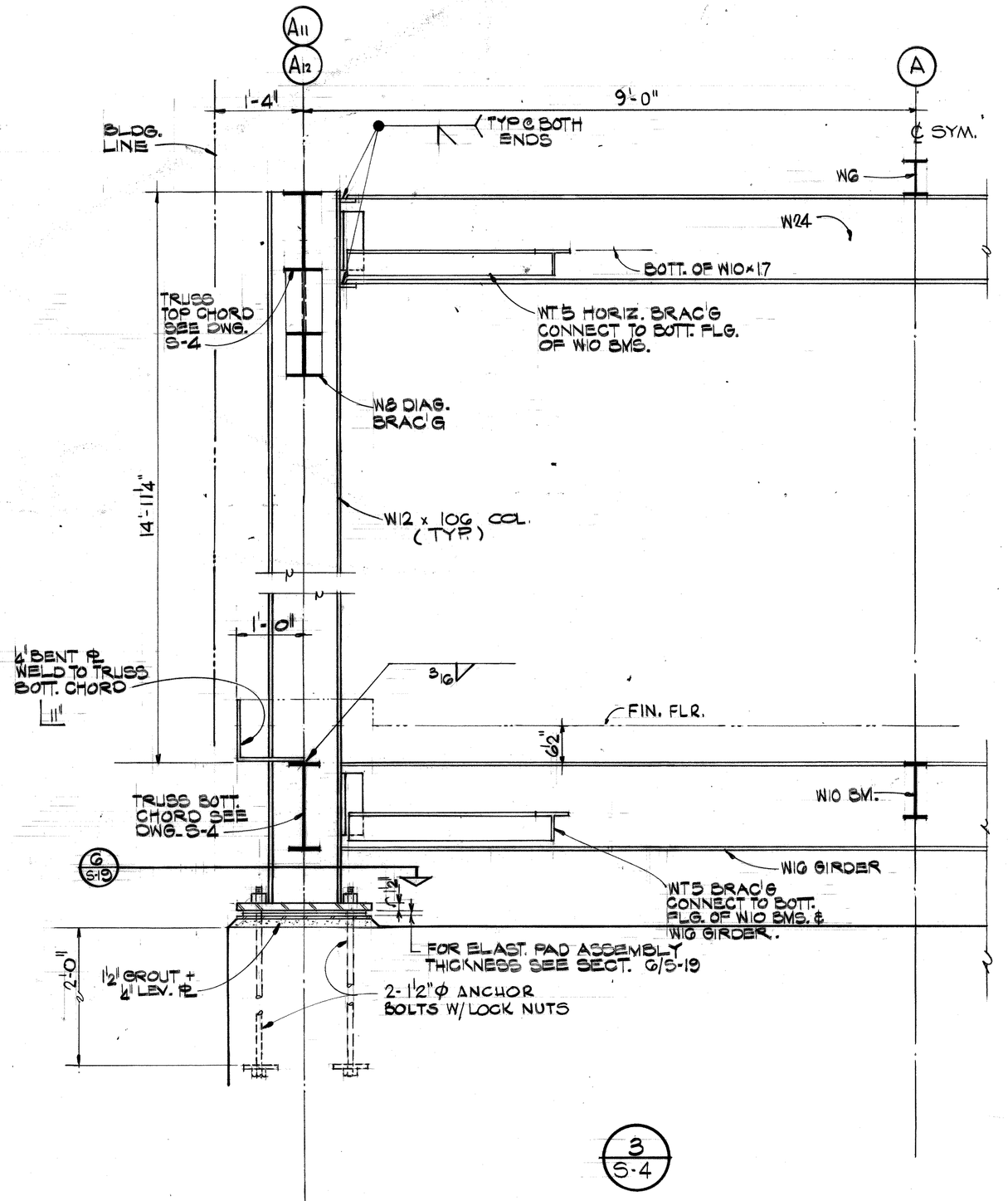

3
S-4

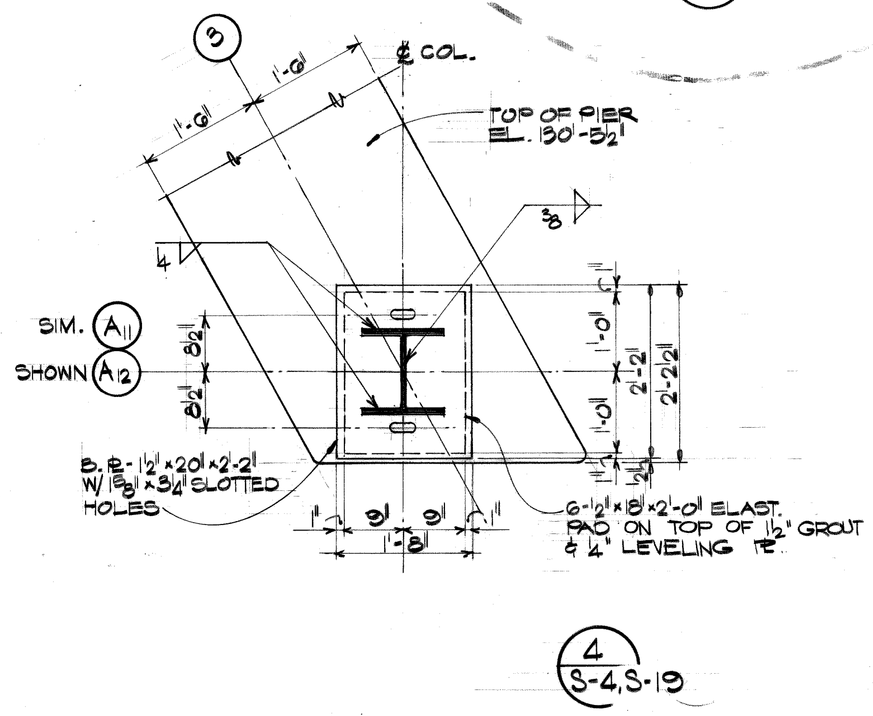

4
S-4, S-19

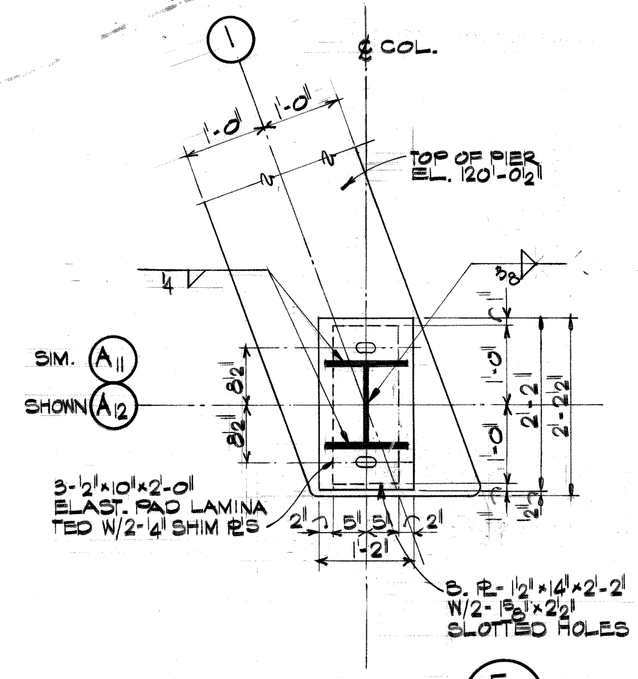

5
S-4, S-19

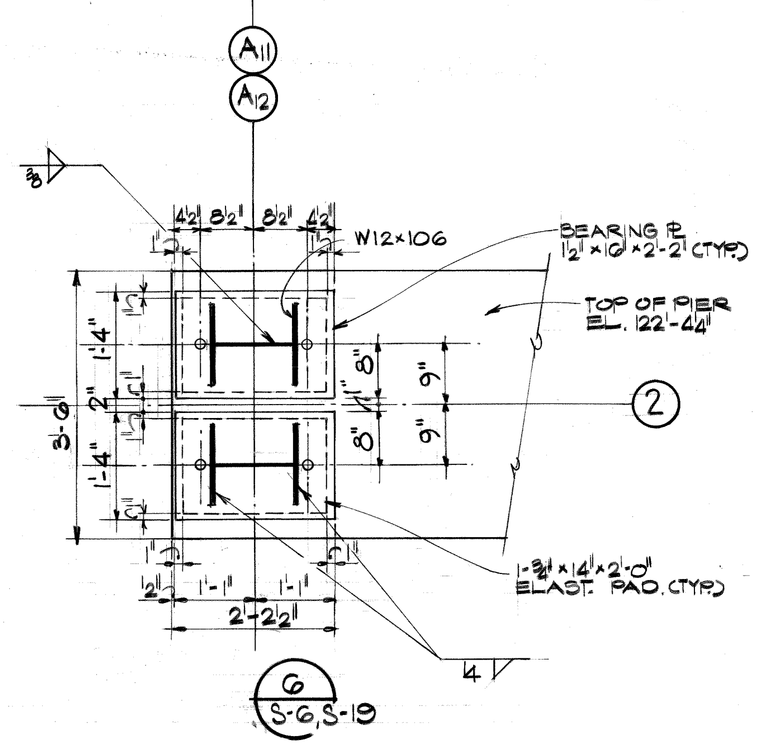

6
S-6, S-19

Joe Louis Sports Arena

Pedestrian Walkway

For City Engineering Division

SH&G
Smith, Hinchman & Grylls Associates, Inc.
Architects Engineers Planners
455 West Fort Street
Detroit, Michigan 48226
(313)964-3000

SH&G Job. No. 11732C

OWNER — Issued For — 5-30-80 — Date

1-18-80 — Date — Drawn By

Div. Architect/Engineer

Correlation Check

Project Manager

Construction Administrative Div. Approval

Division Approval

Key Plan

Detail Number / Location or Detail Sheet

N

Drawing Title
SECTIONS AND DETAILS

15031A Project No.

S-19 Drawing No.

3/4"=1'-0" U.O.N. Scale

9-26-79

MC/PRM+ 71858

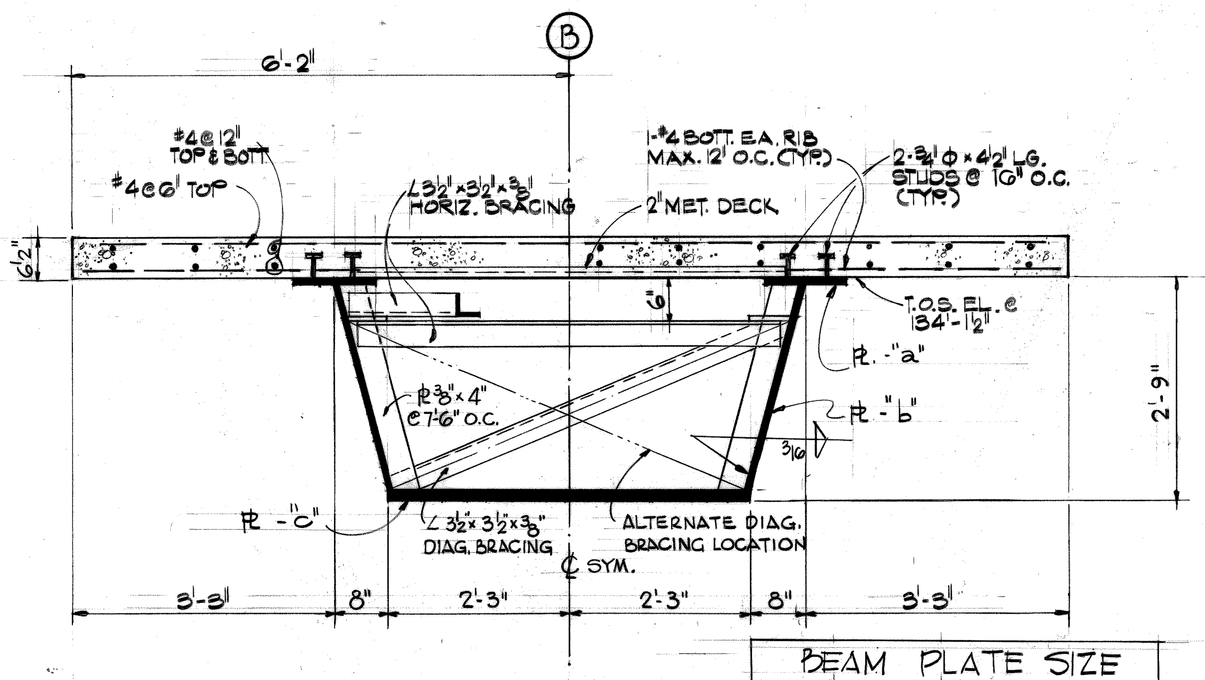

4 S-20

BEAM PLATE SIZE			
	PL-"a"	PL-"b"	PL-"c"
SB-1	½" x 1'-0"	½"	1" x 4'-6"
SB-2	1⅜" x 2'-4"	½"	2" x 4'-6"

NOTE: FOR SPANS GREATER THAN 60FT., THE CONTRACTOR MAY, AT HIS OPTION, ELECT TO SPLICE THE BOX GIRDER AT THE THIRD POINTS. ALL SPLICES WILL BE BOLTED SPLICES. THE SPLICE WILL BE DESIGNED BY THE CONTRACTOR AND SHALL CONFORM TO AASHTO AND MDOT SPECIFICATIONS FOR FRACTURE-CRITICAL MEMBERS. THE DESIGN AND DETAILS SHALL BE SUBMITTED TO THE ENGINEER FOR APPROVAL.

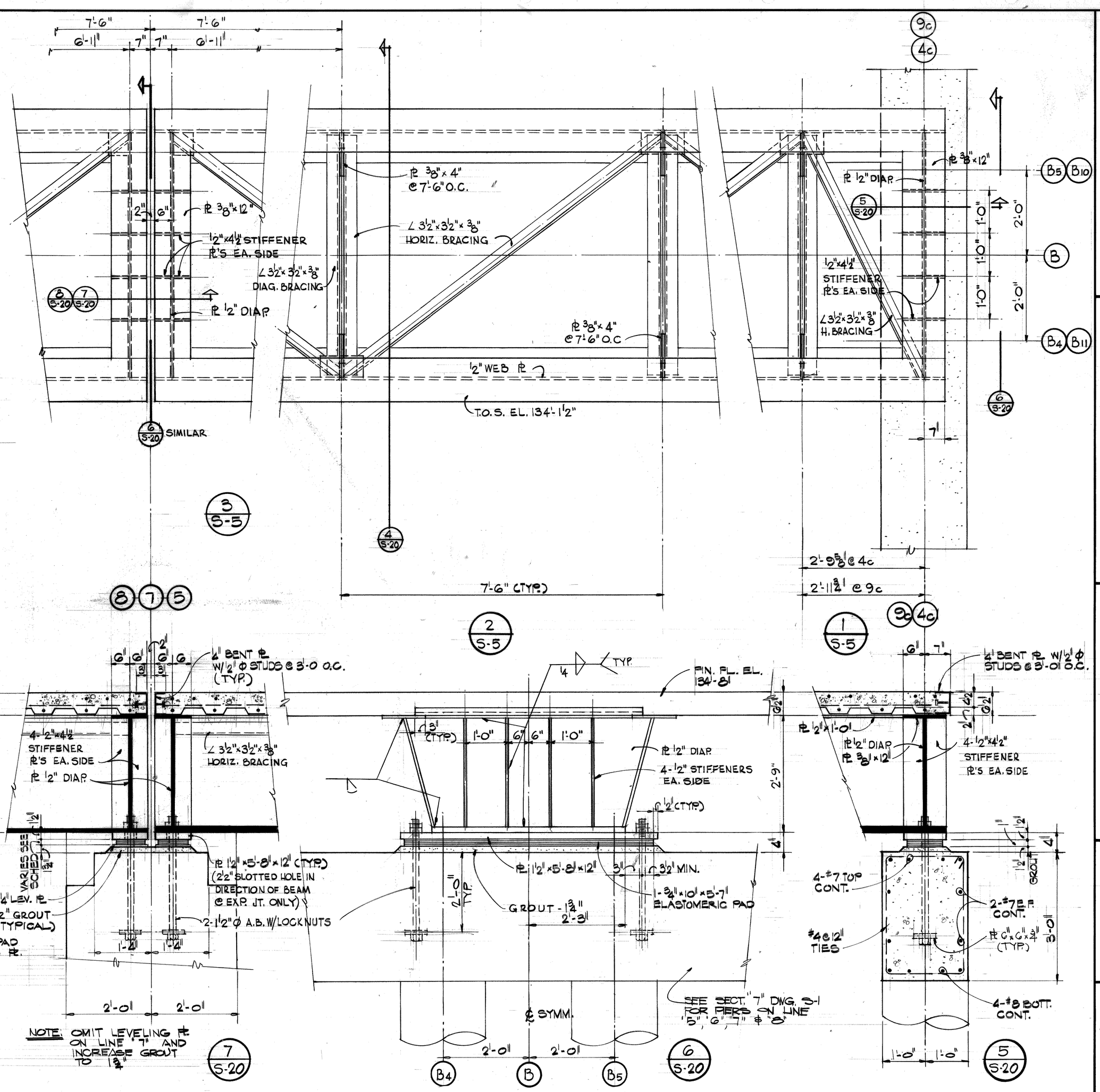

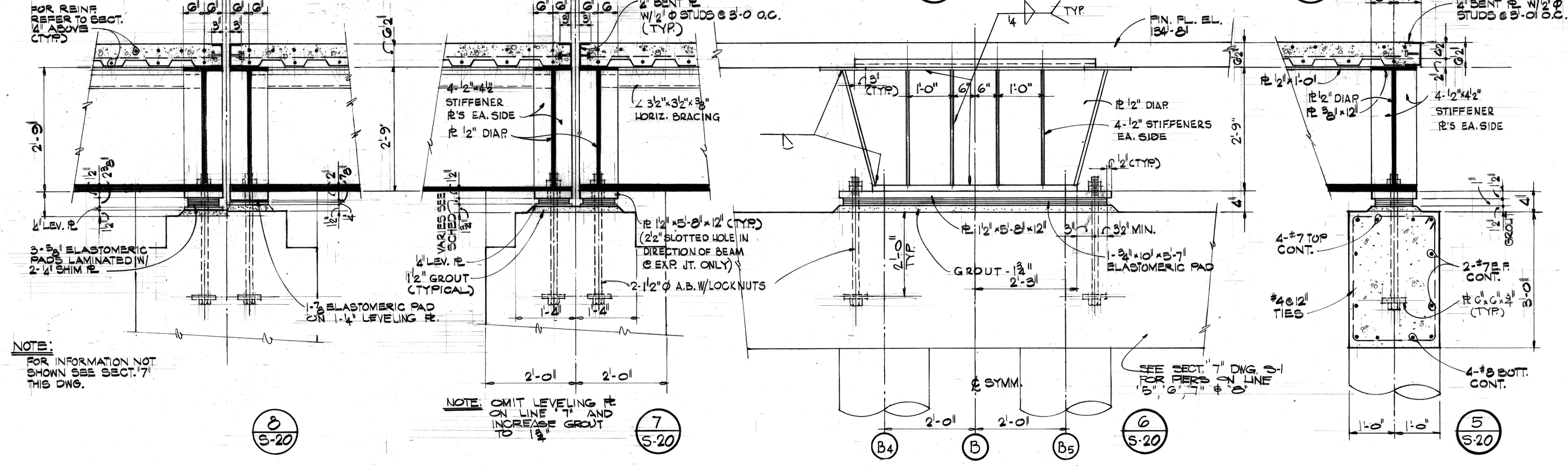

SCHED. OF BEARING THICKNESS		
℄ COL. LINE NO.	ELASTOMERIC PADS AND/OR SHIM PL'S	TOTAL THICKNESS
5	4-⅝" ELASTOMERIC PADS LAMINATED W/ 3-¼" SHIM PL'S	3¼"
6	SEE DETAIL "8" (THIS DWG.)	—
7	1-¾" ELASTOMERIC PAD	¾"
8	3-⅝" ELASTOMERIC PADS LAMINATED W/ 2-¼" SHIM PL'S	2⅜"

Joe Louis Sports Arena

Pedestrian Walkway

For City Engineering Division

SH&G
Smith, Hinchman & Grylls Associates, Inc.
Architects Engineers Planners
455 West Fort Street
Detroit, Michigan 48226
(313)964-3000

SH&G Job. No. 11732C

OWNER — Issued For — 5-30-80 Date

1-18-80 Date — Drawn By

Div. Architect/Engineer

Correlation/Check

Project Manager

Construction Administration Div. Approval

Division Approval

Key Plan

Detail Number / Location or Detail Sheet

N

Drawing Title

SECTIONS AND DETAILS

15031A Project No.

S-20 Drawing No.

3/4" = 1'-0" Scale

58 OF 96

9-26-79

MC/PRM# 71858

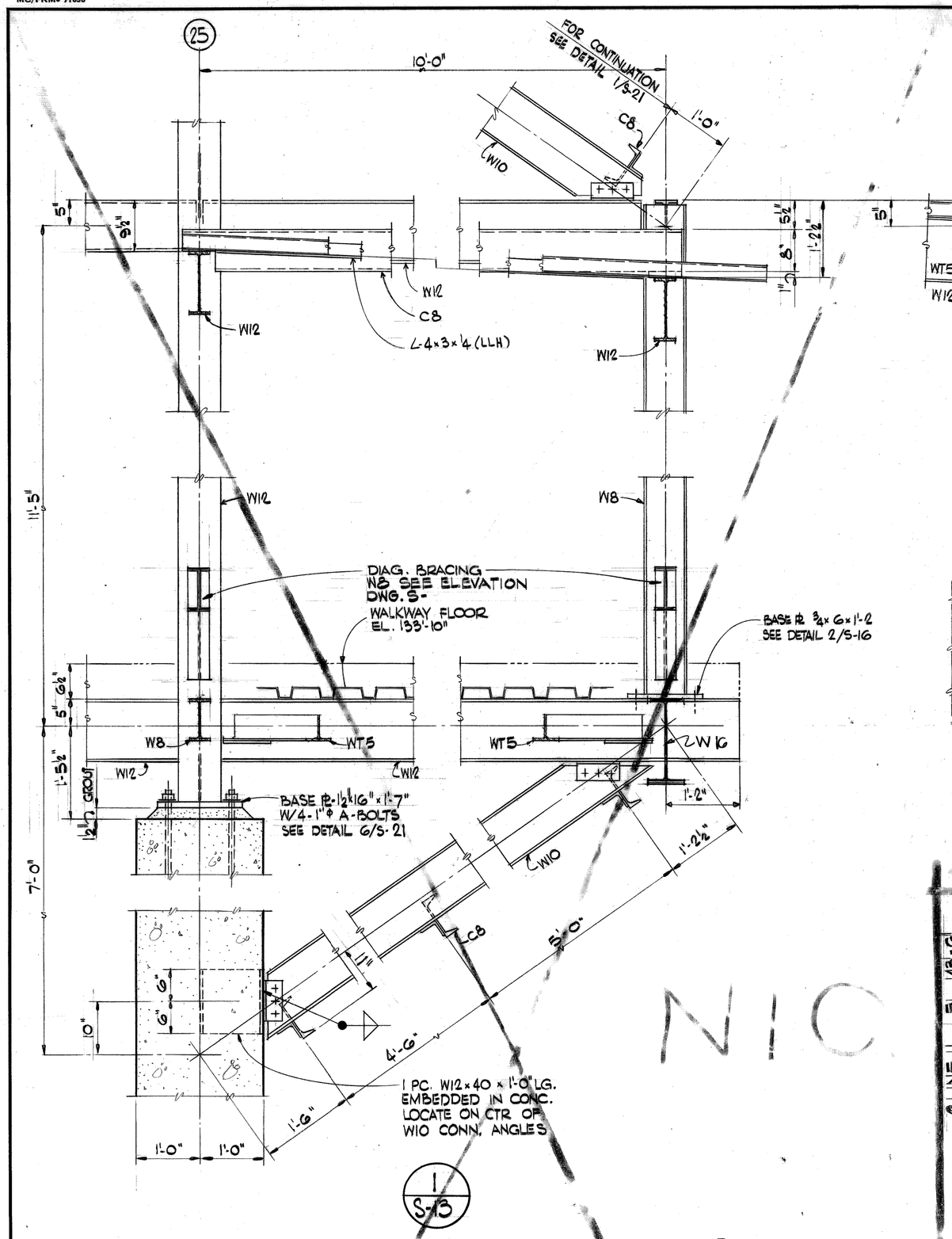

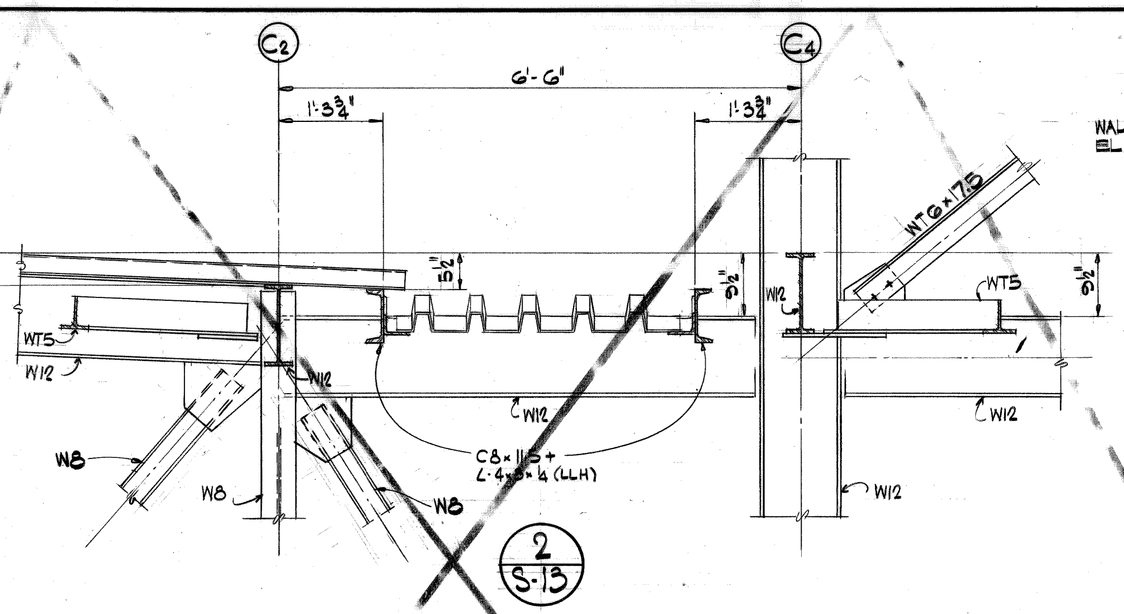

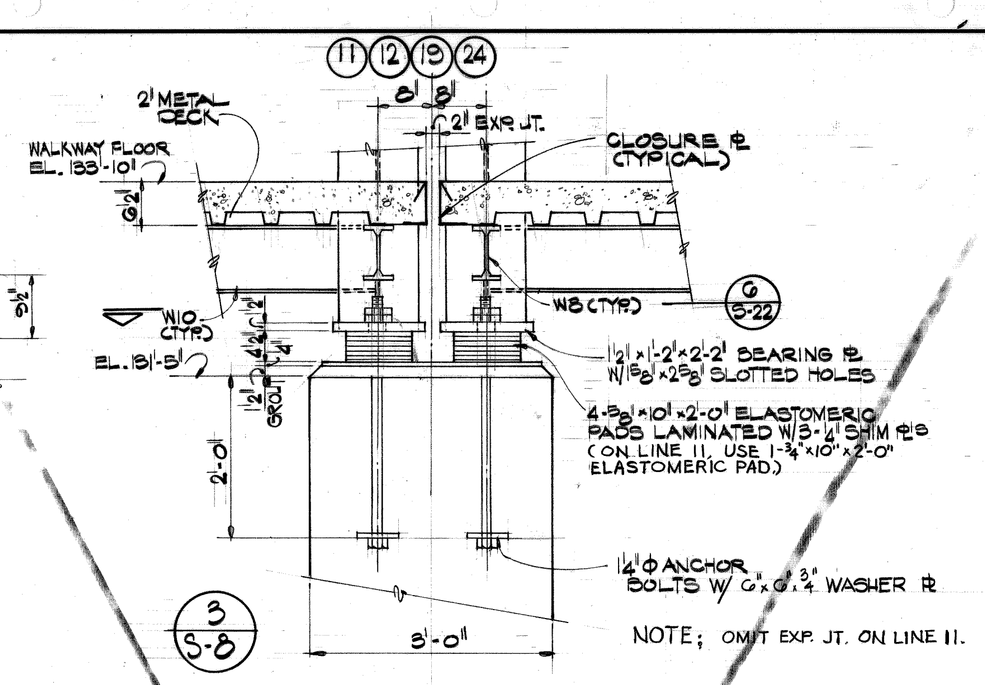

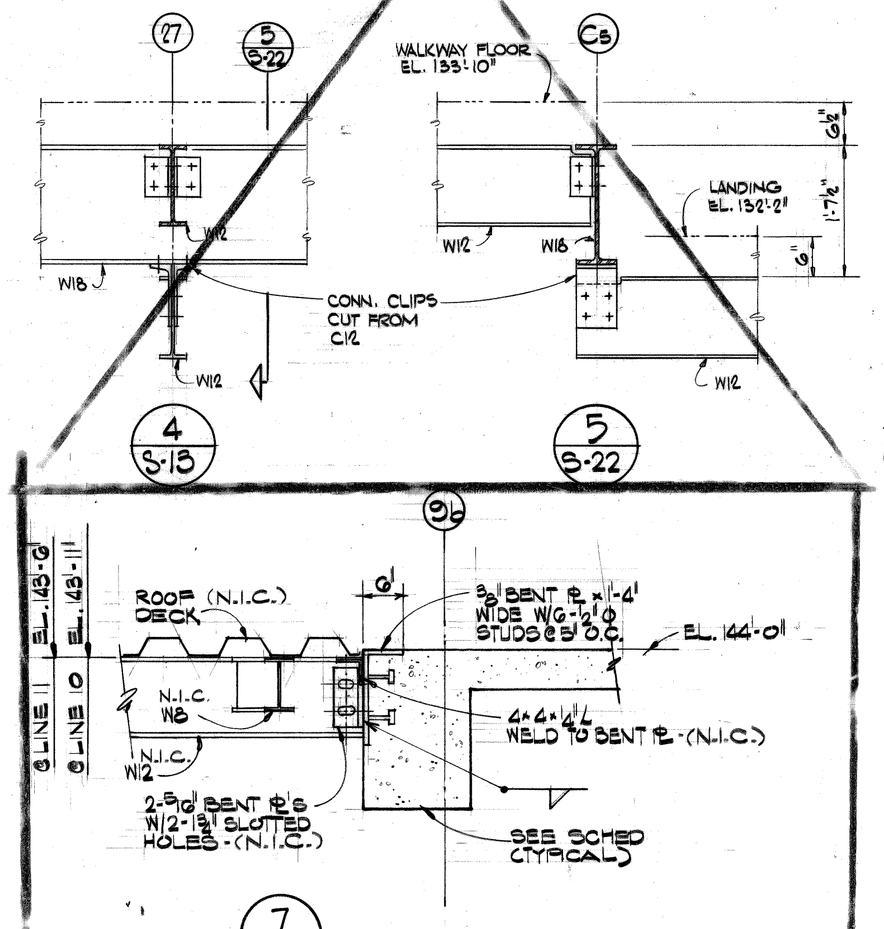

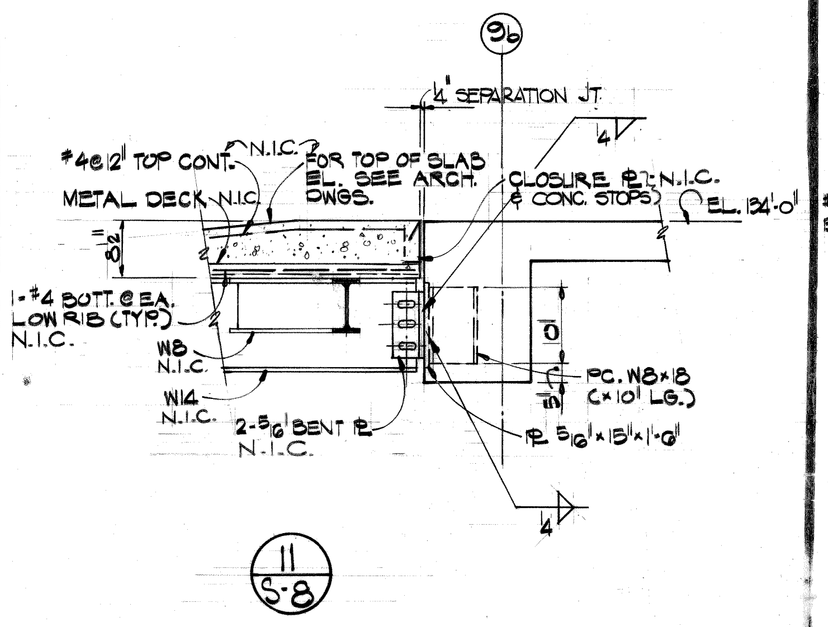

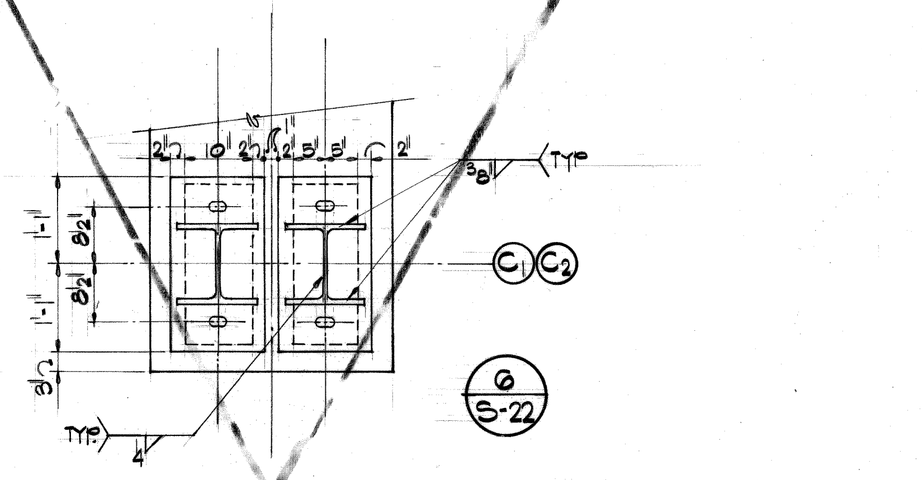

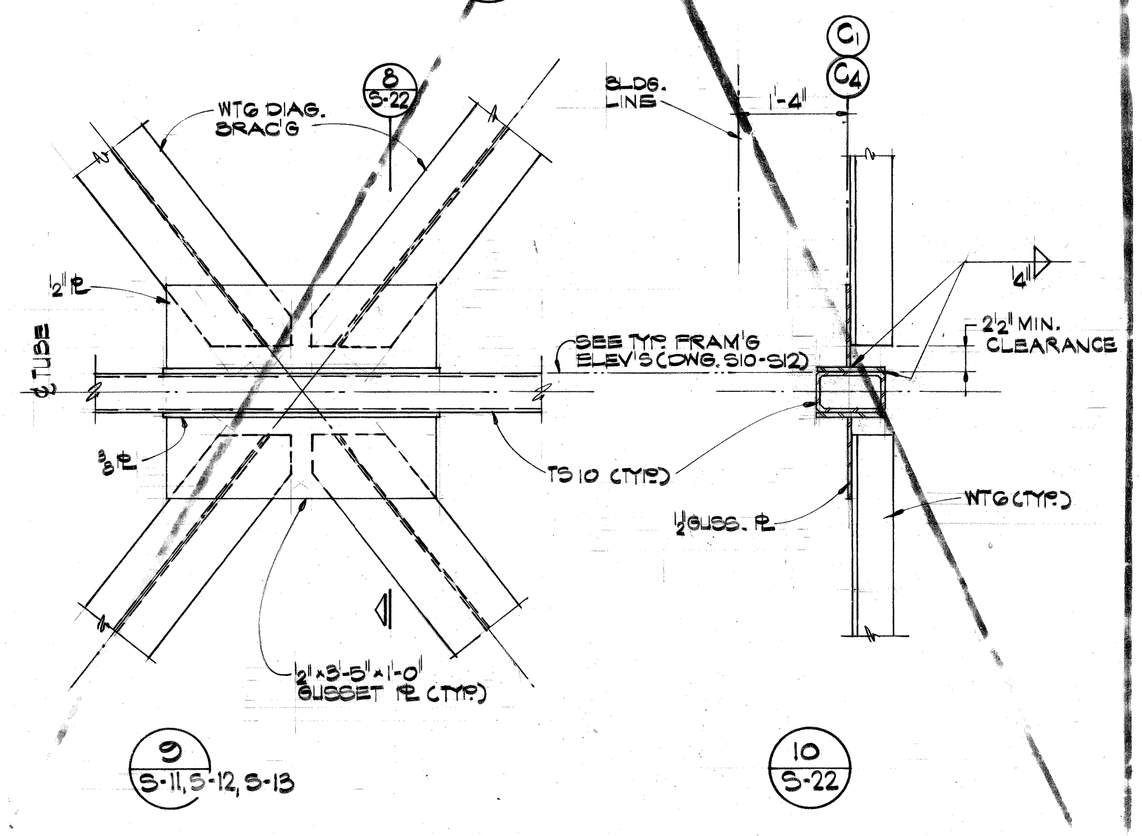

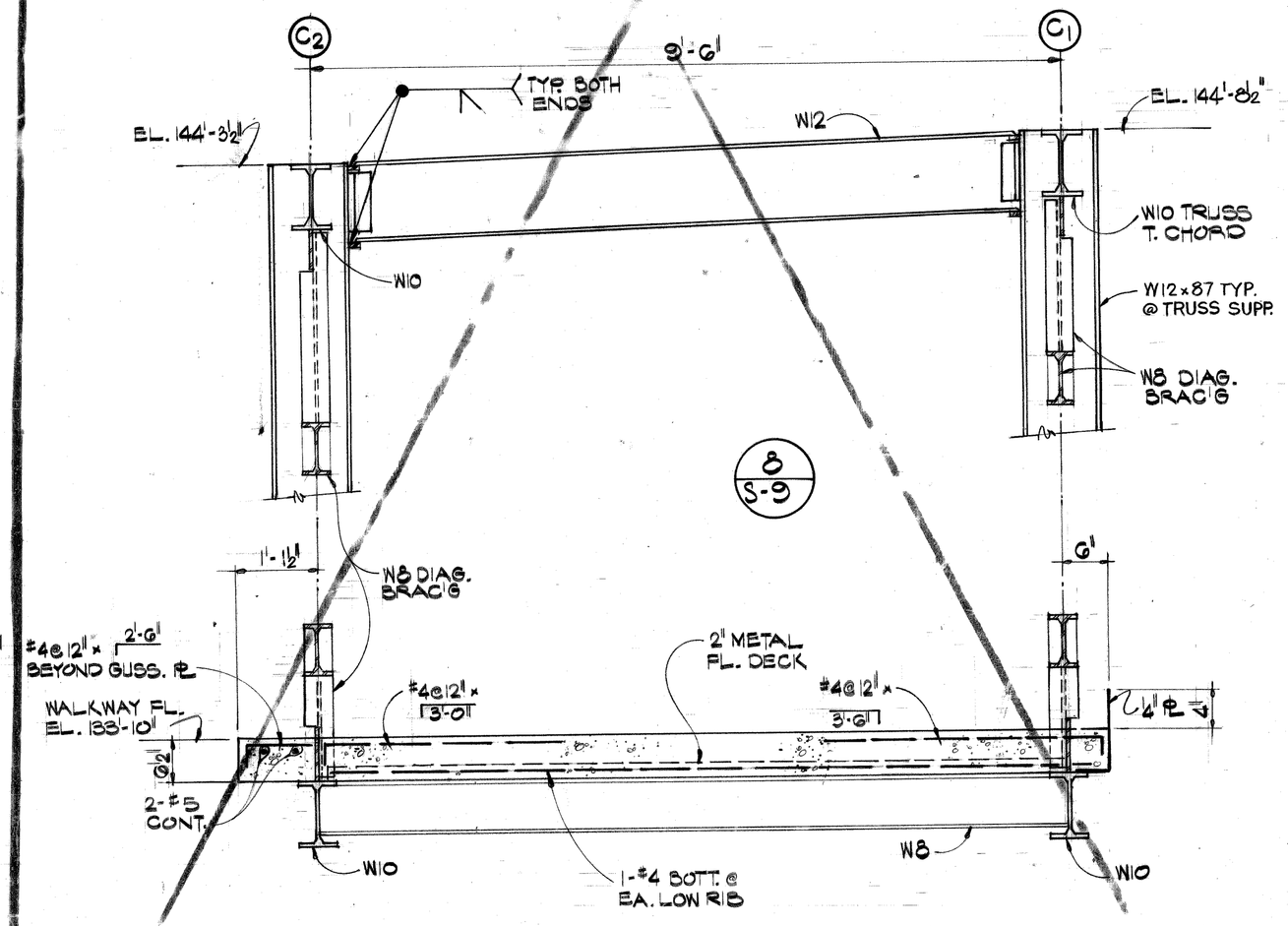

EXTENT OF CONTRACT

N.I.C.

Joe Louis Sports Arena

Pedestrian Walkway

For City Engineering Division

SH&G
Smith, Hinchman & Grylls Associates, Inc.
Architects Engineers Planners
455 West Fort Street
Detroit, Michigan 48226
(313)964-3000
SH&G Job. No. 11732C

OWNER — Issued For — 5-30-80 Date

1-18-80 Date — Drawn By

Dir. Architect/Engineer

Correlation Check

Project Manager

Construction Administrative Div. Approval

Division Approval

Key Plan

Detail Number / Location or Detail Sheet

N

Drawing Title
SECTIONS AND DETAILS

15031A Project No.

S-22 Drawing No.

Scale

59 OF 96

9-26-79

FAN SCHEDULE							
MARK	CFM	RPM	STATIC PRESS.	H.P.	REMARKS	BASED ON MANUFACTURER	MODEL No.
~~R.F.-1~~	~~5,500~~	~~525~~	~~3/8"~~	~~3/4~~	~~W/GRAVITY DAMPERS~~	~~POWER LINE FANS~~	~~300BEL8H~~
R.F.-2	6000	375	3/8"	3/4	" "	" "	365BEL8H
R.F.-3	2,265	1050	3/8"	1/3	" "	" "	165BEL8D
~~E.F.-1~~	~~15,000~~	~~580~~	~~3/8"~~	~~2~~	~~W/GRAVITY DAMPERS~~	~~POWER LINE FANS~~	~~42BV8M~~

N.I.C.

N.I.C.

NOTE:
1. ELECTRICAL CONTRACTOR SHALL PROVIDE FAN STARTERS AND THERMOSTAT WIRING.
2. THERMOSTATS SHALL BE HONEYWELL, LINE THERMOSTAT, SINGLE STAGE MODEL NO. T-451B.
3. FOR THERMOSTAT SETTING SEE THIS DWG.

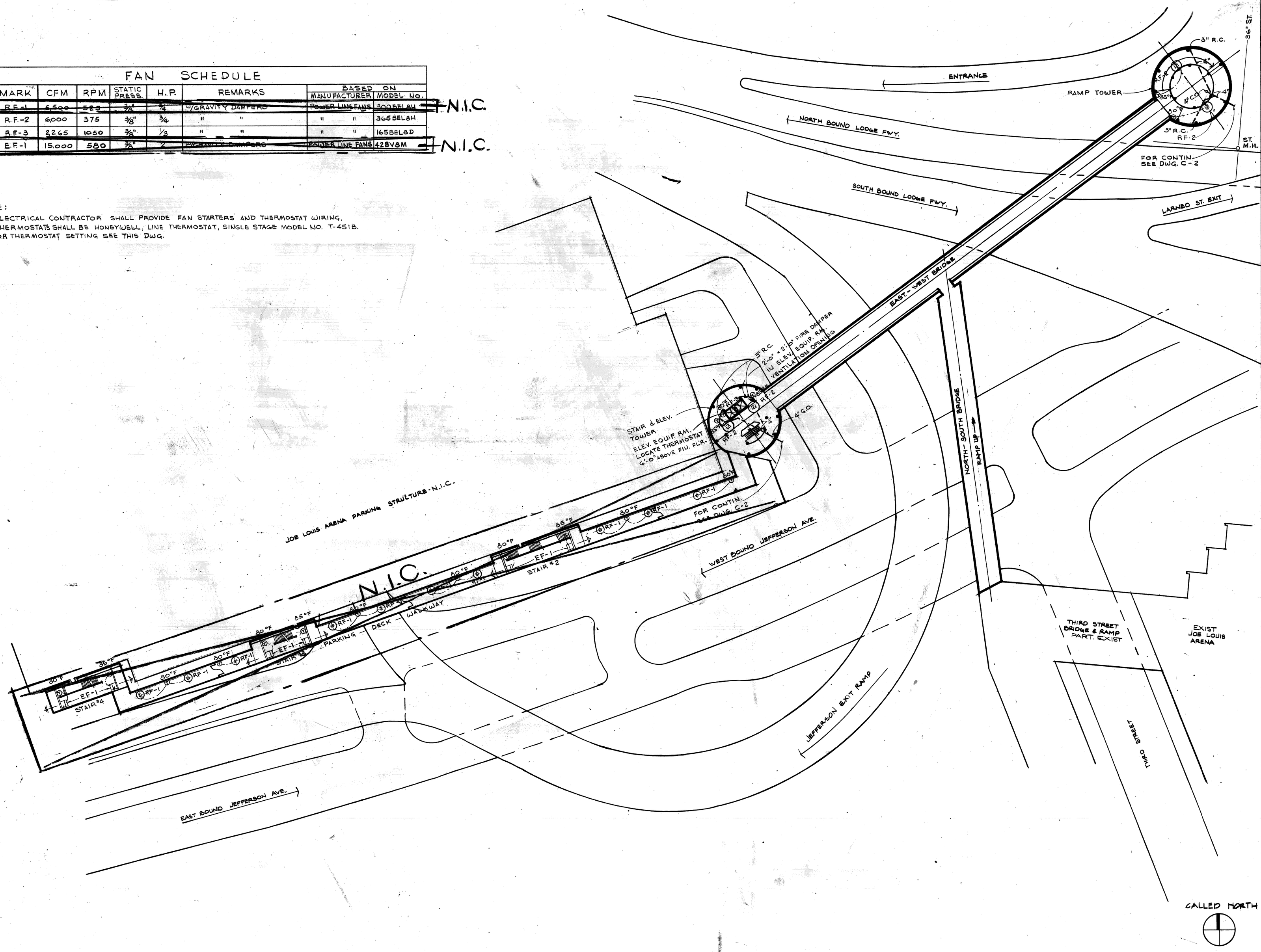

Joe Louis Sports Arena
Pedestrian Walkway
For City Engineering Division

SH&G
Smith, Hinchman & Grylls Associates, Inc.
Architects Engineers Planners
455 West Fort Street
Detroit, Michigan 48226
(313)964-3000

SH&G Job. No. 11732C

OWNER — Issued For
5-30-80 — Date

1-18-80 — Date
E.P. — Drawn By
Div. Architect/Engineer
Correlation Check
Project Manager
Construction Administrative Div. Approval
Division Approval

Key Plan

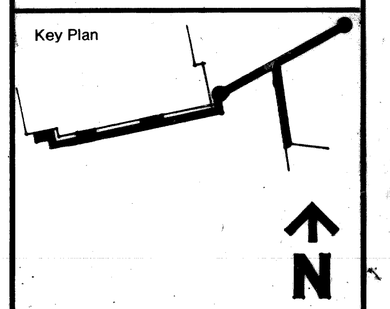

Drawing Title
COMPOSITE PLAN

15031A
Project No.
M-1
Drawing No.
1/32" = 1'-0"
Scale

MC/PRMD 71888

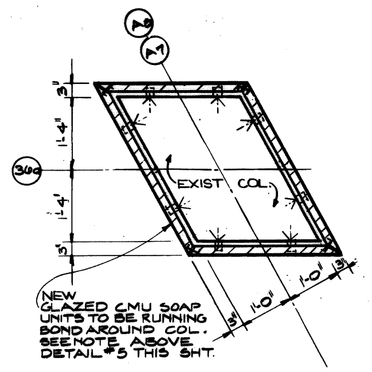

9 AM-1 PLAN 1/2" = 1'-0"

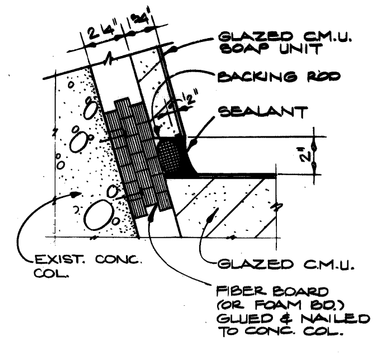

8 AM-1 PLAN - INSIDE CORNER @ EXP. JOINT 2" = 1'-0"

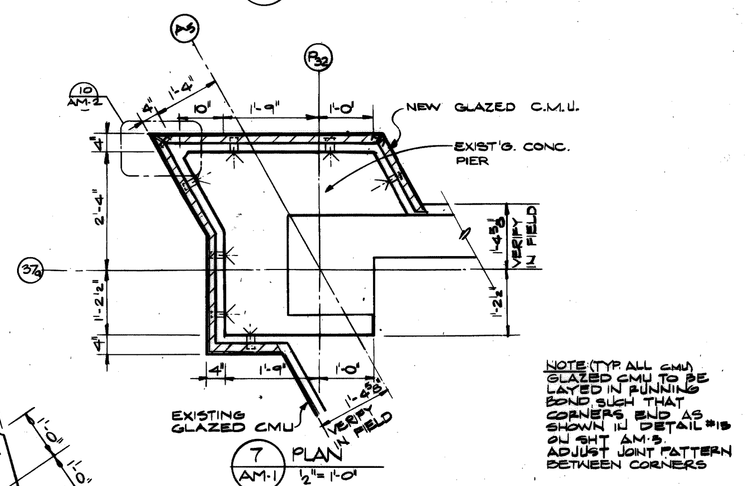

7 AM-1 PLAN 1/2" = 1'-0"

NOTE: TYP. ALL GMU GLAZED CMU TO BE LAYED IN RUNNING BOND SUCH THAT CORNERS END AS SHOWN IN DET'S 15, SHT AM-3. ADJUST JOINT PATTERN BETWEEN CORNERS

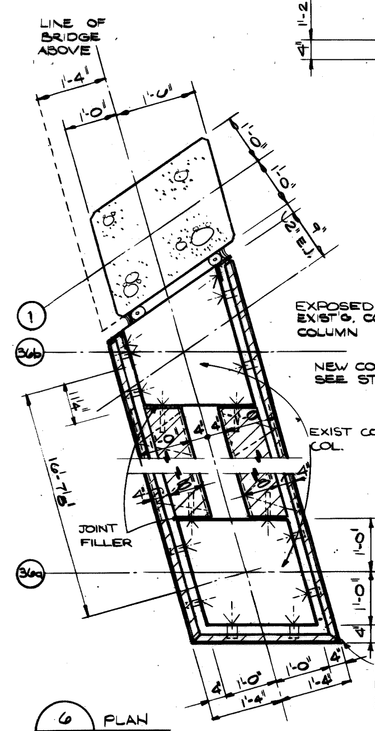

6 AM-1 PLAN 1/2" = 1'-0"

5 AM-1 PLAN 1/2" = 1'-0"

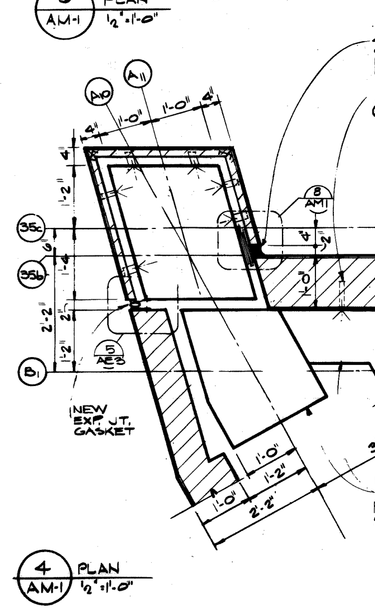

4 AM-1 PLAN 1/2" = 1'-0"

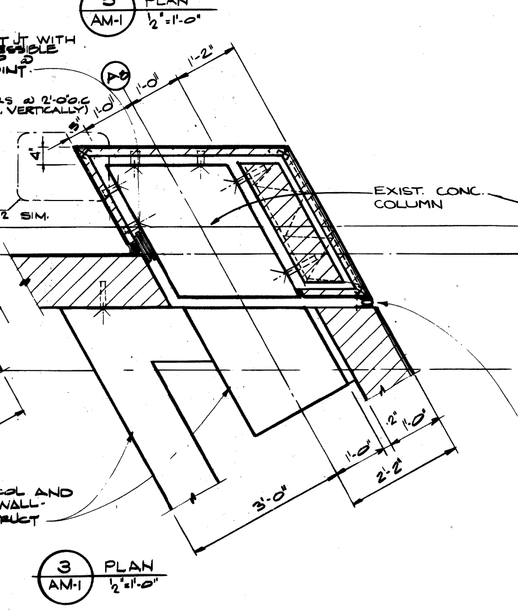

3 AM-1 PLAN 1/2" = 1'-0"

2 AM-1 PLAN 1/2" = 1'-0"

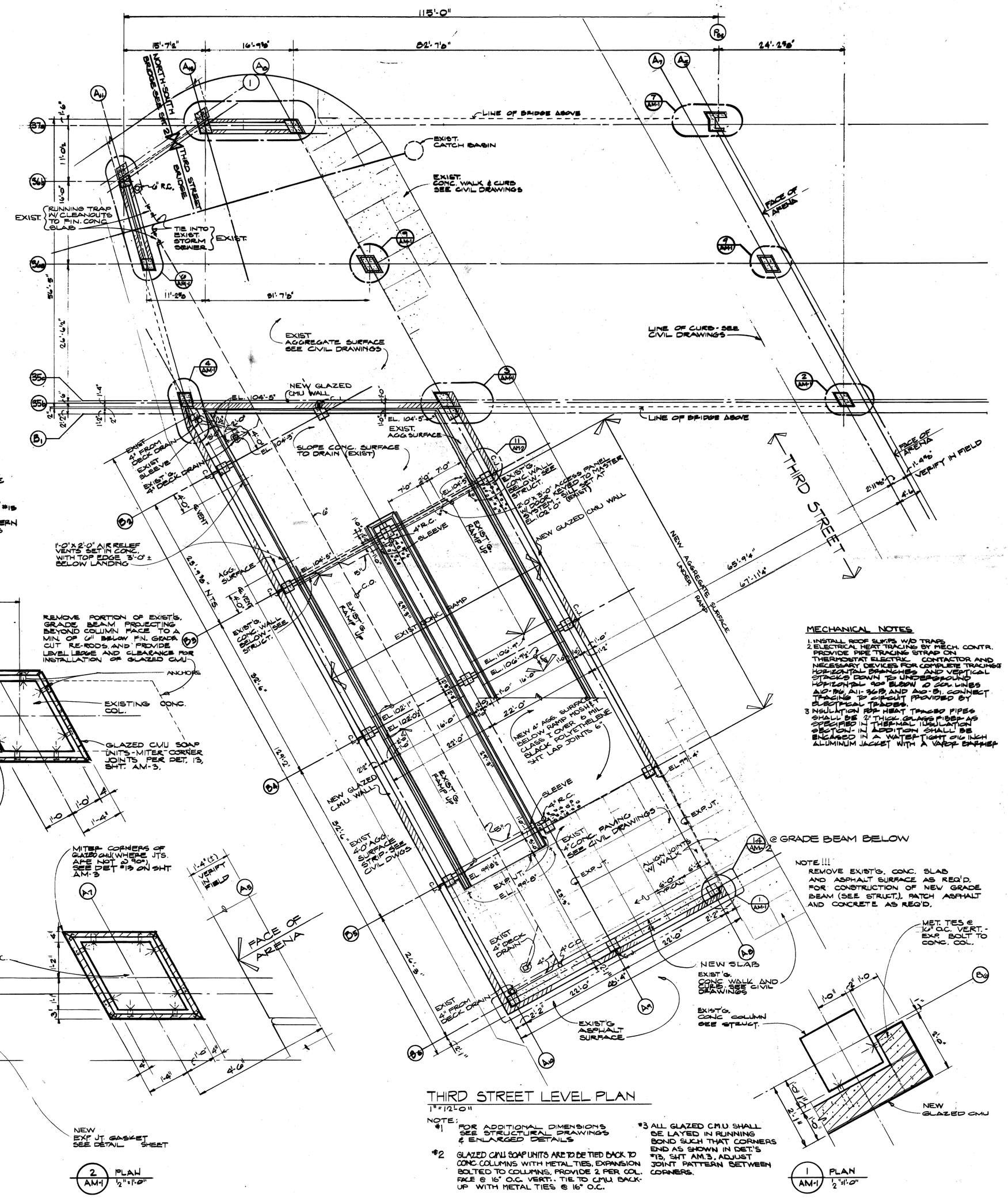

THIRD STREET LEVEL PLAN
1" = 1'-0"

NOTE:
#1 FOR ADDITIONAL DIMENSIONS SEE STRUCTURAL DRAWINGS & ENLARGED DETAILS

#2 GLAZED CMU SOAP UNITS ARE TO BE TIED BACK TO CONC. COLUMNS WITH METAL TIES, EXPANSION BOLTED TO COLUMNS, PROVIDE 2 PER COL. FACE @ 16" O.C. VERT.. TIE TO CMU BACK-UP WITH METAL TIES @ 16" O.C.

#3 ALL GLAZED CMU SHALL BE LAYED IN RUNNING BOND SUCH THAT CORNERS END AS SHOWN IN DET'S #15, SHT. AM-3. ADJUST JOINT PATTERN BETWEEN CORNERS.

MECHANICAL NOTES
1. INSTALL ROOF SLEEVES W/O TRAPS.
2. ELECTRICAL HEAT TRACING BY MECH. CONTR. PROVIDE PIPE TRACING STRAP ON THERMOSTAT ELECTRIC CONTACTOR AND NECESSARY DEVICES FOR COMPLETE TRACINGS HORIZONTAL BRANCHES AND VERTICAL STACKS DOWN TO UNDERGROUND HORIZONTAL AS SHOWN O SOIL LINES AG-PW, A11-SVP, AND AG-SP. CONNECT TRACING TO CIRCUIT PROVIDED BY ELECTRICAL TRADES.
3. INSULATION FOR HEAT TRACED PIPES SHALL BE OF THICKNESS AS SPECIFIED IN THERMAL INSULATION SECTION. IN ADDITION SHALL BE ENCASED IN A WATER TIGHT .016 INCH ALUMINUM JACKET WITH A VAPOR BARRIER

Joe Louis Sports Arena
Pedestrian Walkway
For City Engineering Division

SH&G
Smith, Hinchman & Grylls Associates, Inc.
Architects Engineers Planners
455 West Fort Street
Detroit, Michigan 48226
(313)964-3000
SH&G Job. No. 11732C

OWNER — Issued For — 5-30-80 — Date

10-2-79 — Date — B.F., M.D. — Drawn By
Div. Architect/Engineer
Correlation Check
Project Manager
Construction Administration Div. Approval
Division Approval

Key Plan

Detail Number / Location or Detail Sheet

N

Drawing Title
ARENA BRIDGE AND RAMP THIRD STREET LEVEL PLAN AND DETAILS
15031A
Project No.
AM-1
Drawing No.
AS NOTED
Scale
61 OF 936

9-26-79

MC/Print 21880

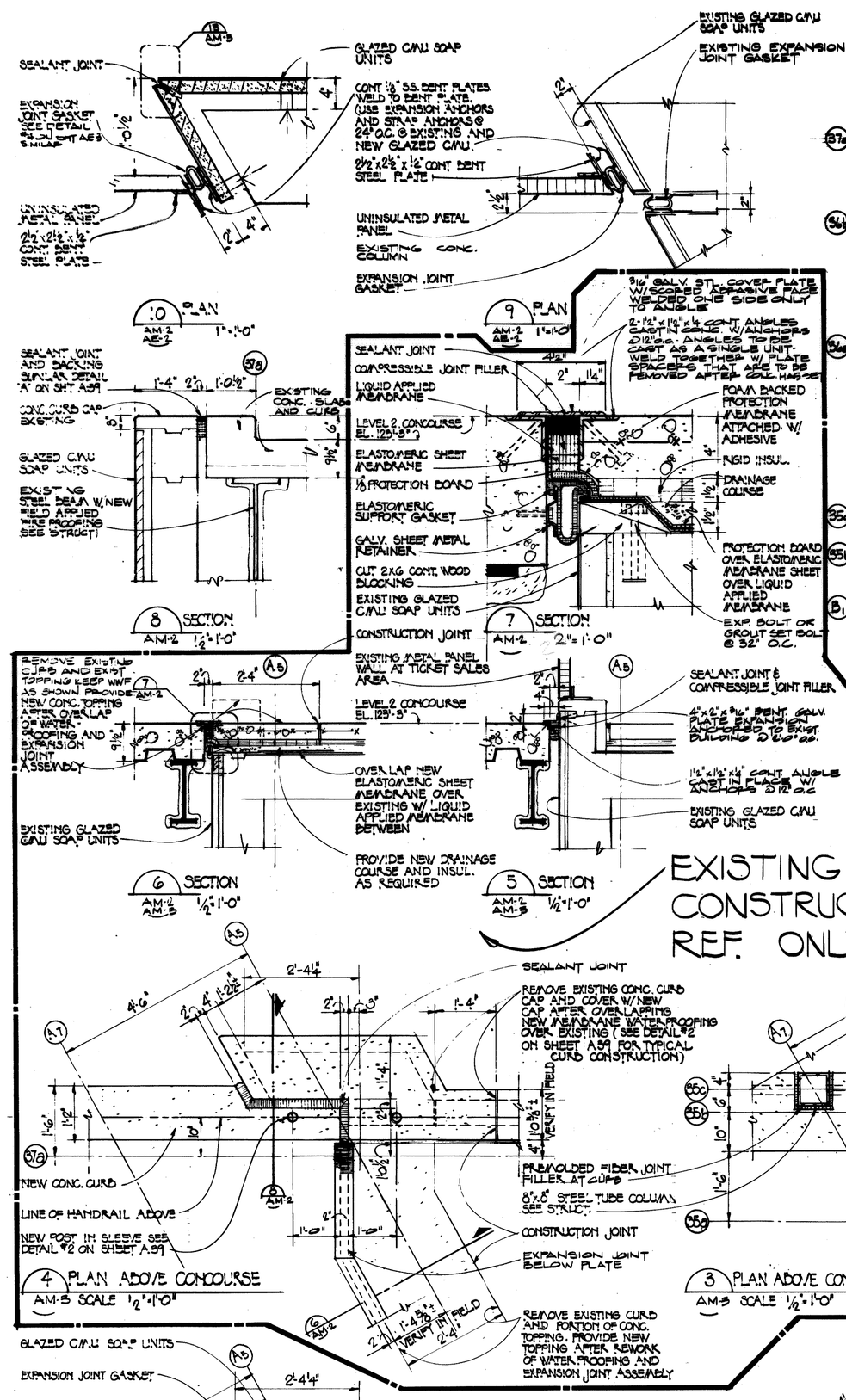

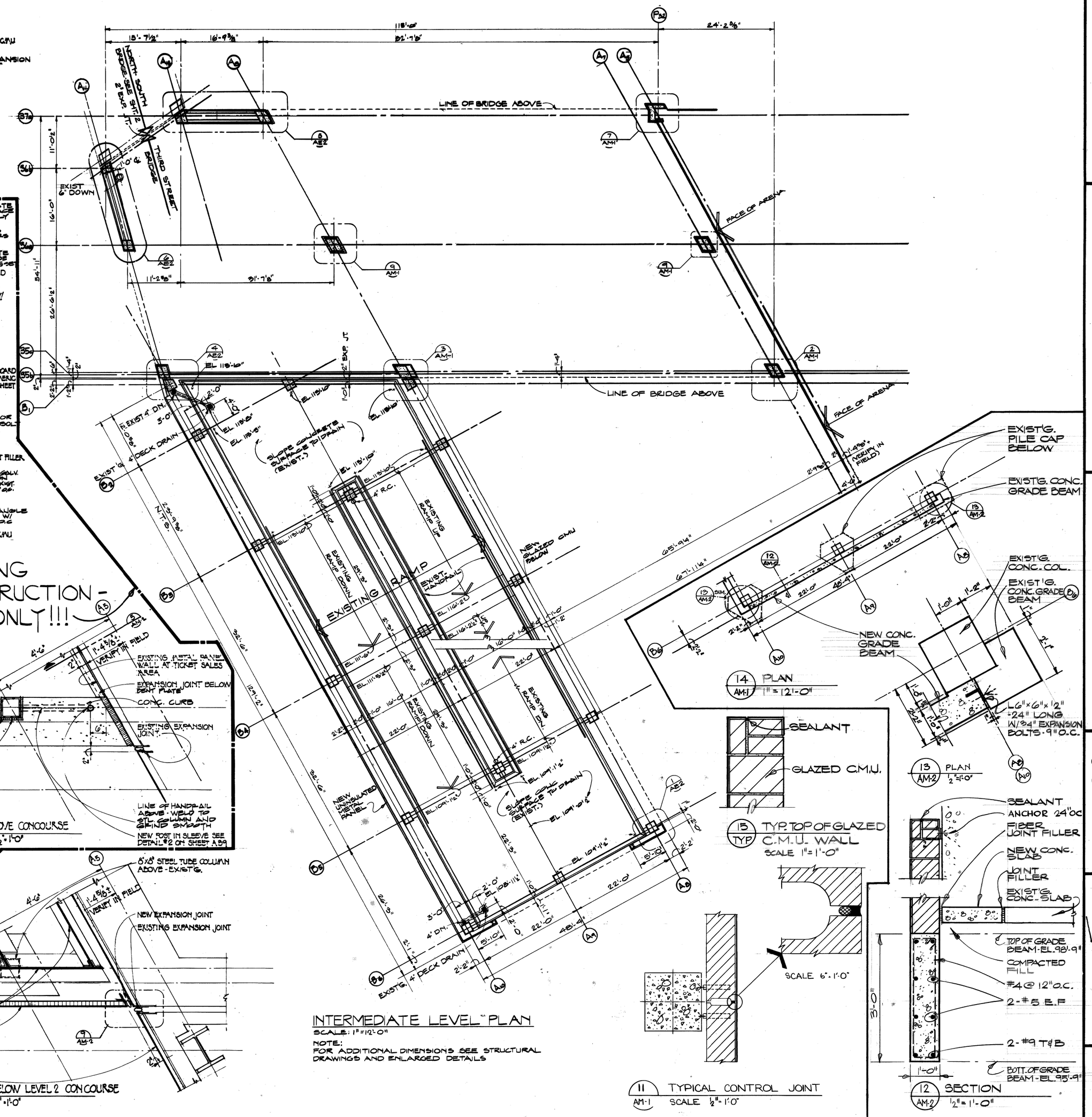

Joe Louis Sports Arena

Pedestrian Walkway

For City Engineering Division

SH&G
Smith, Hinchman & Grylls Associates, Inc.
Architects Engineers Planners
455 West Fort Street
Detroit, Michigan 48226
(313)964-3000
SH&G Job. No. 11732C

OWNER — Issued For — 5-30-80 Date

0-2-79 Date — T.D. - M.D. Drawn By

Div. Architect/Engineer

Correlation Check

Project Manager

Construction Administration Only Approval

Division Approval

Key Plan

Detail Number / Location or Detail Sheet

N

Drawing Title
ARENA BRIDGE AND RAMP INTERMEDIATE LEVEL PLAN AND DETAILS

15031A
Project No.

AM-2
Drawing No.

AS NOTED
Scale

62 OF 96

9-26-79

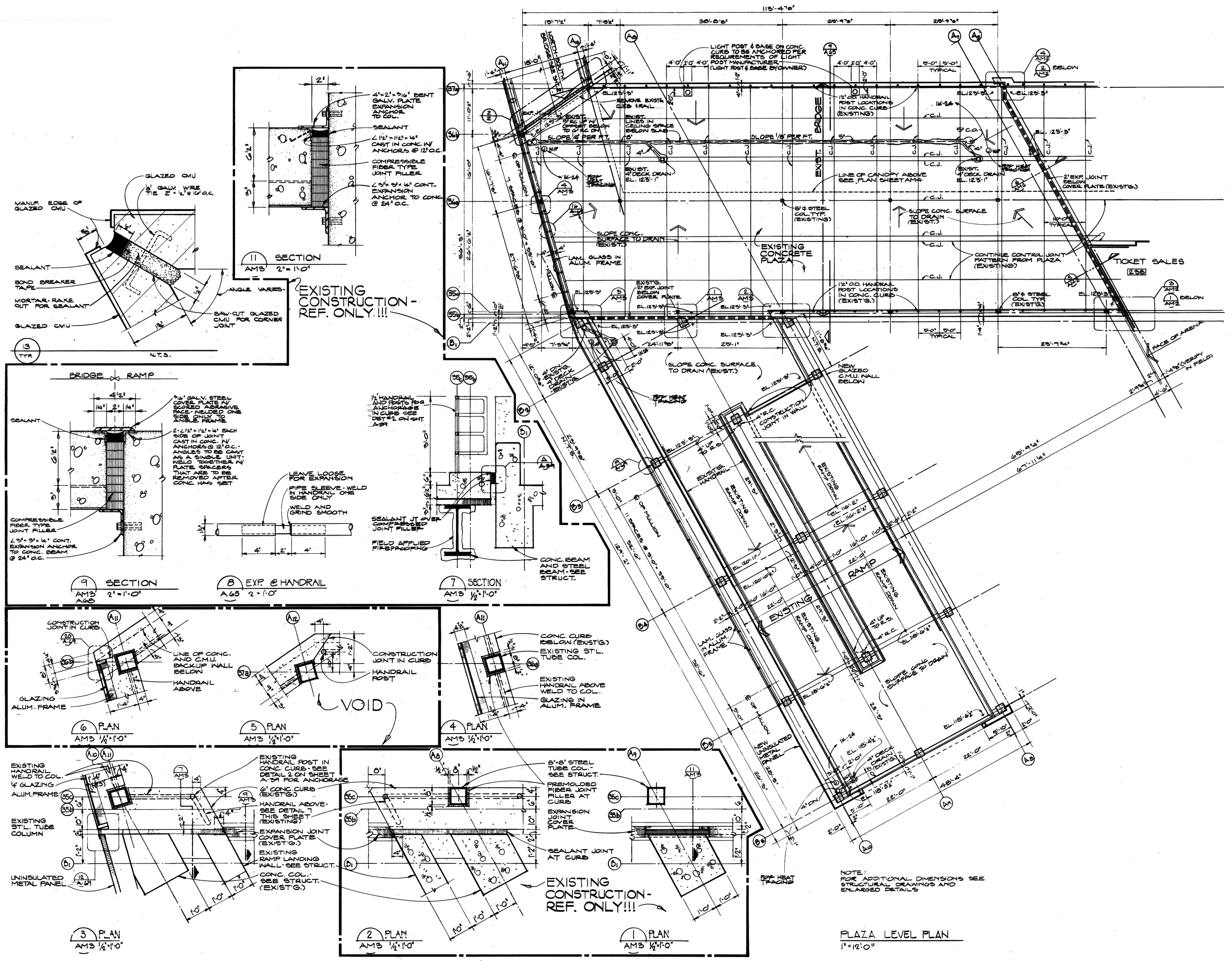

Joe Louis Sports Arena
Pedestrian Walkway
For City Engineering Division

SH&G
Smith, Hinchman & Grylls Associates, Inc.
Architects Engineers Planners
455 West Fort Street
Detroit, Michigan 48226
(313)964-3000
SH&G Job. No. 11732C

Issued For	Date
OWNER	5-30-80

Date	Drawn By
10-2-79	T.D., M.D.

Div. Architect/Engineer
Correlation Check
Project Manager
Construction Administrative Div. Approval
Division Approval

Key Plan

Detail Number
Location or Detail Sheet
N

Drawing Title
ARENA BRIDGE AND RAMP PLAZA LEVEL PLAN AND DETAILS
15031A
Project No.
AM-3
Drawing No.
AS NOTED
Scale
63 OF 96

9-26-79

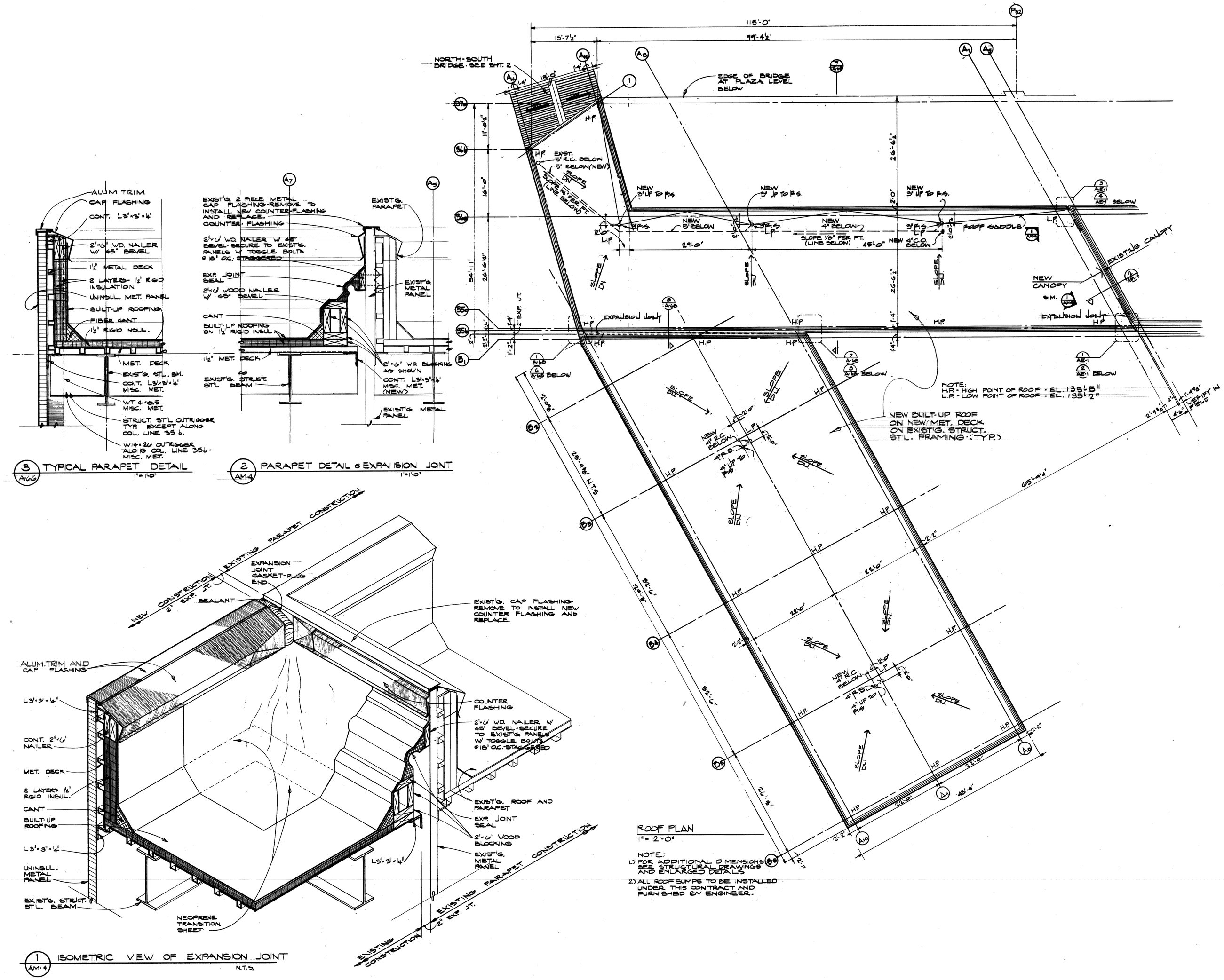

3 TYPICAL PARAPET DETAIL
A-66 1"=1'-0"

2 PARAPET DETAIL @ EXPANSION JOINT
AM-4 1"=1'-0"

1 ISOMETRIC VIEW OF EXPANSION JOINT
AM-4 N.T.S.

ROOF PLAN
1"=12'-0"

NOTE:
1.) FOR ADDITIONAL DIMENSIONS SEE STRUCTURAL DRAWINGS AND ENLARGED DETAILS
2.) ALL ROOF SUMPS TO BE INSTALLED UNDER THIS CONTRACT AND FURNISHED BY ENGINEER.

Joe Louis Sports Arena
Pedestrian Walkway
For City Engineering Division

SH&G
Smith, Hinchman & Grylls Associates, Inc.
Architects Engineers Planners
455 West Fort Street
Detroit, Michigan 48226
(313)964-3000

SH&G Job. No. 11732C

Issued For	Date
OWNER	5-30-80

Date	Drawn By
10-2-79	B.F., A.I.

Div. Architect/Engineer
Correlation Check
Project Manager
Construction Administrative Div. Approval
Division Approval

Key Plan

Detail Number
Location or Detail Sheet
N

Drawing Title
ARENA BRIDGE AND RAMP ROOF LEVEL PLAN AND DETAILS
15031A
Project No.
AM-4
Drawing No.
AS NOTED
Scale
64 OF 96

9-26-79

MC/PRM# 71188

ELECTRICAL LEGEND

SYMBOL	DESCRIPTION
▬	RECEPTACLE PANELBOARD
▥	LIGHTING PANELBOARD
▨	POWER PANELBOARD
T	DRY TYPE DISTRIBUTION TRANSFORMER
D	DISCONNECT SWITCH
———	CONDUIT CONCEALED IN CEILING, WALL OR IN SLAB
- - - - - -	CONDUIT EXPOSED
⊙	GROUND ROD
—●	CONDUIT TURNED DOWN
—○	CONDUIT TURNED UP
▲	LIGHTNING AIR TERMINAL
S	SINGLE POLE SWITCH
	WALL MOUNTED DUPLEX RECEPTACLE (NOTES 2,3)
	FLUORESCENT LUMINAIRE - WALL MOUNTED
	FLUORESCENT LUMINAIRE - RECESSED MOUNTED
	FLUORESCENT LUMINAIRE - SURFACE MOUNTED
	FLUORESCENT LUMINAIRE - SUSPENDED INDUSTRIAL TYPE
	FLUORESCENT STRIP LIGHT
	WALL MOUNTED EXIT LIGHT (NOTES 4,5)
	WALL MOUNTED MERCURY VAPOR LUMINAIRE
	RECESSED MERCURY VAPOR LUMINAIRE
	FIRE ALARM SPEAKER
T	THERMOSTAT
	THREE PHASE MOTOR
	SINGLE PHASE MOTOR
	THREE PHASE COMBINATION MAGNETIC MOTOR STARTER
C	LIGHTING CONTACTOR
F	FIRE ALARM MANUAL PULL STATION
FH	FIRE ALARM HORN

NOTES:—

1. ALL LUMINAIRES WHICH ARE DARKENED IN (EG. ▬) OR NOTED WITH "EM" (EG. —EM), SHALL BE ON AN EMERGENCY LIGHTING CIRCUIT.
2. "WP" SUBSCRIPT INDICATES WEATHERPROOF
3. "K" SUBSCRIPT INDICATES KEY LOCK COVERPLATE
4. SHADING INDICATES ILLLUMINATED FACE
5. ARROWS INDICATE REQUIREMENT FOR AND ORIENTATION OF DIRECTIONAL ARROWS.

POWER PANEL PP-1 SCHEDULE

MAINS 400A VOLTAGE 480/277 MOUNTING SURFACE
MAIN SW. 400A PHASES 3
MAIN FUSE 400A WIRES 4 NOTES

CIRC. NO.	LOAD SERVED	LOAD RATING	SWITCH/ FUSE	FEEDER
1	ELEV. WIREWAY	98 KVA	200/150	2"C., 3#1/0 & 1#6 GRD.
2	LP-1A	27 KVA	100/100	1½"C., 4# 2 & 1#8 GRD.
3	RP-A	15 KVA	30/30	¾"C., 3#10 & 1#10 GRD
4	STAIR/ELEV. FANS	2-¾ HP	30/20	¾"C., 3#12 & 1#12 GRD
5	RAMP FANS	2-2 HP	30/20	¾"C., 3#12 & 1#12 GRD
6	SPARE	—	30/-	—
7	SPARE	—	60/-	—
8	SPARE	—	60/-	—
9	SPACE	—	100/-	—

RECEPTACLE/LIGHTING PANELBOARD SCHEDULE

PANEL	MAINS	MAIN BRKR.	VOLTAGE	PHASE-WIRE	BRANCH BREAKERS	SPACES	TOTAL POLES
RP-A	60A.	50A.	208/120	3-4	14-1P-20A.	0	14
RP-EL	60A.	50A	208/120	3-4	12-1P-20A.	2	14
LP-1A	125A	—	480/277	3-4	17-1P-20A, 1-1P-60A	12	30
BP-1	60A	—	277		6-1P-20A	—	6

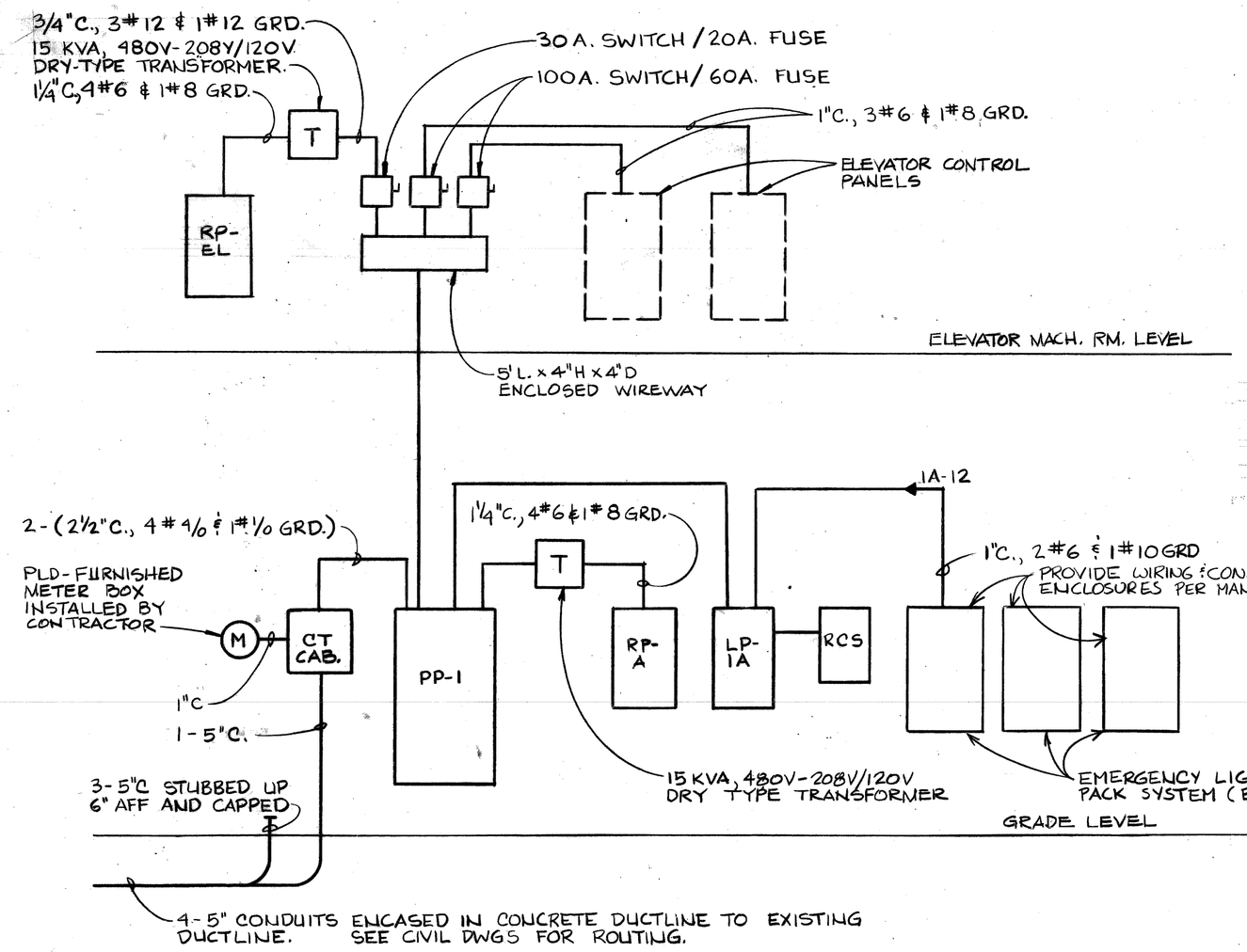

POWER RISER DIAGRAM
NO SCALE

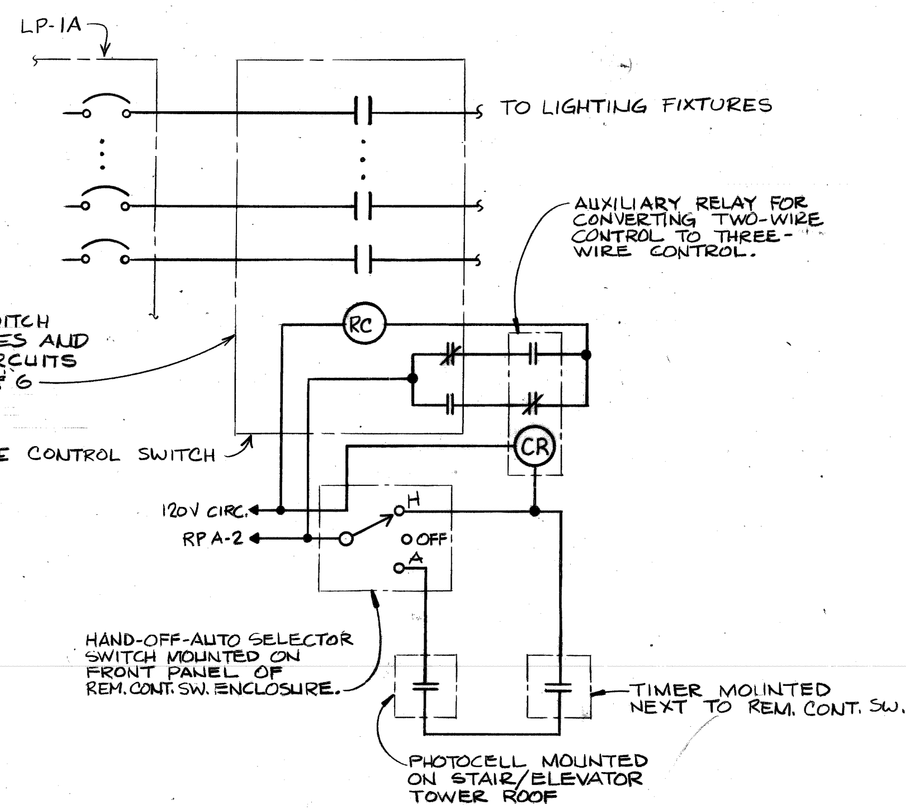

LIGHTING CONTROL DIAGRAM
NO SCALE

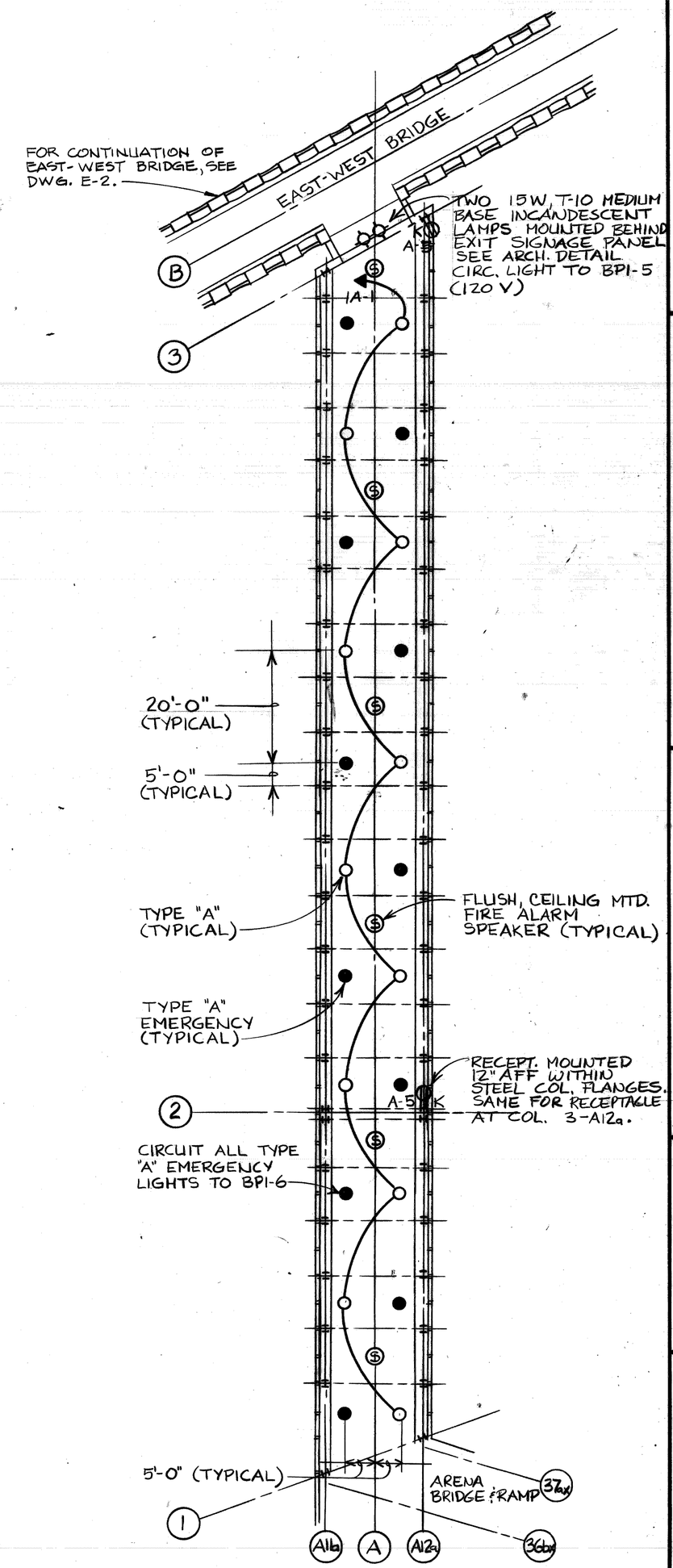

NOTE:
FOR ELECTRICAL WORK AT ARENA BRIDGE AND RAMP, SEE DWGS AE-1,2,3 & AM-3.

NORTH-SOUTH BRIDGE ELECTRICAL PLAN
1/16" = 1'-0"

Joe Louis Sports Arena
Pedestrian Walkway
For City Engineering Division

SH&G
Smith, Hinchman & Grylls Associates, Inc.
Architects Engineers Planners
455 West Fort Street
Detroit, Michigan 48226
(313)964-3000
SH&G Job. No. 11732C

OWNER Issued For — 5-30-80 Date

1-18-80 Date — RES, LJT, DFW Drawn By
Div. Architect/Engineer
Correlation Check
Project Manager
Construction Administrative Div. Approval
Division Approval

Key Plan

N

Drawing Title
ELECTRICAL RISER, SCHEDULES, LEGEND AND NORTH-SOUTH BRIDGE PLAN

15031A Project No.
E-1 Drawing No.
AS NOTED Scale

9-26-79

MC/PRM# 7188

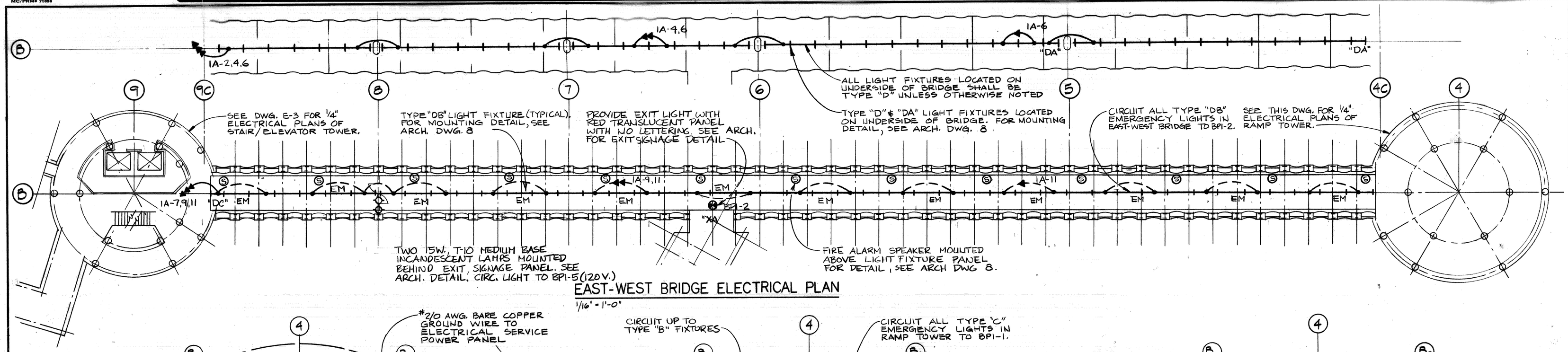

EAST-WEST BRIDGE ELECTRICAL PLAN

1/16" = 1'-0"

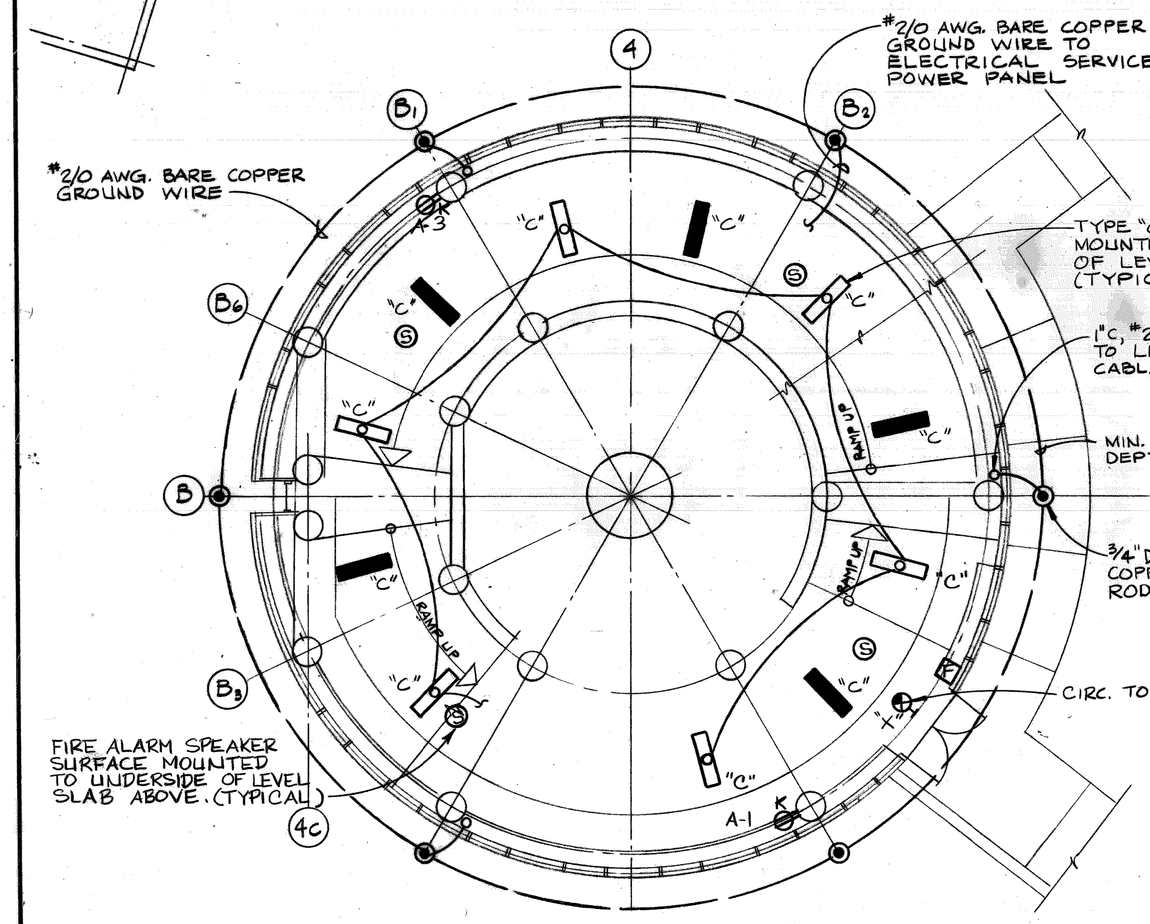

GRADE LEVEL ELECTRICAL PLAN RAMP TOWER

1/8" = 1'-0"

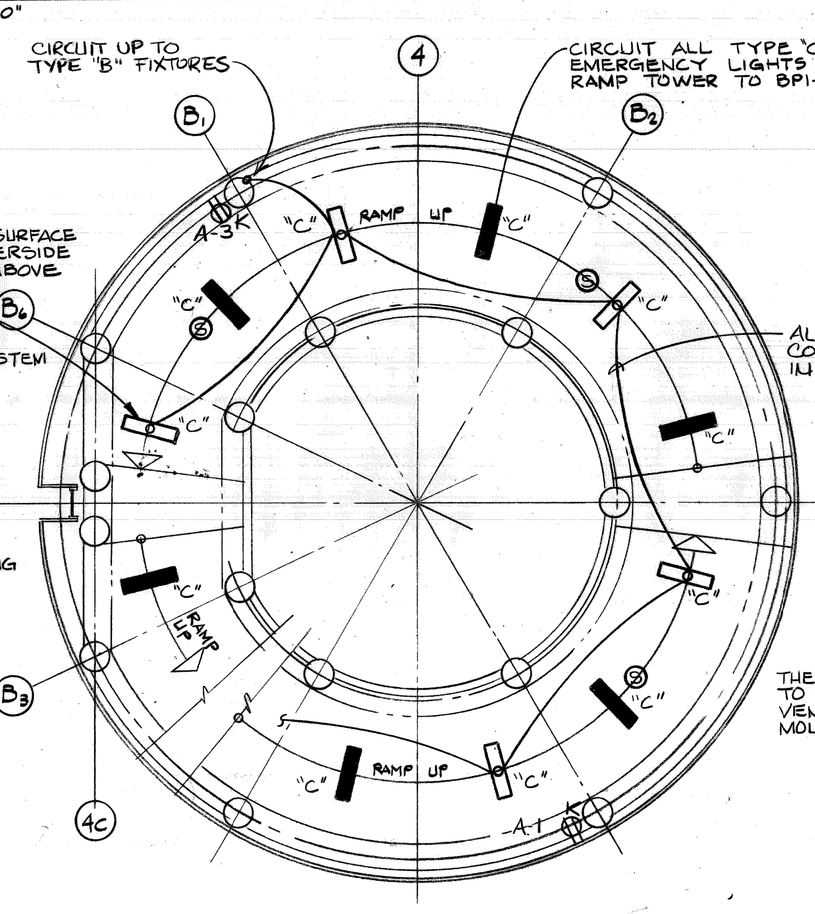

INTERMEDIATE LEVEL ELECTRICAL PLAN RAMP TOWER

1/8" = 1'-0"

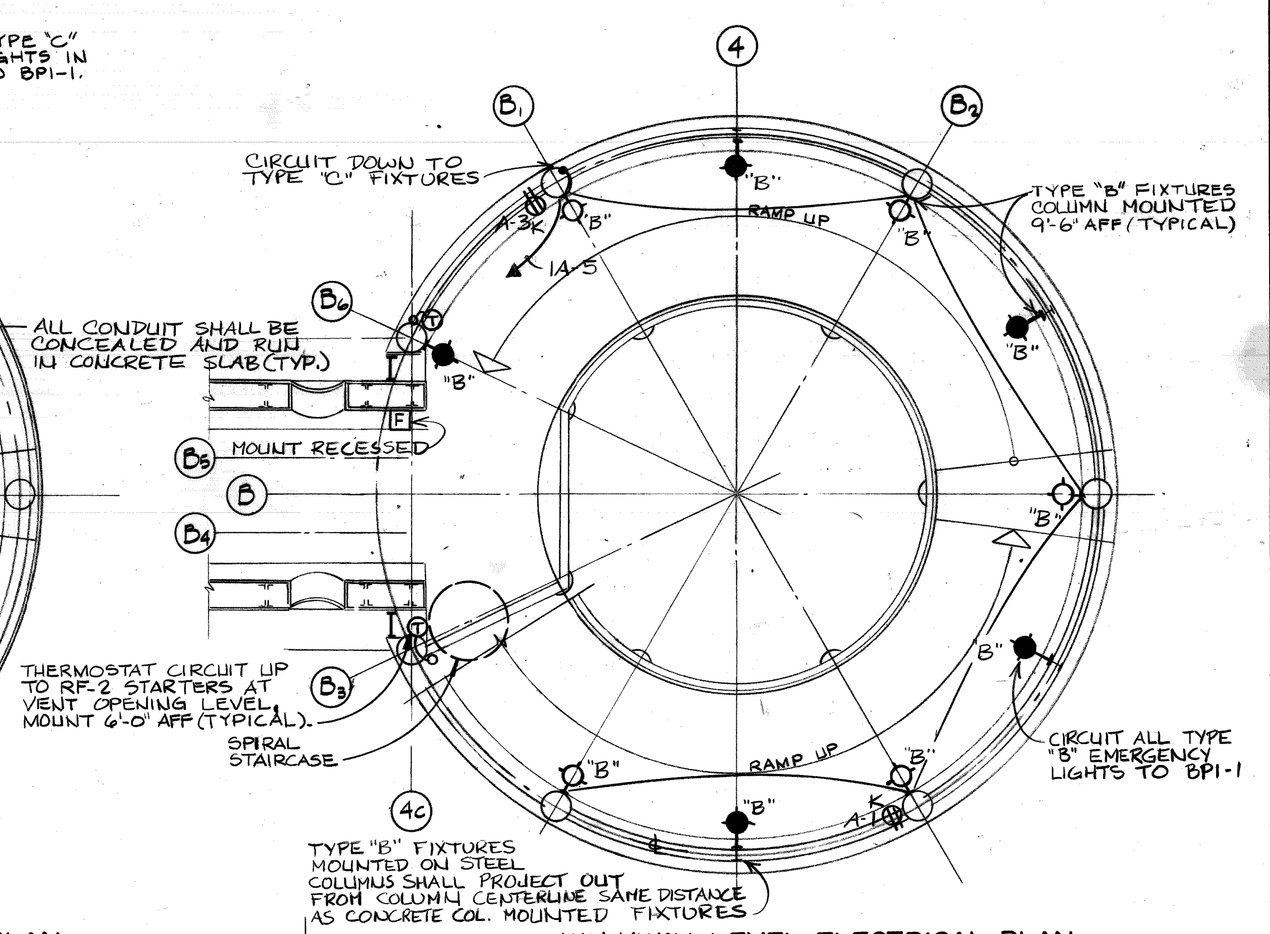

WALKWAY LEVEL ELECTRICAL PLAN RAMP TOWER

1/8" = 1'-0"

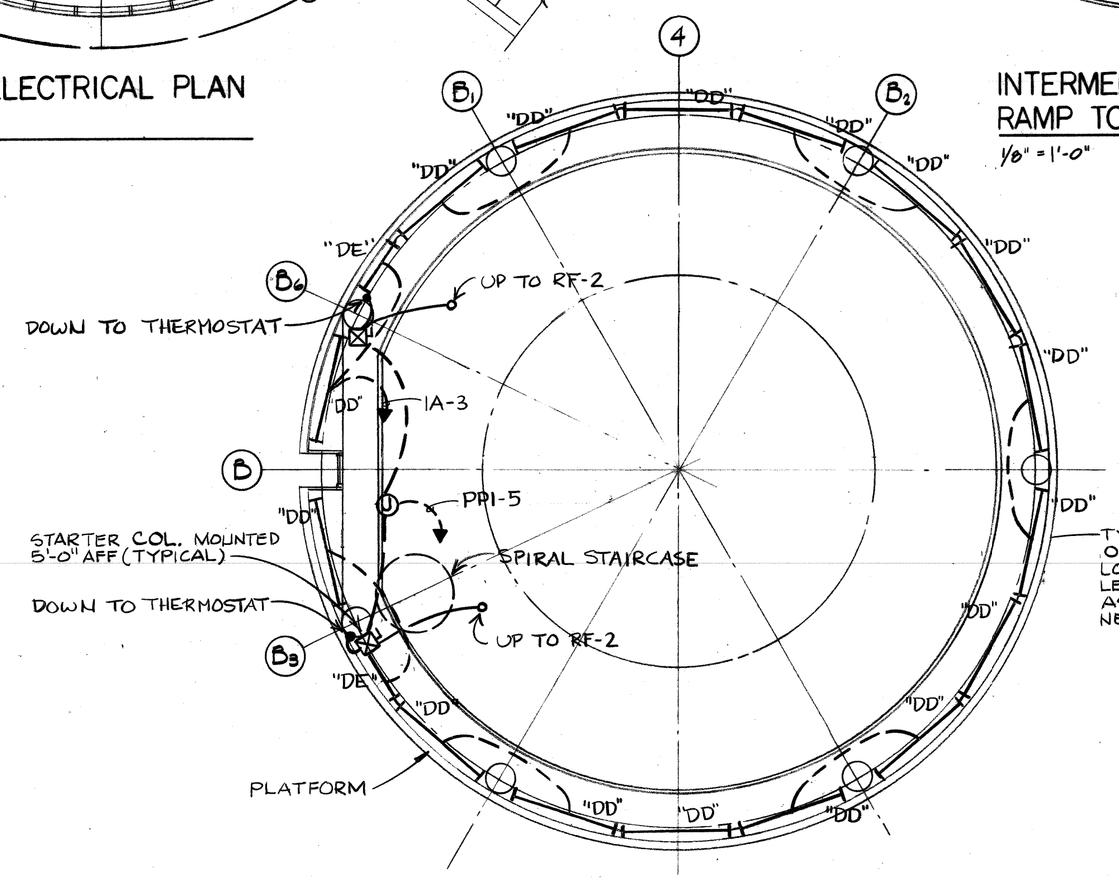

VENT OPENING LEVEL ELECTRICAL PLAN - RAMP TOWER

1/8" = 1'-0"

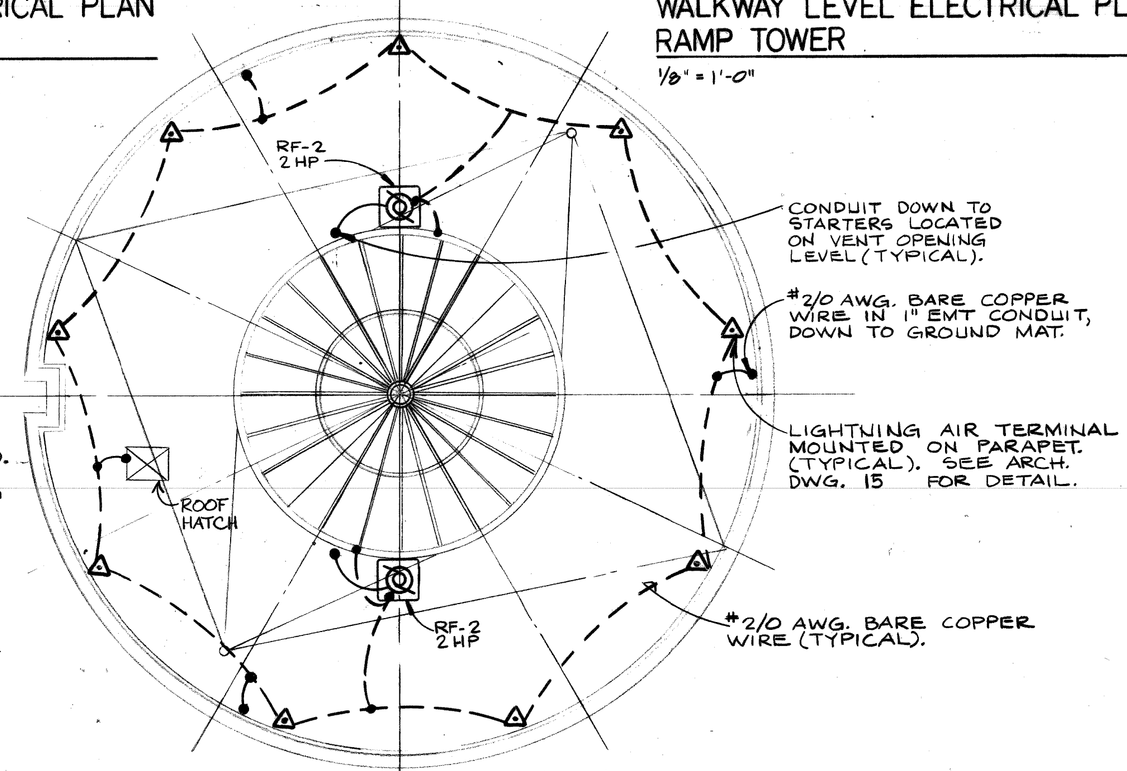

ROOF ELECTRICAL PLAN - RAMP TOWER

1/8" = 1'-0"

Joe Louis Sports Arena
Pedestrian Walkway
For City Engineering Division

SH&G
Smith, Hinchman & Grylls Associates, Inc.
Architects Engineers Planners
455 West Fort Street
Detroit, Michigan 48226
(313)964-3000

SH&G Job. No. 11732C

OWNER Issued For	5-30-80 Date
1-18-80 Date	RES, LUT, DFW Drawn By
Div. Architect/Engineer	R. Lwiecki
Coordination Check	
Project Manager	
Construction Administrative Div. Approval	
Division Approval	

Key Plan

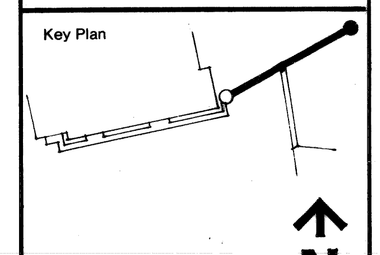

Drawing Title
EAST WEST BRIDGE AND RAMP TOWER ELECTRICAL PLANS

15031A
Project No.
E-2
Drawing No.
AS NOTED
Scale

66 OF 95

9-26-79

MC/PRM# 71188

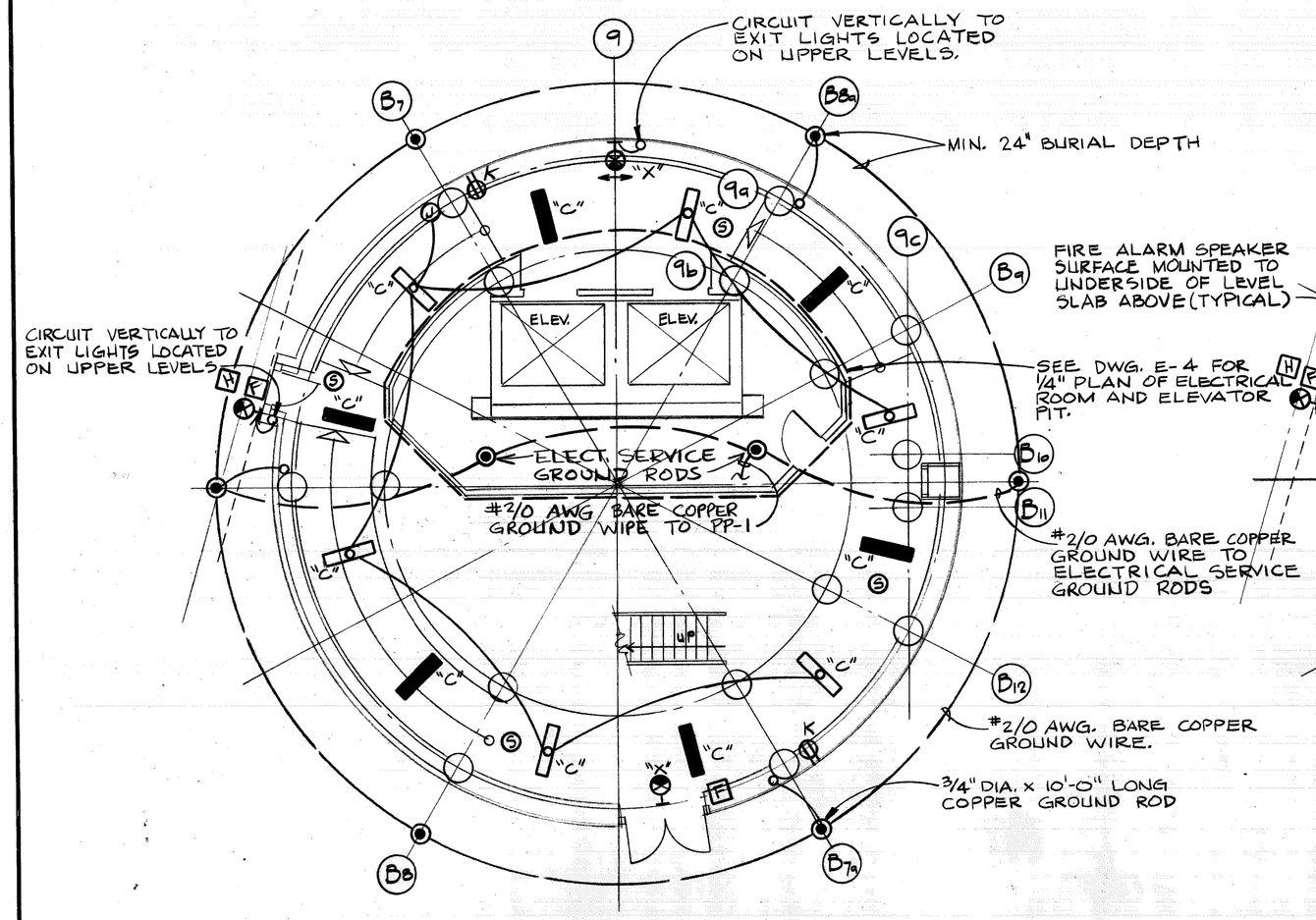

GRADE LEVEL ELECTRICAL PLAN
STAIR / ELEVATOR TOWER

1/8" = 1'-0"

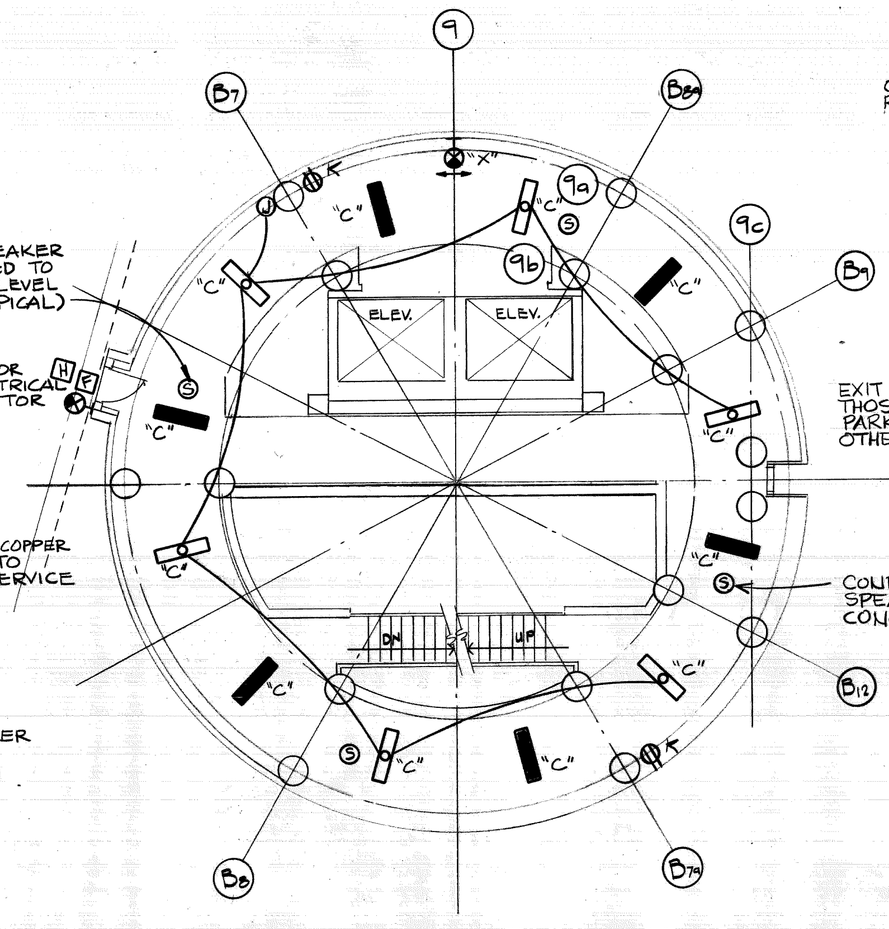

SECOND LEVEL ELECTRICAL PLAN
STAIR / ELEVATOR TOWER

1/8" = 1'-0"

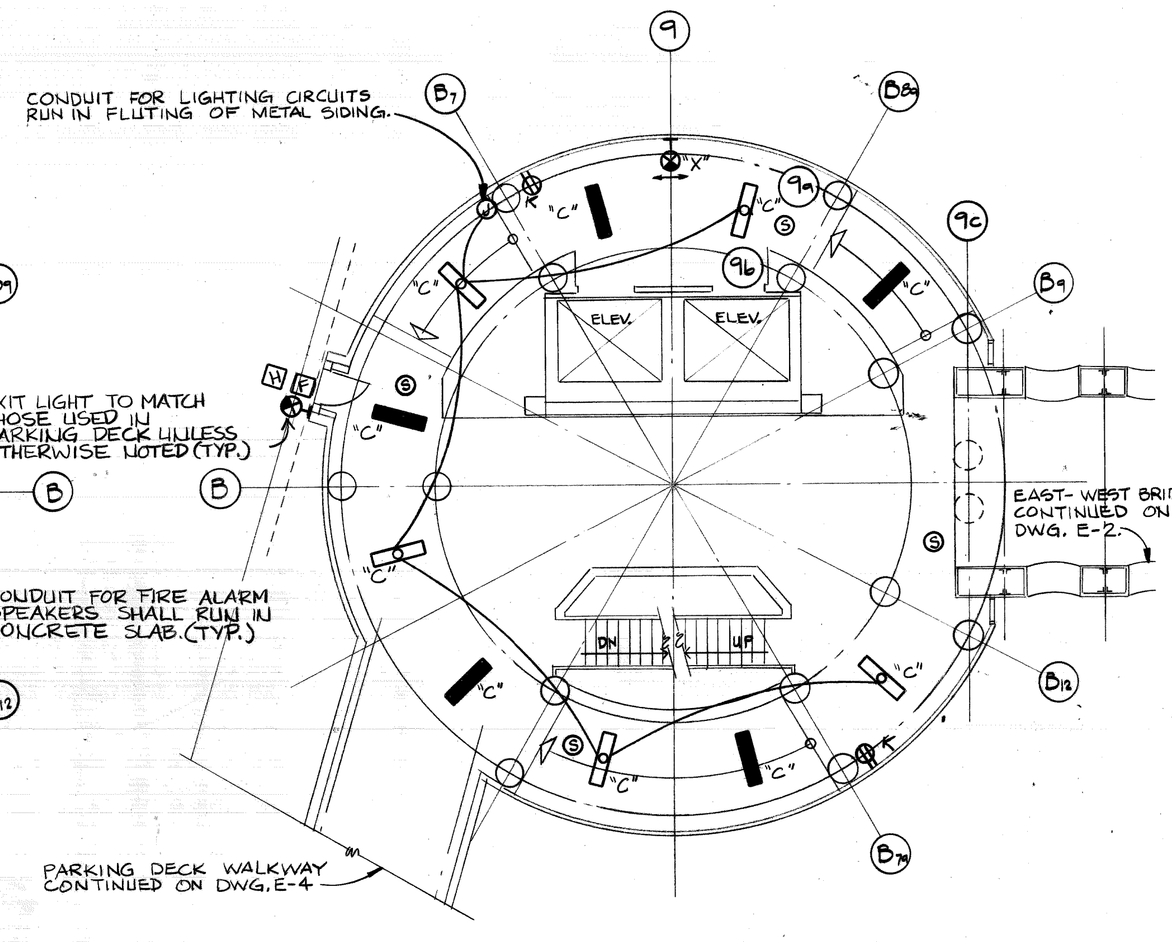

WALKWAY LEVEL ELECTRICAL PLAN
STAIR / ELEVATOR TOWER

1/8" = 1'-0"

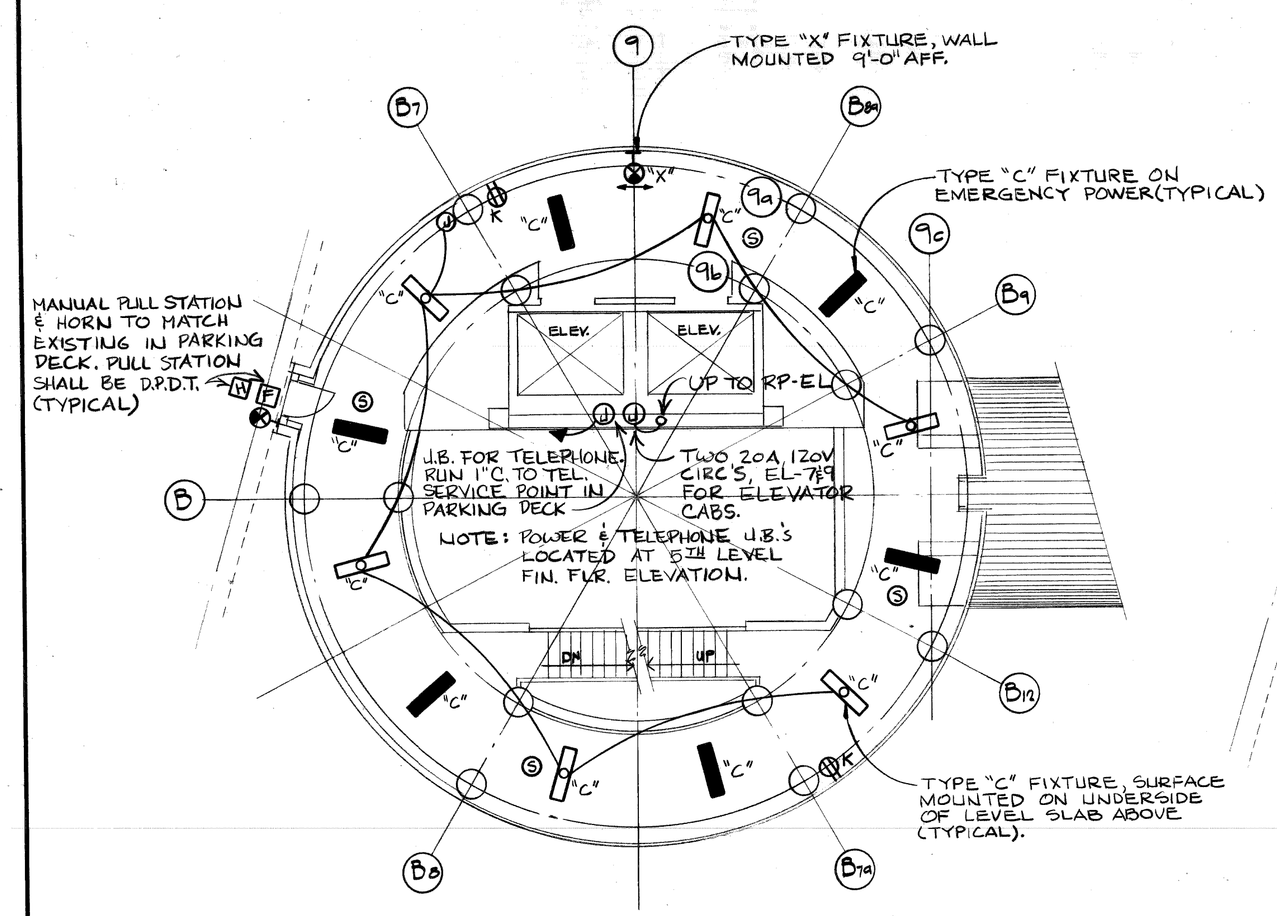

TYPICAL LEVEL ELECTRICAL PLAN
STAIR / ELEVATOR TOWER

1/8" = 1'-0"

NOTE: TYPICAL LEVEL PLAN APPLIES TO LEVELS 3, 5, 6 & 7.

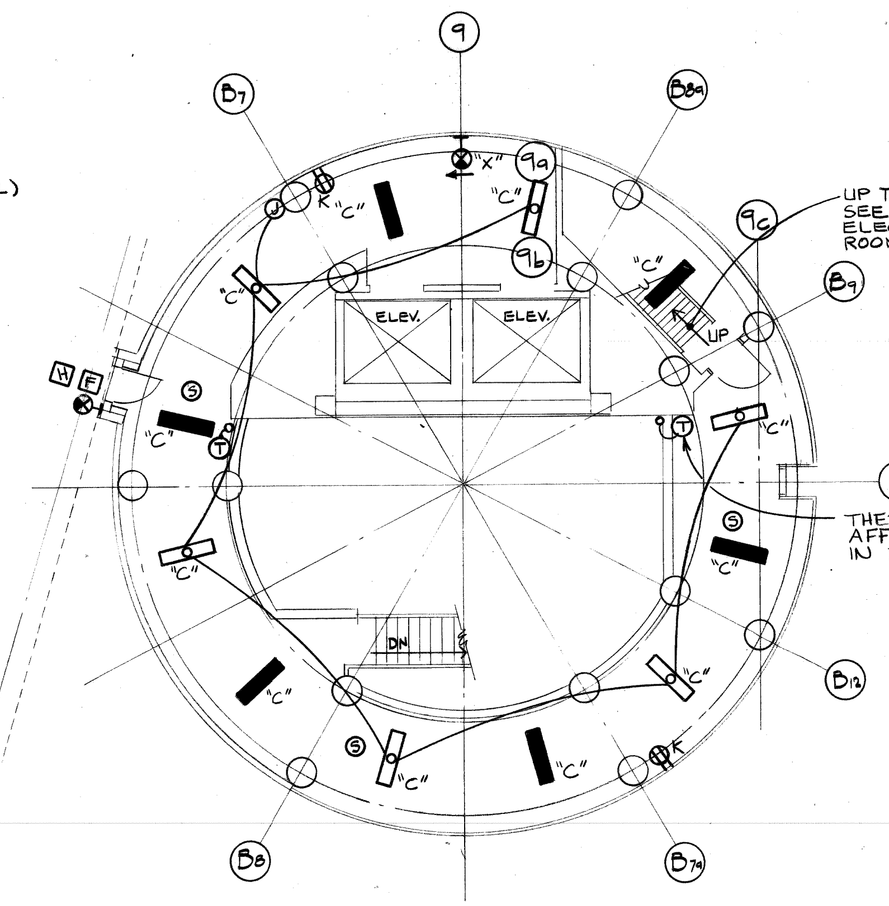

EIGHTH LEVEL ELECTRICAL PLAN
STAIR / ELEVATOR TOWER

1/8" = 1'-0"

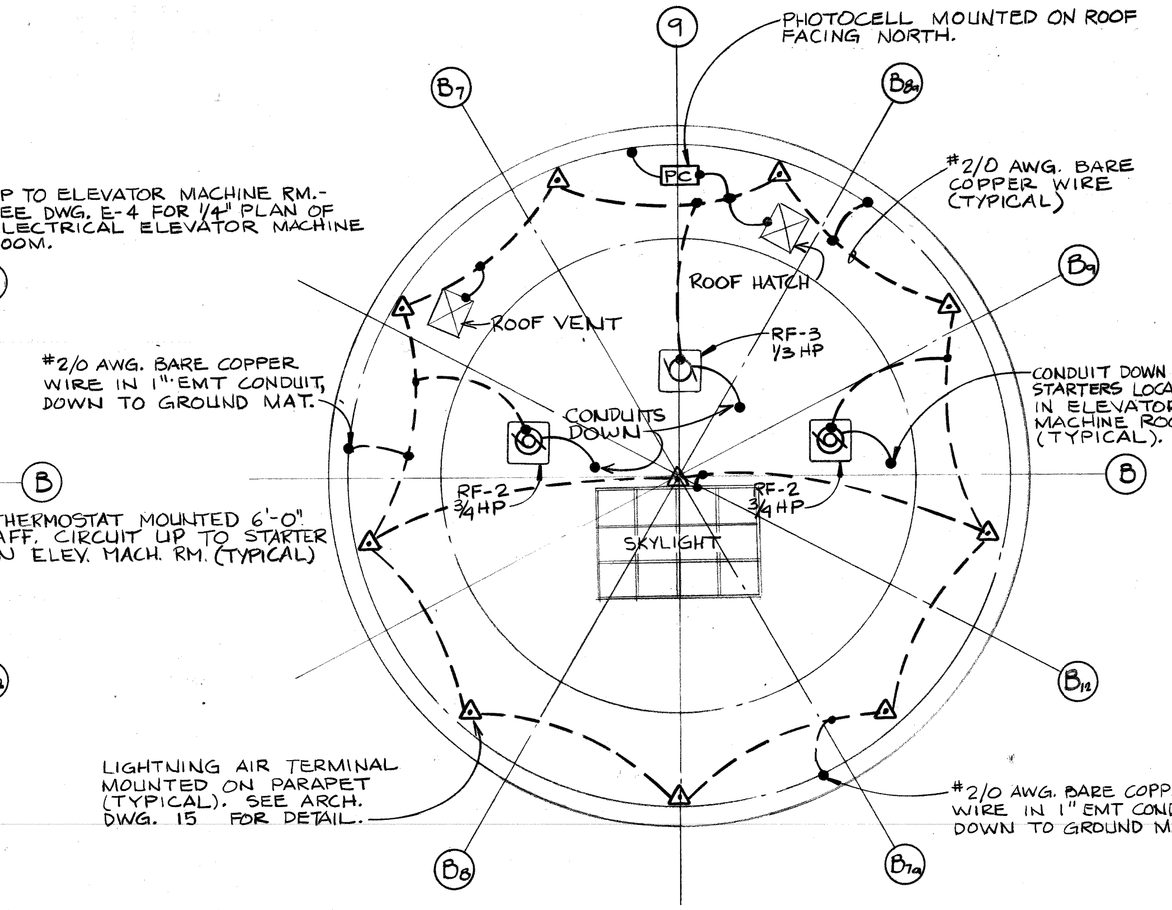

ROOF ELECTRICAL PLAN
STAIR / ELEVATOR TOWER

1/8" = 1'-0"

RECEPTACLE CIRCUITING NOTES: ALL RECEPTACLES IN THE CORRIDORS SHALL BE CIRCUITED AS FOLLOWS; COLUMN B7 RECEPTACLES TO A-6, COLUMN B7a RECEPTACLES TO A-8. CONDUIT SHALL BE WITHIN METAL SIDING FLUTING.

LIGHTING CIRCUITING NOTES: ALL TYPE "C" LUMINAIRES SHALL BE CIRCUITED AS FOLLOWS; LEVELS 1, 2, 3 & 4 TO 1A-8, LEVELS 5, 6, 7 & 8 TO 1A-10. ALL TYPE "C" & "X" EMERGENCY LUMINAIRES SHALL BE CIRCUITED AS FOLLOWS; LEVELS 1, 2, 3 & 4 TO BP1-3, LEVELS 5, 6, 7 & 8 TO BP1-4. ALL CONDUIT INDICATED AS CONCEALED SHALL BE RUN IN CONCRETE SLAB.

Joe Louis Sports Arena
Pedestrian Walkway
For City Engineering Division

SH&G
Smith, Hinchman & Grylls Associates, Inc.
Architects Engineers Planners
455 West Fort Street
Detroit, Michigan 48226
(313)964-3000
SH&G Job. No. 11732C

OWNER	5-30-80
Issued For	Date

1-18-80 RES, LJT, DFW	
Date	Drawn By
Div. Architect/Engineer	
Correlation Check	
Project Manager	
Construction Administration Div. Approval	
Division Approval	

Key Plan

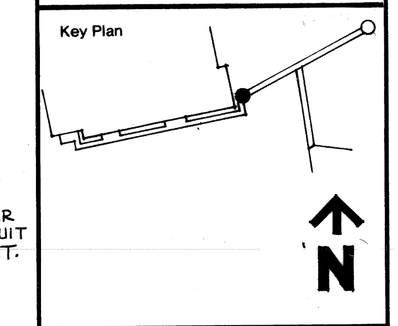

Drawing Title
STAIR/ELEVATOR TOWER ELECTRICAL PLANS

15031A
Project No.
E-3
Drawing No.
Scale

9-26-79

MC/PRM# 71188

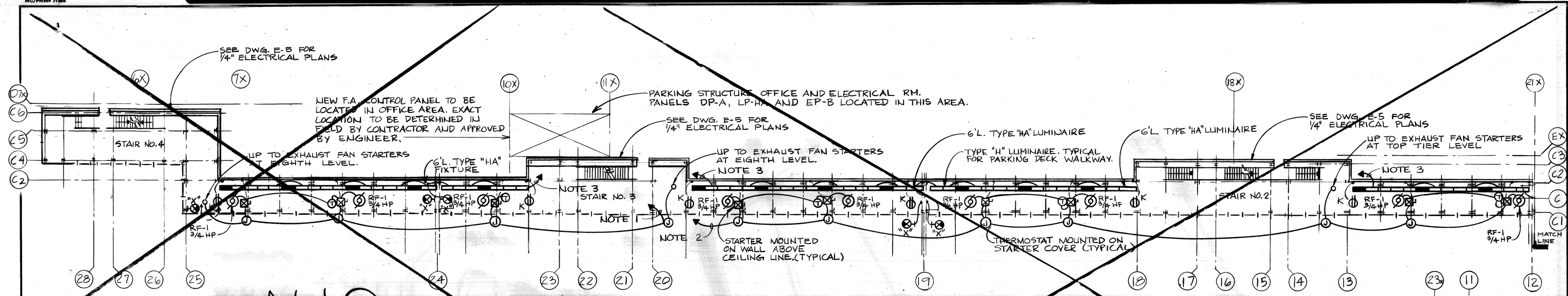

N.I.C.

PARKING DECK WALKWAY ELECTRICAL PLAN

1/16" = 1'-0"

NOTES

1. 3/4"C., 3#10 & #10 E.G. CIRCUIT (3) RF-1 AND (4) EF-1 TO 60A SWITCH IN PANEL DP-A. FUSE CIRCUIT AT 30A. (PROVIDE FUSE REDUCER)
2. 3/4"C., 3#10 & #10 E.G. CIRCUIT (6) RF-1 AND (2) EF-1 TO 60A SWITCH IN PANEL DP-A. FUSE CIRCUIT AT 30A. (PROVIDE FUSE REDUCER)
3. EACH INDICATED WALKWAY LIGHTING CIRCUIT SHALL BE SERVED FROM A SEPARATE 1P-20A-277V CIRCUIT FROM LP-HA.
4. ALL RECEPTACLE CIRCUIT WIRING SHALL CONSIST OF MIN. #10AWG WIRE.
5. WALKWAY LEVEL RECEPTACLES SHALL BE CIRCUITED WITH STAIR RECEPTACLES AS FOLLOWS:

STAIR NO. 4	– RECEPTACLES BETWEEN COL'S		24 TO 25
STAIR NO. 3	– "	"	24 TO 19
STAIR NO. 2	– "	"	19 TO 12

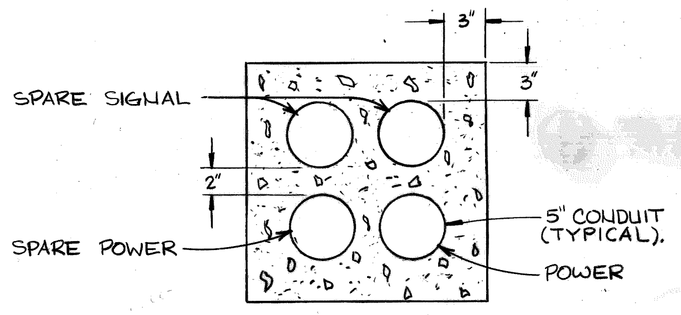

ELECTRICAL DUCTLINE SECTION

1½" = 1'-0"

N.I.C.

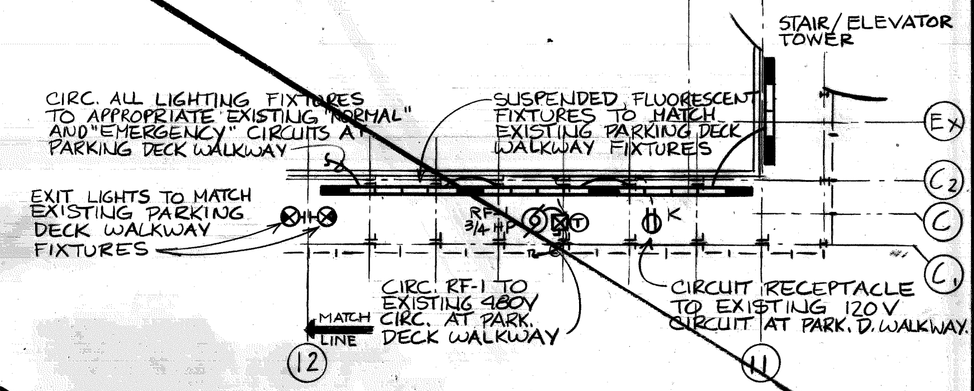

PARTIAL PLAN

1/16" = 1'-0"

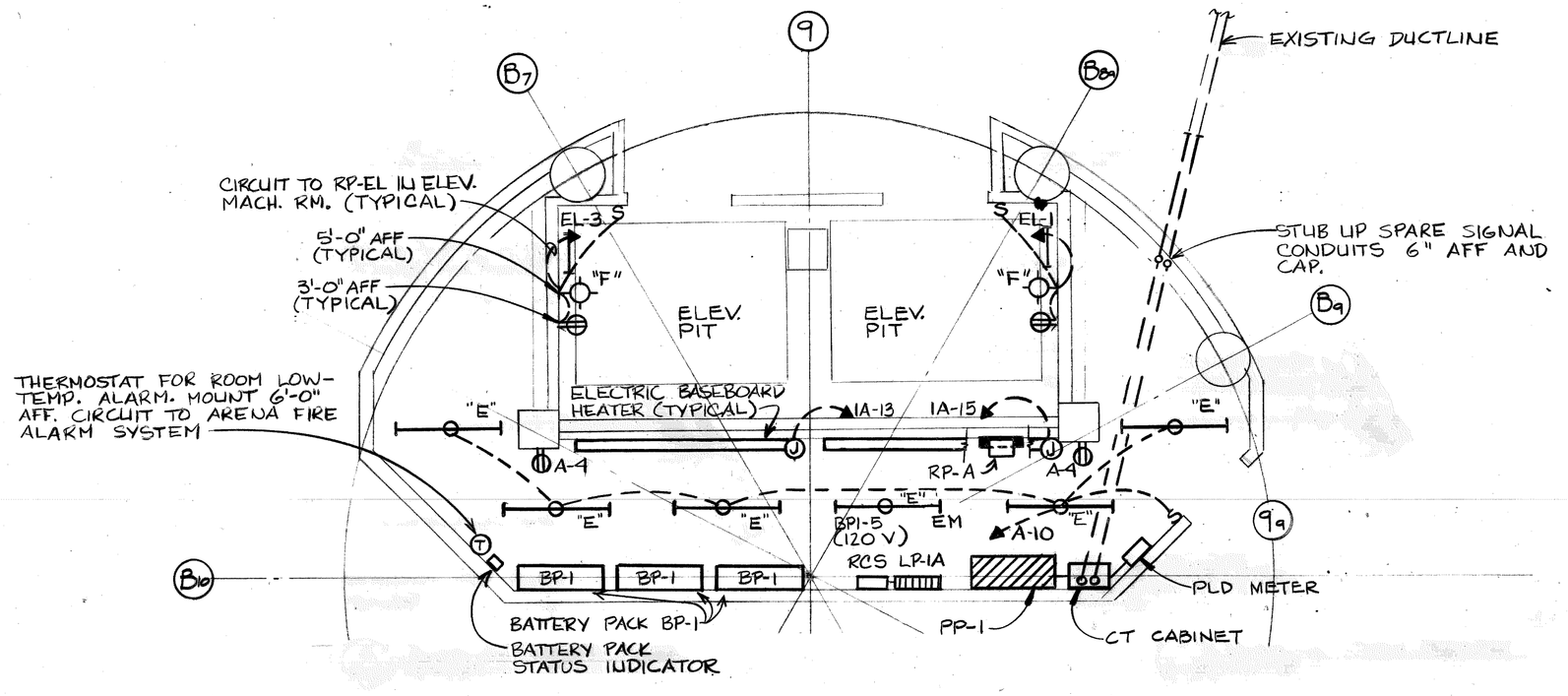

ELECTRICAL ROOM AND ELEVATOR PIT ELECTRICAL PLAN

1/4" = 1'-0"

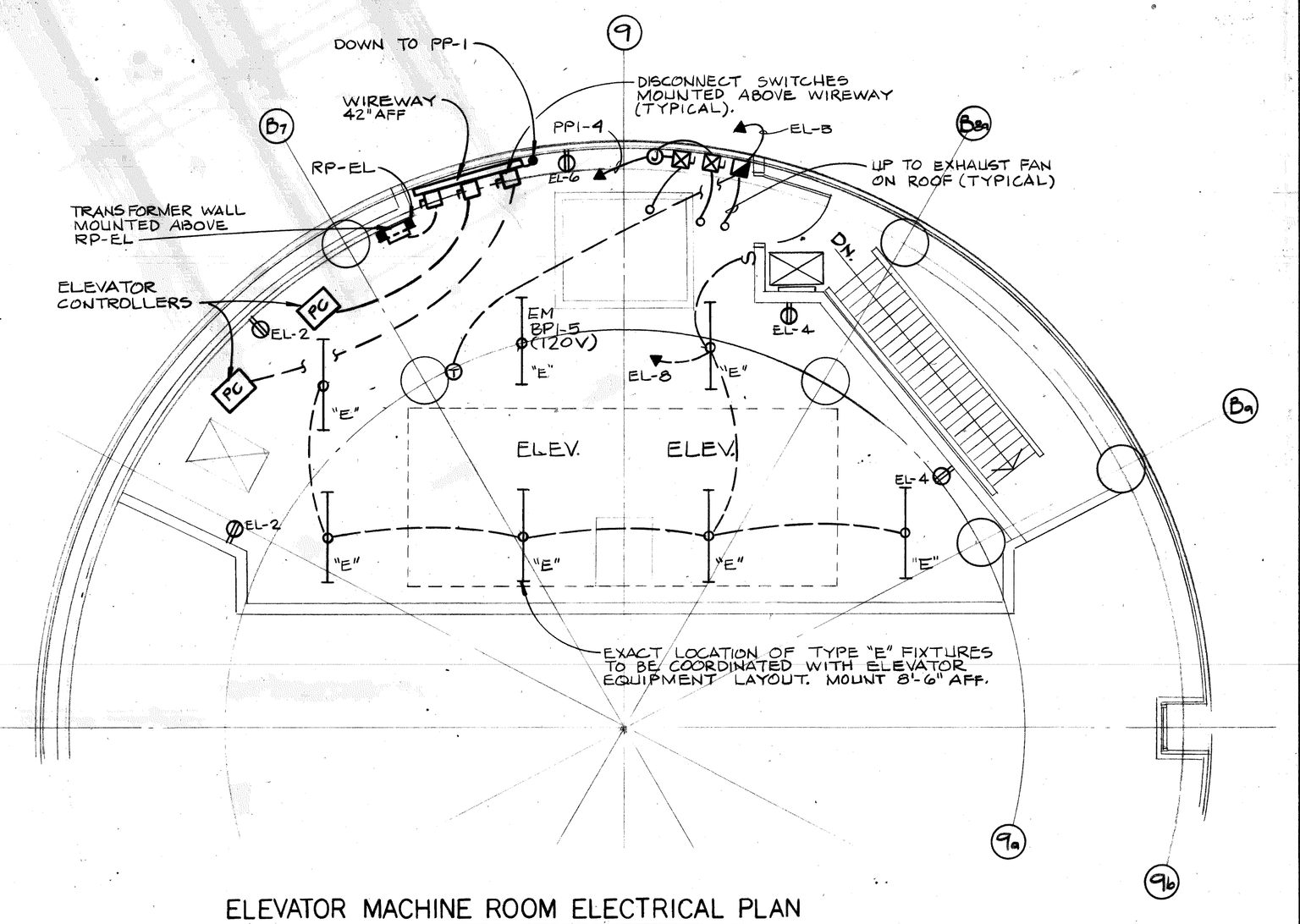

ELEVATOR MACHINE ROOM ELECTRICAL PLAN

1/4" = 1'-0"

Joe Louis Sports Arena
Pedestrian Walkway
For City Engineering Division

SH&G
Smith, Hinchman & Grylls Associates, Inc.
Architects Engineers Planners
455 West Fort Street
Detroit, Michigan 48226
(313)964-3000

SH&G Job. No. 11732C

OWNER	5-30-80
Issued For	Date
1-18-80	RES, LJT, DFW
Date	Drawn By

C. Rappaport
Div. Architect/Engineer
D. Wendlandt, R. Swried
Correlation Check
Project Manager
Construction Administrative Div. Approval
Division Approval

Key Plan

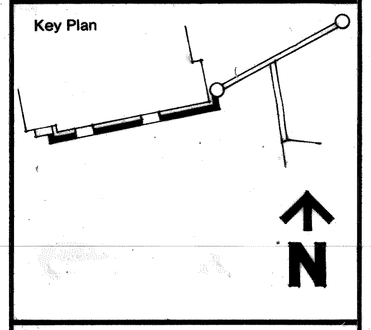

N

Drawing Title
PARKING DECK WALKWAY ELECTRICAL PLAN AND DETAILS

15031A
Project No.
E-4
Drawing No.
AS NOTED
Scale

9-26-79

MC/Prime 71288

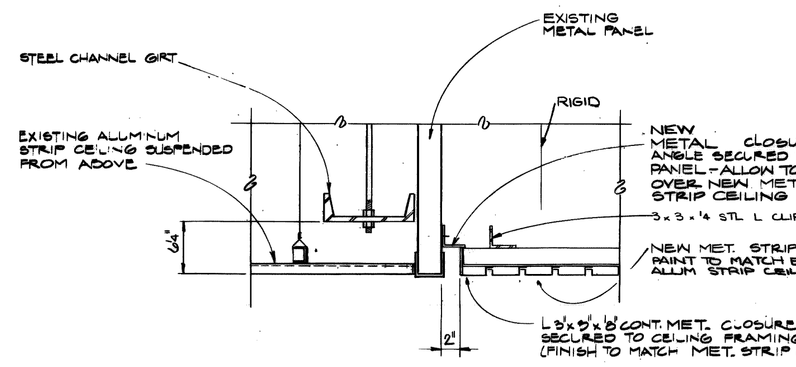

5 AE3 SECTION · CEILING CONDITION @ EXP. JOINT
1" = 1'-0"

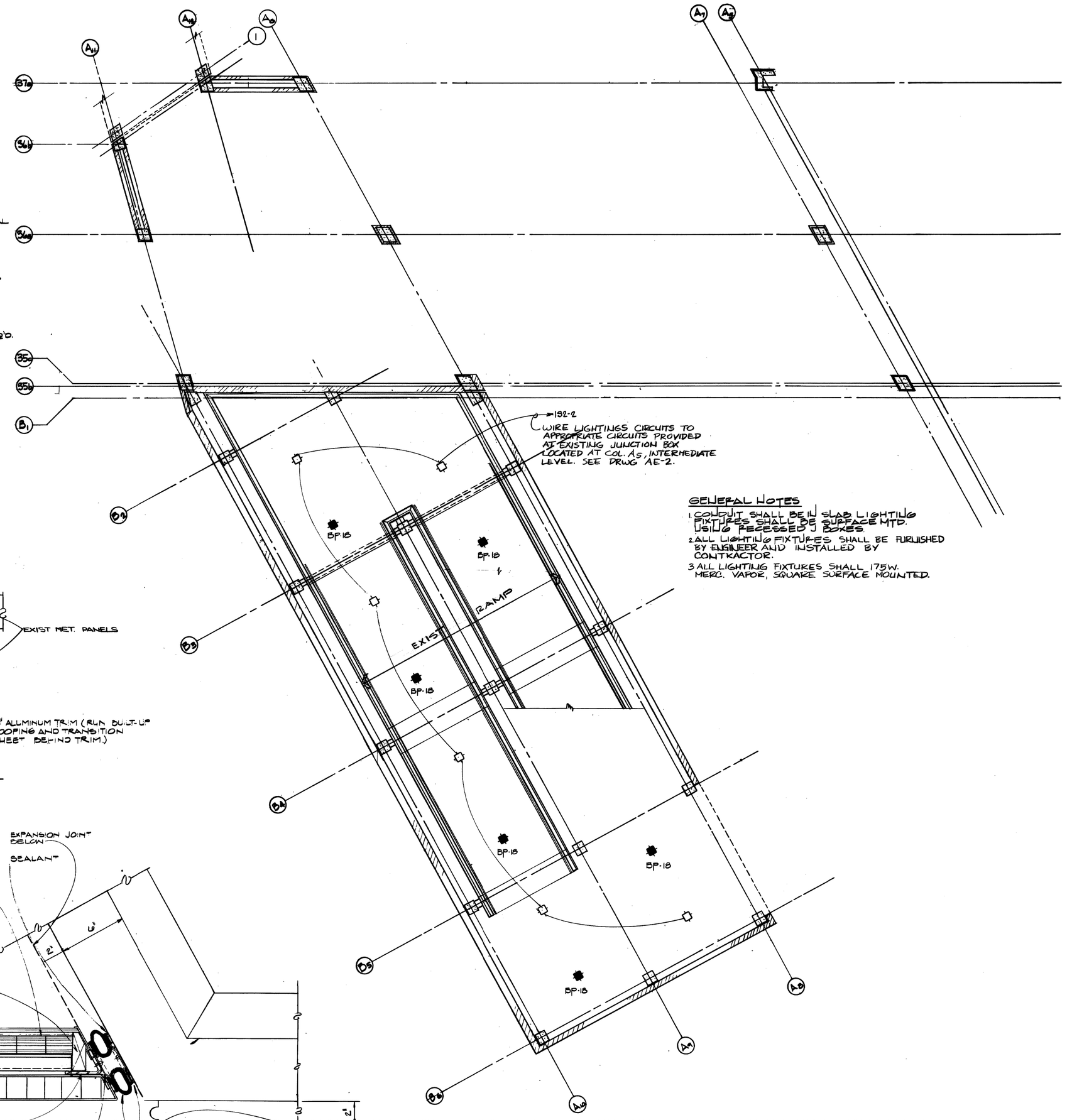

GENERAL NOTES
1 CONDUIT SHALL BE IN SLAB LIGHTING FIXTURES SHALL BE SURFACE MTD. USING RECESSED J BOXES
2 ALL LIGHTING FIXTURES SHALL BE FURNISHED BY ENGINEER AND INSTALLED BY CONTRACTOR.
3 ALL LIGHTING FIXTURES SHALL 175W. MERC. VAPOR, SQUARE SURFACE MOUNTED.

REFLECTED CEILING PLAN
THIRD STREET LEVEL - 1" = 12'-0"

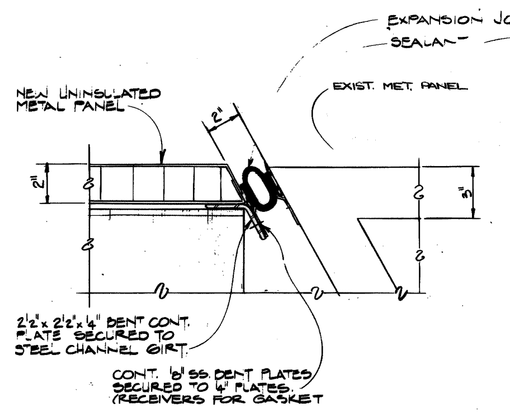

4 AM4 PLAN CUT BELOW ROOF
2" = 1'-0"

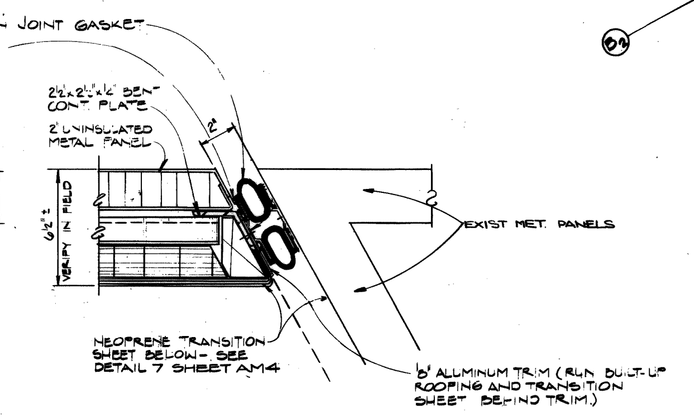

3 AM4 PLAN CUT THRU PARAPET
2" = 1'-0"

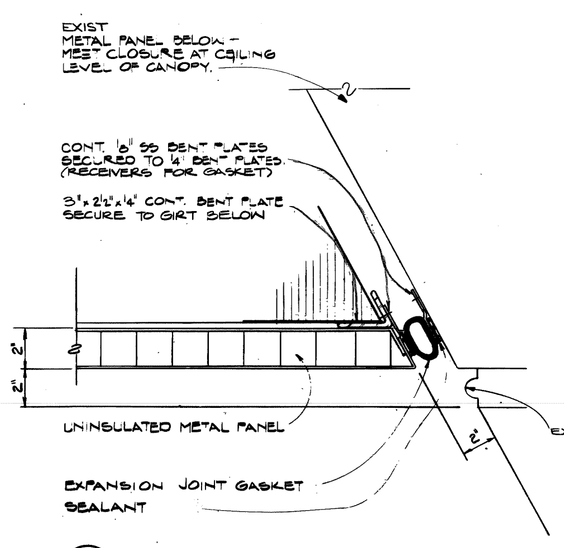

2 AM4 PLAN CUT BELOW ROOF
2" = 1'-0"

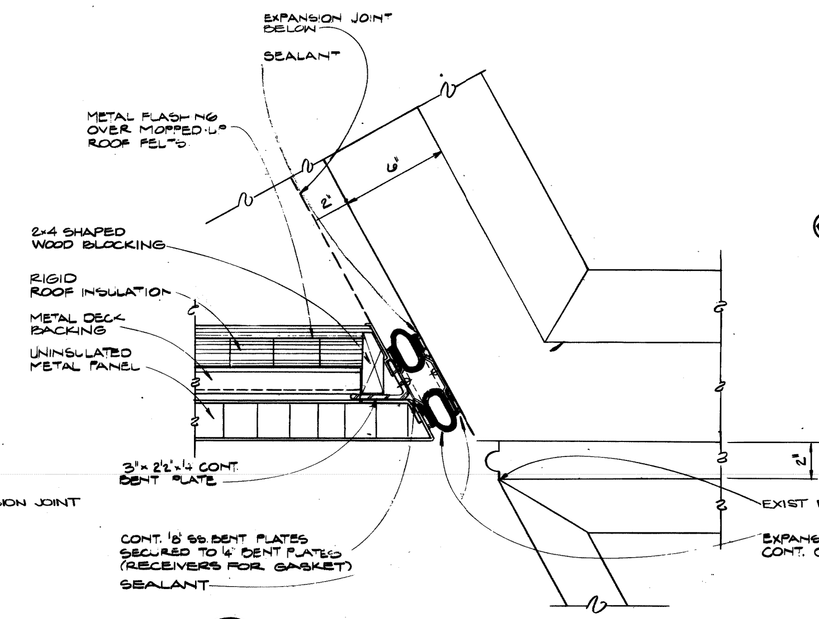

1 AM4 PLAN CUT THRU PARAPET
2" = 1'-0"

Joe Louis Sports Arena
Pedestrian Walkway
For City Engineering Division

SH&G
Smith, Hinchman & Grylls Associates, Inc.
Architects Engineers Planners
455 West Fort Street
Detroit, Michigan 48226
(313)964-3000
SH&G Job. No. 11732C

OWNER	5-30-80
Issued For	Date
10-2-79	B.F. - J.W.
Date	Drawn By
Dir. Architect/Engineer	
Correlation Check	
Project Manager	
Construction Administration Div. Approval	
Division Approval	

Key Plan

Detail Number / Location or Detail Sheet

N

Drawing Title
ARENA BRIDGE AND RAMP REFLECTED CEILING PLAN AND DETAILS
15031A
Project No.
AE-1
Drawing No.
AS NOTED
Scale

69 OF 96

9-26-79

MC/Prado 71000

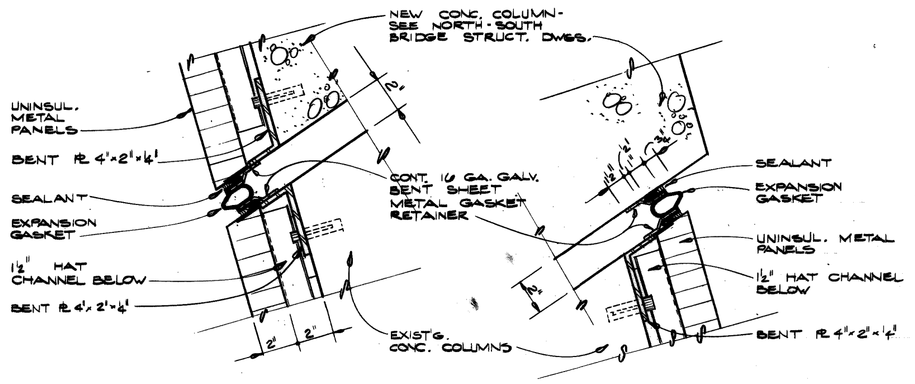

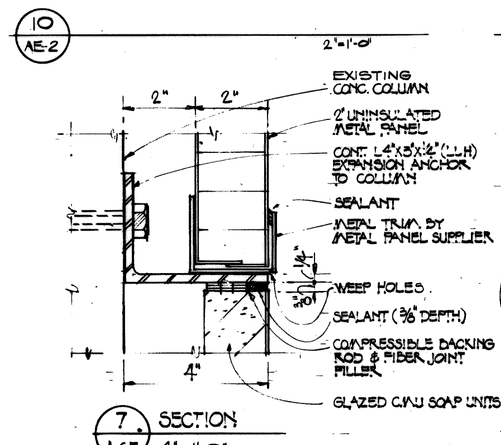

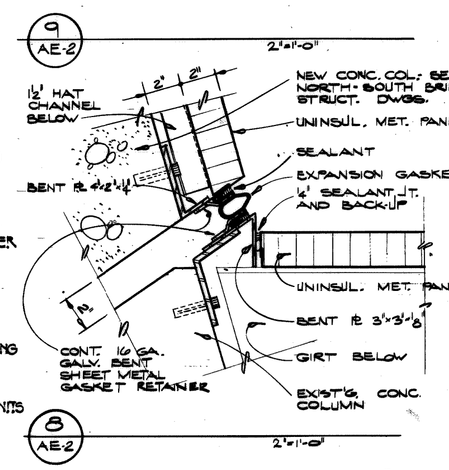

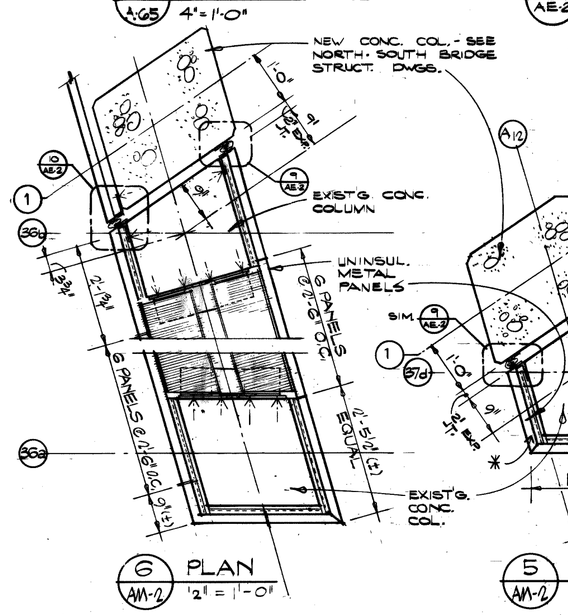

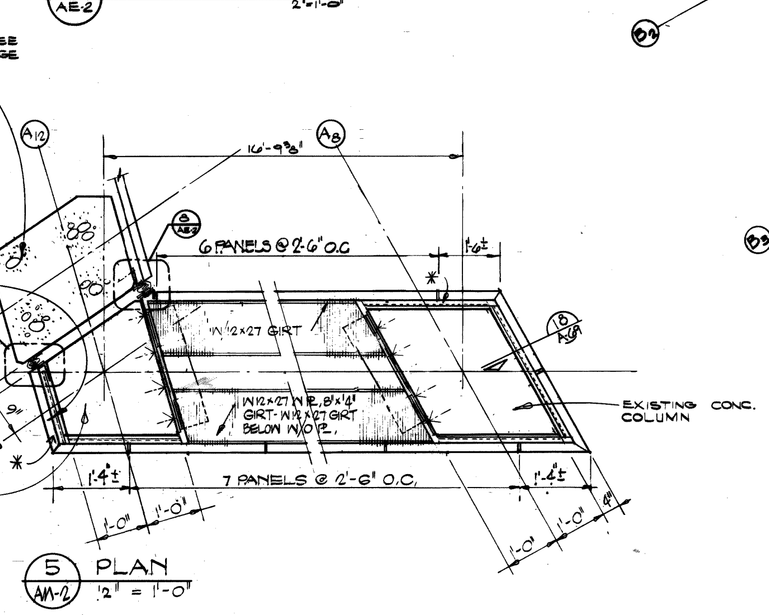

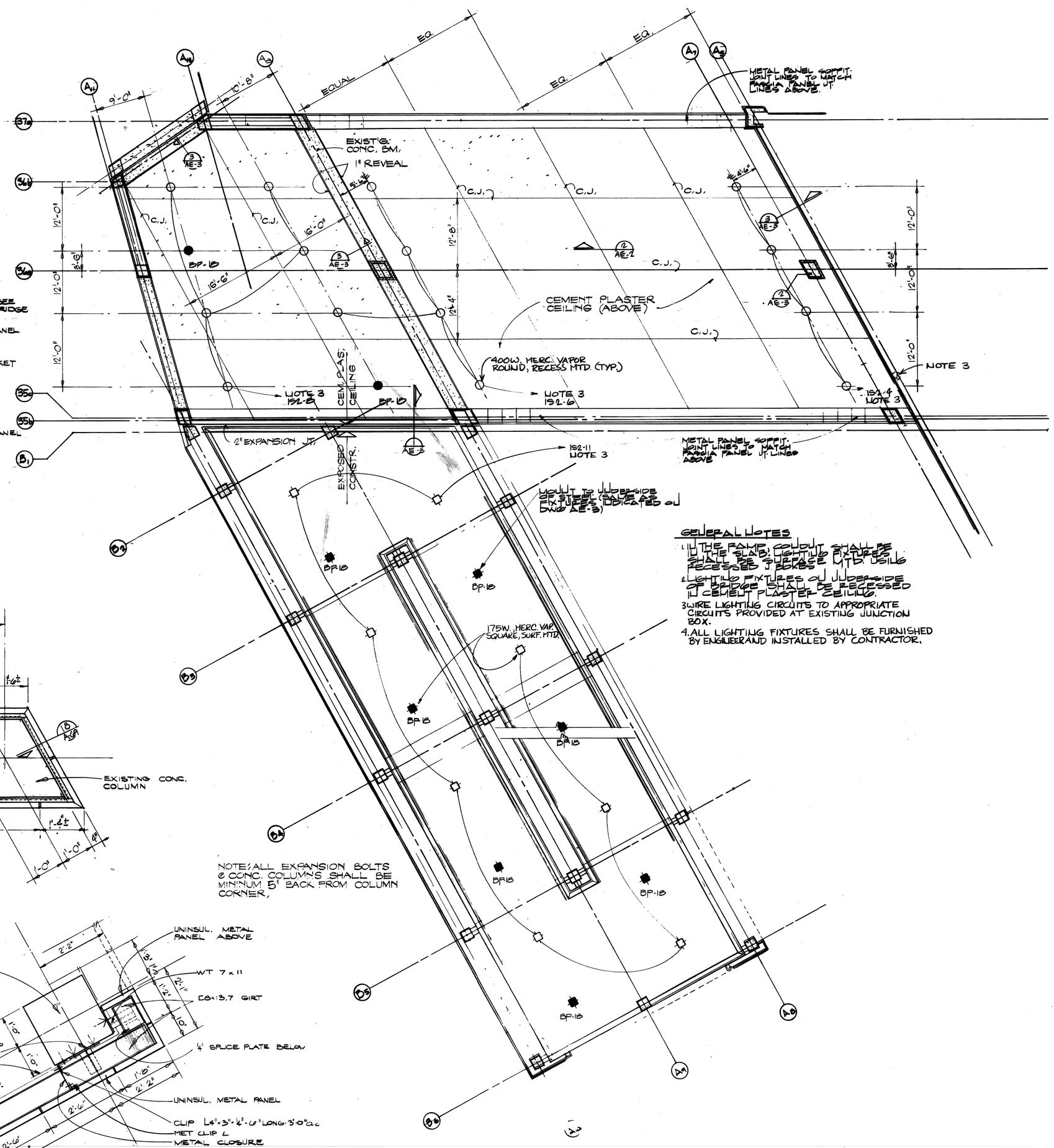

REFLECTED CEILING PLAN / INTERMEDIATE LEVEL
SCALE 1"=12'-0"

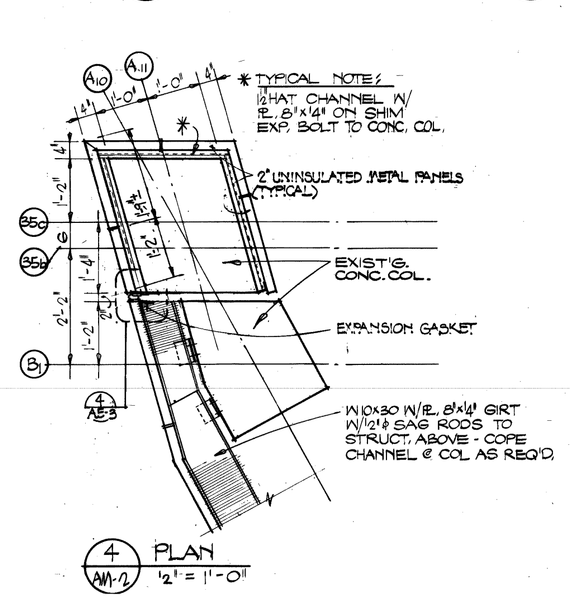

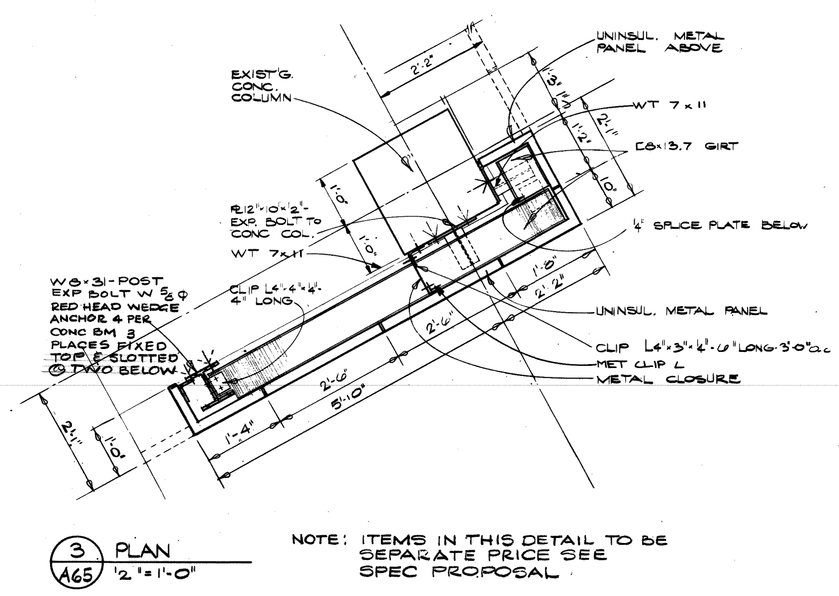

NOTE: ITEMS IN THIS DETAIL TO BE SEPARATE PRICE SEE SPEC PROPOSAL.

Joe Louis Sports Arena
Pedestrian Walkway
For City Engineering Division

SH&G
Smith, Hinchman & Grylls Associates, Inc.
Architects Engineers Planners
455 West Fort Street
Detroit, Michigan 48226
(313)964-3000
SH&G Job. No. 11732C

OWNER	5-30-80
Issued For	Date

10-2-79	C.Mc., B.F.
Date	Drawn By
Div. Architect/Engineer	
Correlation Check	
Project Manager	
Construction Administration Div. Approval	
Division Approval	

Key Plan

Detail Number / Location or Detail Sheet

N

Drawing Title
ARENA BRIDGE AND RAMP REFLECTED CEILING PLAN AND DETAILS

15031A
Project No.
AE-2
Drawing No.
AS NOTED
Scale

9-26-79

MIC/Print 71B2

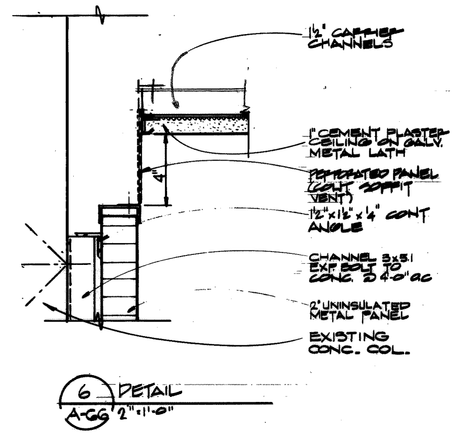

6 DETAIL A-GG SCALE 2"=1'-0"

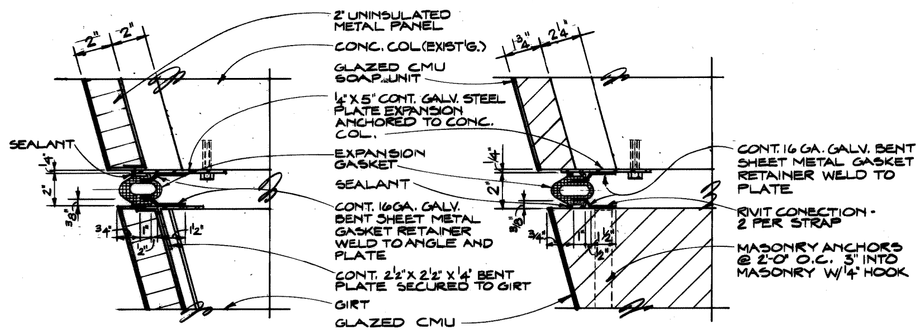

4 DETAIL AE-2 SCALE 2"=1'-0"

5 DETAIL AM-1 SCALE ½"=1'-0"

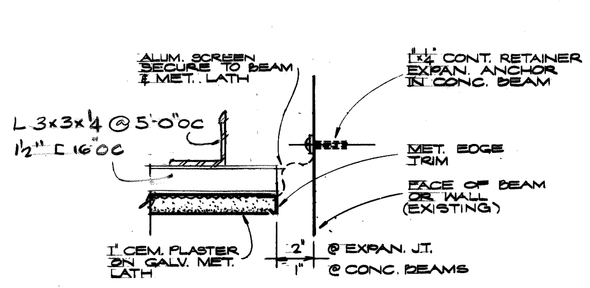

3 DETAIL AE-2 SCALE 2"=1'-0"

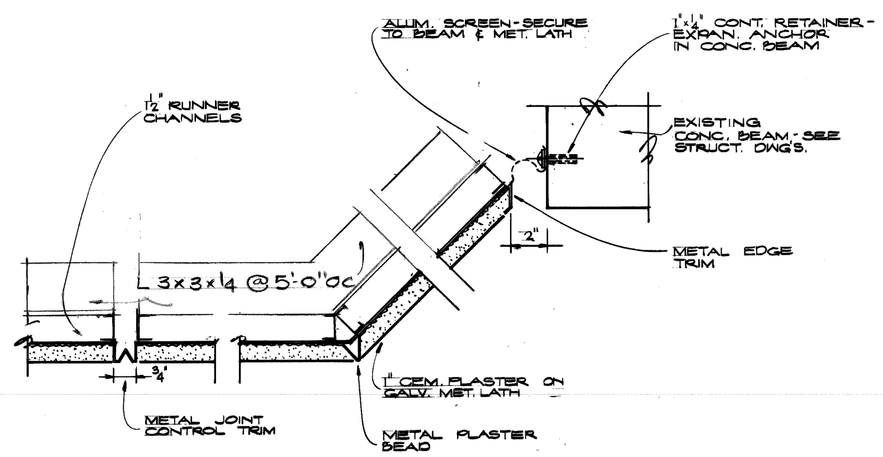

2 DETAIL AE-2 SCALE 2"=1'-0"

1 DETAIL AE-2, A6B SCALE 2"=1'-0"

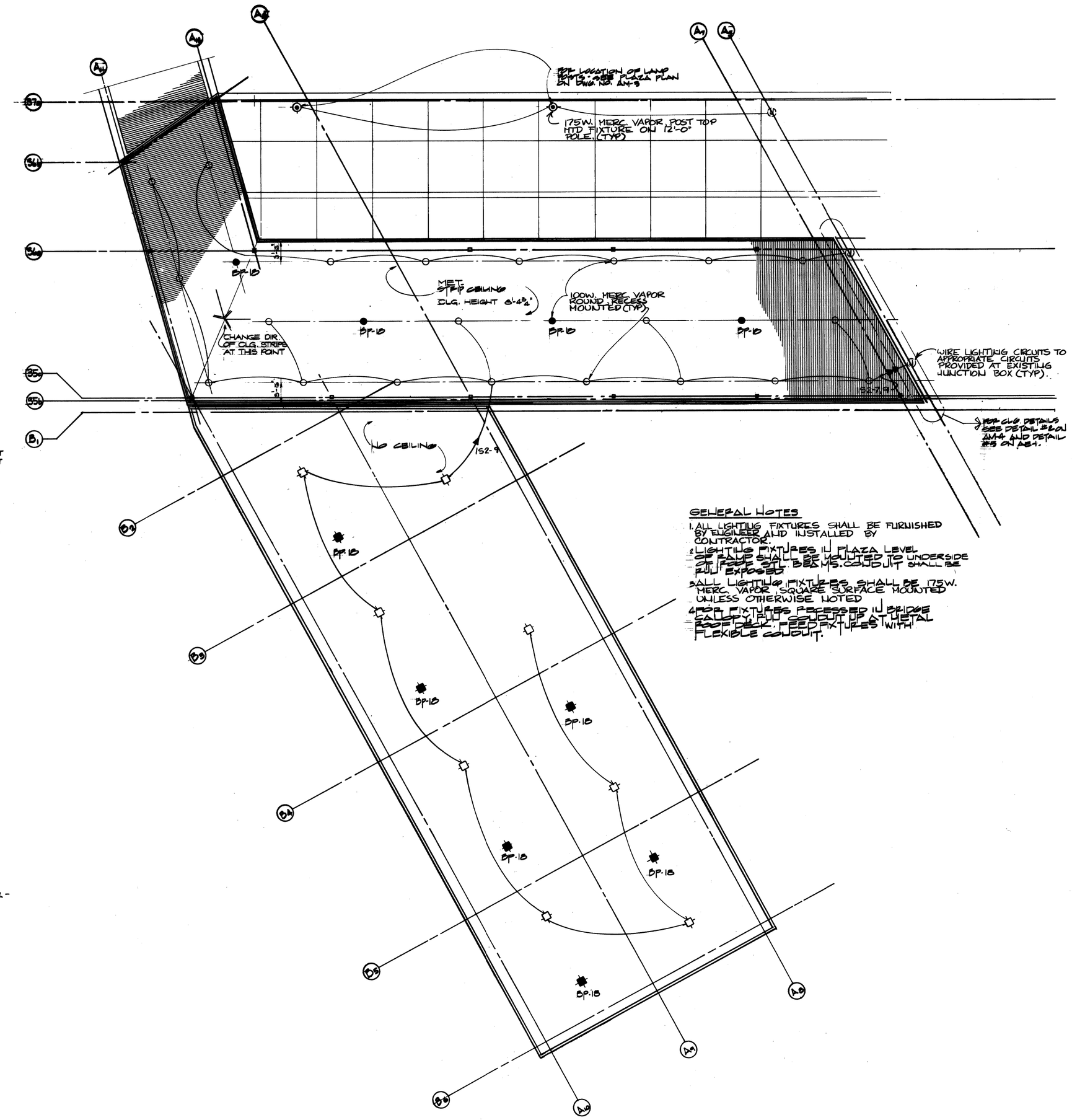

PLAZA PLAN REFLECTED CEILING
SCALE 1" = 12'-0"

GENERAL NOTES

1. ALL LIGHTING FIXTURES SHALL BE FURNISHED BY ENGINEER AND INSTALLED BY CONTRACTOR.
2. LIGHTING FIXTURES IN PLAZA LEVEL SOFFIT SHALL BE MOUNTED TO UNDERSIDE OF FASCIA SOFFIT. BRANCHES SHALL BE CONCEALED AND CONDUIT SHALL BE PAINTED TO MATCH SOFFIT WHERE EXPOSED.
3. ALL LIGHTING FIXTURES SHALL BE 175 W. MERC. VAPOR SQUARE SURFACE MOUNTED UNLESS OTHERWISE NOTED
4. ALL FIXTURES RECESSED IN BRIDGE BALLISTRADE TO BE FED UP THROUGH METAL FASCIA BELOW. FEED FIXTURES WITH FLEXIBLE CONDUIT.

Joe Louis Sports Arena
Pedestrian Walkway
For City Engineering Division

SH&G
Smith, Hinchman & Grylls Associates, Inc.
Architects Engineers Planners
455 West Fort Street
Detroit, Michigan 48226
(313)964-3000

SH&G Job. No. 11732C

OWNER — 5-30-80
Issued For — Date

10-2-79 — B.E.
Date — Drawn By
Dir. Architect/Engineer
Correlation Check
Project Manager
Construction Administration Approval
Division Approval

Key Plan

Detail Number / Location or Detail Sheet

N

Drawing Title
ARENA BRIDGE AND RAMP REFLECTED CEILING PLAN AND DETAILS
Project No. 15031A
Drawing No. AE-3
Scale AS NOTED

9-26-79

GENERAL NOTES

All Water Main construction shall be performed with materials and workmanship of the highest quality for the particular purpose and shall strictly conform to the current standards and specifications of the Detroit Water and Sewerage Department.

Pavement removal and replacement, excavation and backfilling for the entire work shall be done by the contractor, including that for work to be done by the D.W.S.D.

The contractor shall furnish all waterworks material required for the entire work, including materials for work indicated on the drawings to be done by the D.W.S.D., except for materials for services 2-inch in diameter or smaller.

After the newly constructed Water Mains have been satisfactorily pressure tested, flushed and chlorinated, the contractor shall make all connections to existing Water Mains, unless otherwise noted or shown on the drawings.

Service connections, 2-inch in diameter or smaller and their relocations will be made by D.W.S.D. Abandoned water services 2-inch in diameter or smaller on Existing Water Mains to remain in service will be abandoned at the Existing Water Mains by D.W.S.D. Services to be abandoned at the Existing Water Main or to be reconnected to the New Water Mains are not all shown on the plans.

Existing Water Mains, as shown, indicate approximate locations only as shown by D.W.S.D. records and no guarantee is made as to completeness or accuracy.

Elevations of Existing Water Mains are not known. Approximate elevations shown on the profiles are based on the assumption of 5 feet average depth. The grades of the Proposed Water Mains are subject to change to suit actual elevations of Existing Water Mains.

The locations and elevations of existing utilities are shown in accordance with available data. The Contractor shall expose these utilities, where required, to determine actual locations.

Other utilities may be making alterations to their existing systems in the vicinity of the Water Main construction shown on the plans. These utilities should be consulted for the latest information regarding the location of their facilities.
A minimum clearance of one foot vertically and three and one half feet horizontally shall be maintained between the Water Main and other utilities, unless otherwise shown on the plans or approved by the Engineer. If a conflict is indicated between the Water Main and any other utility, that utility should be consulted.

The location of Fire Hydrants, as shown, are approximate. D.F.D. will give exact location of New or Relocated Fire Hydrants prior to installation.

Elevation Datum is City of Detroit Datum.

Pipe shall have Bell and Spigot Joints designed for sealing with a Rubber Gasket such as "Tyton" "Super Bell Tight," or approved equal except that Line Valves, Hydrant Connections and Hydrant Valves shall have leaded Joints. (See Specifications)

The Drawings indicate the arrangement, general design and extent of the Water Main alterations. The Mains and connections are shown, more or less, in diagram and in their general locations, except where in certain cases the Drawings may include details giving the exact location and arrangement. Due to the small scale of the Drawings, it is not possible to indicate all offsets, fittings, valves and accessories that are required. The Contractor shall carefully investigate the structural and other conditions affecting all the work and shall arrange and perform his work under this Contract accordingly, furnishing and installing such items of material as may be required to meet such conditions.

In compliance with Public Act 53 of the State of Michigan (Effective Aug. 1, 1974), the Contractor shall notify in advance of construction all public and private owners having existing facilities in or near the immediate working area. For convenience the known utility owners are listed on this sheet. This listing does not, however, relieve the Contractor of the responsibility of verifying utility locations and notifying all utility owners and Miss Dig (Phone 482-7171 in Area Code 800)

The Detroit Edison Co.
2000 Second Ave
Detroit, Mich. 48226
Overhead 644-3040
Underground 962-2100

Mich. Consolidated Gas Co.
One Woodward Ave
Street Department 10th. Fl.
Detroit Mich. 48226
Phone 965-2430

Mich. Bell Telephone Co.
29350 Southfield Rd. Rm 25
Southfield, Mich 48076.
Phone 353-9942

Public Lighting Comm.
7500 Joseph Campau
Detroit Mich 48211
Phone 875-0972

CONSTRUCTION NOTES

All Water Main work performed by the Contractor shall require inspection by the D.W.S.D.

Encasements and Thrust Blocks shall be poured against undisturbed earth. Bottom 3" of Encasement may be poured separate from Encasement and used as a sub-footing.

All Encasements and Thrust Blocks shall terminate at the face of pipe bells.

Removal of abandoned Water Mains as required for clearance to construct the proposed Water Mains shall be done by the contractor.

The Contractor shall expose existing Water Mains at points of connection and verify their location prior to pipe laying, so that minimum work will be required.

Thrust Blocks will be required at all bends greater than 11 1/4° for C.I or D.I. Water Mains. Vertical Thrust Blocks for all top bends will require reinforcing steel.

Contractor shall construct all Concrete Thrust Blocks and Gate Wells.

The Contractor shall perform the work required to connect or disconnect water mains at junctions with the existing system which is to remain in service, except as otherwise shown. Valve operations, installation of Hydrants connecting to existing, or new Water Mains, shall be included in the Contractors Work. Flushing and chlorination will be included in D.W.S.D. work. The Contractor shall perform all other work in conjunction with D.W.S.D. work. Contractor's work includes Earth Excavation, Disposal, Backfill, Sheeting, Bracing, Pumping and Drainage required for maintenance of trench and for disposal of waste water; Barricades, Traffic Control, Material handling and Standby assistance (including crane work required), Pavement Removal and Replacement; Thrust Blocks Encasements and Gate Wells.

The Contractor shall cut and cap or plug existing Water Mains to remain in service where required.

All 4" C.I. Blow-off Assemblies, C.I. Plugs and Caps to be installed and/or removed by Contractor have not been shown on the drawings.

The Contractor shall remove all temporary C.I. Plugs, Tees and Blow-off Assemblies at points of water main connections unless otherwise specified.

The Contractor shall install all Pipe and Fittings neccessary to complete the connections shown.

Proposed construction work by other Utility Companies, as shown on these drawings, is in accordance with information supplied by the Utility Company. The D.W.S.D. does not guarantee the Completeness or accuracy of Locations of Proposed Utility Work by others. The Contractor Shall make his own investigation regarding such work.

Outline of demolished building substructures as shown on the drawings are based on the best available information. We do not guarantee that these or other underground substructures are or are not present.

Existing Water Mains to be cut and abandoned for new Water Main construction shall be bulkheaded with a minimum 8" thickness of concrete or brick mortared in place.

Exist. gate Wells on Water Mains to be Abandoned shall be broken down to an elevation of 2 feet below pavement surfaces and elsewhere to an elevation of 1 foot below the existing grade or as directed by the Engineer and/or Jurisdiction Authority. This includes the removal of frame and cover which shall become the property of the Contractor.

The gate Well shall then be backfilled in the same manner as Specified for the Water Main trench. The surface shall be restored in Kind to the surrounding area to the satisfaction of the Engineer and Jurisdiction Area.

The above work required to abandon a gate Well shall be considered as incidental to the Water Main alteration work.

WATER SYSTEM ALTERATION QUANTITIES		
DESCRIPTION OF ITEM	QUANTITIES AND PAY UNIT	AS CONSTRUCTED
16-inch Ductile Iron Water Main	129 l/in.ft.	
3'-6" x 3'-6" Reinforced Concrete Encasement	125 l/in.ft.	
Permanent Steel Sheet Piling (L.I.P.)	1,200 sq.ft.	

All Hydrant alterations involved shall be done by the Contractor in accordance with D.W.S.D. Standards and Specifications and D.F.D. requirements. Hydrant removal work shall be considered as incidental to the Water Main alteration work.

See "Standard Specifications for Paving Related Construction" dated January, 1974 as Amended, and Specifications for Paving Replacement and Isolated and Continuous Cuts in Detroit Streets Under City of Detroit Jurisdiction," dated September, 1971

LEGEND

New Water Main — under 24" — 24" and over
Existing Water Main — under 24" — 24" and over
New Water Main Connection
Water Mains to be abandoned
New Gate Valve and Well
Existing Gate Valve and Well
New Hydrant or relocated Hydrant
Existing Hydrant
Existing Sewer or Drain — under 24" — 24" and over
Gas Main
Telephone or Telegraph Conduit or Underground Cable
Electric Power Conduit or underground Cable
Petroleum Products Line
Steam Line
Trees — Size
Utility Pole — Owner
Boulevard Light
Police or Fire Alarm Box — P.B. — F.B.
Traffic Signal
Mail Box, Parking Meter, or small sign
Large Sign
Gas Stop or Drip
Catch Basin — Proposed — Existing
Sewer Manhole — Proposed — Existing
Pole Anchor
Elevation Control Monument — x B.M.
Existing Ditch
Section Line
Freeway Right of way Line
Fence
Continuous Sidewalk

CO-OR.	DESCRIPTION REVISIONS	APRVD.	DATE

DESIGNED BY
DRAWN BY
CHECKED BY TDR
ENGINEER - WASTEWATER SYSTEM L E Duke 4-29-80

APPROVED
HEAD ENGINEER - WATER SYSTEM 4/29/80
DIVISION ENGINEER D.W.S.D.

JOE LOUIS ARENA PEDESTRIAN WALKWAY SYSTEM
PROPOSED 16-INCH WATER MAIN RELOCATION
GENERAL NOTES AND QUANTITIES

SCALE
DATE

CITY OF DETROIT
WATER AND SEWERAGE DEPARTMENT
ENGINEERING DIVISION

SECTION MAP	TOWN	RANGE	SECTION	PORTION CODE	WORK ORDER NO.
20 J-1					D-272

M.D.P.H. PERMIT NO.
FED. REF. NO.
CONTRACT NO. 15031A
DRAWING NO. SHEET W1 OF 4

72 OF 916

TSR 20 32 01 9-78 6642M

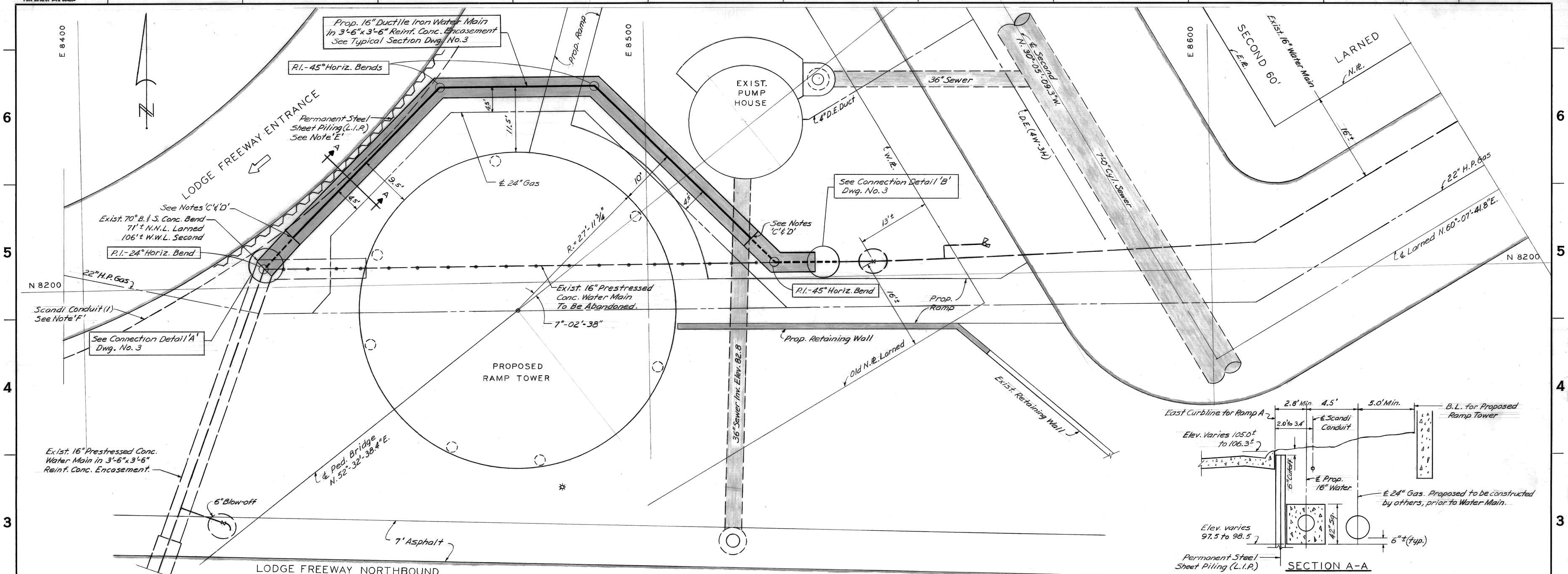

PLAN
Scale: 1/8" = 1'-0"

SECTION A-A
Scale: 1/4" = 1'-0"

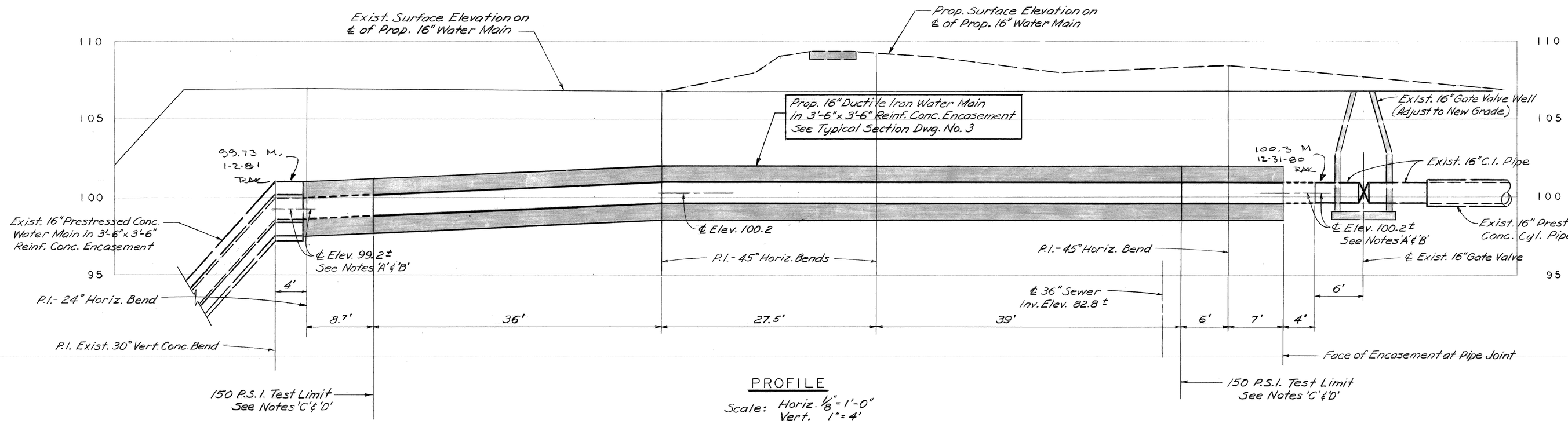

PROFILE
Scale: Horiz. 1/8" = 1'-0"
Vert. 1" = 4'

NOTES

'A' ℄ Prop. Water Main shall meet ℄ Exist. Water Main.

'B' Contractor shall expose Exist. 16" Water Main at point of connection and verify the existing location prior to construction.

'C' Construction Joint shall be placed at a Pipe Joint and shall have a 2"x 4" keyway centered on longitudinal steel.

'D' Temp. 16" C.I. Plug braced to withstand 150 P.S.I. Test Pressure.

'E' Water Main Encasement shall not be poured directly against sheeting. Contractor shall carefully backfill between sheeting and encasement form. Permanent Steel Sheet Piling shall be PDA 27 or PZ 27 with a minimum of 13 Ft. embedment below the excavation. Vertical pay limits shall be 20 ft. per lineal foot of sheet piling.

'F' The Scandi Conduit (1) shown in Section A-A shall be protected during construction by the Contractor who shall be liable for any damage.

	DESCRIPTION REVISIONS	CHK'D	APRV'D	DATE
F				
E				
D				
C				
B				
A				

DESIGNED BY TDR
DRAWN BY R. T. D.
CHECKED BY TDR
ENGINEER - WASTEWATER SYSTEM

APPROVED
HEAD ENGINEER - WATER SYSTEM
DIVISION ENGINEER D. W. S. D.

JOE LOUIS ARENA PEDESTRIAN WALKWAY SYSTEM
PROPOSED 16-INCH WATER MAIN RELOCATION
N. S. LODGE FREEWAY AT SECOND AND LARNED
PLAN AND PROFILE

SCALE: AS SHOWN
DATE

CITY OF DETROIT
WATER AND SEWERAGE DEPARTMENT
ENGINEERING DIVISION

SECTION MAP	TOWN	RANGE	SECTION	PORTION CODE	WORK ORDER NO.
20 J-1					D-272

M.D.P.H./D.N.R. PERMIT NO.
FED. REF. NO.
CONTRACT NO. 15031A
FILE NO.
DRAWING NO. SHEET W2 OF 4

TSR 2052.01 9-76 68420*

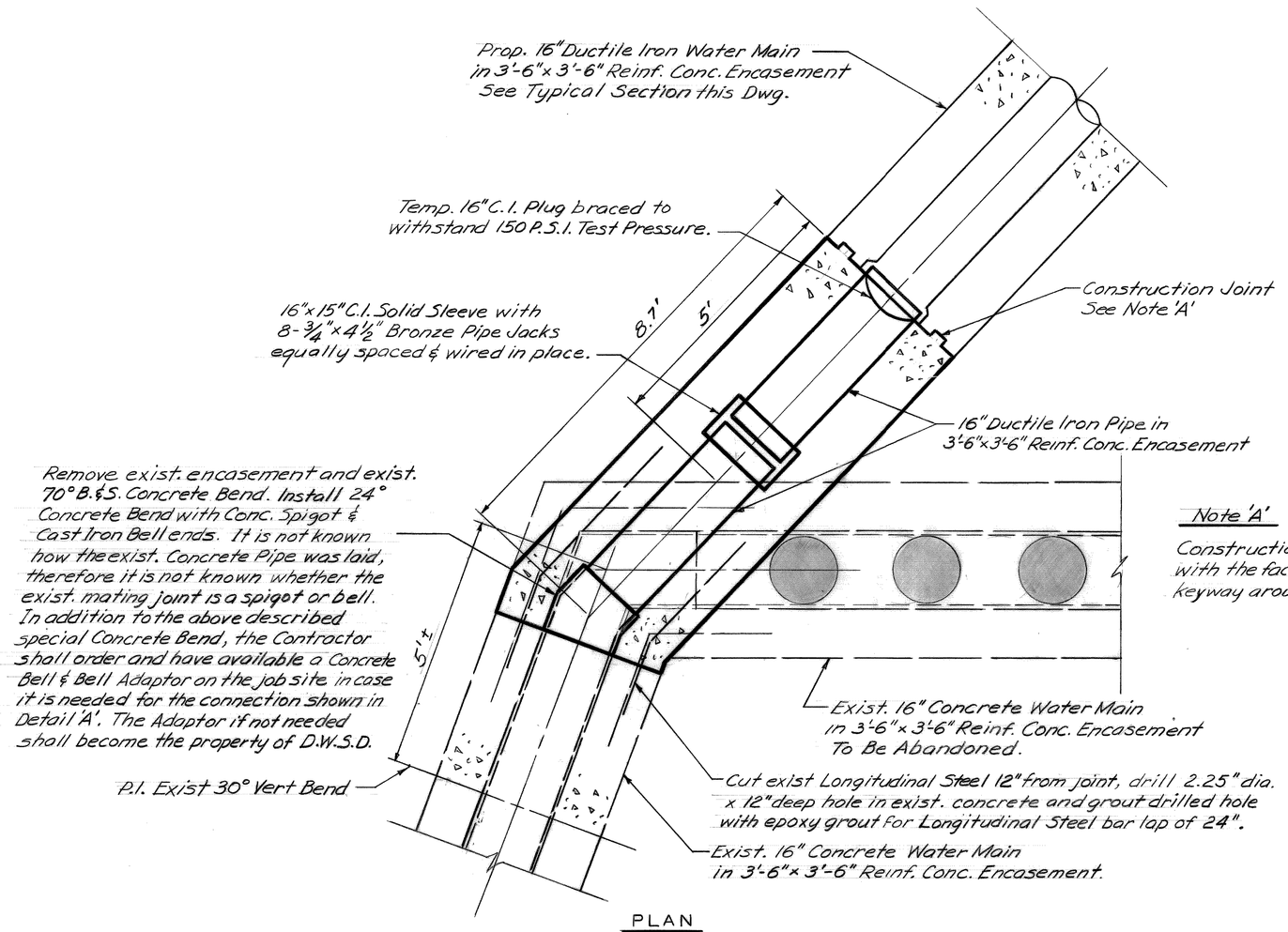

PLAN

DETAIL 'A'

Scale: $\frac{1}{2}$" = 1'-0"

Note 'A'

Construction Joints in the encasement shall coincide with the face of Pipe Bells and have a continuous keyway around the reinforcing cage 4" wide by 2" deep.

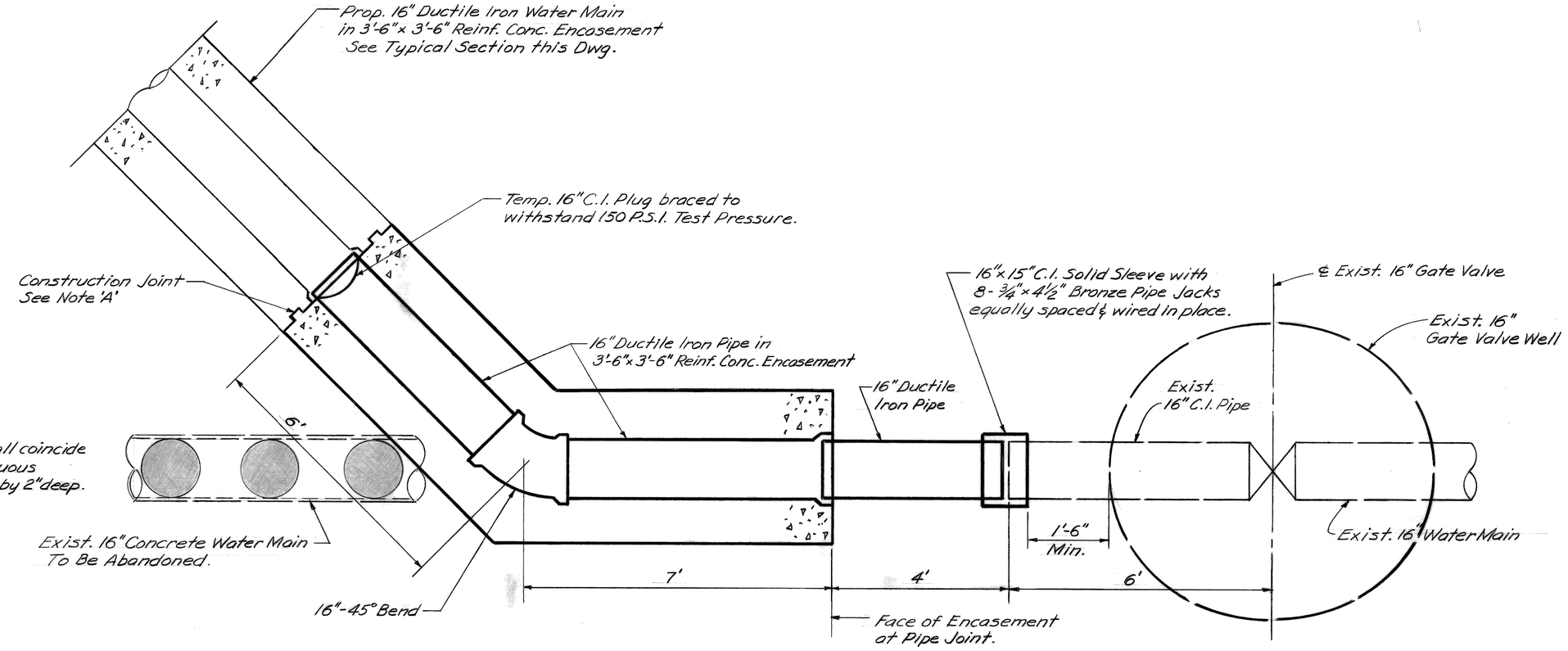

PLAN

DETAIL 'B'

Scale: $\frac{1}{2}$" = 1'-0"

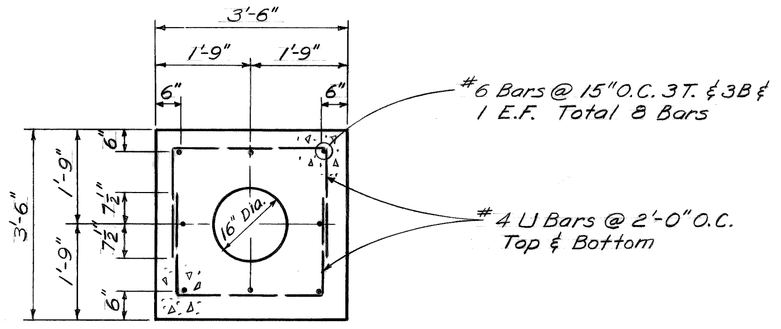

TYPICAL SECTION OF 16" D.I. WATER MAIN IN 3'-6"x 3'-6" REINF. CONC. ENCASEMENT

Scale: $\frac{1}{2}$" = 1'-0"

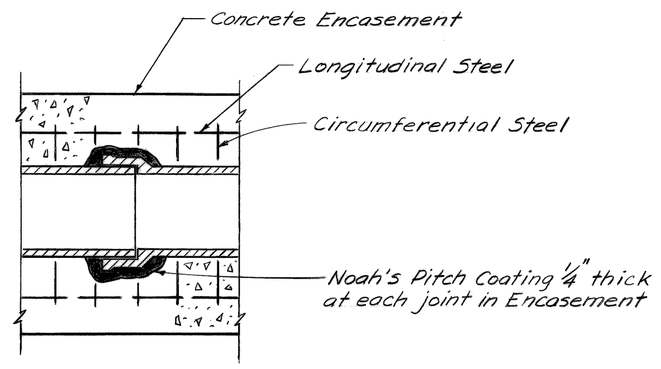

DETAIL OF DUCTILE IRON JOINT IN ENCASEMENT

No Scale

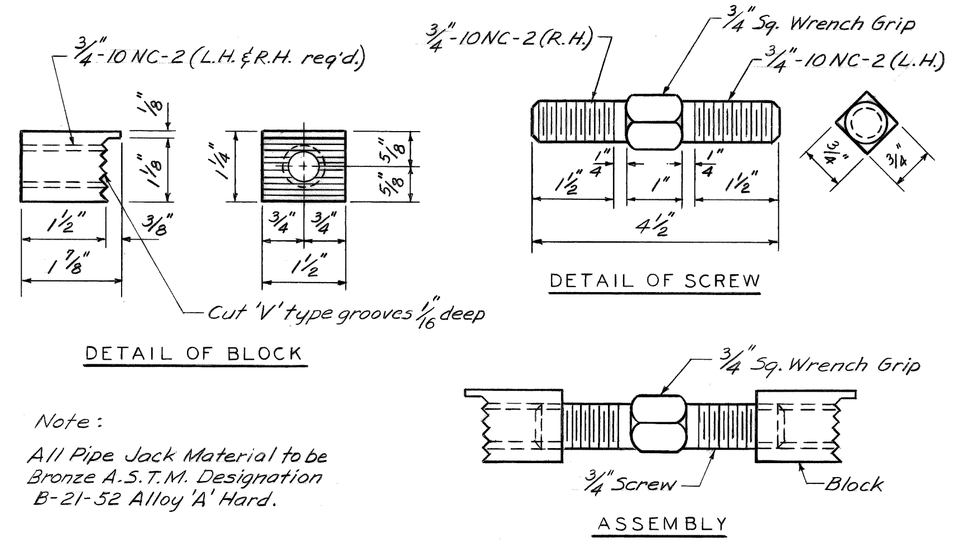

DETAIL OF ¾" x 4½" PIPE JACK

Scale: Half Size 16 Required

F					DESIGNED BY TDR
E					DRAWN BY R.T.D.
D					CHECKED BY TDR
C					ENGINEER – WASTEWATER SYSTEM
B					
A					
	DESCRIPTION REVISIONS	CHK'D	APRVD.	DATE	

APPROVED

HEAD ENGINEER – WATER SYSTEM

DIVISION ENGINEER D. W. S. D.

JOE LOUIS ARENA PEDESTRIAN WALKWAY SYSTEM
PROPOSED 16-INCH WATER MAIN RELOCATION

16-INCH WATER MAIN ENCASEMENT, PIPE JACK AND CONNECTION DETAILS

SCALE: AS SHOWN DATE

CITY OF DETROIT
WATER AND SEWERAGE DEPARTMENT
ENGINEERING DIVISION

SECTION MAP	TOWN	RANGE	SECTION	PORTION CODE	WORK ORDER NO.
20 J-1					D-272

M.D.P.H./D.N.R. PERMIT NO.

FED. REF. NO.

CONTRACT NO. 15031A

FILE NO.

DRAWING NO. SHEET W 3 OF 4

74 OF 96

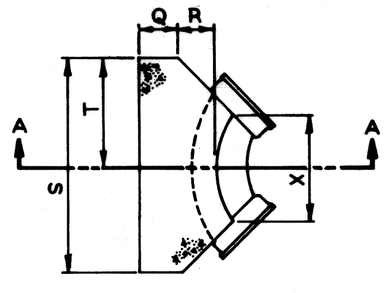

PLAN

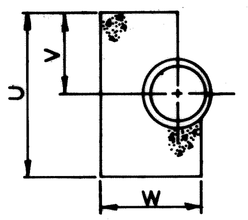

SECTION A-A

SCHEDULE OF THRUST BLOCK DIMENSIONS								
BEND SIZE	Q	R	S	T	U	V	W	X
6"-22½°&45°	0'-9"	1'-0"	2'-0"	1'-0"	1'-6"	0'-9"	1'-11"	1'-4"
6"-90°	0'-9"	1'-0"	3'-0"	1'-6"	2'-0"	1'-0"	1'-11"	1'-2"
8"-22½°&45°	0'-9"	1'-0"	2'-4"	1'-2"	2'-0"	1'-0"	1'-11"	1'-4"
8"-90°	0'-9"	1'-0"	3'-4"	1'-8"	2'-6"	1'-3"	1'-11"	1'-2"
12"-22½°	0'-9"	1'-0"	2'-6"	1'-3"	2'-0"	1'-0"	2'-0"	1'-4"
12"-45°	0'-9"	1'-4"	3'-6"	1'-9"	2'-6"	1'-3"	2'-4"	1'-4"
12"-90°	0'-9"	1'-4"	5'-6"	2'-9"	3'-0"	1'-6"	2'-4"	1'-8"
16"-22½°	1'-0"	1'-8"	3'-4"	1'-8"	2'-6"	1'-3"	3'-0"	1'-2"
16"-45°	1'-0"	1'-8"	5'-4"	2'-8"	3'-0"	1'-6"	3'-0"	2'-6"
16"-90°	1'-0"	1'-8"	6'-0"	3'-0"	5'-0"	2'-6"	3'-0"	2'-8"

DETAIL OF STANDARD THRUST BLOCKS FOR BENDS

Not to Scale

NOTES

The bearing face of all Thrust Blocks shall be poured against undisturbed earth.

Thrust Blocks when required for vertical bends are shown by special details.

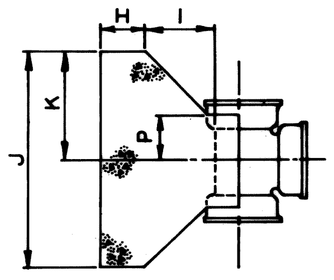

PLAN

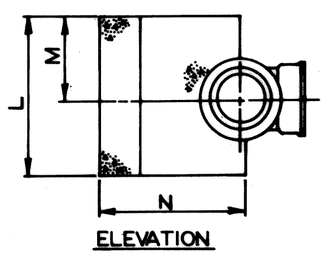

ELEVATION

SCHEDULE OF THRUST BLOCK DIMENSIONS								
TEE SIZE	H	I	J	K	L	M	N	P
6"×6"	0'-9"	1'-0"	2'-6"	1'-3"	1'-6"	0'-9"	2'-3"	0'-6"
8"×8"	0'-9"	1'-0"	3'-0"	1'-6"	2'-0"	1'-0"	2'-3"	0'-6"
10"×10"	0'-9"	1'-2"	3'-6"	1'-9"	2'-6"	1'-3"	2'-7"	0'-7"
12"×8"	0'-9"	1'-0"	3'-0"	1'-6"	2'-0"	1'-0"	2'-5"	0'-6"
12"×12"	0'-9"	1'-4"	4'-0"	2'-0"	3'-0"	1'-6"	2'-9"	0'-8"
16"×8"	0'-9"	1'-0"	3'-0"	1'-6"	2'-0"	1'-0"	2'-9"	0'-6"
16"×12"	0'-9"	1'-4"	4'-0"	2'-0"	3'-0"	1'-6"	3'-1"	0'-8"
16"×16"	1'-0"	1'-8"	5'-0"	2'-6"	4'-0"	2'-0"	3'-8"	0'-11"

DETAIL OF STANDARD THRUST BLOCKS FOR TEES

Not to Scale

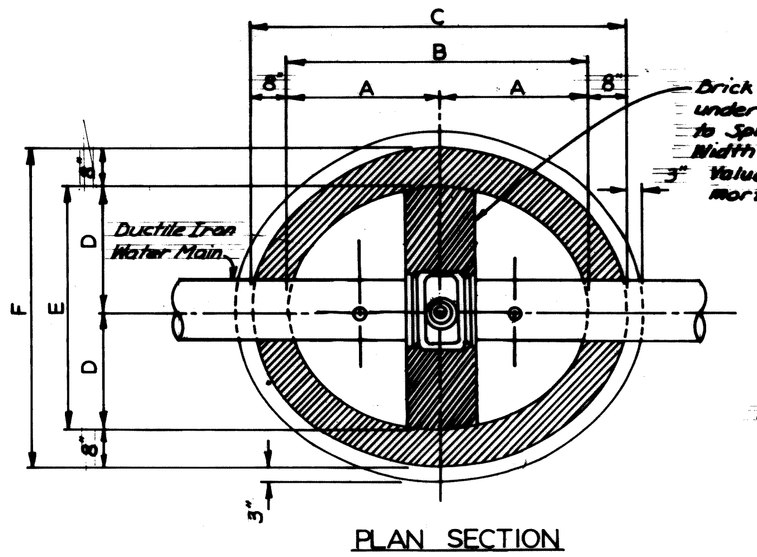

PLAN SECTION

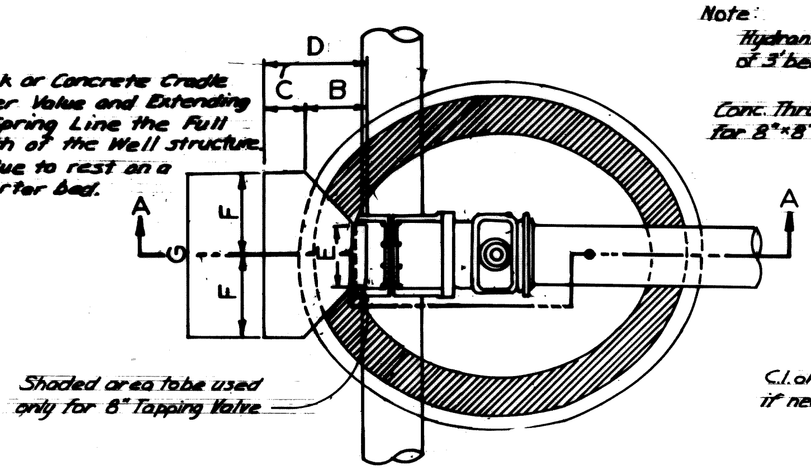

PLAN SECTION

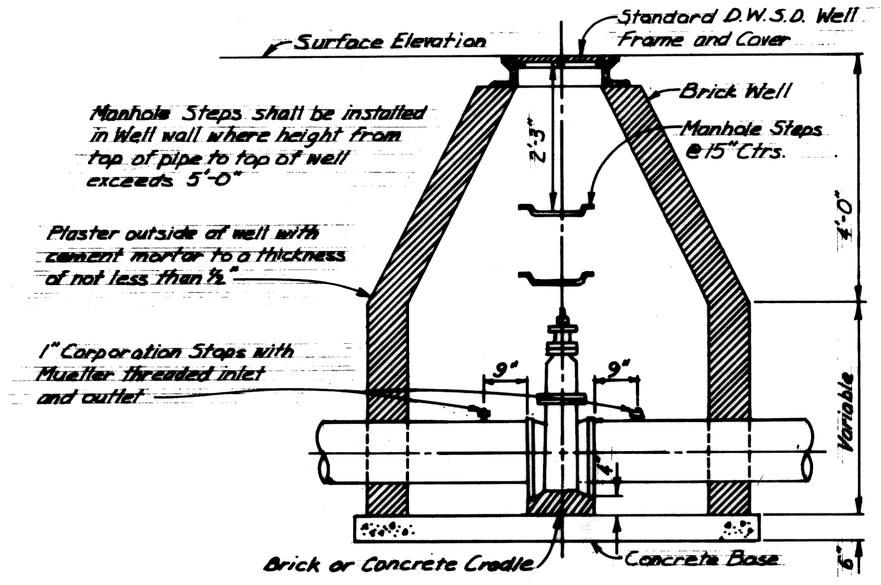

SECTION THROUGH GATE WELL

SCHEDULE OF GATE WELL DIMENSIONS						
SIZE	A	B	C	D	E	F
6"	2'-6"	5'-0"	6'-4"	2'-0"	4'-0"	5'-4"
8"	2'-6"	5'-0"	6'-4"	2'-0"	4'-0"	5'-4"
12"	2'-9"	5'-6"	6'-10"	2'-3"	4'-6"	5'-10"
16"	3'-0"	6'-0"	7'-4"	2'-9"	5'-6"	6'-10"

DETAIL OF STANDARD GATE WELLS

Not to Scale

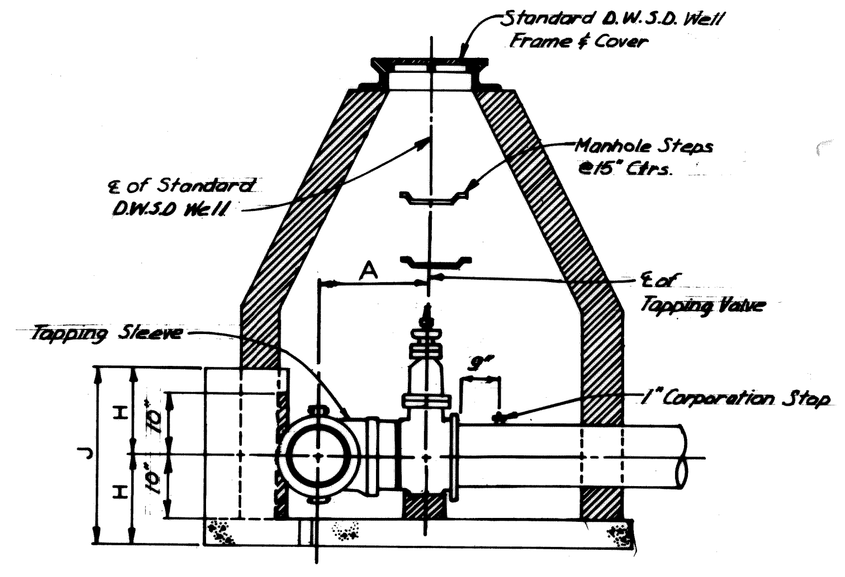

SECTION A-A

SCHEDULE OF STANDARD THRUST BLOCK DIMENSIONS FOR TAPPING VALVE									
SIZE	A	B	C		E	F	G	H	J
8"×8"	1'-6¾"				0'-7"				
12"×8"	1'-9"				0'-7"				
16"×8"	1'-11½"				0'-7½"				
12"×12"	1'-8¾"	1'-6"	0'-9"	2'-3"	0'-7"	1'-9"	3'-6"	1'-6"	3'-0"
16"×12"	1'-11¾"	1'-6"	0'-9"	2'-3"	0'-10½"	1'-9"	3'-6"	1'-6"	3'-0"
16"×16"	2'-2"	2'-7"	1'-0"	3'-7"	0'-10½"	2'-11"	5'-10"	1'-8"	3'-4"

DETAIL OF STANDARD THRUST BLOCKS FOR TAPPING VALVES

Not to Scale

Note:
Hydrant to be a minimum of 3' behind the curb

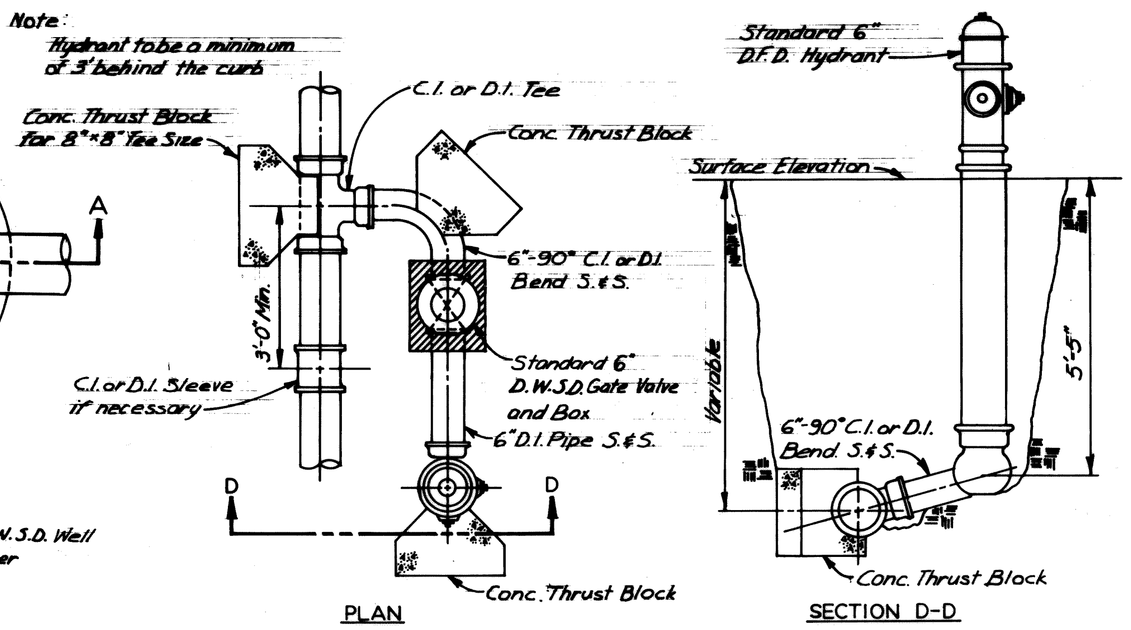

DETAIL OF 6" HYDRANT INSTALLATION OFF SET

Not to Scale

DETAIL OF 6" HYDRANT INSTALLATION STRAIGHT AWAY

Not to Scale

SCHEDULE OF THRUST BLOCK DIMENSIONS							
PLUG SIZE	A	B	C	D	E	F	G
6"	0'-9"	1'-2"	3'-0"	1'-6"	2'-0"	1'-0"	1'-11"
8"	0'-9"	1'-2"	3'-0"	1'-6"	2'-0"	1'-0"	1'-11"
12"	0'-9"	1'-4"	4'-0"	2'-0"	3'-0"	1'-6"	2'-1"
16"	1'-0"	1'-8"	5'-0"	2'-6"	4'-0"	2'-0"	2'-8"
CAP SIZE	H	I	J	K	L	M	N
6"	0'-9"	1'-2"	3'-0"	1'-6"	2'-0"	1'-0"	1'-11"
8"	0'-9"	1'-2"	3'-0"	1'-6"	2'-0"	1'-0"	1'-11"
12"	0'-9"	1'-4"	4'-0"	2'-0"	3'-0"	1'-6"	2'-1"
16"	1'-0"	1'-8"	5'-0"	2'-6"	4'-0"	2'-0"	2'-8"

DETAIL OF STANDARD THRUST BLOCKS FOR PLUGS AND CAPS

Not to Scale

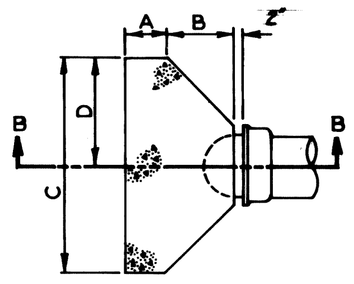

PLAN

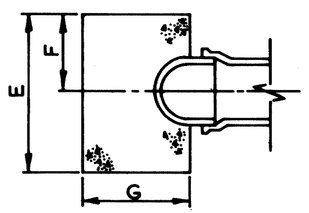

SECTION B-B

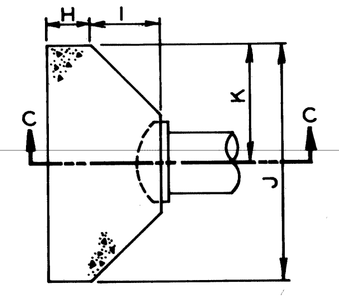

PLAN

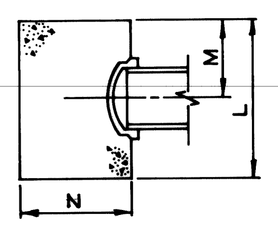

SECTION C-C

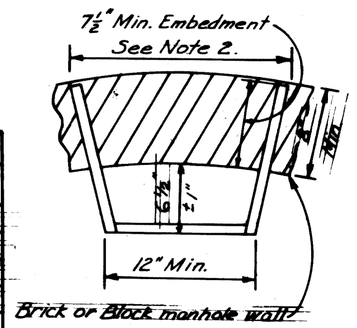

PLAN VIEW (For use with Brick or Block M.H.)

ALUMINUM MANHOLE STEP

Not to Scale

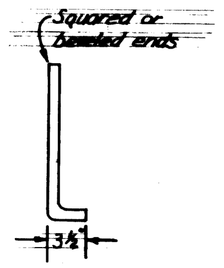

Note:
1. In lieu of grooves, alternate foot hold configurations will be considered for approval.
2. Flared legs shall be radial to the manhole wall.

Note:
~~Manhole steps shall conform to the requirements for "Aluminum Alloy Extruded Bars, Rods, Shapes and Tubes", A.S.T.M. B221 (current), Alloy 6061, Temper T-6, or approved equal.~~

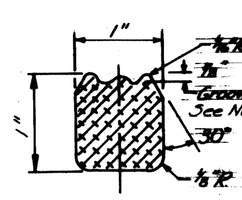

CROSS SECTION OF STEP

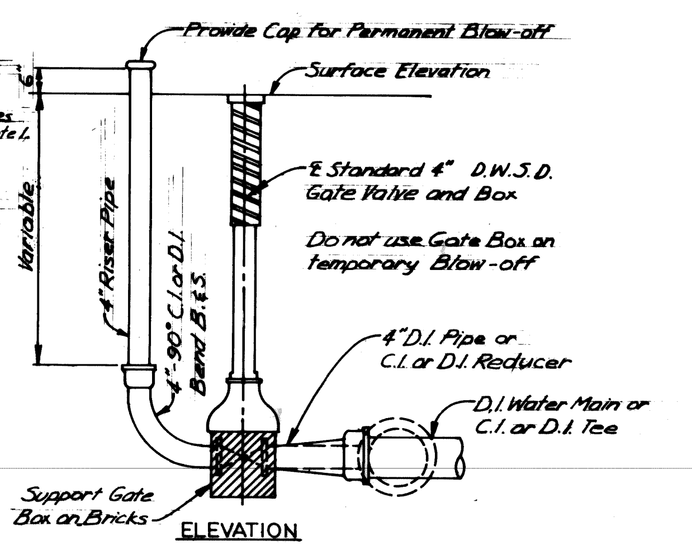

ELEVATION

DETAIL OF 4" BLOW-OFF

Not to Scale

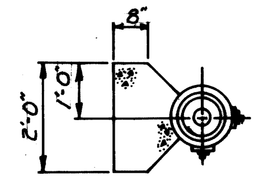

PLAN

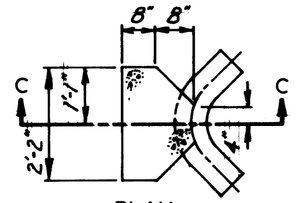

PLAN

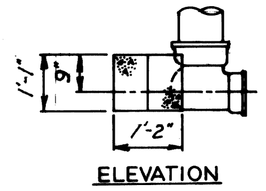

ELEVATION

THRUST BLOCK FOR 6" HYDRANT

Not to Scale

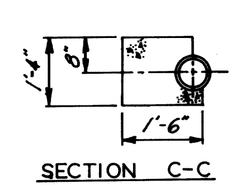

SECTION C-C

THRUST BLOCK FOR 6" HYDRANT BEND

Not to Scale

Note:
The bearing face of Thrust Blocks shall be poured against undisturbed earth.

REVISIONS			
CO-OR.	DESCRIPTION	APRVD.	DATE

DESIGNED BY

DRAWN BY R.A.C.

CHECKED BY R.T.D. TDR

ENGINEER - WASTEWATER SYSTEM

APPROVED

HEAD ENGINEER - WATER SYSTEM

DIVISION ENGINEER D. W. S. D.

JOE LOUIS ARENA PEDESTRIAN WALKWAY SYSTEM
PROPOSED 16-INCH WATER MAIN RELOCATION

MISCELLANEOUS DETAILS

SCALE AS SHOWN

DATE

CITY OF DETROIT
WATER AND SEWERAGE DEPARTMENT

SECTION MAP	TOWN	RANGE	SECTION	PORTION CODE	WORK ORDER NO.
20 J-1					D-272

M.D.P.H. PERMIT NO.

FED. REF. NO.

CONTRACT NO. 15031A

DRAWING NO. SHEET W4 OF 4

F.H.W.A. REG. NO.	STATE	FEDERAL PROJECT	R.O.W. NO.	SHEET NO.	TOTAL SHEETS
5	MICH.				
ROUTE	COUNTY	CONTROL SECTION	JOB NO.		

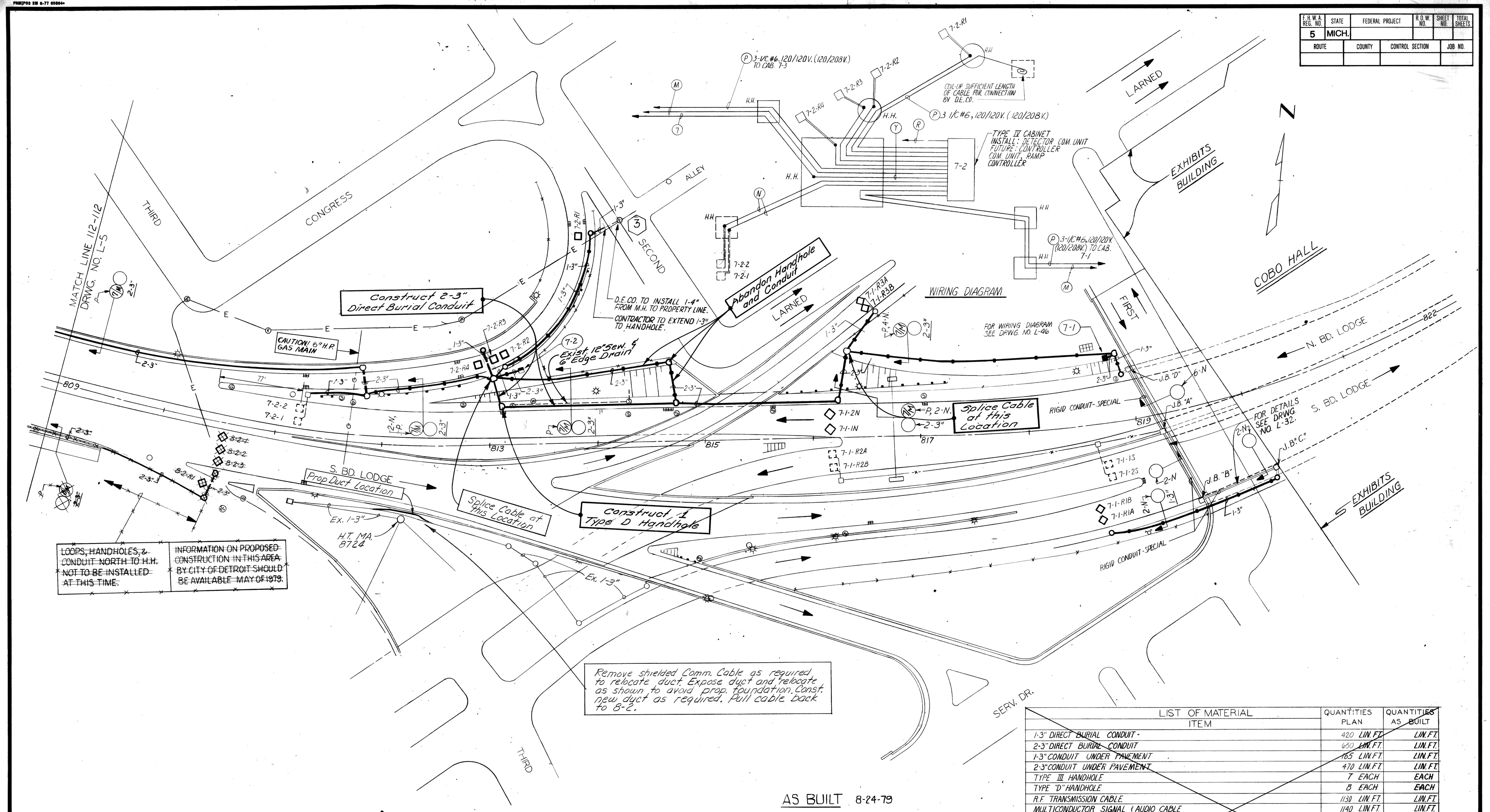

LOOPS, HANDHOLES, & CONDUIT NORTH TO H.H. NOT TO BE INSTALLED AT THIS TIME.	INFORMATION ON PROPOSED CONSTRUCTION IN THIS AREA BY CITY OF DETROIT SHOULD BE AVAILABLE MAY OF 1979.

Remove shielded Comm. Cable as required to relocate duct. Expose duct and relocate as shown to avoid prop. foundation. Const. new duct as required. Pull cable back to 8-2.

AS BUILT 8-24-79

LIST OF MATERIAL ITEM	QUANTITIES PLAN	QUANTITIES AS BUILT
1-3" DIRECT BURIAL CONDUIT -	420 LIN.FT.	LIN.FT.
2-3" DIRECT BURIAL CONDUIT	650 LIN.FT.	LIN.FT.
1-3" CONDUIT UNDER PAVEMENT	165 LIN.FT.	LIN.FT.
2-3" CONDUIT UNDER PAVEMENT	470 LIN.FT.	LIN.FT.
TYPE III HANDHOLE	7 EACH	EACH
TYPE "D" HANDHOLE	8 EACH	EACH
R.F. TRANSMISSION CABLE	1130 LIN.FT.	LIN.FT.
MULTICONDUCTOR SIGNAL & AUDIO CABLE	1140 LIN.FT.	LIN.FT.
SHIELDED PAIR COMMS. CABLE	LIN.FT.	LIN.FT.
DETECTOR LOOPS	10 EACH	EACH
3/c POWER CABLE	1480 LIN.FT.	LIN.FT.
RIGID CONDUIT - SPECIAL	280 LIN.FT.	LIN.FT.

NOTE:

The Contractor is cautioned not to disturb any of the SCANDI wiring other than those being relocated.

PLAN
SCALE: 1"=40'

DRAWING REVISION LETTER	CHANGE DESCRIPTION
A	DELETED CONDUIT RISER IN ALLEY E. OF SECOND AVE. (USE D.E.CO. M.H. 2620)
A	DELETED CABLES FROM CAB. 8-3 SOUTH.
A	CHANGED LOOPS, H.H.'S., CONDUITS, CABLING. (S.BD. LODGE NEAR STA. 810±)

REVISION LETTER A

SPERRY SYSTEMS MANAGEMENT GREAT NECK, NEW YORK 11020

DRAWN CEA
CHECKED
APPROVED
DATE 2-19-79

PLAN PREPARED BY CONSULTING ENGINEERING ASSOCIATES INC. ENGINEERING CONSULTANTS
16580 WYOMING DETROIT, MICH 48221

DRWG. NO. L-4 | SHEET NO. | FILE NO.

MICHIGAN DEPARTMENT OF STATE HIGHWAYS AND TRANSPORTATION
DETROIT AREA FREEWAY SURVEILLANCE, CONTROL & DRIVER INFORMATION SYSTEM
GENERAL PLAN

CONTROL SECTION | JOB NO. 15031A | FEDERAL PROJECT | R.O.W. NO. | SHEET NO.

CONTROL SECTION	JOB NO. 15031A	FEDERAL PROJECT	R.O.W. NO.	SHEET NO.

77 OF 96

REVISION LETTER								DRAWN C.E.A.	PLAN PREPARED BY CONSULTING ENGINEERING ASSOCIATES INC. ENGINEERING CONSULTANTS	16580 WYOMING DETROIT, MICH 48221	DRWG NO. D-1	F.H.W.A. REG. NO. 5	STATE MICH.	FEDERAL PROJECT	R.O.W. NO.	SHEET NO.	TOTAL SHEETS	ROUTE	COUNTY	CONTROL SECTION	JOB NO.
								CHECKED	SPERRY SYSTEMS MANAGEMENT GREAT NECK, NEW YORK 11020		SHEET NO.										
								APPROVED			DATE										

MICHIGAN DEPARTMENT OF STATE HIGHWAYS AND TRANSPORTATION
DETROIT AREA FREEWAY SURVEILLANCE, CONTROL & DRIVER INFORMATION SYSTEM
TYPE "D" HANDHOLE AND TYPE III HANDHOLE

TYPE III HANDHOLE
N.T.S.

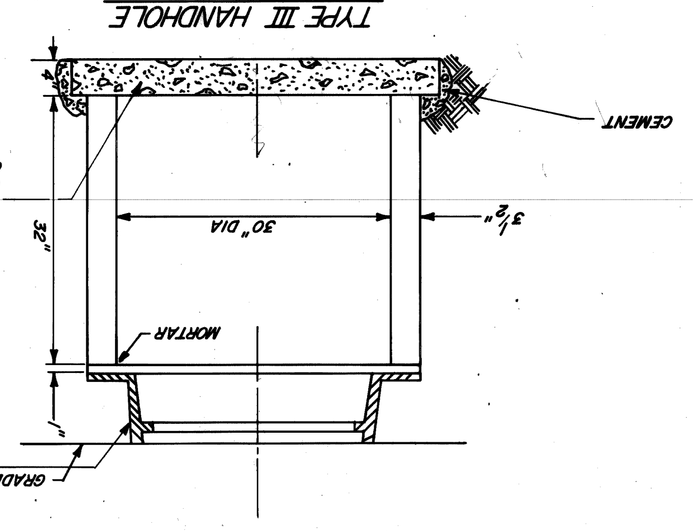

REINFORCED CONCRETE PIPE (CLASS III)
N.T.S.

PULLING IRON
N.T.S.

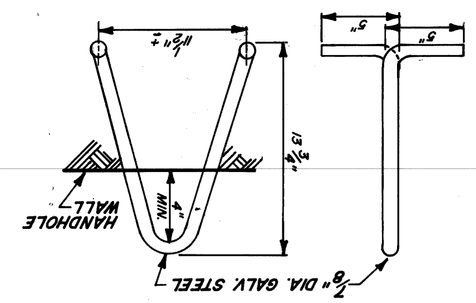

TYPE "D" HANDHOLE
SQUARE SHAPE
N.T.S.

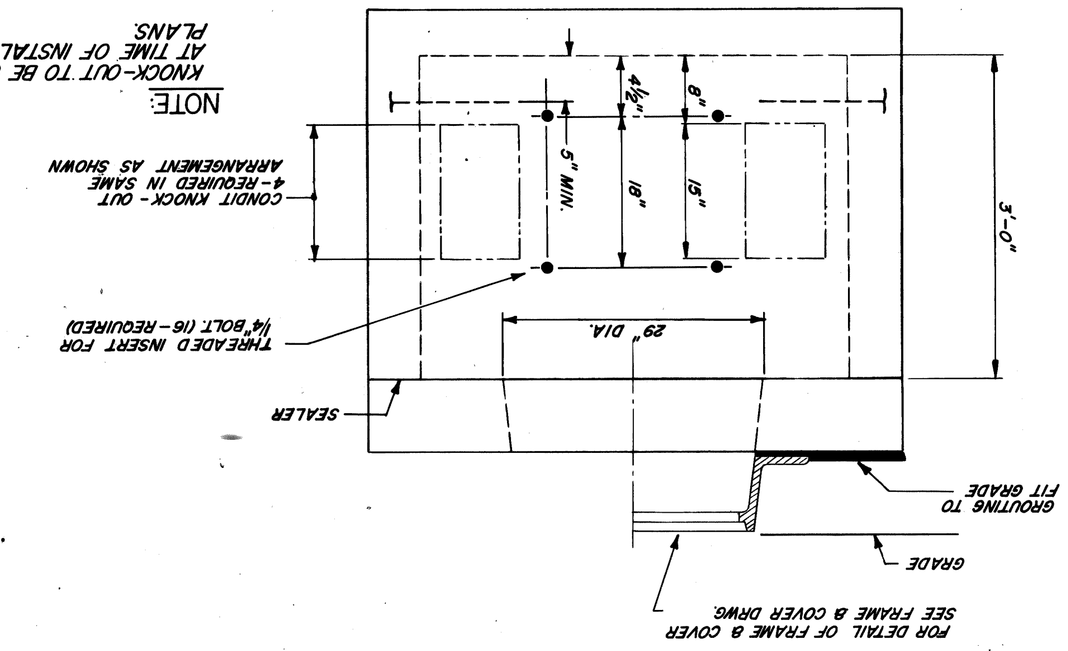

NOTE:
KNOCK-OUT TO BE UTILIZED BY CONTRACTOR AT TIME OF INSTALLATION AS INDICATED ON PLANS.

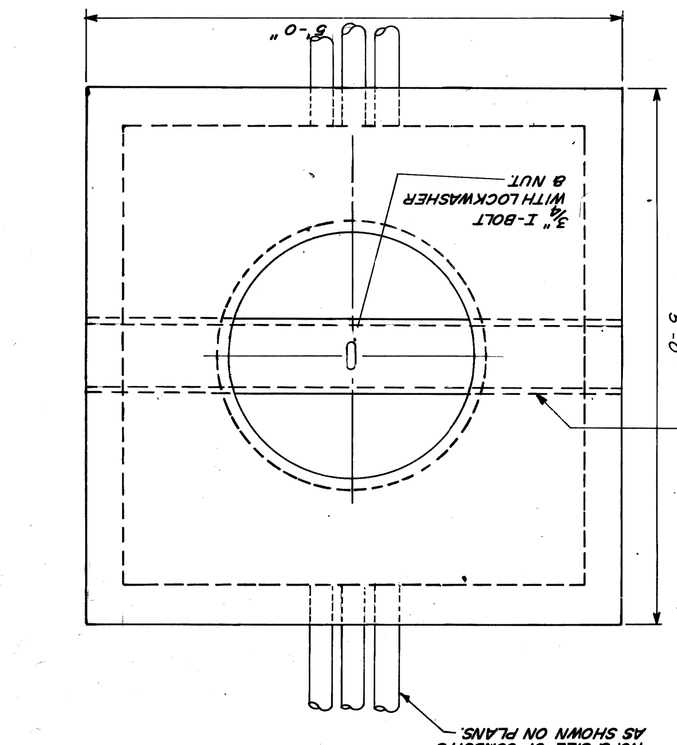

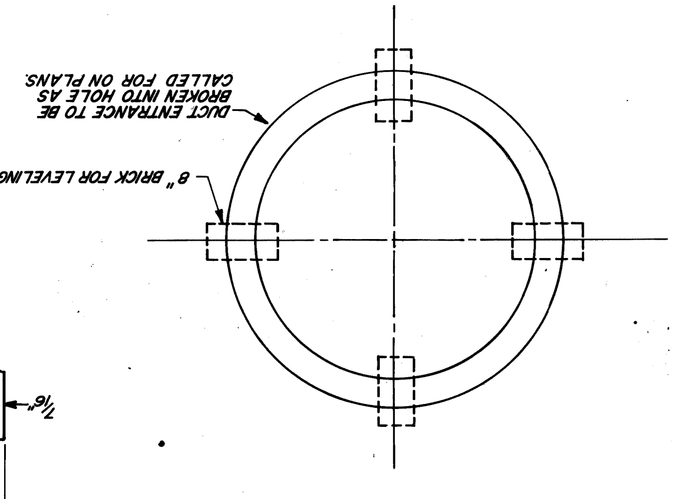

DETAIL SHOWING INSTALLATION OF R.F. TRANSMISSION CABLE

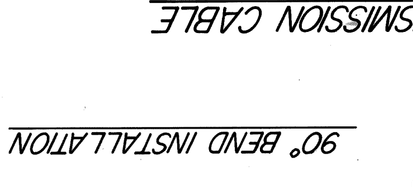

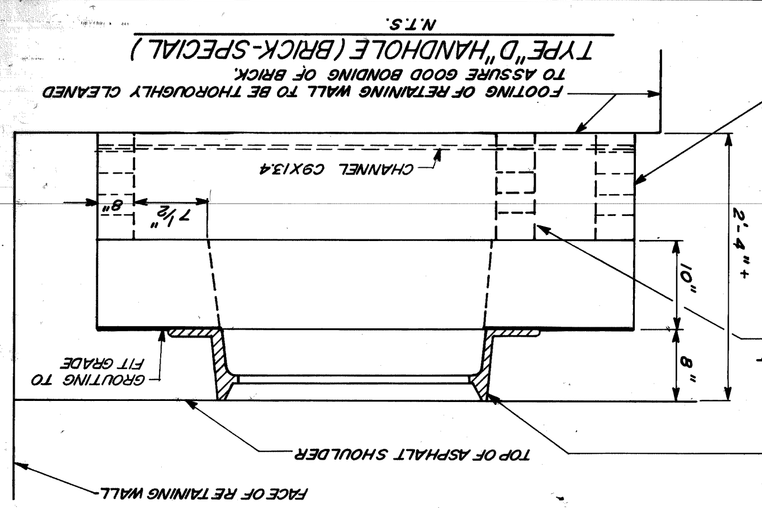

TYPE "D" HANDHOLE (BRICK-SPECIAL)
N.T.S.

STRAIGHT THRU INSTALLATION

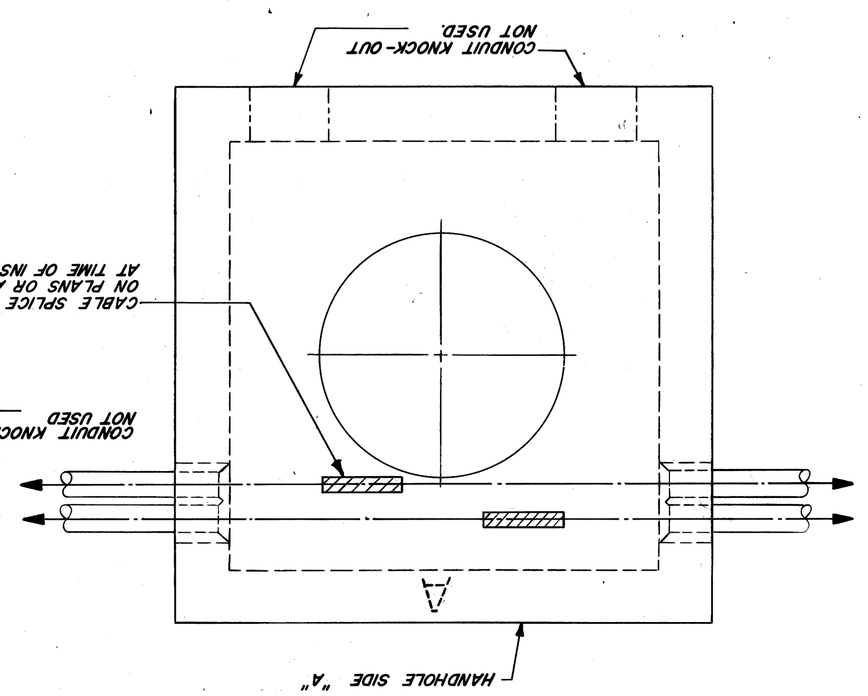

90° BEND INSTALLATION

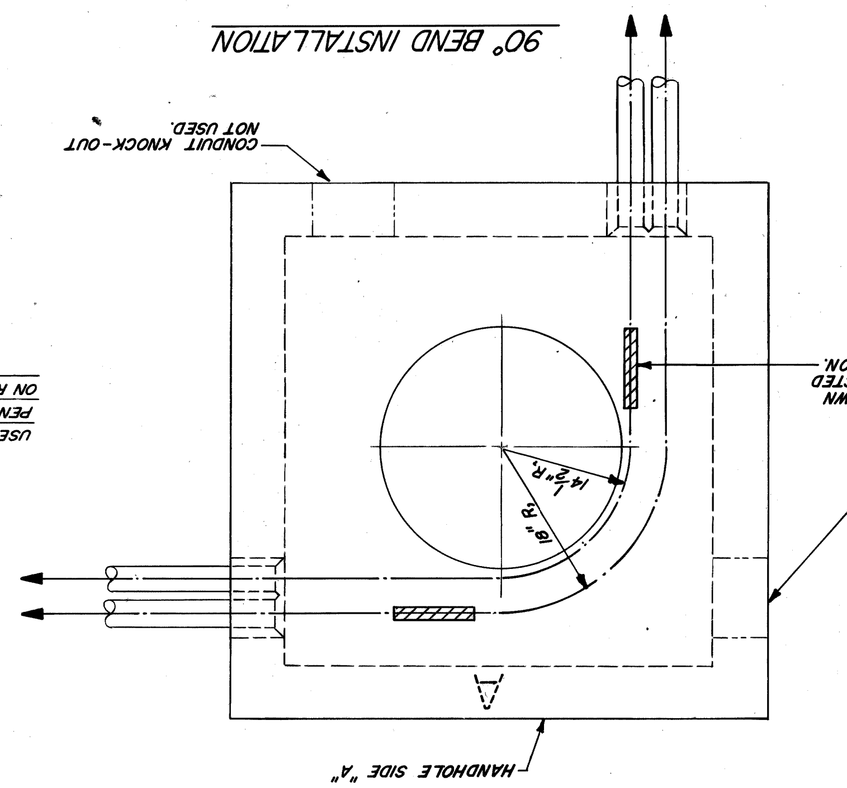

CABLE MARKING TAG (PLASTIC)
N.T.S.

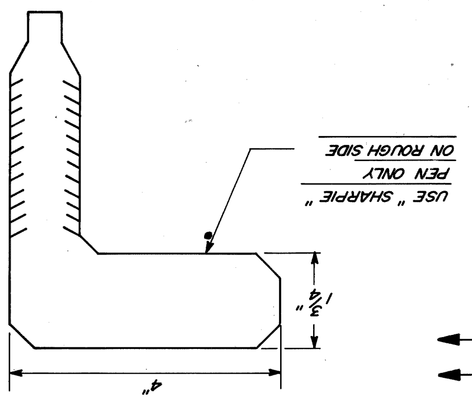

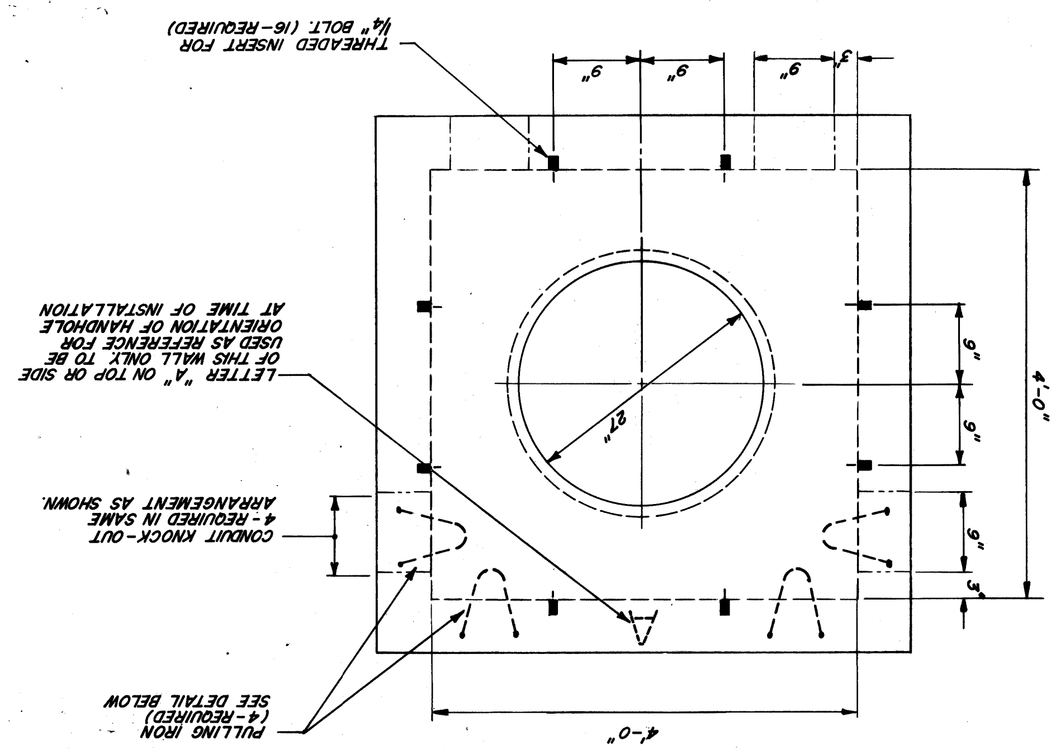

FRM FO3 2M 6-77 05084+

F.H.W.A. REG. NO.	STATE	FEDERAL PROJECT	R.O.W. NO.	SHEET NO.	TOTAL SHEETS
5	MICH.				
ROUTE	COUNTY	CONTROL SECTION		JOB NO.	

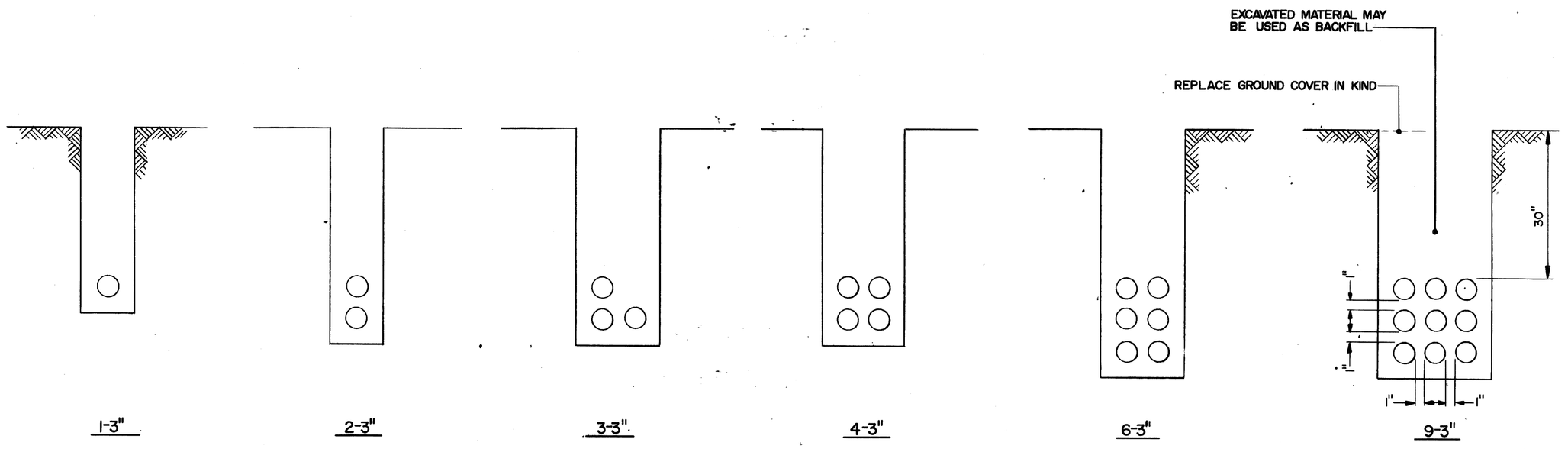

DIRECT BURIAL CONDUIT

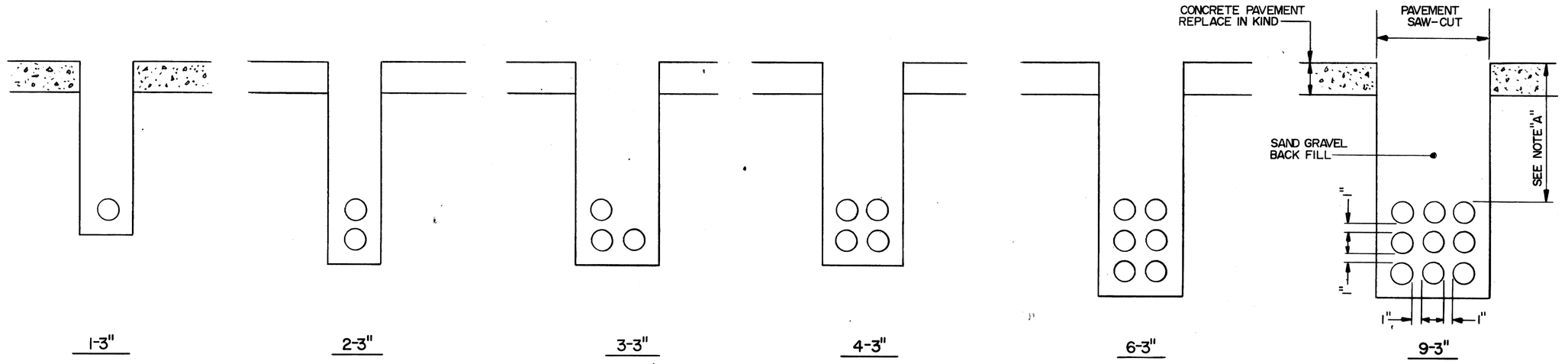

CONDUIT UNDER PAVEMENT (CONCRETE)

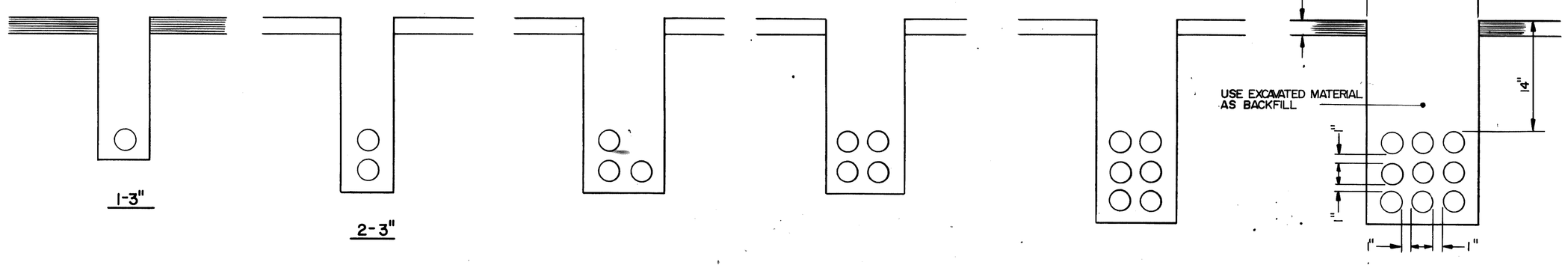

CONDUIT UNDER PAVEMENT (BITUMINOUS)

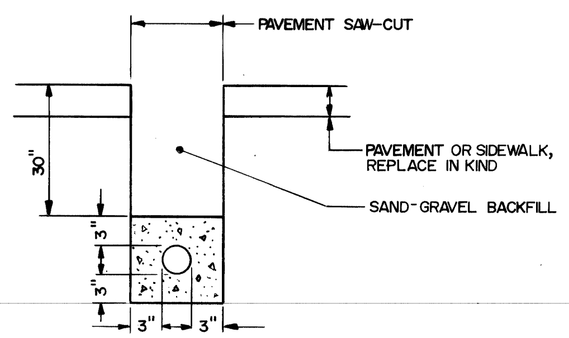

1-3" CONDUIT UNDER PAVEMENT

CONCRETE ENCASED, TO CONDUIT RISERS.

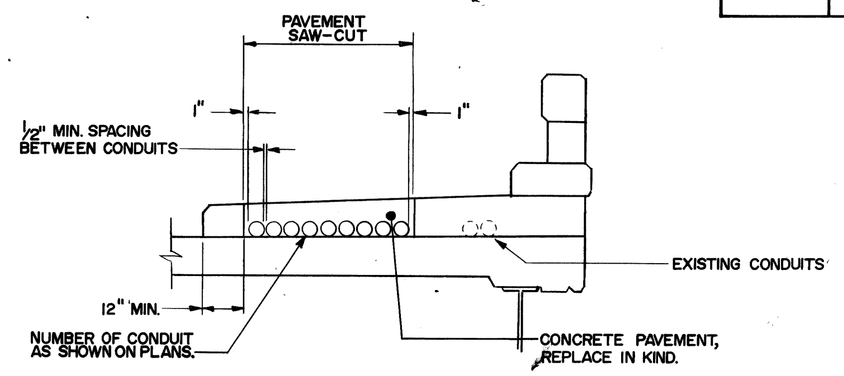

3" CONDUIT UNDER PAVEMENT (CONCRETE)

(9-3" SHOWN)

NOTE "A"

THIS DIMENSION TO BE 30" IN LOCATIONS WHERE CONDUIT EXTENDS FROM HANDHOLE TO HANDHOLE AND/OR MANHOLE. IN LOCATIONS WHERE CONDUIT UNDER PAVEMENT MEET DIRECT BURIAL CONDUITS THE ELEVATION OF CONDUITS UNDER PAVEMENT SHALL BE IN ALIGNMENT WITH THE DIRECT BURIAL CONDUITS & THERE FORE COULD BE SOMEWHAT LESS THAN 30".

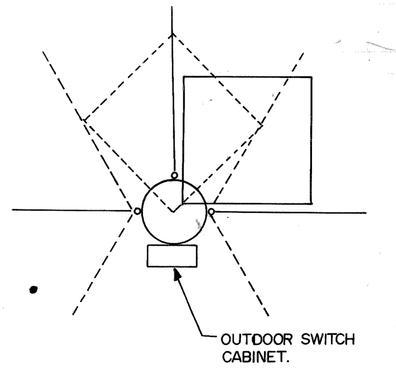

CLIMBING SPACE ON POLE

THE SIDE OF THE POLE OPPOSITE THE SWITCH CABINET & VERTICAL RUNS SHALL BE KEPT CLEAR FOR CLIMBING. THE DROP WIRES SHALL BE SO ARRANGED THAT A 30" SQUARE CLEAR OF ALL WIRES WILL BE MAINTAINED. THIS SQUARE MAY BE IN ANY OF SEVERAL POSITIONS ABOUT THE CENTER OF POLE (SEE SKETCH ABOVE.) THE D.E.CO. SERVICE MAY BE FROM ANY DIRECTION PROVIDED IT DOES NOT RUN THROUGH CLIMBING SPACE.

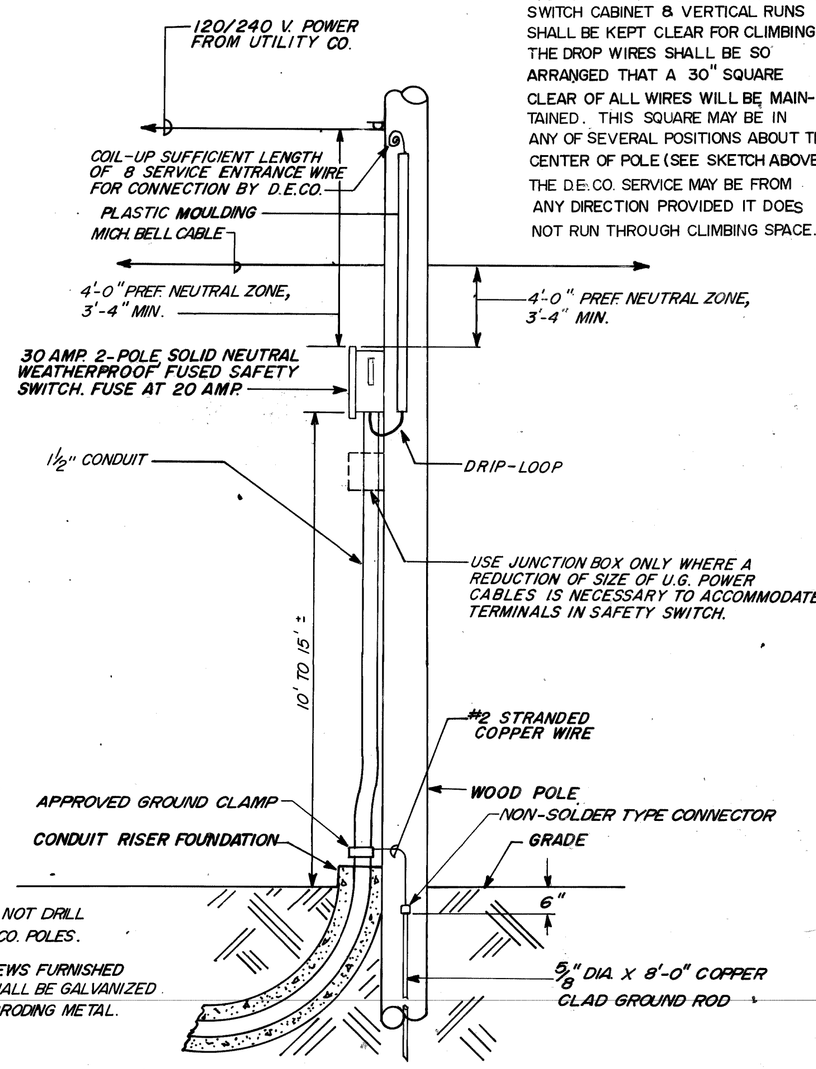

CONDUIT RISER

CHANGED DETAIL JAN-24-79

(120/240 V. POWER SERVICE)

N.T.S.

NOTES: 1. CONTRACTOR SHALL NOT DRILL ANY HOLES IN D.E.CO. POLES.

2. BOLTS, NUTS, & CREWS FURNISHED BY CONTRACTOR SHALL BE GALVANIZED STEEL OR NON-CORRODING METAL.

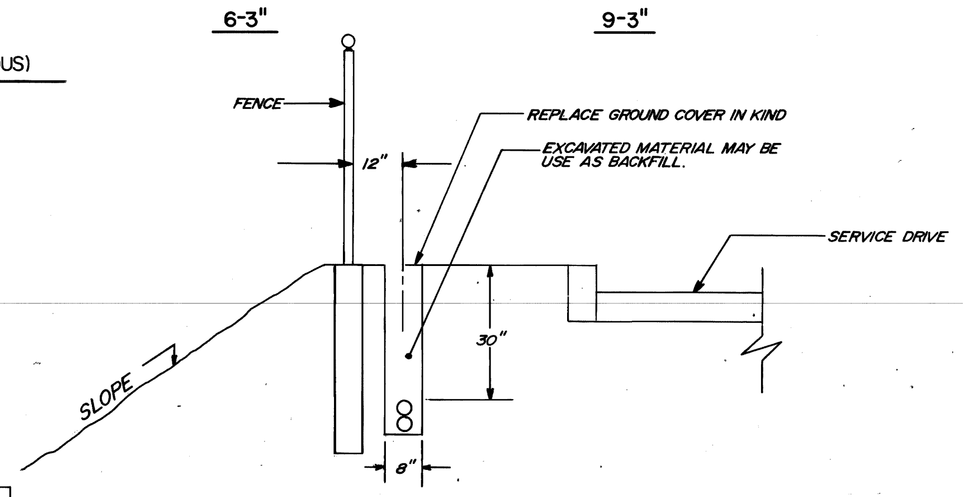

2-3" DIRECT BURIAL CONDUIT

INSTALL OUTSIDE OF FENCE WHERE DIRECTED BY THE ENGINEER.

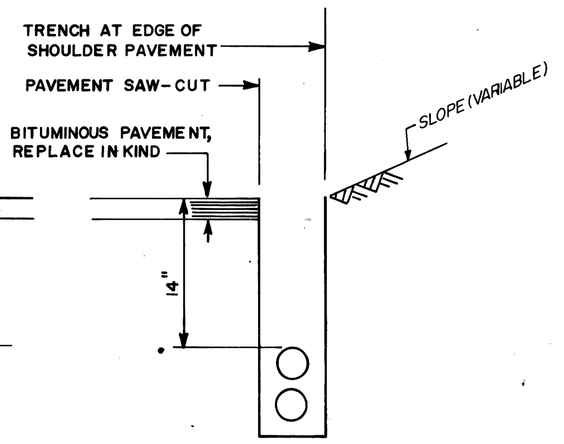

2-3" ADDED DETAIL JULY-28-78

A	ADDED 2-3" DIRECT BURIAL CONDUIT DETAIL. (OUTSIDE OF FENCE)
DRAWING REVISION LETTER	CHANGE DESCRIPTION

REVISION LETTER	A						

SPERRY SYSTEMS MANAGEMENT GREAT NECK, NEW YORK 11020

ADDED 2-3" CONDUIT, JULY-28-78 | CHANGED CONDUIT RISER, JAN-24-79

DRAWN C.E.A. | CHECKED EP | APPROVED | DATE

PLAN PREPARED BY CONSULTING ENGINEERING ASSOCIATES INC. ENGINEERING CONSULTANTS
16580 WYOMING DETROIT, MICH. 48221

DRWG NO. D-7 | SHEET NO.

MICHIGAN DEPARTMENT OF STATE HIGHWAYS AND TRANSPORTATION

DETROIT AREA FREEWAY SURVEILLANCE, CONTROL & DRIVER INFORMATION SYSTEM

CONDUIT DETAILS

CONTROL SECTION	JOB NO. 15031A	FEDERAL PROJECT	R.O.W. NO.	SHEET NO.

FHWA FOS 2M 6-77 95804+

F.H.W.A. REG. NO.	STATE	FEDERAL PROJECT	R.O.W. NO.	SHEET NO.	TOTAL SHEETS
5	MICH.				
ROUTE	COUNTY	CONTROL SECTION		JOB NO.	

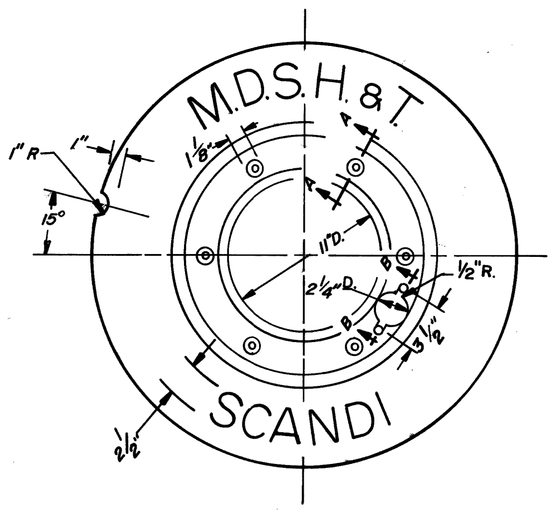

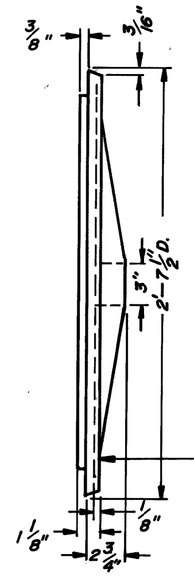

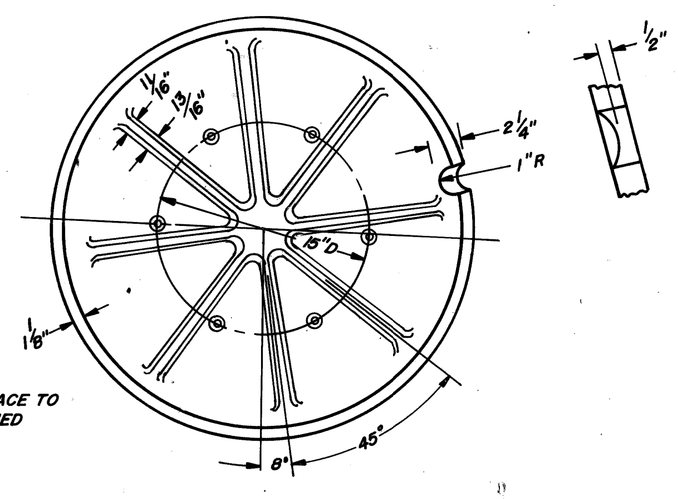

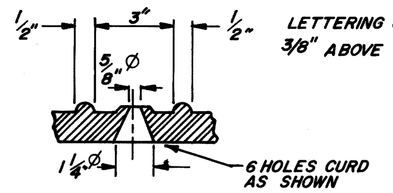

SECTION "A-A"

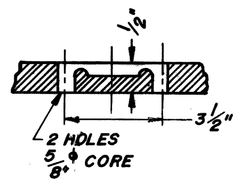

SECTION "B-B"

A.S.T.M. CLASS 30 GRAY IRON.
APPROX. WT.: 245#

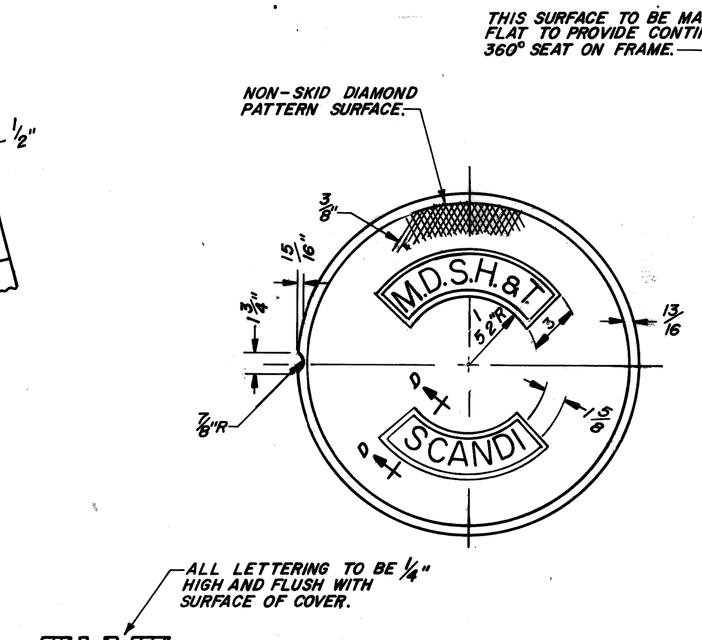

SECTION "D-D"

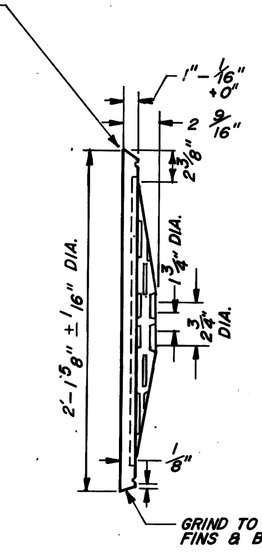

HANDHOLE COVER
N.T.S.
A.S.T.M. CLASS 30 GRAY IRON
APPROX. WT.: 145#

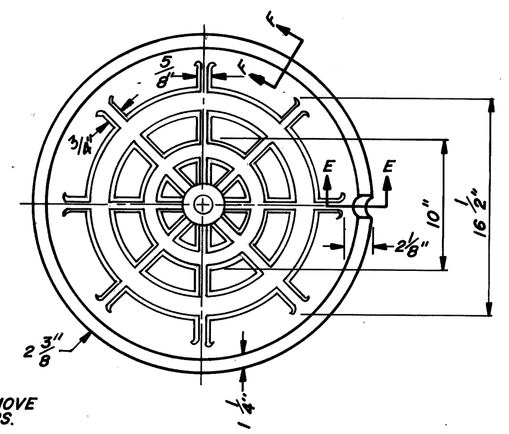

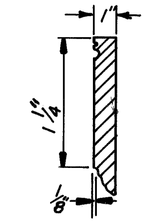

SECTION "F-F"

SECTION "E-E"

MANHOLE COVER
N.T.S.

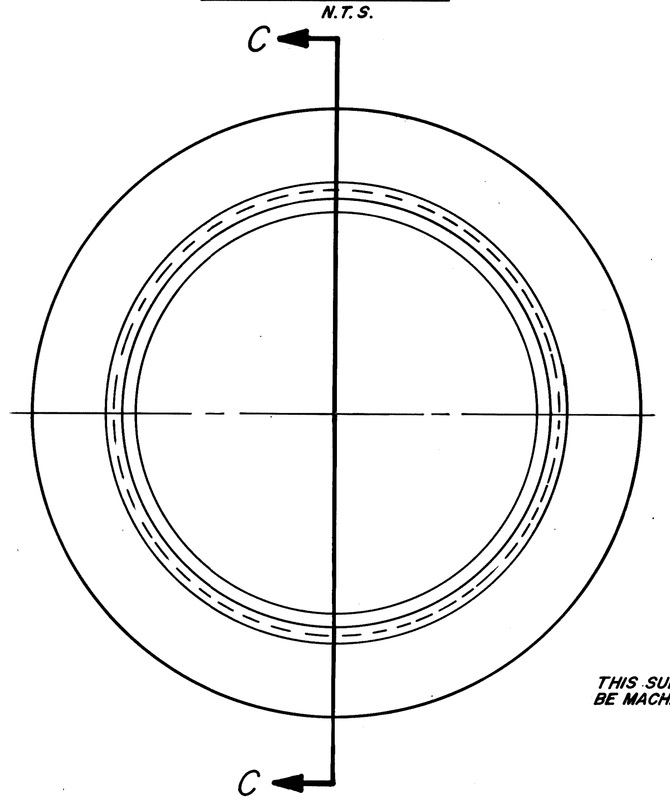

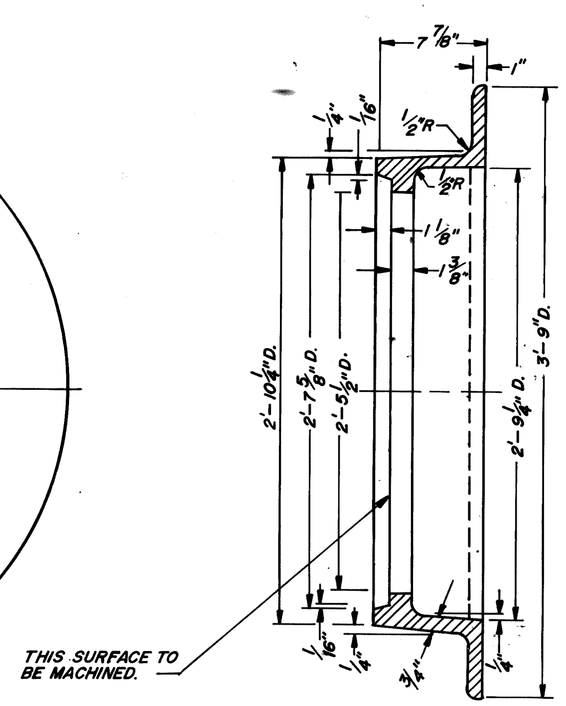

SECTION "C-C"

NOTE:

FRAMES MAY BE A.S.T.M. CLASS 30 GRAY IRON IF THE CONTRACTOR SO ELECTS.

MANHOLE FRAME
N.T.S.
A.S.T.M. CLASS 20 OR 30 GRAY IRON
APPROX. WT.: 410#

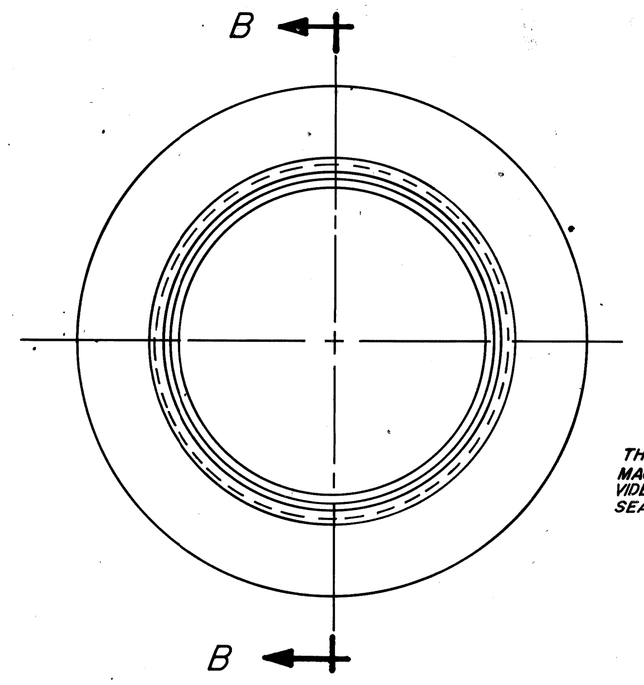

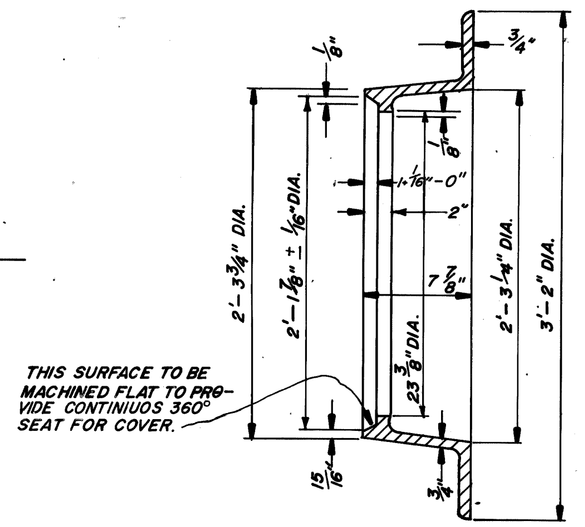

HANDHOLE FRAME
N.T.S.
A.S.T.M. CLASS 20 OR 30 GRAY IRON
APPROX. WT.: 250#

NOTE:

1. FRAMES MAY BE A.S.T.M. CLASS 30 GRAY IRON IF THE CONTRACTOR SO ELECTS.
2. ALL FILLETS ARE 1/2" RADIUS & ALL ROUND ARE 1/4" RADIUS

REVISION LETTER								

SPERRY SYSTEMS MANAGEMENT — GREAT NECK, NEW YORK 11020

DR.: WN C.E.A.
CHECKED
APPROVED
DATE

PLAN PREPARED BY
CONSULTING ENGINEERING ASSOCIATES INC.
ENGINEERING CONSULTANTS
16580 WYOMING DETROIT, MICH. 48221

DRWG. NO. D.-6 SHEET NO.

MICHIGAN DEPARTMENT OF STATE HIGHWAYS AND TRANSPORTATION

DETROIT AREA FREEWAY SURVEILLANCE, CONTROL & DRIVER INFORMATION SYSTEM

MANHOLE & HANDHOLE FRAME & COVER

CONTROL SECTION	JOB NO.	FEDERAL PROJECT	R.O.W. NO.	SHEET NO.
	15031 A			

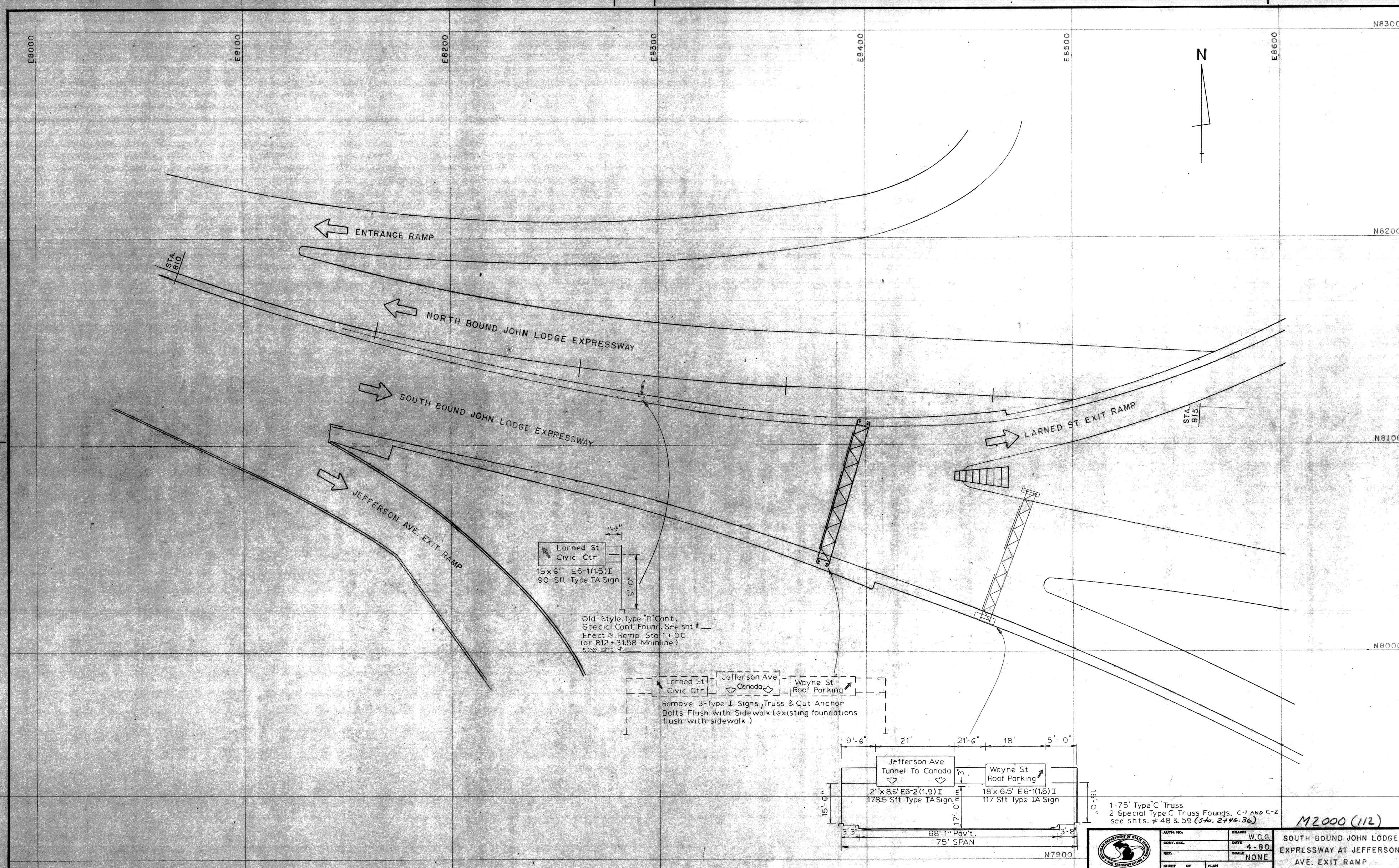

M2000 (112)

AUTH. NO.		DRAWN	W.C.G.
CONT. SEC.		DATE	4-80.
REF.		SCALE	NONE
SHEET OF	PLAN		

SOUTH BOUND JOHN LODGE EXPRESSWAY AT JEFFERSON AVE. EXIT RAMP

FORM 1395D (REV. 4-75)

EDCO 196M 4-75 60316 97

15031A LS1

GENERAL PLAN OF SITE

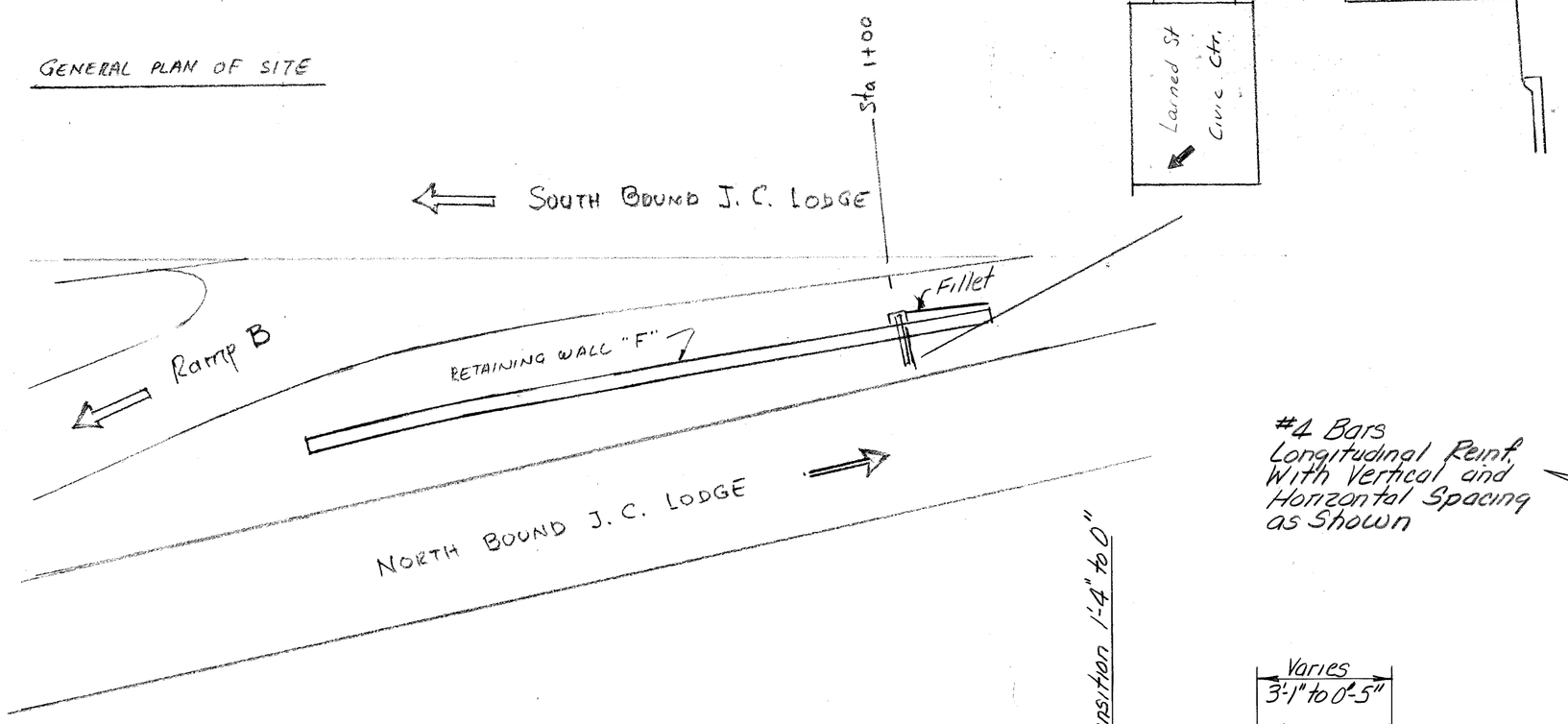

FOUNDATION DETAILS

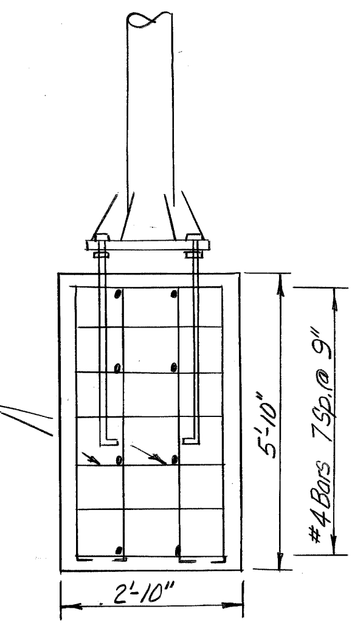

End View

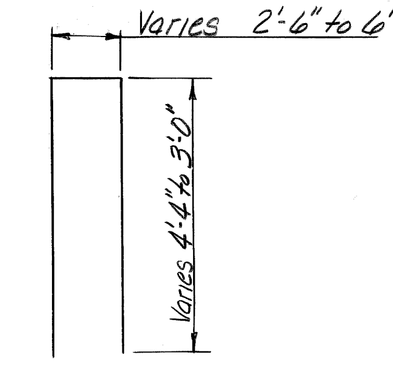

D Bar #4

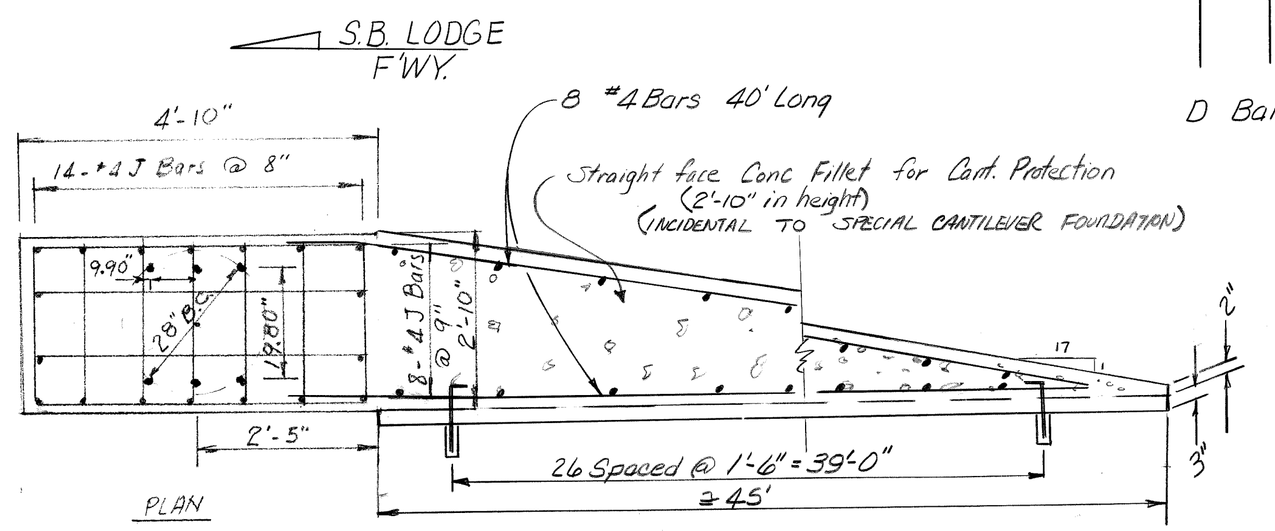

PLAN

SIGN PLACEMENT

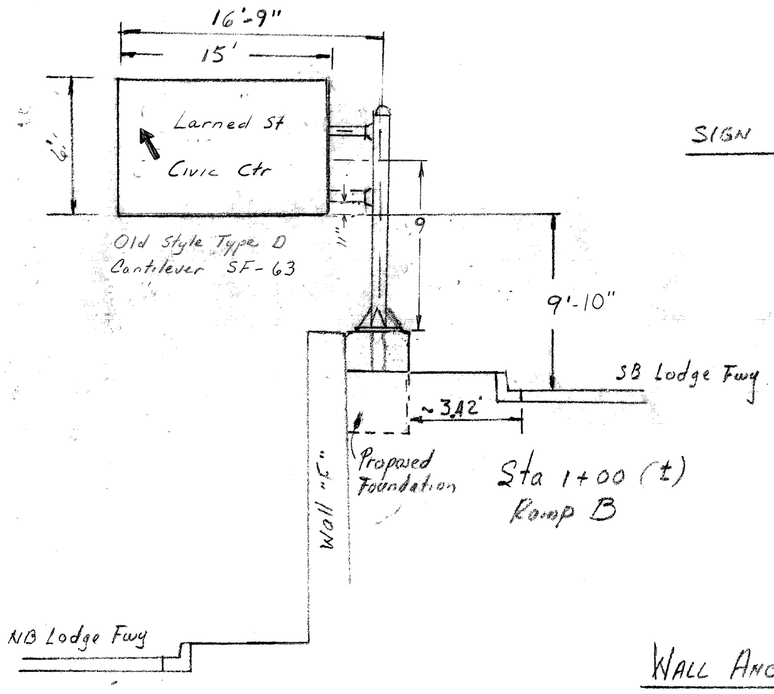

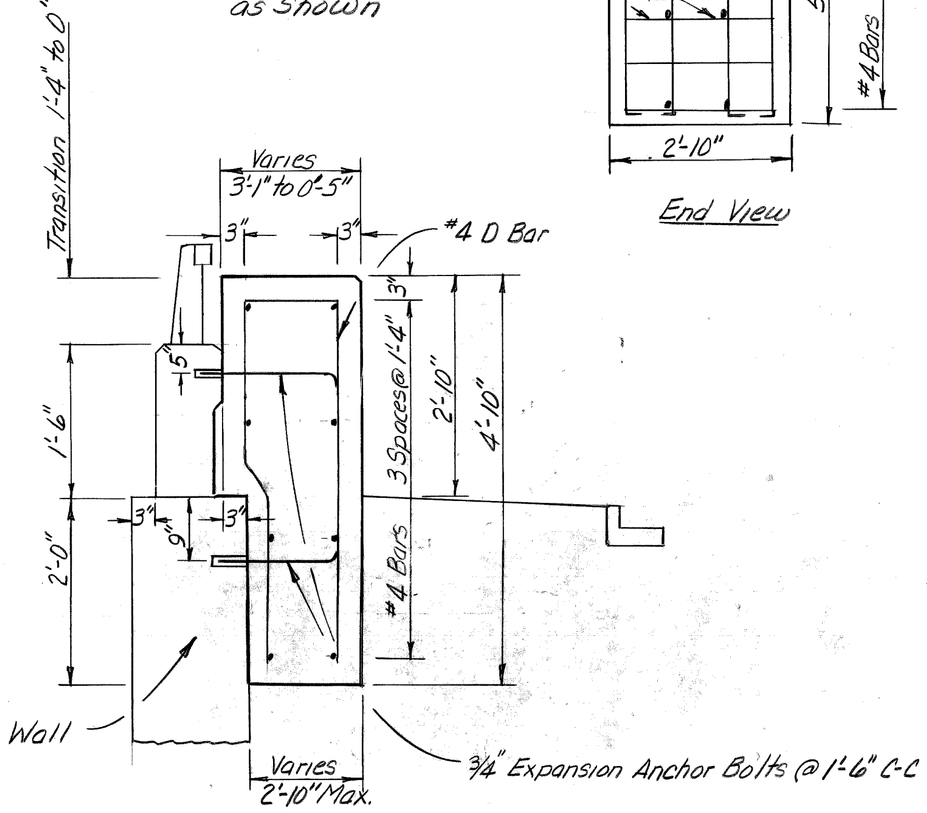

SECTION B-B

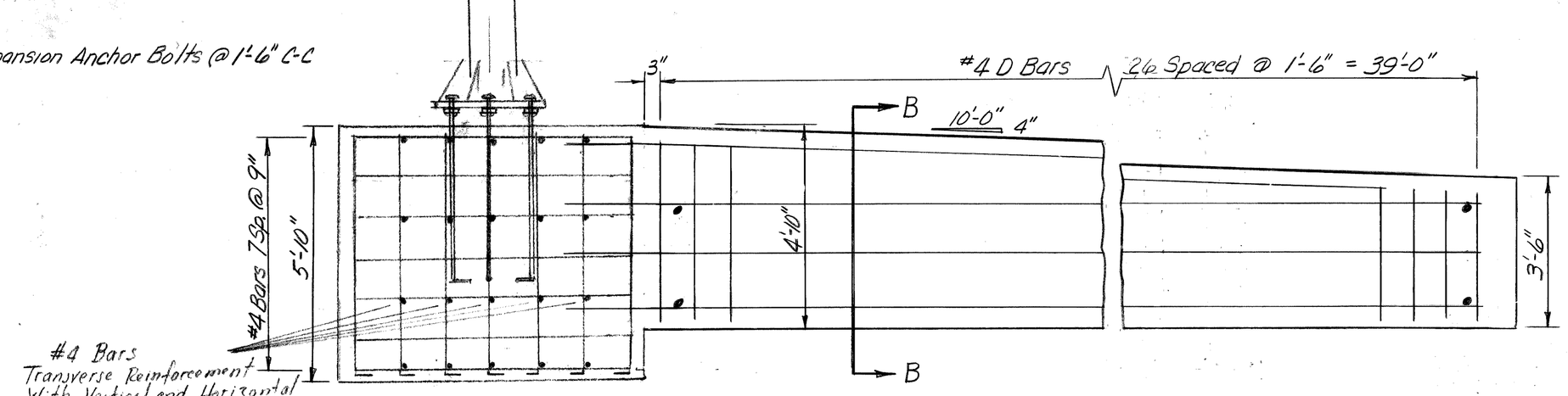

ELEVATION

WALL ANCHOR DISTRIBUTION

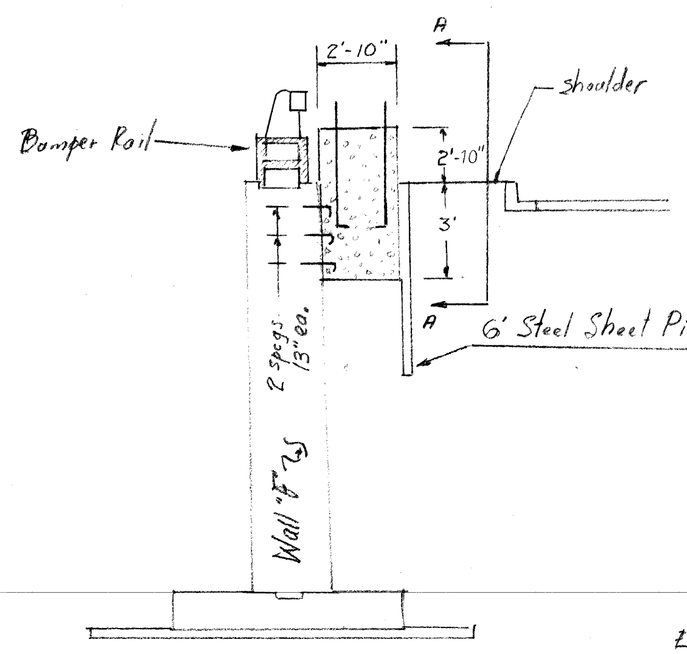

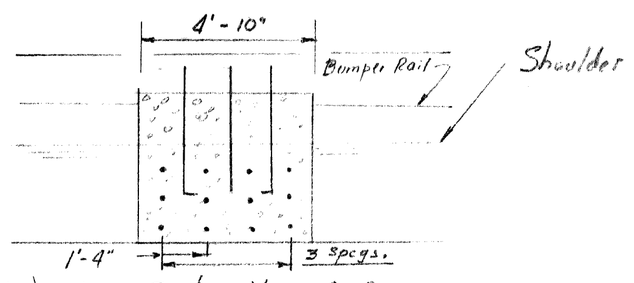

Section View A-A
(Piling Omitted For Clarity)

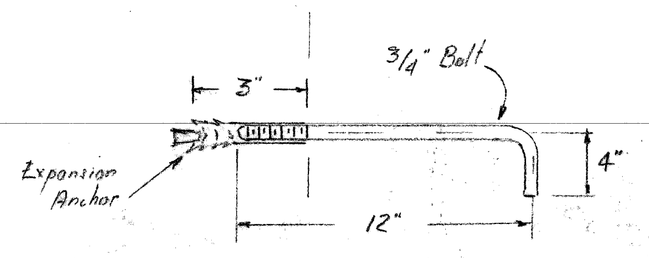

76 Anchors Required

Elevation of Fillet

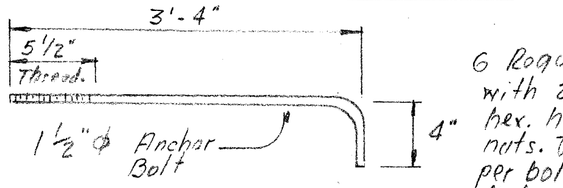

6 Required with with 2 extra heavy hex. head galvanized nuts. Washers, two per bolt, standard flat galvanized.

NOTE:

Reinforcing Steel ASTM A 615 - Grade 60
Anchor Bolts A 107 Steel, Grade 1035 with Min. Ultimate Strength of 85,000 psi.

AUTH. NO.		DRAWN	HM
CONT. SEC.		DATE	2-14-80
REF.		SCALE	NONE
SHEET 1 OF 1	PLAN		

Proposed Cantilever Foundation - Ramp B J.C. Lodge Freeway

FORM 1590D (REV. 4-79)

EDCO+ 196M 4-79 60816

15031A 81 OF 96 LS 2