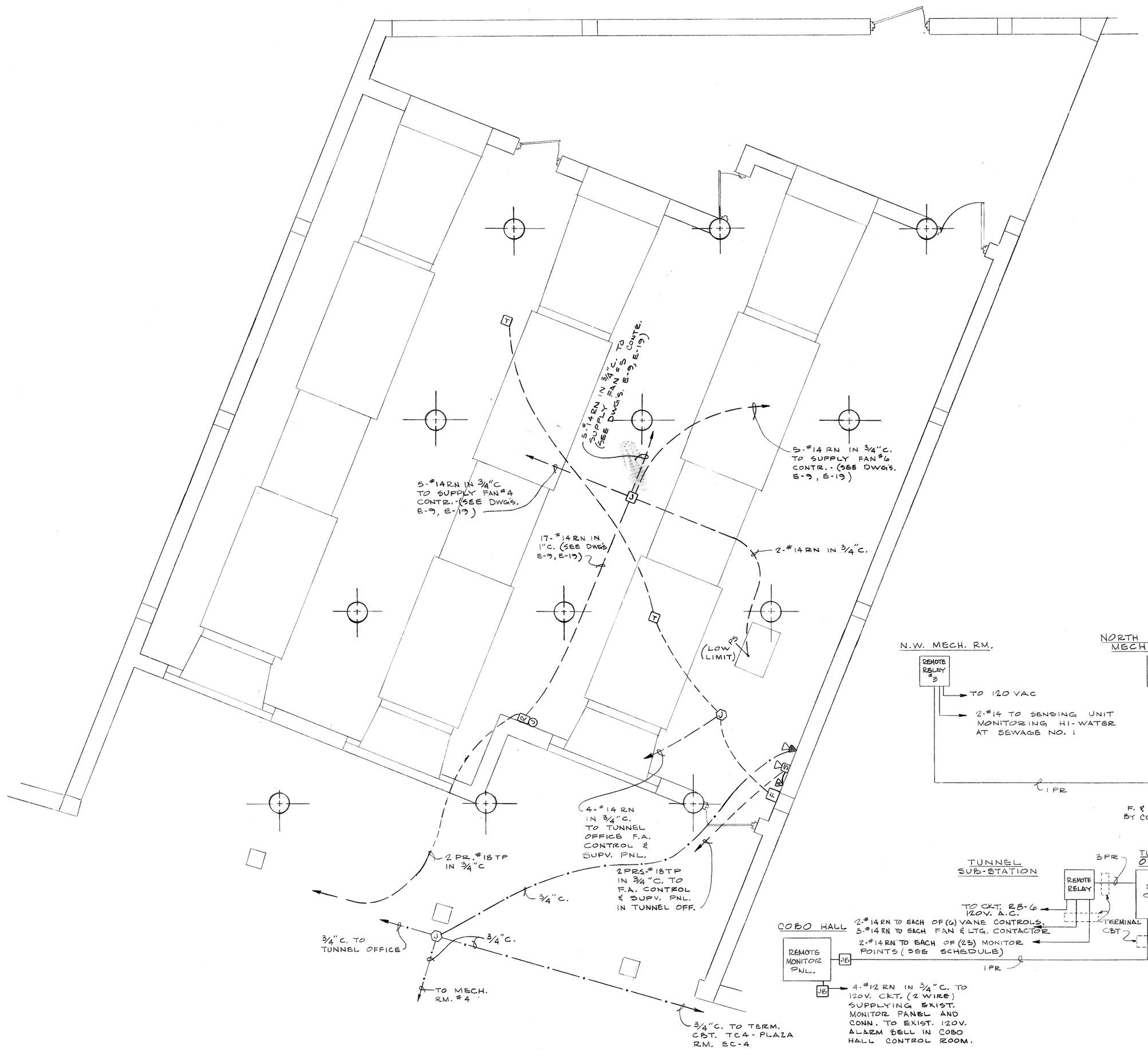

MECHANICAL ROOM Nº 1

SCALE: 1/4" = 1'-0"

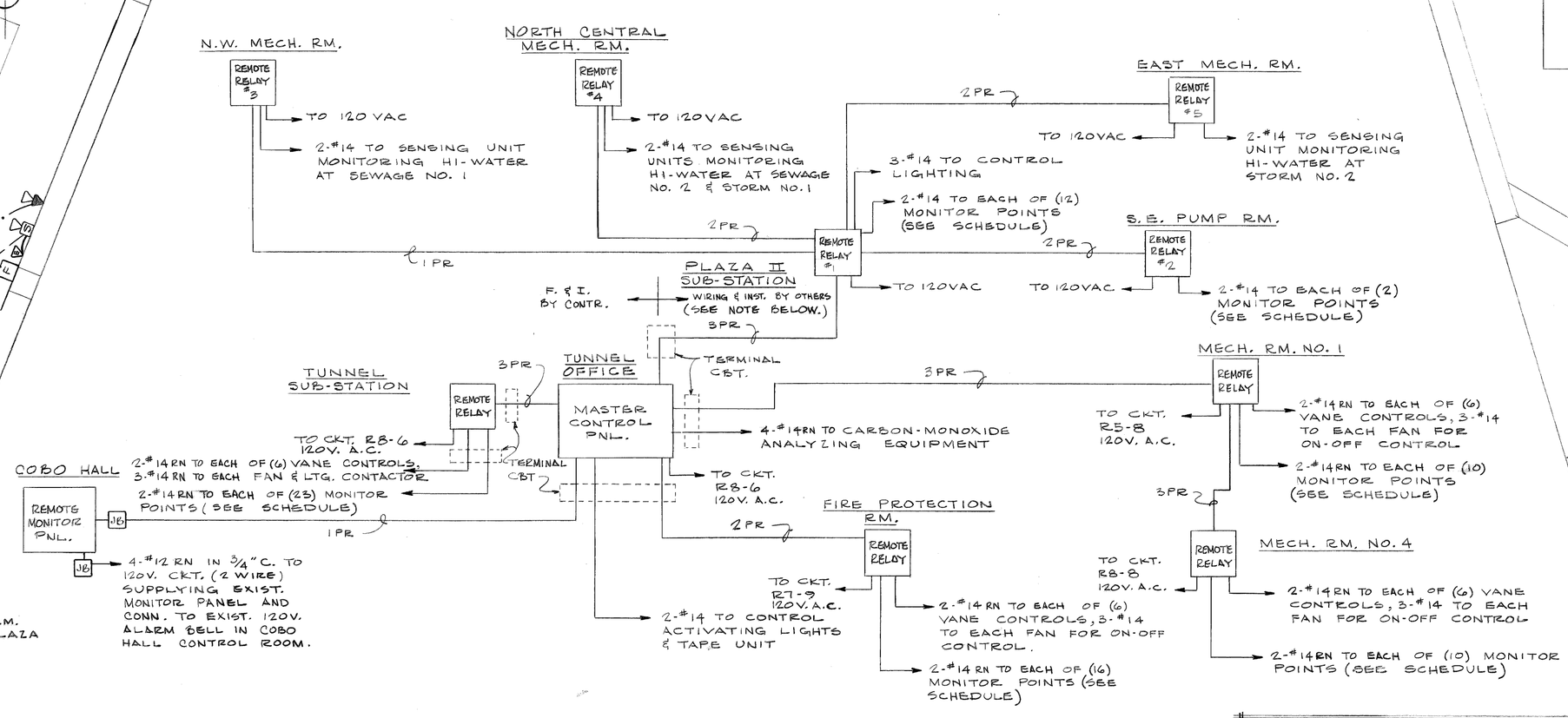

MONITORING RISER DIAGRAM

- NO SCALE -

REMOTE-RELAYS 1-5 FURNISHED UNDER THIS CONTRACT TO BE INSTALLED BY PLAZA II CONTRACTOR.

NOTE: EXACT WIRING TO SUIT EQUIPMENT FURNISHED BY CONTRACTOR.

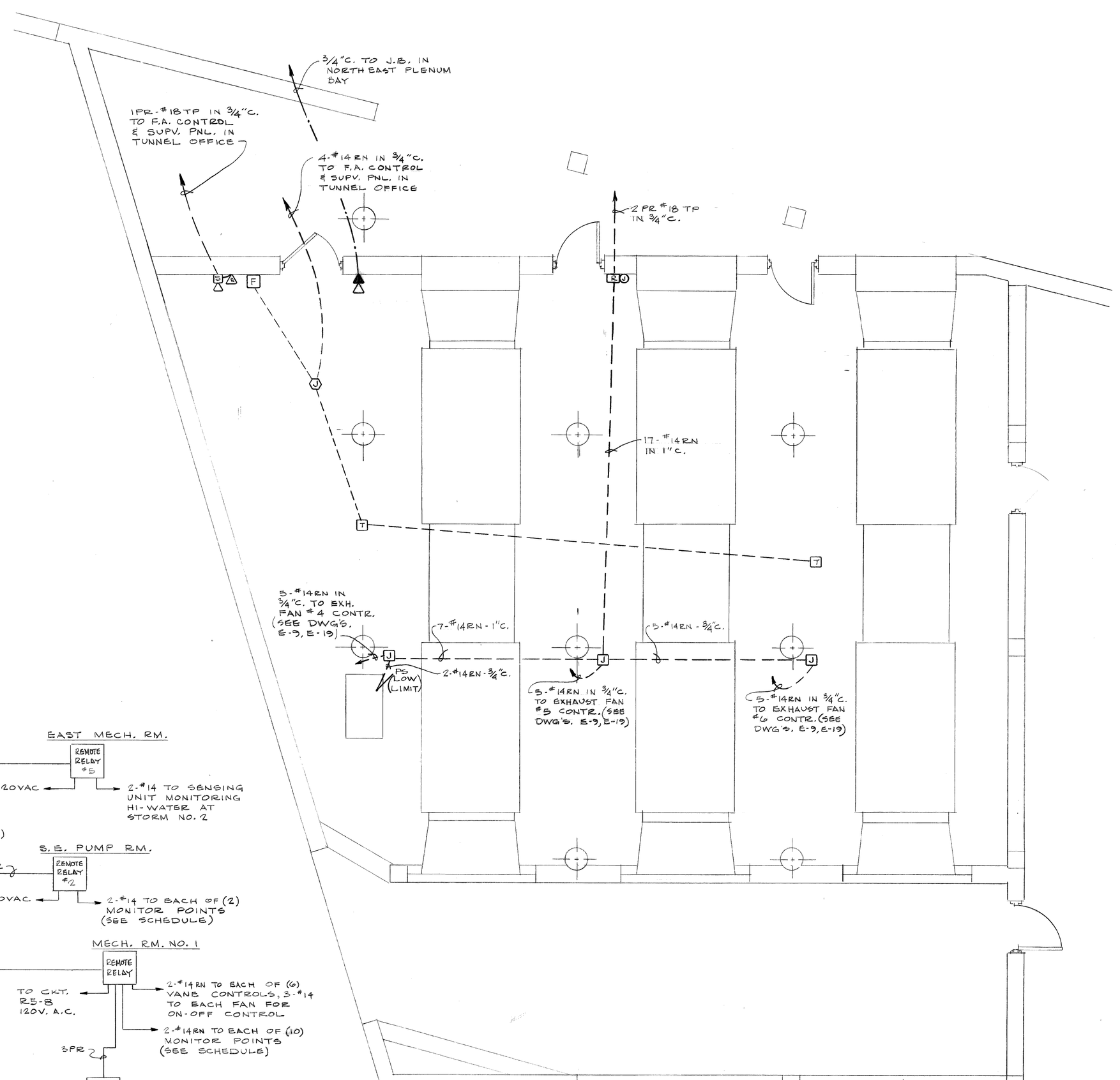

MECHANICAL ROOM Nº 4

SCALE: 1/4" = 1'-0"

revisions	date 8-11-75 designed M. BROWN drawn SIMON checked M. BROWN	approved Milton T. Brown ELECT. ENG'R.	CITY OF DETROIT CITY ENGINEERING DEPARTMENT	ATWATER STREET RELOCATION ATWATER TUNNEL MISC. AUXILIARY SYSTEM LAYOUT AND DETAILS-1 & MONITORING RISER DIAGRAM	contract no. 07105 A

sheet 61 of 81

drawing no: E-9

ALL CONDUITS MIN. 3/4" EXCEPT AS OTHERWISE NOTED - EXACT CKT. WIRING TO SUIT EQUIPMENT.

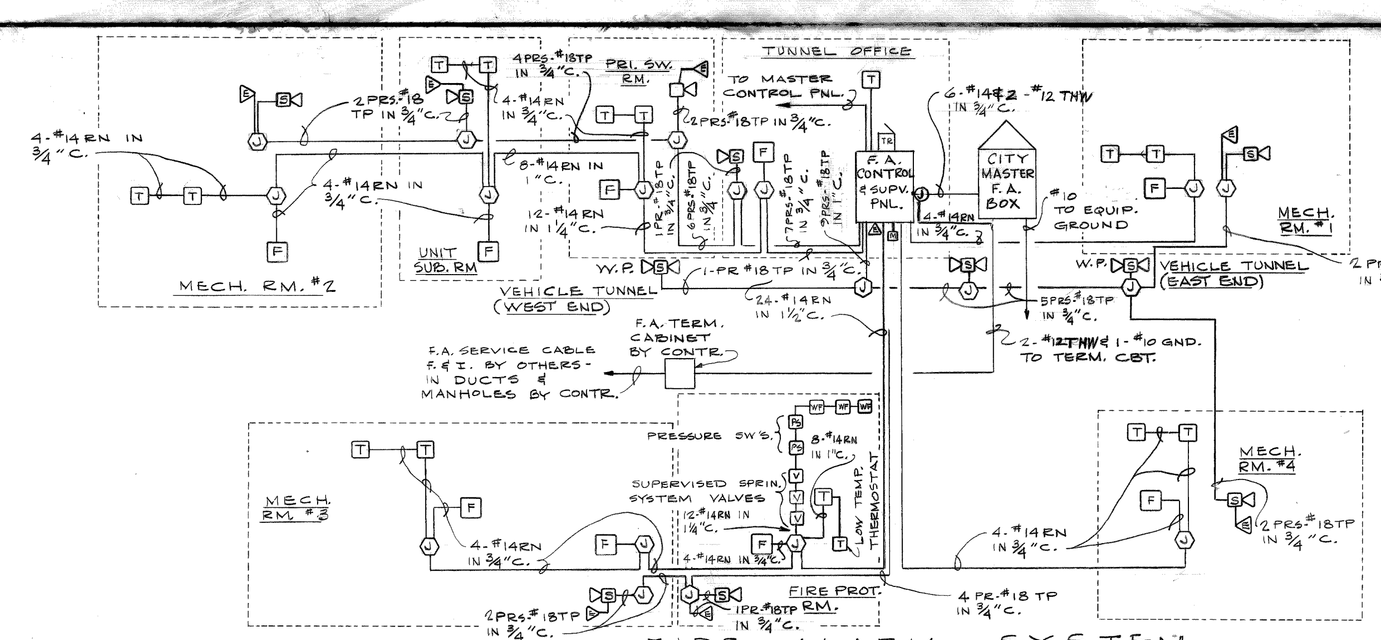

FIRE ALARM SYSTEM
RISER DIAGRAM
NO SCALE

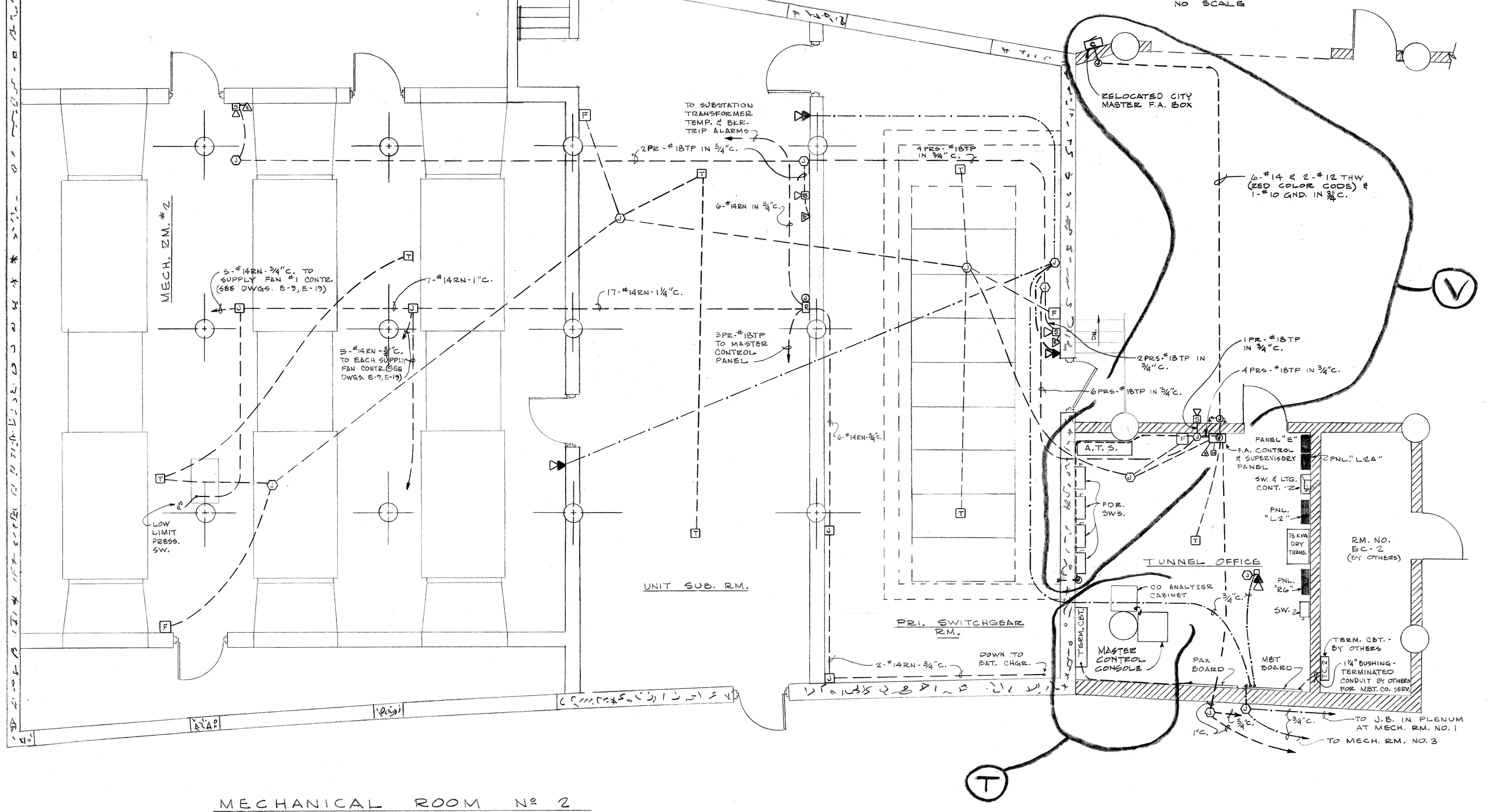

MECHANICAL ROOM Nº 2
SCALE: 1/4" = 1'-0"

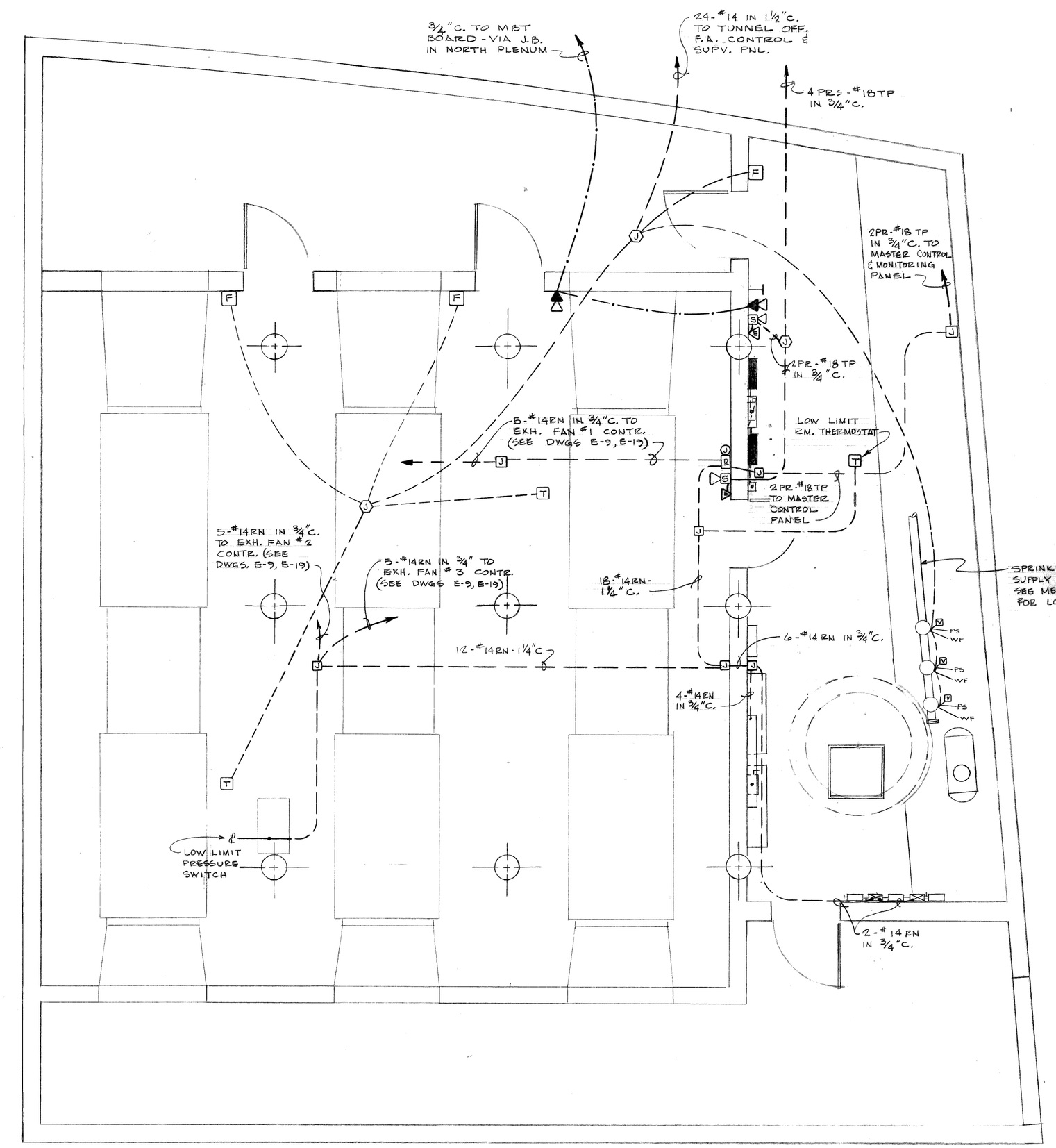

MECHANICAL ROOM Nº 3
SCALE: 1/4" = 1'-0"

revisions			
V	RELOCATED CITY MASTER F.A. BOX	CONTRACTOR	8/78
T	REVISED PER AS BUILT CONDITIONS	CONTRACTOR	8/79

date	8-11-75
designed	M. BROWN
drawn	SIMON
checked	M. BROWN

approved
Milton T. Brown
ELECT. ENG'E.

CITY OF DETROIT
CITY ENGINEERING DEPARTMENT

ATWATER STREET RELOCATION
ATWATER TUNNEL

MISC AUXILIARY SYSTEM LAYOUT AND DETAILS-2 & FIRE ALARM RISER DIAGRAM

contract no. 07105 A

sheet 62 of 81
drawing no: E-10

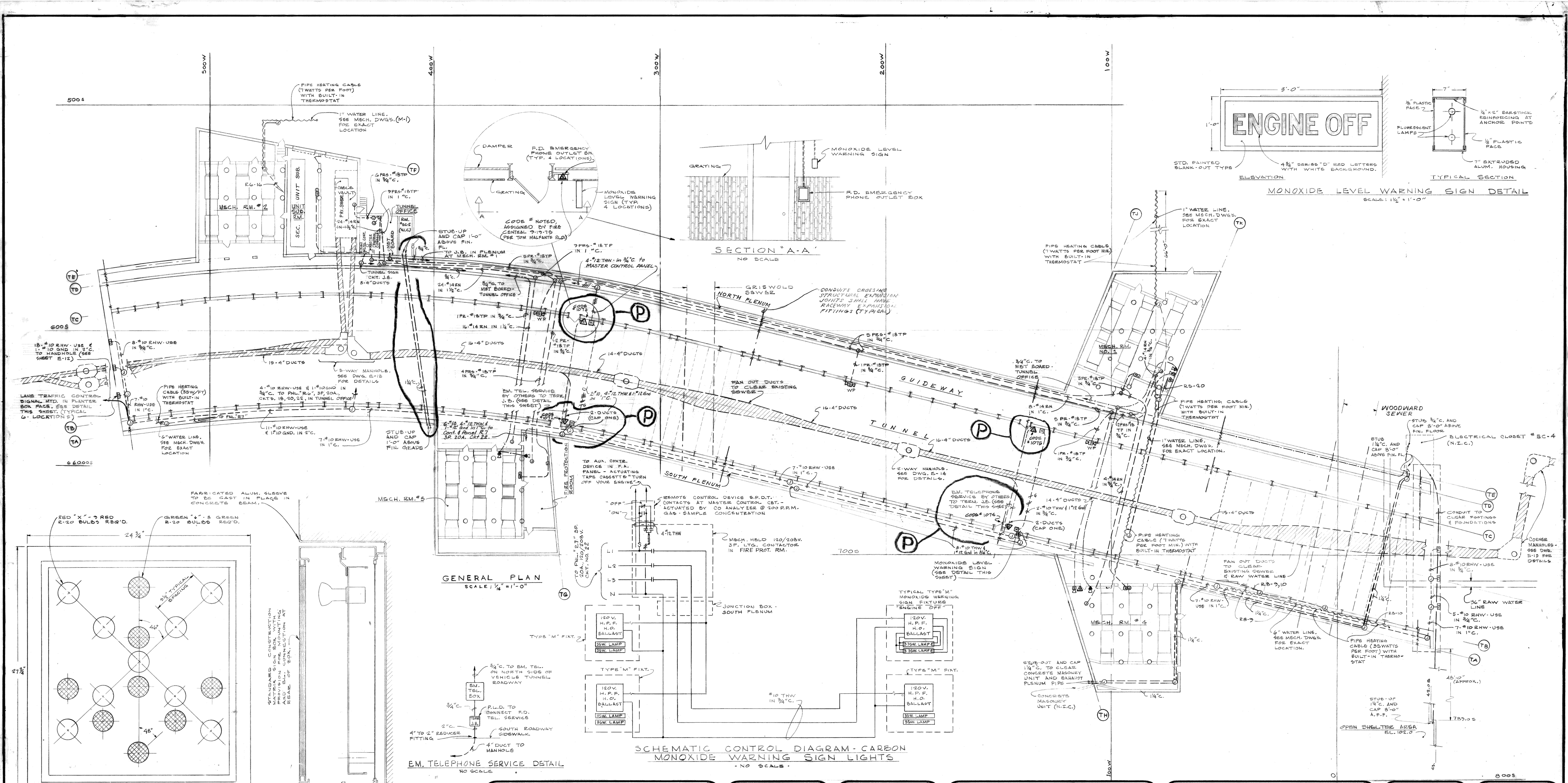

revisions	
P	CODE # NOTED. ASSIGNED BY FIRE CENTRAL 9-19-79

date	8-11-75
designed	M. BROWN
drawn	SIMON
checked	M. BROWN

approved
Milton T. Brown
ELECT. ENG'R.

CITY OF DETROIT
CITY ENGINEERING DEPARTMENT

ATWATER STREET RELOCATION
ATWATER TUNNEL
TUNNEL MISC. SYSTEMS-TRAFFIC SIGNALS & DETAILS

contract no. 07105 A

sheet 63 of 81
drawing no: E-11

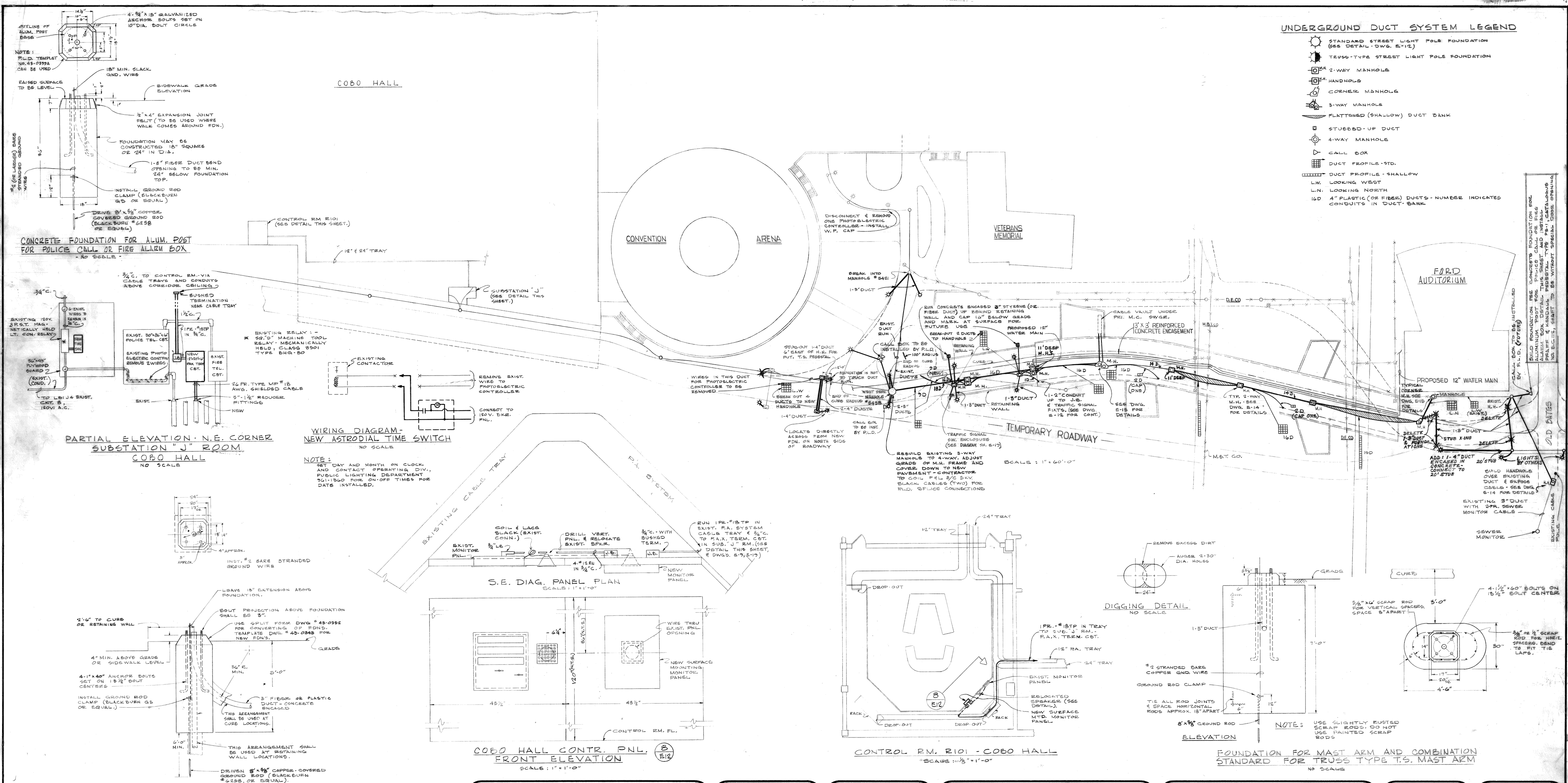

AS BUILT REV. DUCTS & POLE FOUND. PER FI.D. DWG. DATED 12-5-76	revisions	date 8-11-75	approved Milton T. Brown ELECT. ENG'R.
		designed M. BROWN	CITY OF DETROIT CITY ENGINEERING DEPARTMENT
		drawn Simon	
		checked M. BROWN	

ATWATER STREET RELOCATION
ATWATER TUNNEL

UNDERGROUND DUCT LAYOUT & MISC. DETAILS

contract no. 07105 A

sheet 64 of 81

drawing no: E-12

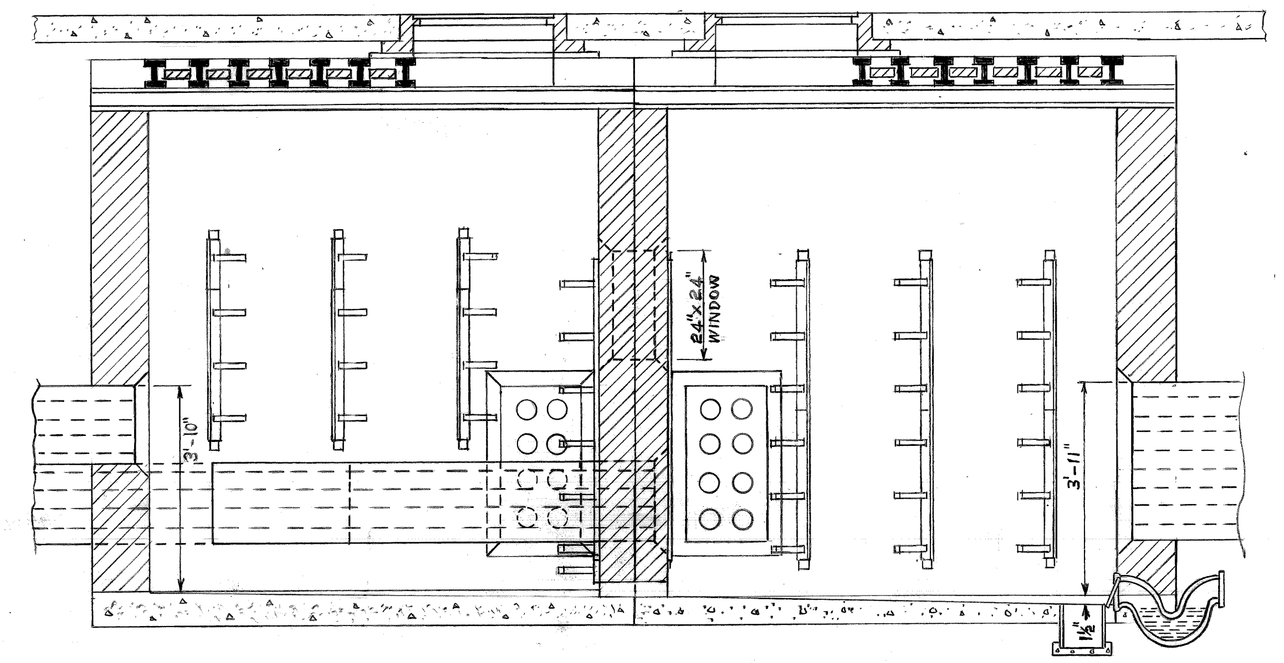

SECTION (1 / E-13)
N.T.S.

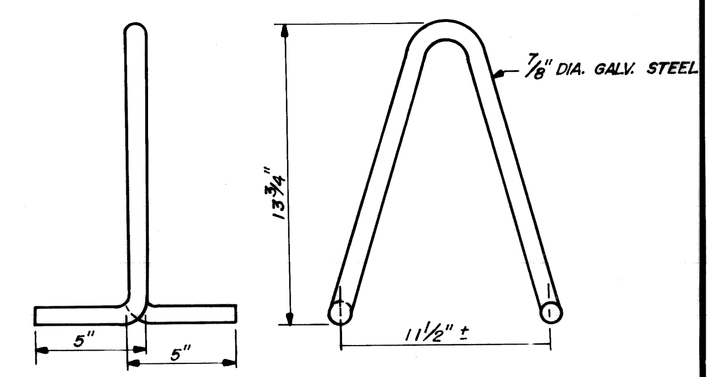

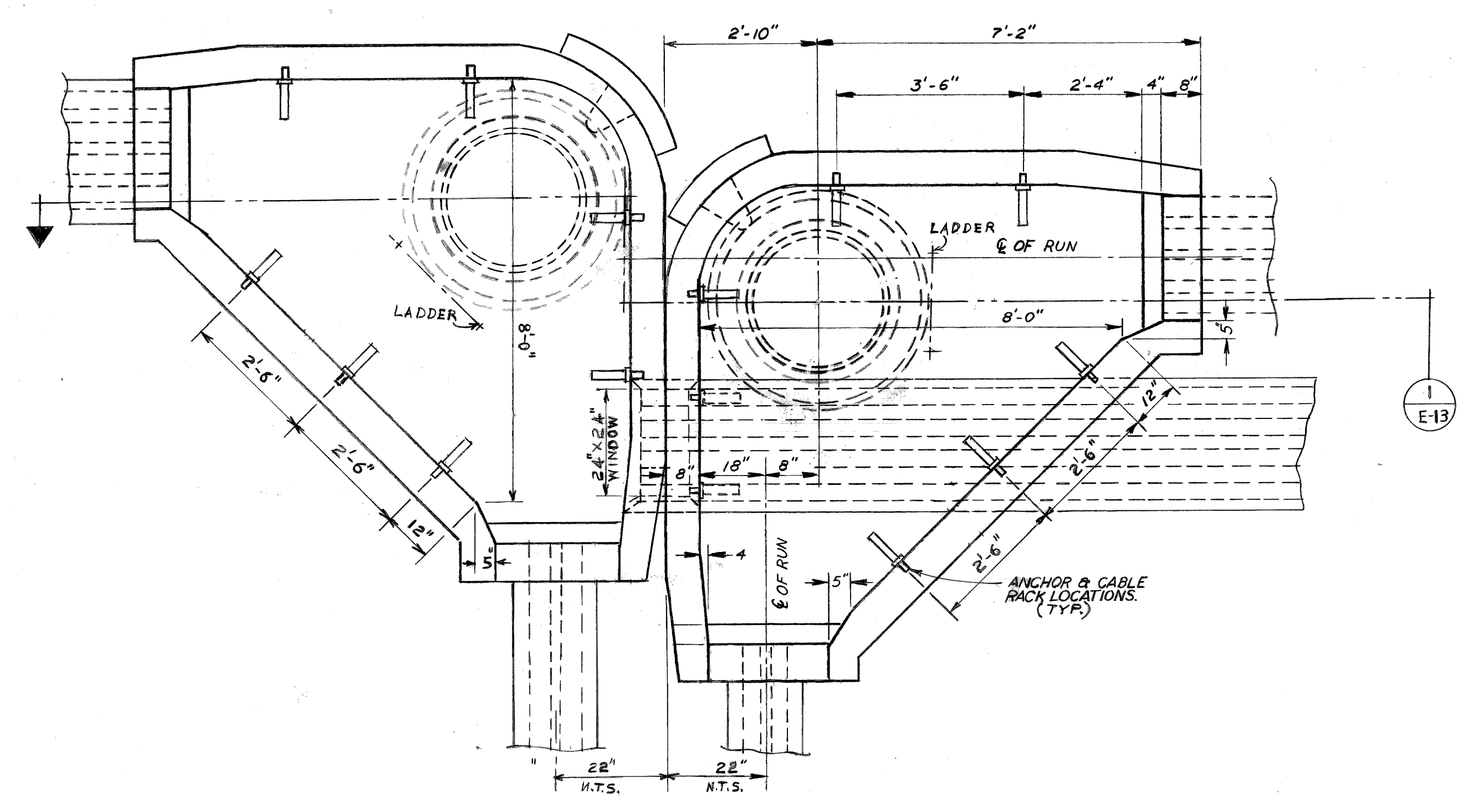

PLAN
N.T.S.

NOTES:

1. THIS DIMENSION NORMALLY 6'-0". SEE SPECIFICATIONS FOR UNUSUAL CONDITIONS.
2. WHERE M.H.'S ARE LOCATED BACK OF CURBS, M.H. ROOF MUST BE BUILT 18" BELOW CURB GRADE TO PROVIDE FOR FUTURE PAVEMENT.
3. IN EXISTING PAVEMENT, PROVIDE AT LEAST 3" BETWEEN ROOF AND BASE OF PAVEMENT.
4. BOLTS, RACKS & PULLING IRONS TO BE HOT-DIP GALV.
5. ℄ OF RAILS UNDER M.H. FRAME FLANGE TO BE APPROX. 18" FROM ℄'S OF FRAME.
6. M.H. NUMBER TO BE INSTALLED ON MANHOLE WALL IN CONSPICUOUS PLACE.
7. MOUNTING HEIGHT FOR LOWER BOLTS OF CABLE RACK SHALL BE THE AVERAGE HEIGHT OF THE BOTTOM OF LOWEST DUCTS IN MAIN CONDUITS, INSTALL RACKS ON ALL WALLS.
8. 8" THICK BRICK CHIMNEYS WHERE SPECIFIED SHALL BE INCIDENTAL TO APPLICABLE M.H. ITEM.
9. EXCAVATION LIMITS FOR PUBLIC LIGHTING COMMISSION MANHOLES SHALL BE ON VERTICAL PLANES ON THE FOOTING OUTLINE.
10. SEE DWG. NO. E-15 FOR REINFORCING AND FURTHER DETAILS.
11. SEE DWG. E-14 FOR LADDER DETAILS.

revisions	date 8-11-75 designed P. L.D. drawn SIMON checked M. BROWN	approved Milton T. Brown ELECT. ENG'R.	CITY OF DETROIT CITY ENGINEERING DEPARTMENT	ATWATER STREET RELOCATION ATWATER TUNNEL 3 WAY MANHOLE DETAILS	contract no. 07105A

sheet 65 of 81
drawing no: E-13

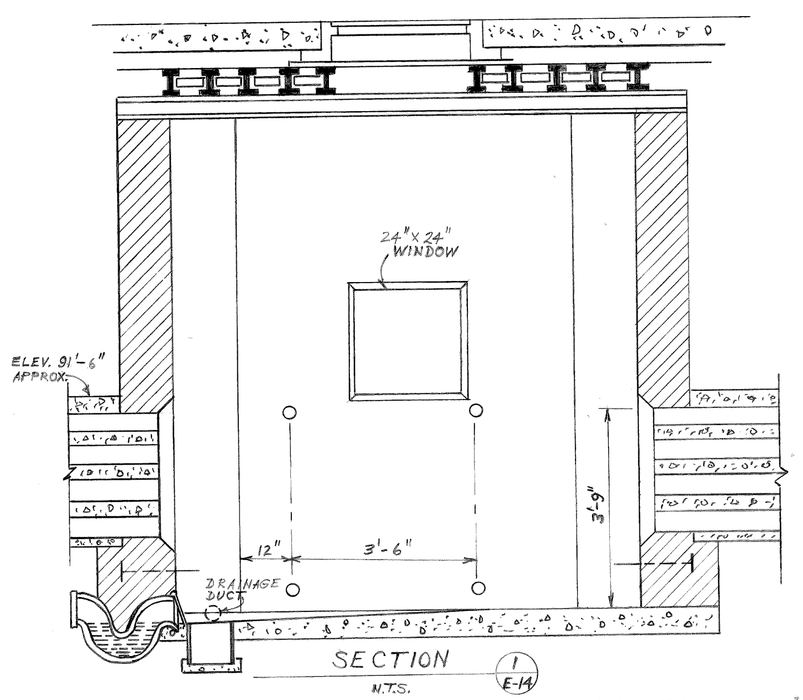

SECTION (1 / E-14)
N.T.S.

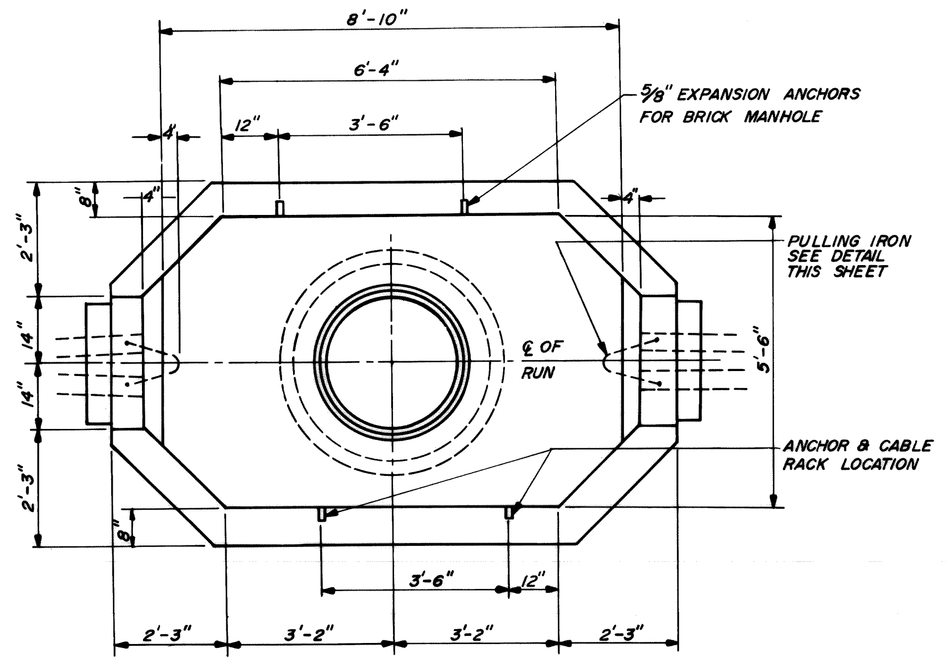

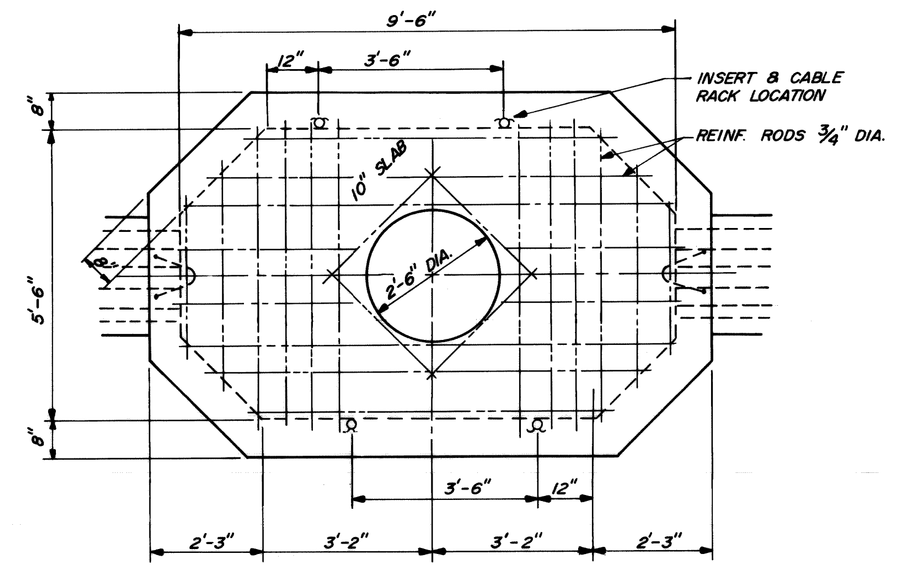

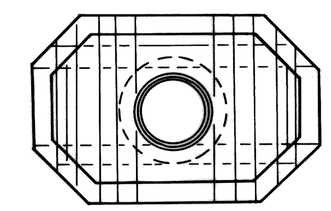

60 LB. "T" RAILS

2 PIECES	4'-6" LONG
2 PIECES	6'-0" LONG
6 PIECES	6'-10" LONG
2 PIECES	9'-3" LONG
2 PIECES	10'-8" LONG
TOTAL WEIGHT 2040 LB.	

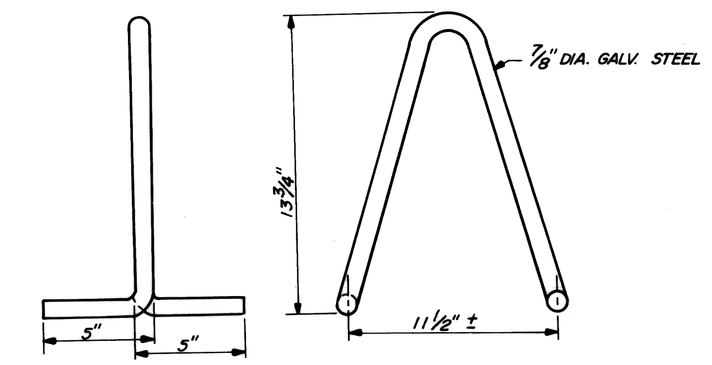

PULLING IRON
N.T.S.

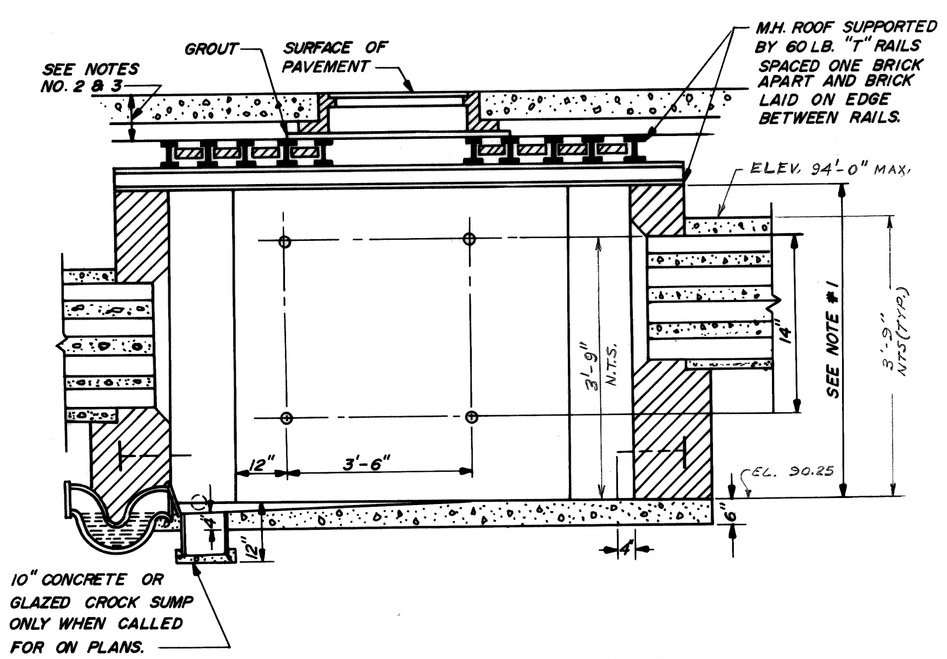

BRICK - TWO WAY MANHOLE
N.T.S.

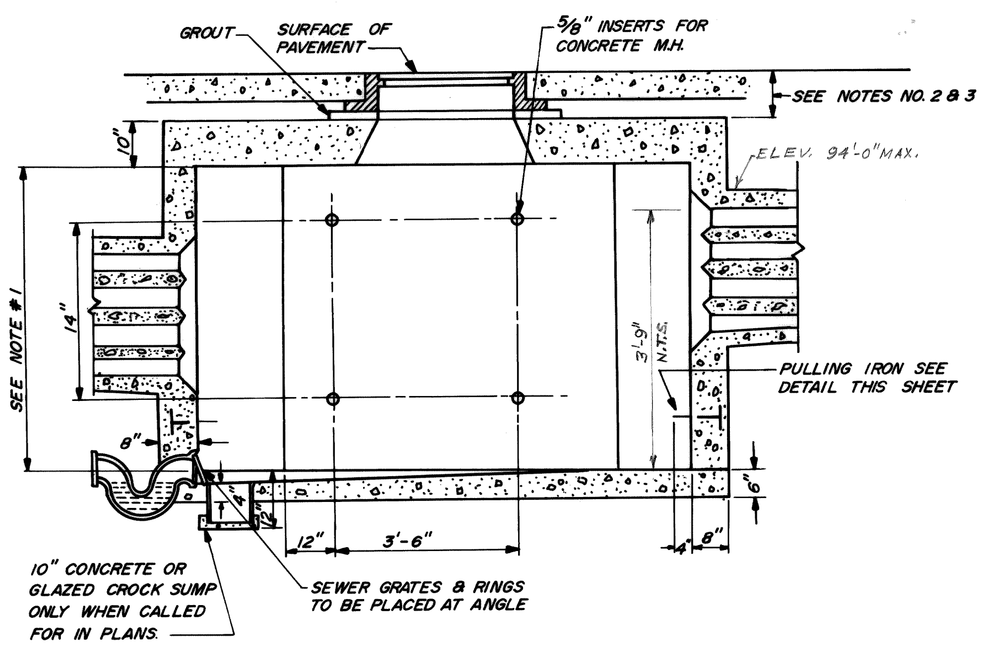

CONCRETE - TWO WAY MANHOLE
N.T.S.

3/4" DIA. REINFORCING STEEL RODS REQ'D. FOR 2-WAY M.H.

10 PIECES	3'-6" LONG
2 PIECES	5'-0" LONG
8 PIECES	6'-6" LONG
2 PIECES	8'-0" LONG
4 PIECES	10'-0" LONG

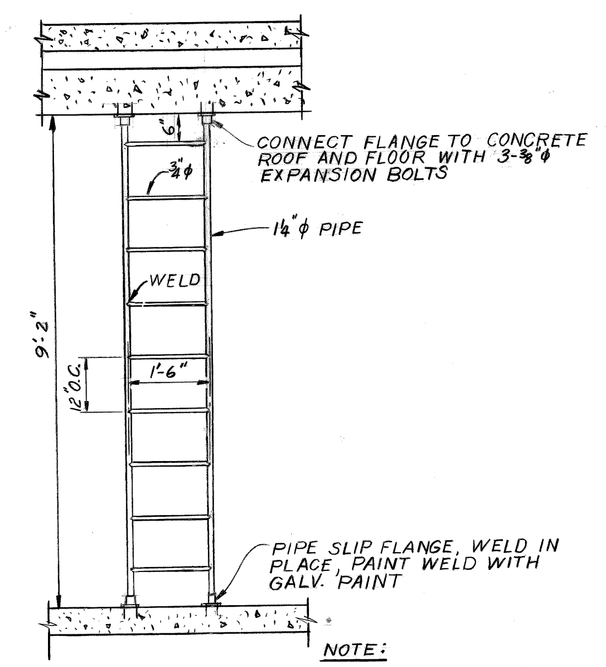

NOTE:
ALL LADDER MEMBERS SHALL BE GALV. ASTM A123

MANHOLE LADDER
N.T.S.

NOTES:

1. THIS DIMENSION NORMALLY 6'-6". SEE SPECIFICATIONS FOR UNUSUAL CONDITIONS.
2. WHERE M.H.'S ARE LOCATED BACK OF CURBS, M.H. ROOF MUST BE BUILT 18" BELOW CURB GRADE TO PROVIDE FOR FUTURE PAVEMENT.
3. IN EXISTING PAVEMENT, PROVIDE AT LEAST 3" BETWEEN ROOF AND BASE OF PAVEMENT.
4. BOLTS, RACKS & PULLING IRONS TO BE HOT-DIP GALV.
5. ℄ OF RAILS UNDER M.H. FRAME FLANGE TO BE APPROX. 18" FROM ℄'S OF FRAME.
6. M.H. NUMBER TO BE INSTALLED ON MANHOLE WALL IN CONSPICUOUS PLACE.
7. MOUNTING HEIGHT FOR LOWER BOLTS OF CABLE RACK SHALL BE THE AVERAGE HEIGHT OF THE BOTTOM OF LOWEST DUCTS IN MAIN CONDUITS, INSTALL RACKS ON ALL WALLS.
8. 8" THICK BRICK CHIMNEYS WHERE SPECIFIED SHALL BE INCIDENTAL TO APPLICABLE M.H. ITEM.
9. EXCAVATION LIMITS FOR PUBLIC LIGHTING COMMISSION MANHOLES SHALL BE ON VERTICAL PLANES ON THE FOOTING OUTLINE.

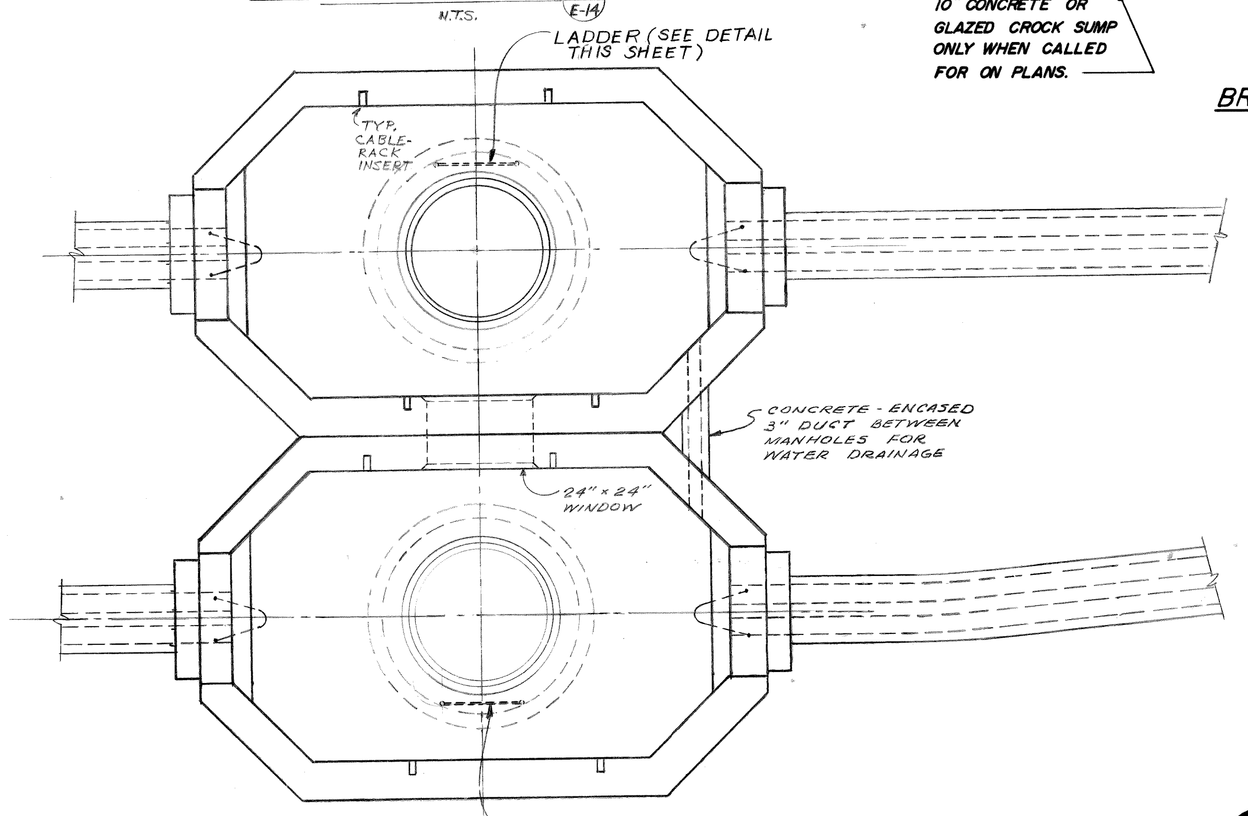

PLAN - DEEP DOUBLE 2-WAY M.H.
(DEEP SINGLE M.H. SIMILAR. SEE OTHER DETAILS FOR SIMILAR STD. MANHOLES, THIS SHEET)
N.T.S.

revisions	date 8-11-75 designed M. BROWN drawn SIMON checked M. BROWN	approved Milton T. Brown ELECT. ENG'R.	CITY OF DETROIT CITY ENGINEERING DEPARTMENT	ATWATER STREET RELOCATION ATWATER TUNNEL 2 WAY MANHOLE DETAILS	contract no. 07105A	sheet 64 of 81 drawing no: E-14

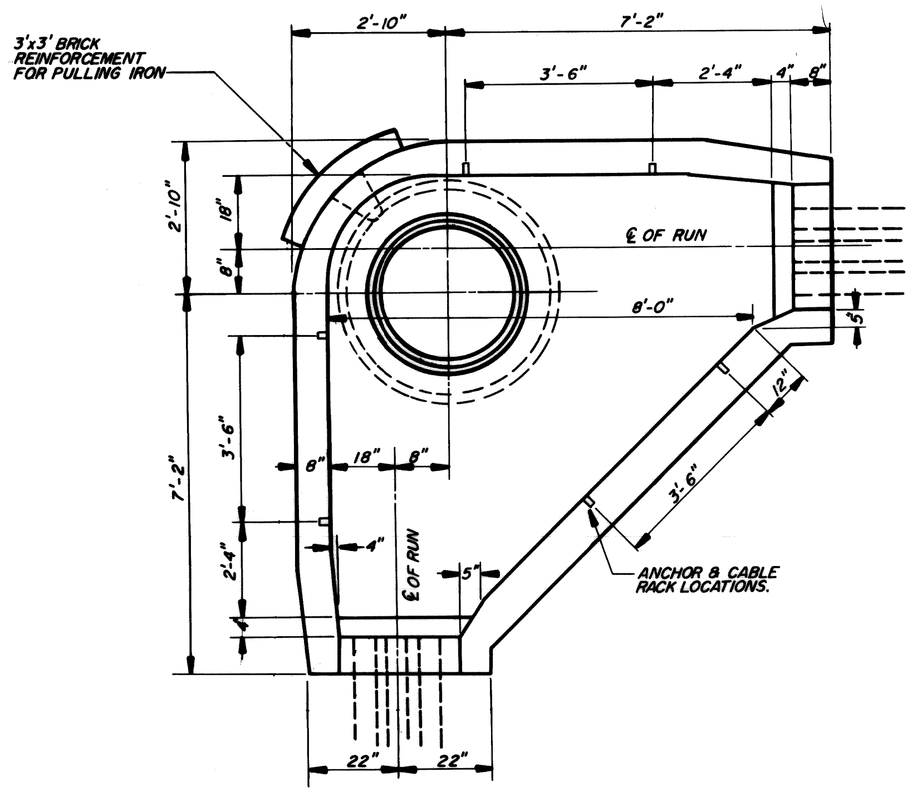

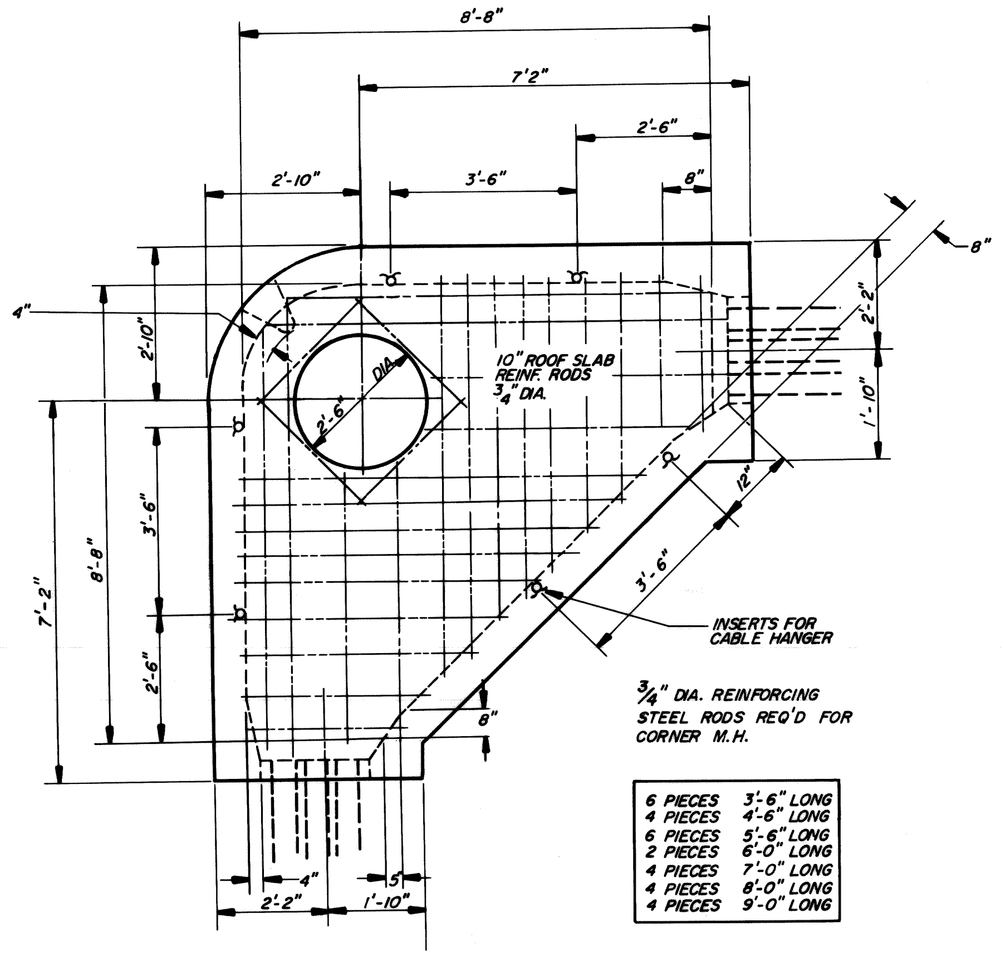

3/4" DIA. REINFORCING STEEL RODS REQ'D FOR CORNER M.H.

6 PIECES	3'-6" LONG
4 PIECES	4'-6" LONG
6 PIECES	5'-6" LONG
2 PIECES	6'-0" LONG
4 PIECES	7'-0" LONG
4 PIECES	8'-0" LONG
4 PIECES	9'-0" LONG

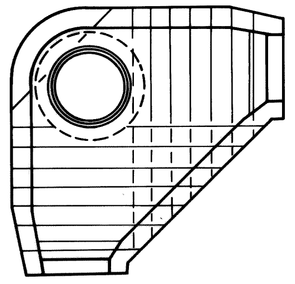

60 LB. "T" RAILS

2 PIECES	4'-6" LONG
1 PIECES	5'-9" LONG
2 PIECES	5'-3" LONG
2 PIECES	6'-3" LONG
2 PIECES	7'-0" LONG
2 PIECES	7'-9" LONG
2 PIECES	8'-6" LONG
2 PIECES	9'-3" LONG
TOTAL WEIGHT 2040 LB.	

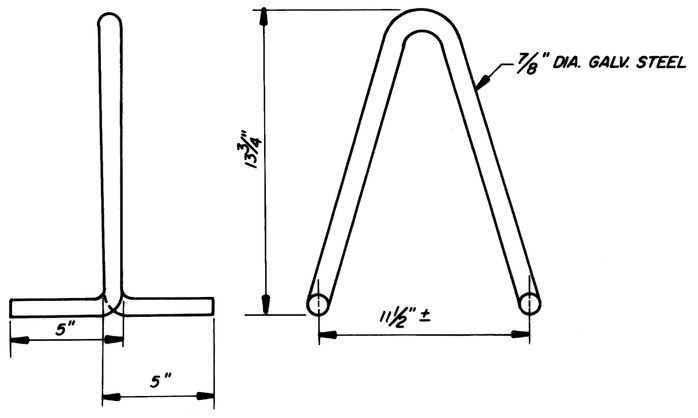

PULLING IRON

N.T.S.

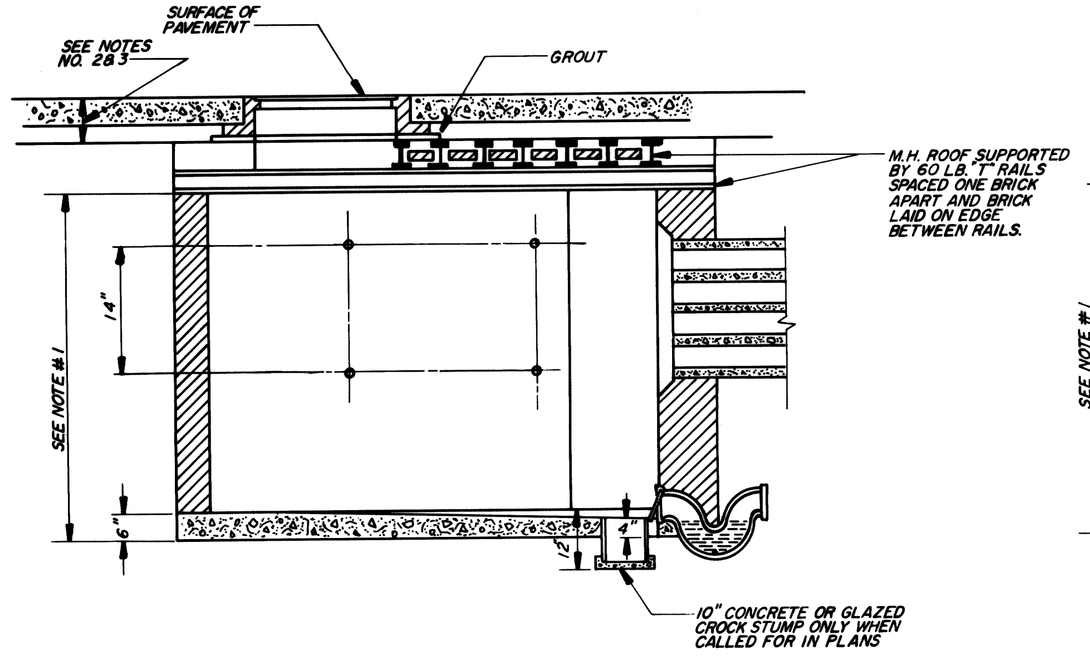

BRICK CORNER MANHOLE

N.T.S.

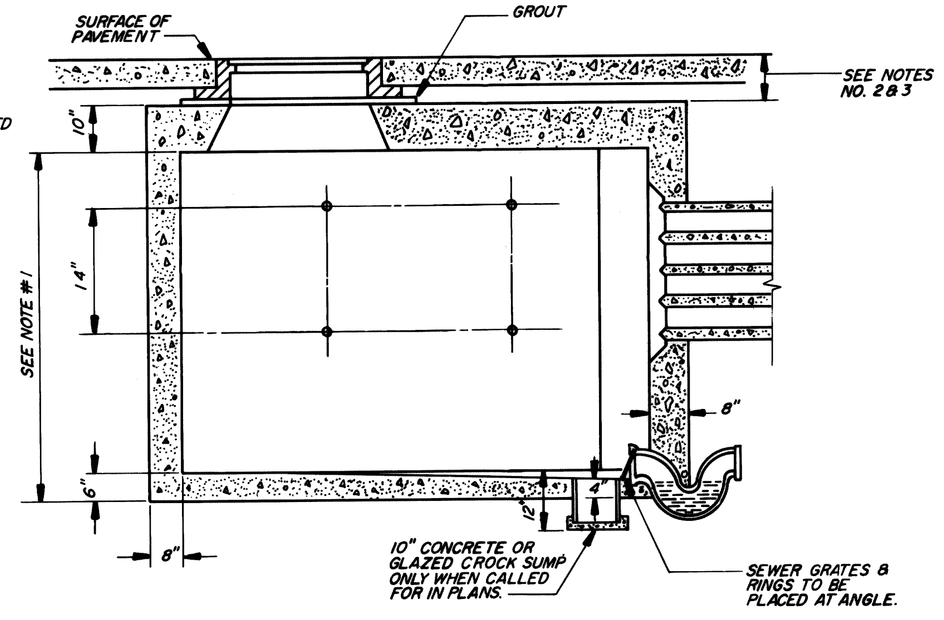

CONCRETE CORNER MANHOLE

N.T.S.

NOTES:

1. THIS DIMENSION NORMALLY 6'-0". SEE SPECIFICATIONS FOR UNUSUAL CONDITIONS.
2. WHERE M.H.S ARE LOCATED BACK OF CURBS, M.H. ROOF MUST BE BUILT 18" BELOW CURB GRADE TO PROVIDE FOR FUTURE PAVEMENT.
3. IN EXISTING PAVEMENT, PROVIDE AT LEAST 3" BETWEEN ROOF AND BASE OF PAVEMENT.
4. BOLTS, RACKS & PULLING IRON TO BE HOT-DIP GALV.
5. ℄ OF RAILS UNDER M.H. FRAME FLANGE TO BE APPROX. 18" FROM ℄'S OF FRAME.
6. M.H. NUMBER TO BE INSTALLED ON MANHOLE WALL IN CONSPICUOUS PLACE.
7. MOUNTING HEIGHT FOR LOWER BOLTS OF CABLE RACK SHALL BE THE AVERAGE HEIGHT OF THE BOTTOM OF LOWEST DUCTS IN MAIN CONDUITS, INSTALL RACKS ON ALL WALLS.
8. 8" THICK BRICK CHIMNEYS WHERE SPECIFIED SHALL BE INCIDENTAL TO APPLICABLE M.H. ITEM.
9. EXCAVATION LIMITS FOR PUBLIC LIGHTING COMMISSION MANHOLES SHALL BE ON VERTICAL PLANES ON THE FOOTING OUTLINE.

revisions	date 8-11-75 designed M. BROWN drawn SIMON checked M. BROWN	approved Milton T. Brown ASST. ENG'R.	CITY OF DETROIT CITY ENGINEERING DEPARTMENT	ATWATER STREET RELOCATION ATWATER TUNNEL CORNER MANHOLE DETAILS	contract no. 07105A	sheet 67 of 81 drawing no: E-15

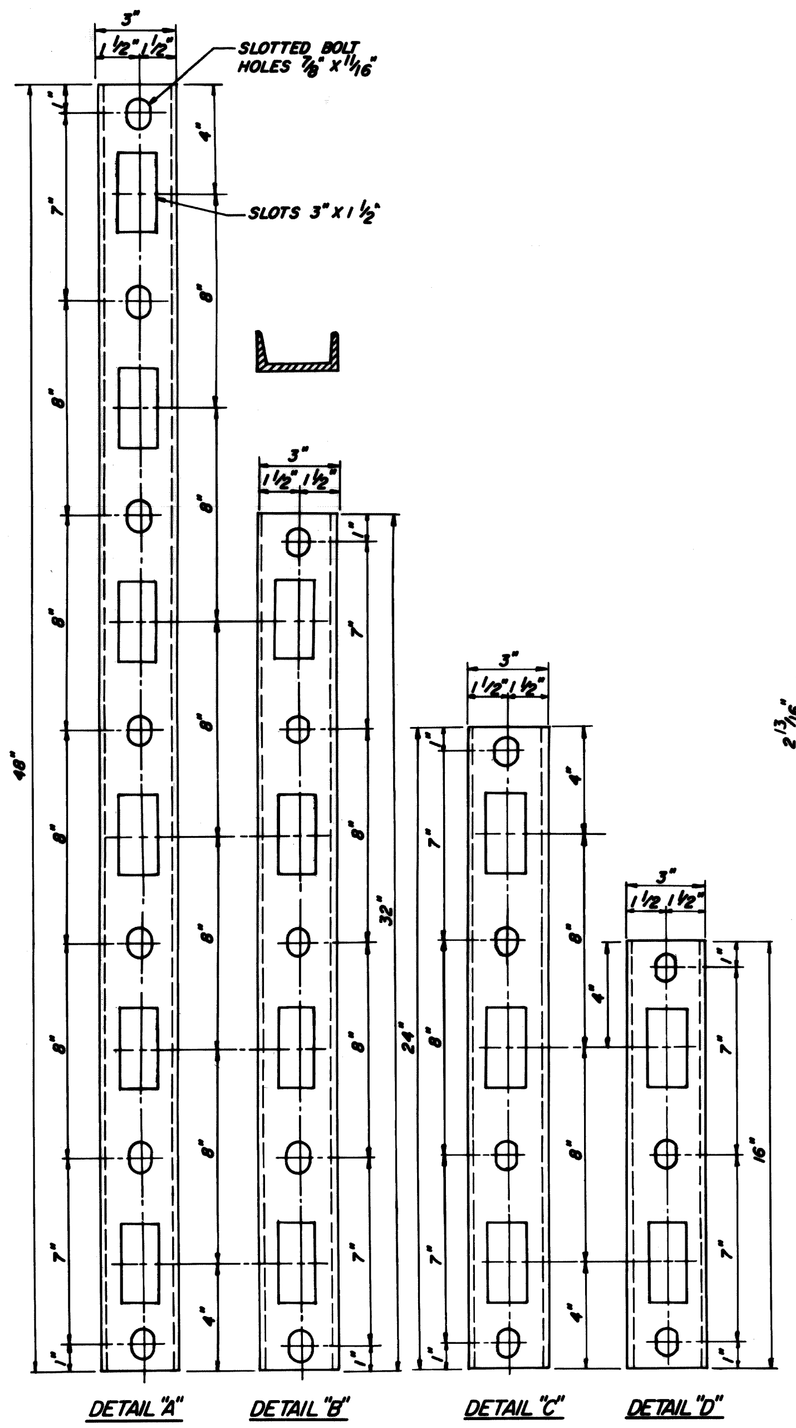

CABLE RACKS
3" STD. 4.1# CHANNEL
SCALE: 1/4" = 1"

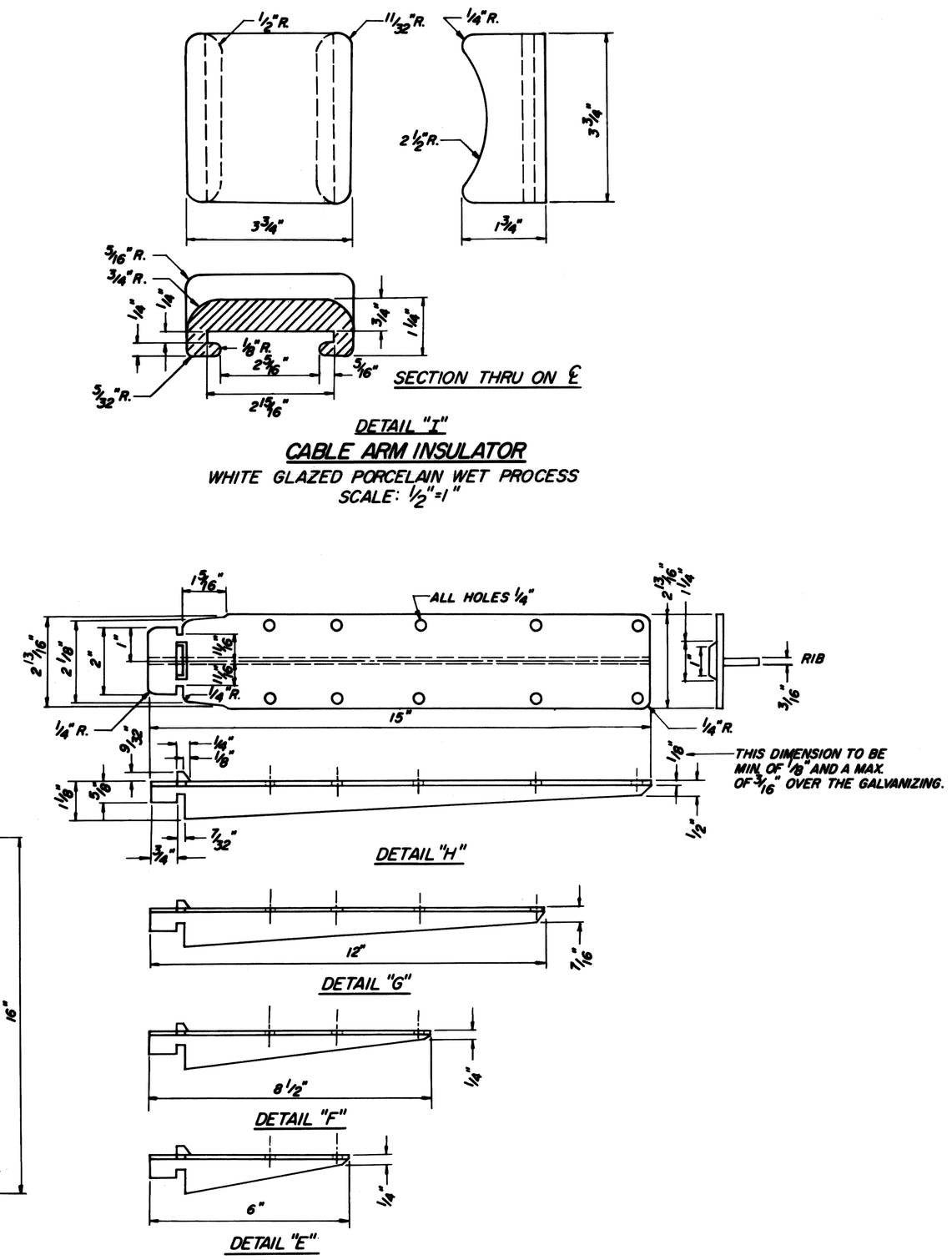

CABLE ARM INSULATOR
WHITE GLAZED PORCELAIN WET PROCESS
SCALE: 1/2" = 1"

CABLE ARMS
MALLEABLE CAST IRON
SCALE: 3/8" = 1"

CABLE RACKS, CABLE ARMS, AND CABLE ARM INSULATORS
SCALE: AS SHOWN

NOTE:
CABLE RACKS SHALL BE GALV. AFTER FAB. IN ACCORDANCE WITH ASTM A-123.
CABLE ARMS SHALL BE GALV. AFTER FAB. IN ACCORDANCE WITH ASTM A-153 53.
ARMS MUST FIT ON INSIDE & OUTSIDE OF RACKS & MUST ALLOW INSULATOR TO FIT LOOSELY.
USE 1/2" GALV. SUPPORTING BOLTS AND EXPANSION ANCHORS.

revisions	date 8-11-75 designed M. BROWN drawn SIMON checked M. BROWN	approved Milton T. Brown ELECT. ENG'R.	CITY OF DETROIT CITY ENGINEERING DEPARTMENT	ATWATER STREET RELOCATION ATWATER TUNNEL CABLE RACK DETAILS	contract no. 07105A	sheet 68 of 91 drawing no: E-16

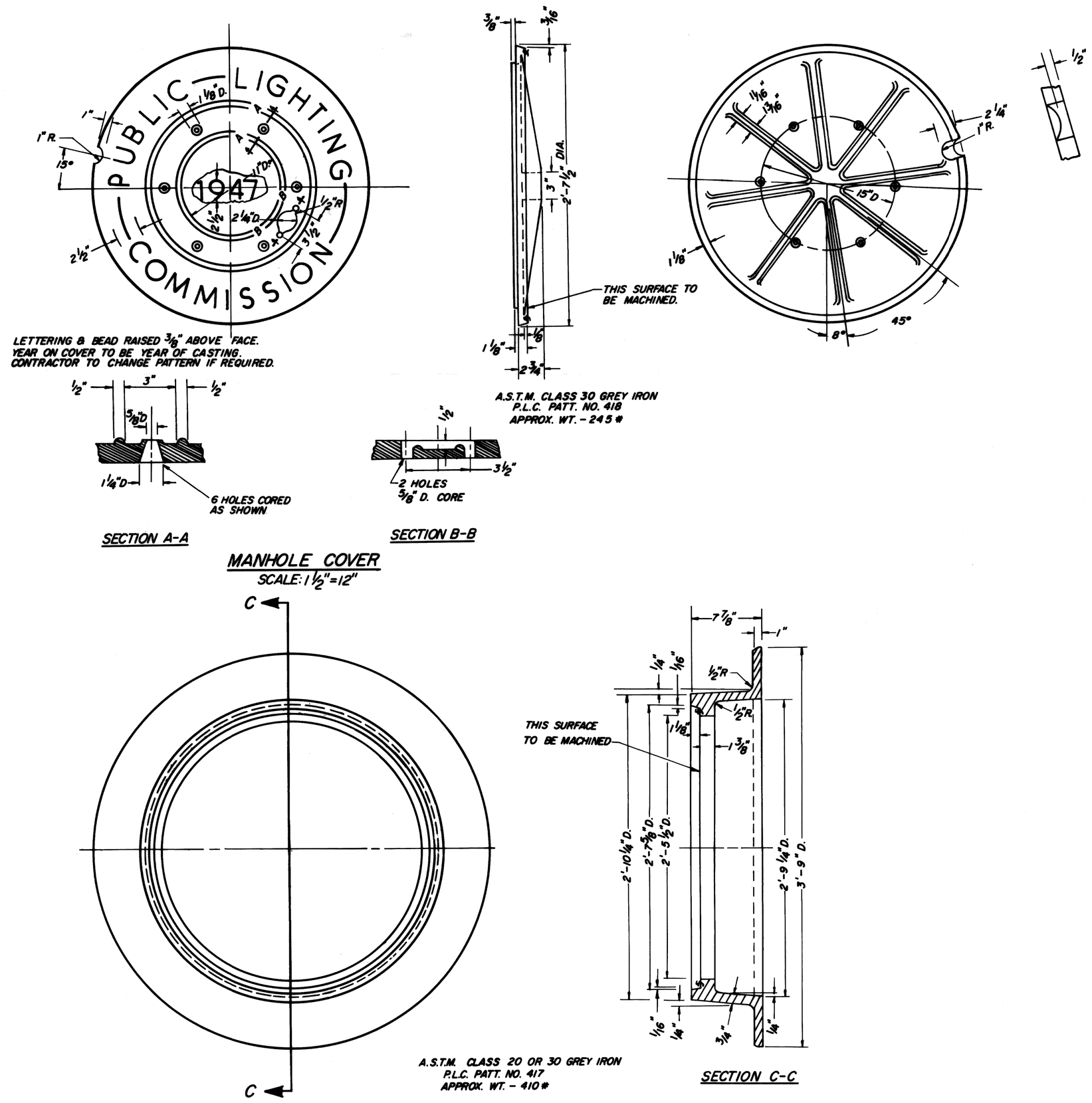

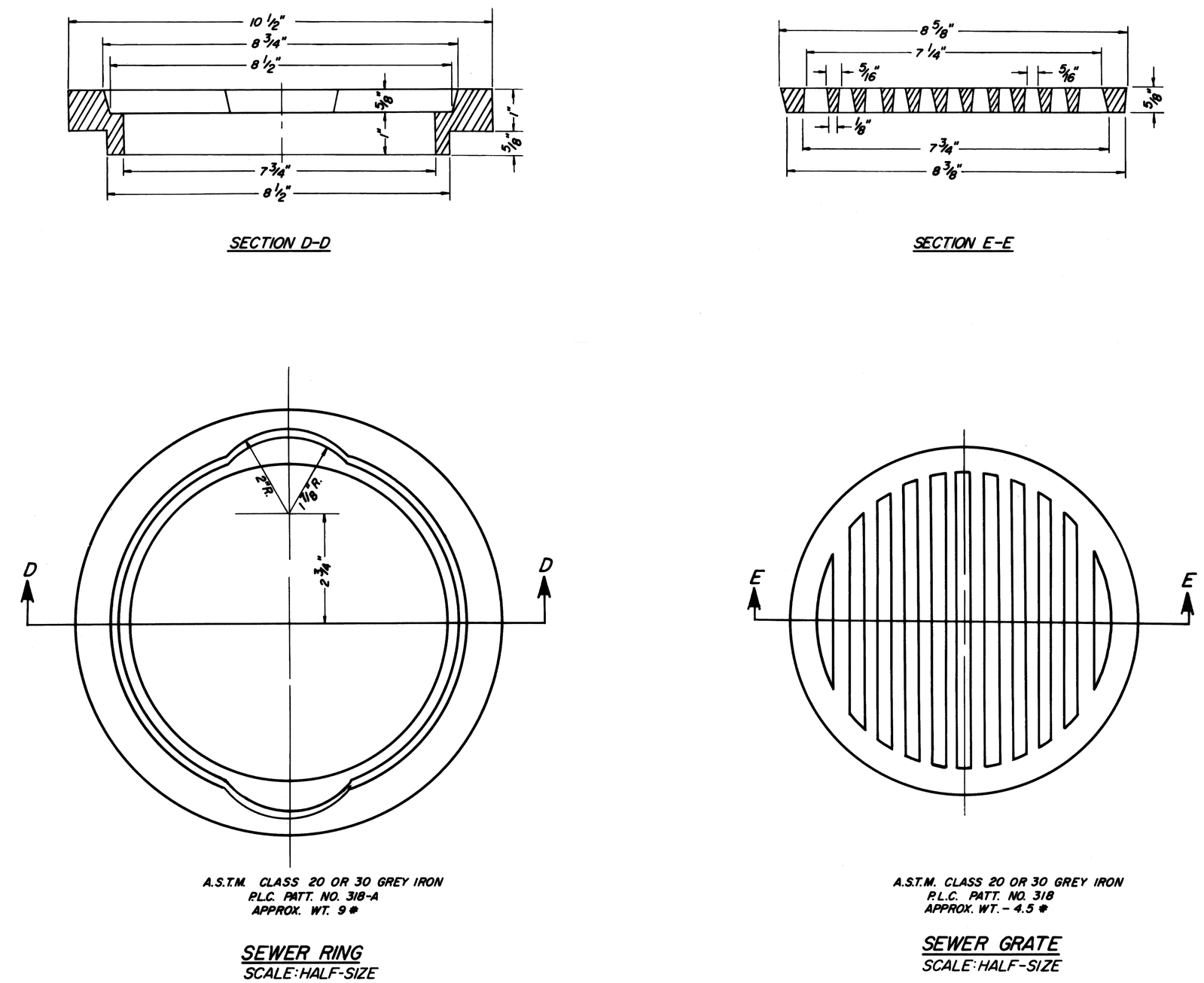

NOTE: FRAMES MAY BE A.S.T.M. CLASS 30 GREY IRON IF THE CONTRACTOR SO ELECTS.

revisions	date 8-11-75 designed M. BROWN drawn SIMON checked M. BROWN	approved Milton T. Brown ELECT. ENG'R.	CITY OF DETROIT CITY ENGINEERING DEPARTMENT	ATWATER STREET RELOCATION ATWATER TUNNEL MANHOLE FRAMES AND COVERS	contract no. 07105A

sheet 69 of 91
drawing no: E-17

277/480V. 3Ø PANEL "L1" SCHEDULE

CKT	LOCATION	QTY.	ITEM	CONT.	W/OUTLET	W/CKT.	BKR/SIZE
1	TUNNEL	7	LTG.	PNL.	455 W	3175 W	3P 20A
2	GUIDEWAY	6	LTG.	PNL.	285 W	1710 W	3P 20A
3	MECH. RM. NO. 1	1	EM/LTG.	RELAY	1000 W	1000 W	2P 20A
4			SPARE				2P 20A
5			SPARE				3P 20A
6			SPARE				3P 20A

TOTAL CONNECTED LOAD – 5885 W

277/480V. 3Ø PANEL "L1A" SCHEDULE

CKT	LOCATION	QTY.	ITEM	CONT	W/OUTLET	W/CKT.	BKR/SIZE
1	TUNNEL	3	LTG.	P.E., T.S.	455 W	1365 W	3P 20A
2	TUNNEL	3	"	"	"	"	"
3	"	3	"	"	"	"	"
4	"	2	"	"	"	"	"
5	"	3	"	"	"	"	"
6	"	2	"	"	"	"	"
7	"	6	"	"	"	2730 W	"
8	"	6	"	"	"	"	"
9	"	4	"	"	"	2275 W	"
10	"	4	"	"	"	1820 W	"
11			SPARE				"
12			"				"

TOTAL CONNECTED LOAD – 16380 W

277/480V. 3Ø PANEL "L2" SCHEDULE

CKT	LOCATION	QTY.	ITEM	CONT	W/OUTLET	W/CKT	BKR/SIZE
1	TUNNEL	6	LTG.	PNL	455 W	2730 W	3P 20A
2	GUIDEWAY	7	LTG.	PNL.	285 W	1310 W	3P 20A
3	TUNNEL OFF	1	EM/LTG.	RELAY	1000 W	1000 W	2P 20A
4			SPARE	PNL			2P 20A
5			"	"			
6			"	"			3P 20A
7	UNIT SUB RM.	8	LTG.	$S_3 \cdot S_3$	2/40 W. R.S.		
	PRI. SWGR. RM.	8	"	"	" "	1600 W	1P 20A
8	—		SPARE	PNL			1P 20A
9	—		"	"			"
10	—		"	"			"
11-16	—		SPACES				"

TOTAL CONNECTED LOAD – 6640 W

277/480V. 3Ø PANEL "L2A" SCHEDULE

CKT	LOCATION	QTY.	ITEM	CONT	W/OUTLET	W/CKT	BKR/SIZE
1	TUNNEL	3	LTG.	P.E.T.S.	455 W	1365 W	3P 20A.
2	"	3	"	"	"	"	"
3	"	2	"	"	"	"	"
4	"	2	"	"	"	"	"
5	"	3	"	"	"	"	"
6	"	3	"	"	"	"	"
7	"	6	"	"	"	2730 W	"
8	"	6	"	"	"	"	"
9	—		SPARE				"
10	—		"				"
11	—		"				"
12	—		"				"

TOTAL CONNECTED LOAD – 12740 W

277/480V. 3Ø PANEL "L3" SCHEDULE

CKT	LOCATION	QTY.	ITEM	CONT	W/OUTLET	W/CKT.	BKR/SIZE
1	TUNNEL	7	LTG.	PNL.	455 W	3175 W	3P 20A
2	FIRE PROT. RM.		EM/LTG.	RELAY	1000 W	1000 W	"
3	—		SPARE	PNL.			2P 20A
4	—		"	"			3P 20A
5			"	"			"
6	FIRE PROT. RM.	3	LTG.	S	2/40 W R.S.	300 W.	1P 20A
7-15	—		SPACES				9-1P 20A

TOTAL CONNECTED LOAD – 4475 W

277/480V 3Ø PANEL "L3A" SCHEDULE

CKT	LOCATION	QTY.	ITEM	CONT.	W/OUTLET	W/CKT.	BKR/SIZE
1	TUNNEL	3	LTG.	P.E.,T.S.	455 W	1365 W	3P 20A
2	"	3	"	"	"	"	"
3	"	3	"	"	"	"	"
4	"	2	"	"	"	910 W	"
5	"	3	"	"	"	1365 W	"
6	"	2	"	"	"	910 W	"
7	"	6	"	"	"	2730 W	"
8	"	6	"	"	"	"	"
9	"	5	"	"	"	2275 W	"
10	"	5	"	"	"	2275 W	"
11			SPARE				"
12			"				"

TOTAL CONNECTED LOAD – 17290 W

277/480V 3Ø PANEL "L4" SCHEDULE

CKT	LOCATION	QTY	ITEM	CONT	W/OUTLET	W/CKT.	BKR/SIZE
1	TUNNEL	6	LTG.	PNL.	455 W	2730 W	3P 20A.
2	MECH. RM. NO. 4	1	EM/LTG.	RELAY	1000 W	1000 W	2P 20A
3			SPARE	PANEL			2P 20A
4			SPARE	PANEL			3P 20A

TOTAL CONNECTED LOAD – 3730 W

120/208V. 3Ø PANEL "R5" SCHEDULE

CKT	LOCATION	QTY.	ITEM	CONT	W/OUTLET	W/CKT.	BKR/SIZE
1	PLENUM	5	LTG.	PNL.	100 W	500 W.	1P 20A
2	"	5	"	"	"	"	"
3	"	5	"	"	"	"	"
4	"	4	"	"	"	400 W.	"
5	PLENUM/MECH. RM. NO 1	4/4	"	S_3/S_3	100W/200W	1800 W	"
6	PLENUM	3	"	S_P	100 W	300 W.	"
7	MECH. RM. NO. 1	8	"	S_3S_3	200 W	1600 W.	"
8	—	X	SPARE	~~AUTO.~~	~~200W~~	~~200W~~	"
9			SPACE	PNL.			"
10	NORTHEAST PLENUM	2	PIPE HTG. CABLE	THERMO.	875 W.	1750 W.	"
11			SPARE	PNL.			"
12	NORTHEAST PLENUM	2	PIPE HTG. CABLE	THERMO.	875 W.	1750 W.	"
15 X/8	MECH. RM. NO. 1	9 X/8	RECPT.	PNL	200 W	~~1200W~~ 800 W	"
14	" " "	7 X/8	"	"	"	~~1400W~~ 1400 W	"
13 X/8	" " "	6 X/8	DAMPER OPERATORS	INTER-LOCK	140 W	~~1400W~~	X
X/8	" " "	1	MONITOR RELAY	INTER-LOCK	200 W	1040 W	"
X/8	" " "		SPARE	PNL			"
17	" " "		"	"			"
18	" " "		SPARE	PNL			"
19	" " "		"	"			"
20	TUNNEL		PIPE HTG. CABLE	THERMO	7W/FT.	1302 W	"
21	MECH. RM. NO. 1		UNIT HTR.	T	10000 W	10000 W	3P 50A
22	"		"	"	"	"	"
23	"		3/4 HP COMP	PS	1000 W	1000 W	3P 20A
24	FIRE PROT. RM		1½ HP COMP	PS	2000 W	2000 W	"
25,26	—		SPARE	PNL.			"

TOTAL CONNECTED LOAD – ~~3[illegible]~~ W 33,642

120/208V. 3Ø PANEL "R6" SCHEDULE

CKT.	LOCATION	QTY	ITEM	CONT	W/OUTLET	W/CKT	BKR/SIZE
1	PLENUM	5	LTG.	PNL	100 W	500 W	1P 20A.
2	"	5	"	"	"	"	"
3	"	4	"	"	"	400 W	"
4	"	4	"	"	"	400 W	"
5	PLENUM/MECH. RM. NO 2	4/4	"	S_3/S_3	100W/200W	1600 W	"
6	"		"	SP	100 W		
	STAIR		"	S	100 W	500 W	"
7	MECH. RM. NO. 2	7	"	S_3S_3	200 W	1400 W	"
8	TUNNEL OFFICE	1	MASTER CONTROL DEVICE	ALM.	200 W	~~200W~~ 200	"
9	TUNNEL OFFICE ~~E-5B~~	X	MONITOR RELAY	AUTO.	200 W	~~400W~~ 400	"
10	TUNNEL OFFICE	1	MASTER CONTROL RELAY	PNL	200 W	400 W	"
11	CABLE VAULT	3	LTG.	SWP	100 W	300 W	"
12	TUNNEL OFFICE	1	GAS ANALYZER	AUTO	2000 W	2000 W	1P-30A
13	PLENUM MECH. RM. #2	9	RECPT.	PNL	200 W	1800 W	1P-20A
	UNIT SUB. RM.		X	X	~~200W~~		
15	~~PRI. SWG. RM.~~	1	MONITOR RELAY	AUTO	200 W	~~800W~~ 1040 W	~~1P-20A~~
X	MECH. RM. NO. 2	6 X/8	DAMPER OPERATORS	INTER-LOCK	140 W	~~1200W~~	1P-20A
X/8	" " "	X	SPARE	INT-LOCK	~~200W~~ 7W/FT.		
	UNIT SUB., PRI., SWG. RM.	1	RECPT.	PNL	200 W	1575 W.	1P-20A
16	PRIMARY SWG. RM.	6	1HP FCS CURTAIN	SPB	750 W	~~1375 W~~ 750 W.	3P. 20A.
17	MECH. RM. NO. 2		UNIT HTR	T	5000 W	5000 W.	3P-30A.
18	E&W TUNNEL PORTALS		TRAFFIC SIGNALS/TH	6-S, 5 & THERMO.	450/400 W. LTG 2.4 W. HTR.	2724 W.	3P-20A.

CKT	LOCATION	QTY	ITEM	CONT	W/OUTLET	W/CKT	BKR/SIZE
19	PRI. SWGR RM.		3/4 HP COMP.	AUTO	4000 W	4000 W	3P 20A
20	MECH. RM. NO. 2		3/4 HP COMP.	P.S.	1000 W	1000 W	3P 20A
21	"		UNIT HT.	T	5000 W	5000 W	3P 30A
22	UNIT SUB. RM.		"	T	4000 W	4000 W	3P 20A
23	PRI. SWGR. RM		"	T	3300 W	3300 W	3P 20A
24	UNIT SUB. RM.		EMERG. CUSTOM	SPB	750 W	750 W	3P 20A

TOTAL CONNECTED LOAD – ~~37,[illegible]~~ W 38,833

120/208V. 3Ø PANEL "R7" SCHEDULE

CKT	LOCATION	QTY.	ITEM	CONT	W/OUTLET	W/CKT	BKR/SIZE
1	PLENUM	5	LTG.	PNL.	100 W	500 W	1P. 20A.
2	"	5	"	"	"	"	"
3	"	4	"	"	"	400 W	"
4	"	4	"	"	"	"	"
5	PLENUM/MECH. RM. NO. 3	4/4	"	S_W/S	100W/200W	1800 W	"
6	PLENUM	4	"	S_P	100 W	400 W.	"
7	MECH. RM. NO. 3	7		S_P S_3	200 W	1400 W	"
8	NORTHWEST PLENUM	2	PIPE HTG. CABLE	THERMO	875 W.	1750 W	"
9	FIRE PROT. RM.	1	MONITOR RELAY	AUTO.	200 W	200 W	"
10	NORTHWEST PLENUM	2	PIPE HTG. CABLE	THERMO	875 W	1750 W.	"
11	—		SPARE	PNL.			"
12	PLENUM SOUTHWEST PLENUM	1/2	PIPE HTG. CABLE	THERMO	35 W/FT. 875 W.	84 W. 1750 W.	"
13	FIRE PROT. RM.	1	G.F.E.P.	PNL.	200 W.		
	"		DX & SUP.	"	"	600 W	"
16 X	PLENUM, MECH. RM. NO 3	X/6 X/1	COMPRESSOR MON. REL	INTERLOCK AUTO.	140 W 200 W	1040 W 200	"
14 X	PLENUM, MECH. RM. NO 3	X/3	RCP	PNL	" 200 W	~~800~~ 800 W	"
15 X	" " " "	X/9	RCP	"	"	~~1800~~ 1800 W	"
17	FIRE PROT RM.		1½ H.P. COMP	P.S.	2000 W	2000 W	3P 20A
18	"		UNIT HTRS.	T	6500 W	6500 W	3P 30A
19	MECH. RM. NO. 3		"	T	5000 W	5000 W	3P 30A
20	"		"	T	"	"	3P 30A
21	"		3/4 HP COMP	P.S	1000 W	1000 W	3P 30A
22	VEHICAL TUNNEL		SIGN LIG.	CO. CONT.	2/35 W H.C.	800 W	3P 20A
23-28	—		SPACES				1P 20A

TOTAL CONNECTED LOAD – ~~2,[illegible]~~ W 2,924

120/208V. 3Ø PANEL "R8" SCHEDULE

CKT	LOCATION	QTY	ITEM	CONT	W/OUTLET	W/CKT	BKR/SIZE
1	PLENUM	5	LTG.	PNL	100 W	500 W	1P. 20A.
2	"	5	"	"	"	"	"
3	"	5	"	"	"	"	"
4	"	4	"	"	"	400 W	"
5	PLENUM, MECH & STOR. RM	5	"	$S_1 S_{WP}$	"	500 W	"
6	PLENUM	3	"	S_P	"	300 W	"
7	MECH. RM. NO. 4	9	"	$S_3 S_3 S_3$	200 W	1800 W	"
8	" " " 4	1	MONITOR RELAY	AUTO.	200 W	200 W	"
9	PLENUM		PIPE HTG. CABLE	THERMO	35 W/FT.	140 W	"
10	"		PIPE HTG. CABLE	"	" / "	1050 W	"
11	MECH. RM. NO. 4	9	LTG.	2S	200 W	1800 W.	"
12	—		SPARE	PNL.			"
13	MECH. ~~STOR.~~ RM. #4	X/6	DAMPER OPERATORS	INTER-LOCK	140 ~~200~~ W	1040 ~~800~~ W	"
14	PLENUM & MECH. RM.	X/6	RCPT.	PNL	200 W	1200 W	"
15	" " "	X/9	"	"	"	1800 ~~1600~~ W	"
16	MECH. RM. NO 4		½ H.P. COMP.	P	400 W	400 W	"
17	—		SPARE	PNL.			"
18	—		"	"			"
19	MECH. RM. NO. 4		¾ H.P. COMP.	P.S.	1000 W	1000 W	3P 20A
20	SOUTHEAST PLENUM	4	PIPE HTG. CABLE	THERMO	875 W.	3500 W.	3P 20A
21	MECH. RM. NO. 4		UNIT HTR.	T	7500 W	7500 W	3P 40A
22	MECH. RM. NO. 4		"	T	7500 W	7500 W	3P 40A

TOTAL CONNECTED LOAD – ~~23,[illegible]~~ W 28,290

120/240V. 1Ø PANEL "E" SCHEDULE

CKT.	LOCATION	QTY.	ITEM	CONT.	W/OUTLET	W/CKT.	BKR/SIZE
1,3	TUNNEL OFFICE		EX. LTG.	PNL	2/6 W		
	PRI. SWG. RM		"	"	"		
	UNIT. SUB. RM.		"	"	"		
	STAIR		"	"	"		
	MECH. RM. NO. 2		"	"	"	250 W (2 CKTS)	2-1P. 20A
2,4	FIRE PROT. RM.		"	"	"		
	MECH. RM. NO. 3		"	"	"	100 W (2 CKTS)	"
5,7	MECH. RM. NO. 1		"	"	"	100 W (2 CKTS)	"
6,8	MECH. RM. NO. 4		"	"	"	100 W (2 CKTS)	"
9,10	TUNNEL OFFICE		F.A. PNL	AUTO-MAN	400 W	400 W (2 CKTS)	"
				MAIN CIRCUIT BREAKER - 2P-50A			

TOTAL CONNECTED LOAD – 950 W

277/480 V. 3Ø PANEL "L4A" SCHEDULE

CKT	LOCATION	QTY.	ITEM	CONT.	W/OUTLET	W/CKT	BKR/SIZE
1	TUNNEL	3	LTG.	P.E., T.S.	455 W	1365 W	3P. 20 A.
2	"	2	"	"	"	910 W	"
3	"	3	"	"	"	1365 W	"
4	"	2	"	"	"	910 W	"
5	"	3	"	"	"	1365 W	"
6	"	2	"	"	"	910 W	"
7	"	3	"	"	"	1365 W	"
8	"	3	"	"	"	1365 W	"

TOTAL CONNECTED LOAD – 9555 W

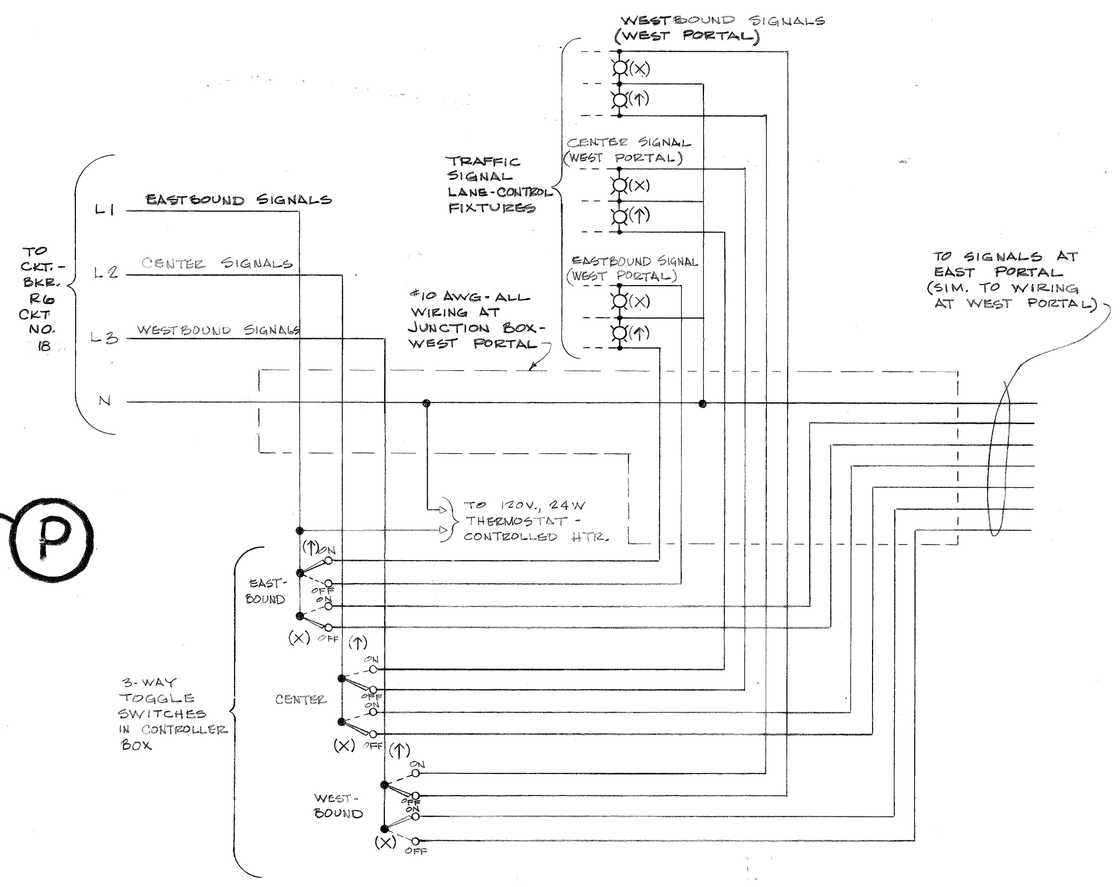

SCHEMATIC DIAGRAM - CONTROL OF TUNNEL PORTAL TRAFFIC SIGNALS
- NO SCALE -

revisions				
	AS BUILT			
P	PIPE HEATING CABLE CKT'S ADDED TO PANELS "R5", "R7", "R8"	GS	MB	1/7/76
O	REVISED PER EQUIP. SHOP DWG'S.	GS	MB	1/7/76
J	REVISED PER LTR. SHOP DWG.	GS	MB	1/7/76

DRAWN – CHECKED – APPD. – DATE

date 8-11-75
designed M. BROWN
drawn J. EDWARDS
checked S. SIMON

approved Milton T. Brown
ELECT. ENG'R.

CITY OF DETROIT
CITY ENGINEERING DEPARTMENT

ATWATER STREET RELOCATION
ATWATER TUNNEL

PANELBOARD SCHEDULES & DETAILS

contract no. 07105 A

sheet 70 **of** 81
drawing no: E-18

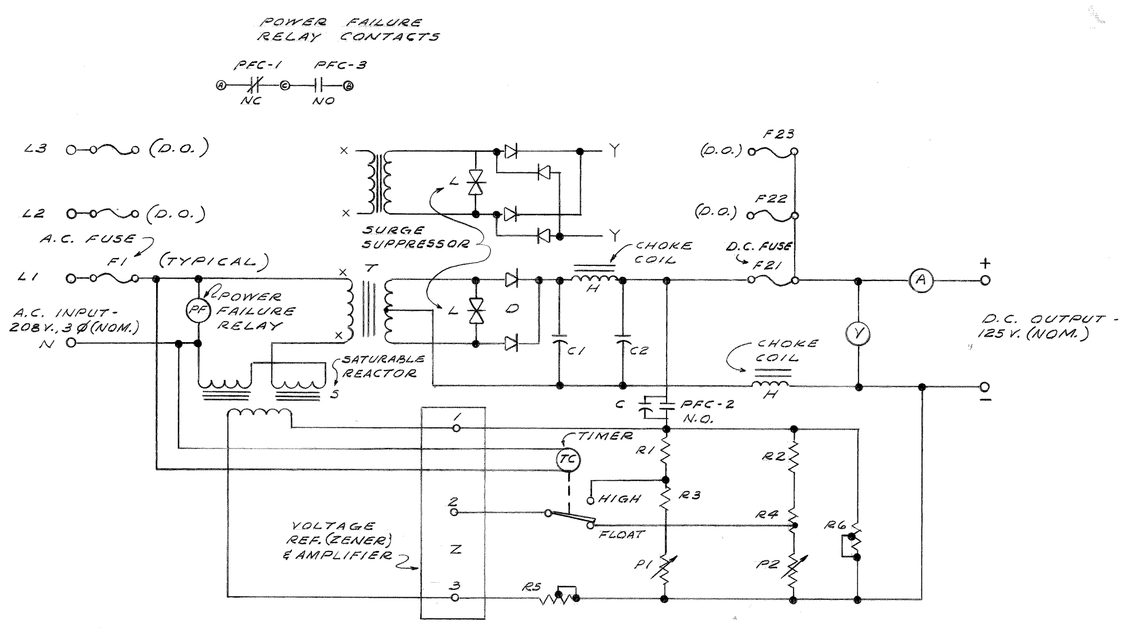

TYPICAL SCHEMATIC CONTROL DIAGRAM - FILTERED 3-PHASE FULL WAVE BATTERY CHARGER
- NO SCALE -

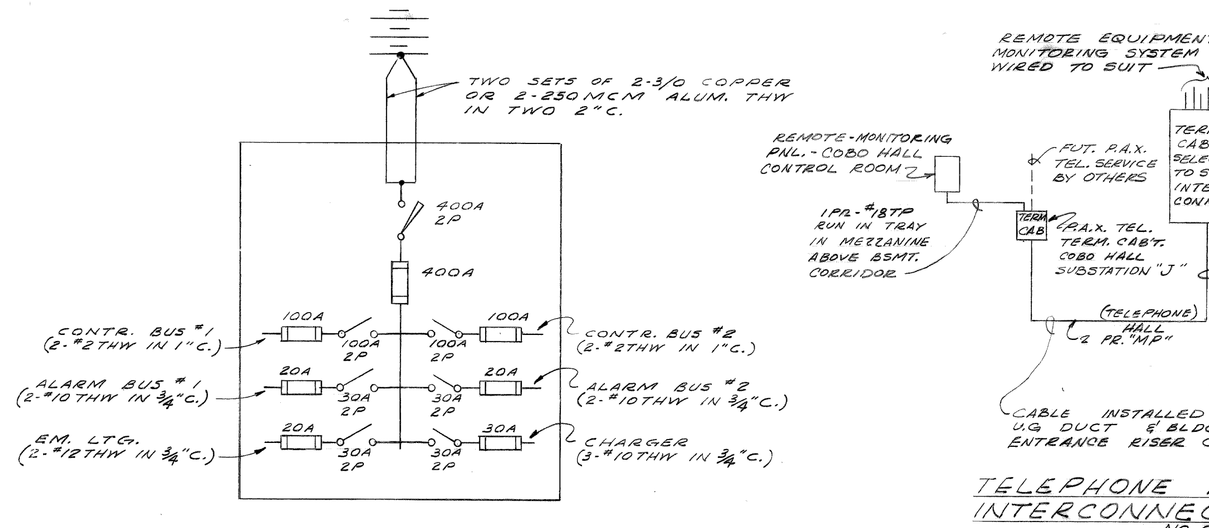

125 V. 2 W. D.C. DIST. PNL. "BD"
- NO SCALE -

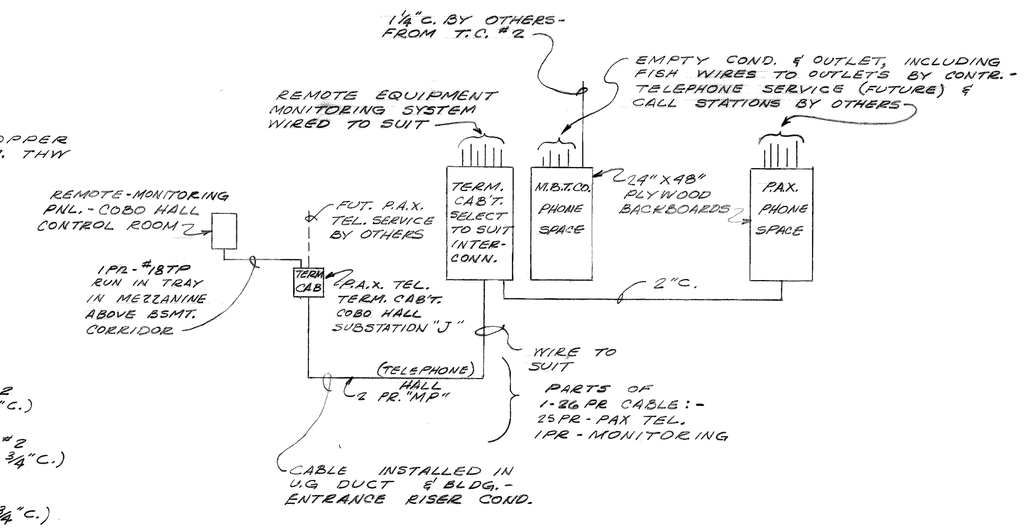

TELEPHONE AND MONITORING INTERCONNECTION DIAGRAM
- NO SCALE -

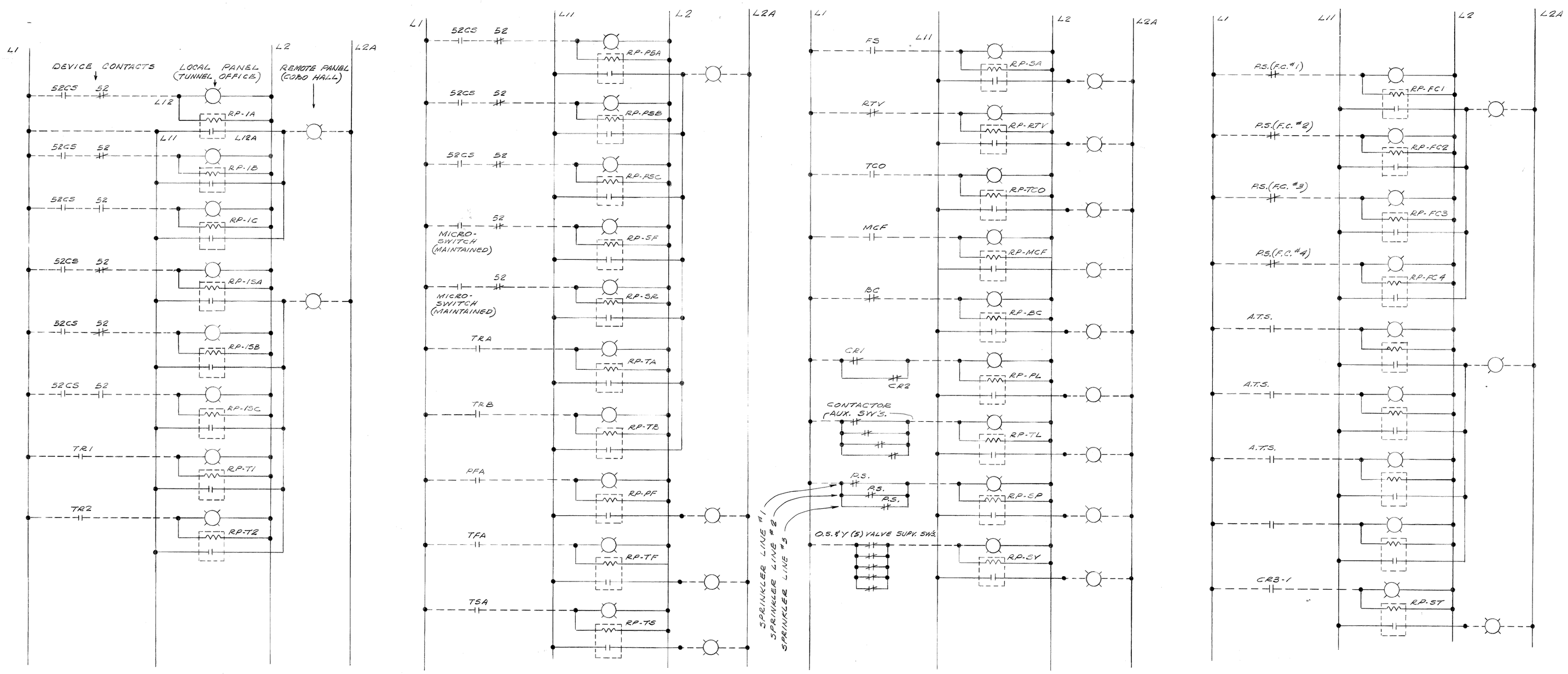

TUNNEL OFFICE & REMOTE MONITORING SYSTEM DIAGRAM
NO SCALE

SCHEDULE OF SYMBOLS

WF	WATER-FLOW SPRINKLER ALARM AUTOMATIC INITIATING STATION
T	SET-TEMP. FIRE-ALARM AUTOMATIC INITIATING STATION
	EMERGENCY TELEPHONE STATION
PS	PRESSURE-LOSS SPRINKLER ALARM AUTOMATIC INITIATING STATION
M	MICROPHONE STATION
V	VALVE-POSITION SUPERVISORY SWITCH - SPRINKLER LINES
	P.A.X. TELEPHONE STATION
	BELL TELEPHONE STATION
	DISTRIBUTION PANEL - LIGHTING, POWER, RECEPTACLE
D.C.	D.C. DISTRIBUTION PANEL
A.T.S.	AUTOMATIC TRANSFER SWITCH
	LIGHTING CONTACTOR
T	ROOM THERMOSTAT
W.P.	WEATHER-PROOF
	CONCEALED RACEWAY - ABOVE FLOOR
	CONCEALED RACEWAY - WITHIN FLOOR
	EXPOSED RACEWAY
	CIRCUIT DESIGNATION ; NO OF PANEL CKTS, HOME-RUN
#	CIRCUIT DESIGNATION ; NO OF WIRES, IF OVER 2
TP	TWISTED-PAIR, SHIELDED COMMUNICATION WIRE
MP	MULTIPLE TWISTED-PAIR, SHIELDED COMMUNICATION CABLE.
E.P.	ELECTRIC-PNEUMATIC RELAY
	WIRING TURNED DOWN
	WIRING TURNED UP
M.H.	MANHOLE
H.H.	HANDHOLE
S	SUPERVISORY TRANSMITTING DEVICE
L.S.O.	LIMIT SWITCH - "OPEN"
L.S.C.	LIMIT SWITCH - "CLOSED"
F.D.	FIRE DEPARTMENT
F.A.	FIRE ALARM
P.E.	PHOTO ELECTRIC LIGHTING CONTROL STATION
T.S.	TIME-SWITCH CONTROL STATION
P.S.	PRESSURE-SWITCH CONTROL STATION
	TROUBLE BUZZER
S	FIRE ALARM SPEAKER - ONE WAY
S	FIRE ALARM SPEAKER - TWO WAY
B	MANUAL FIRE-ALARM INITIATING STATION
	EXPLOSION-PROOF SEALING FITTING
E	EXPLOSION - PROOF
W.F.	WATER-FLOW SWITCH CONTROL STATION
	TROUBLE BUZZER
	STRUCTURAL EXPANSION JOINT - WITH RACEWAY EXPANSION FITTINGS

	FLUORESCENT FIXTURE, 2-40W
	INCANDESCENT FIXTURE, CEILING-MTD.
	INCANDESCENT FIXTURE, WALL-MTD.
	INCANDESCENT FIXTURE, ASYMMETRIC-DISTRIBUTION
	HIGH-INTENSITY DISCHARGE (METAL-HALIDE) FIXTURE, WALL-MTD.
	PANEL-CONTROLLED VEHICLE-TUNNEL & QUIDSWAY LTG. FIXT. (OTHERS AUTOMATICALLY CONTROLLED, PER SPEC.)
	HIGH-INTENSITY DISCHARGE (MERCURY-VAPOR) FIXTURE, WALL-MTD.
M.H. GWE-400	HIGH-INTENSITY DISCHARGE 400W. METAL-HALIDE FIXTURE.
GWR-1-250	HIGH-INTENSITY DISCHARGE 250W. MERCURY-VAPOR FIXTURE.
	FIXTURE-TYPE UNIFORM, AS NOTED
	EXIT LIGHT FIXTURE
	ELECTRIC SPACE HEATER (AS NOTED), CEILING-SUSPENDED
	MOTOR
RV	REDUCED-VOLTAGE STARTER (AS NOTED), MAGNETIC
R	REVERSING-TYPE MAGNETIC FULL-VOLTAGE STARTER
	MAGNETIC FULL-VOLTAGE STARTER
	SAFETY SWITCH
	SIGN FIXTURE, AS NOTED AND DETAILED
TS	TRAFFIC-SIGNAL FIXTURE, AS NOTED AND DETAILED
J J WF J	JUNCTION BOX
TC	TERMINAL CABINET
	GROUNDING TYPE DUPLEX RECEPTACLE
GFI	GROUND-FAULT INTERRUPTER TYPE DUPLEX RECEPT.
S	SINGLE-POLE LIGHT SWITCH, TOGGLE-OPERATED
S_3	THREE-WAY LIGHT SWITCH, TOGGLE-OPERATED
S_P	COMBINATION LIGHT SWITCH AND PILOT-LAMP
S_{PB}	REVERSING PUSH-BUTTON CONTROL STATION, OPEN-STOP-CLOSE
S_{PB}	PUSH-BUTTON CONTROL STATION, START-STOP
FA	FIRE-ALARM CONTROL AND SUPERVISORY PANEL
C	CITY MASTER FIRE-ALARM BOX
R	RELAY-MONITORING, REMOTE-ENCLOSURE MOUNTED
FS_{EP}	FLOAT SWITCH, EXPLOSION-PROOF
T.O.	TIME-OPENING DEVICE CONTACT
T.C.	TIME-CLOSING DEVICE CONTACT
EM, E	EMERGENCY UNIT - INCL. AUXILIARY DEVICES AND CIRCUIT-WIRING PROVISION

revisions	date 8-11-75 designed M. BROWN drawn SIMON checked M. BROWN	approved Milton T. Brown ELECT. ENG'R.	CITY OF DETROIT CITY ENGINEERING DEPARTMENT	ATWATER STREET RELOCATION ATWATER TUNNEL SYMBOLS BATTERY CHARGER & MISC. DETAILS	contract no. 07105 A	sheet 71 of 81 drawing no: E-19

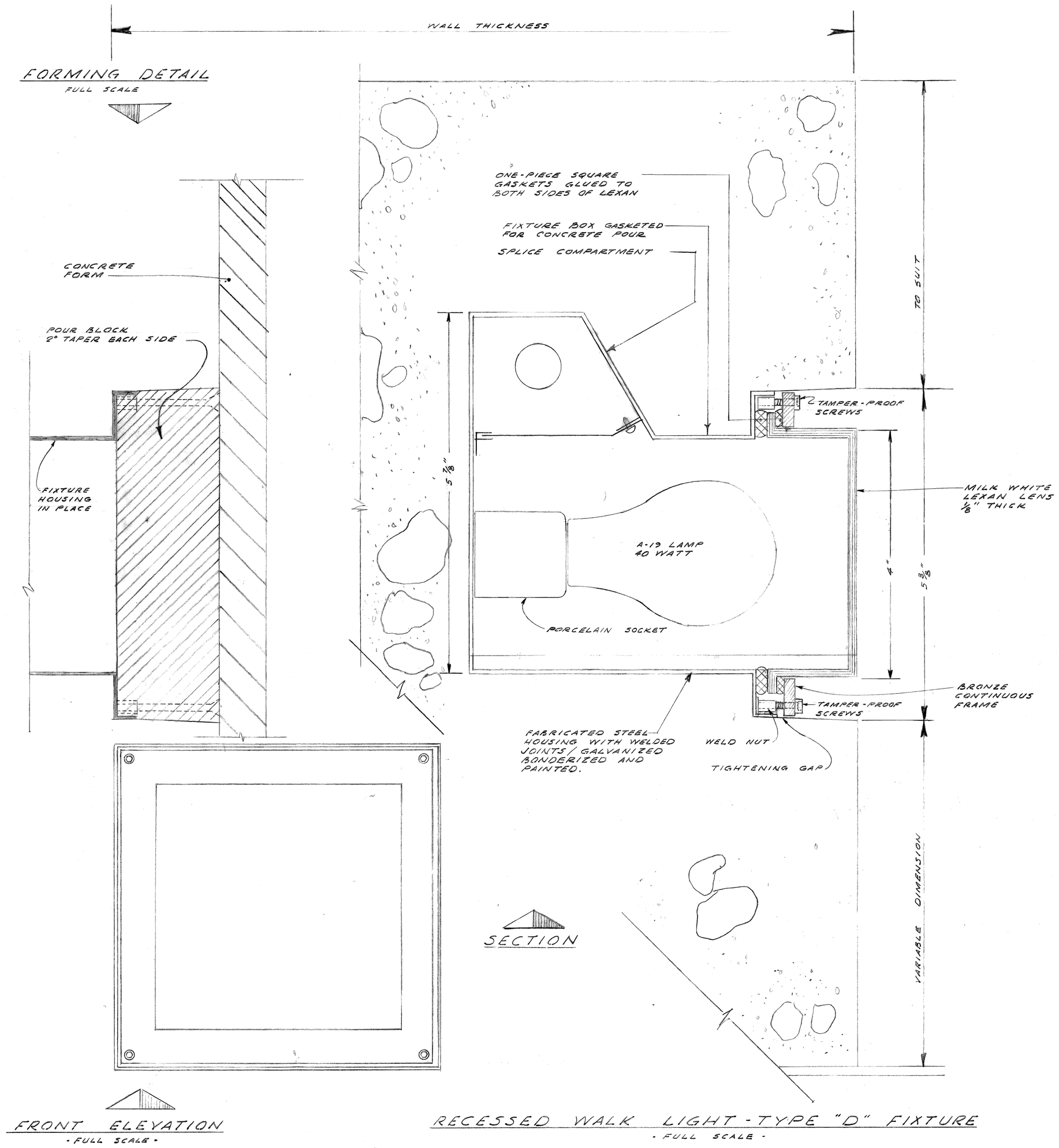

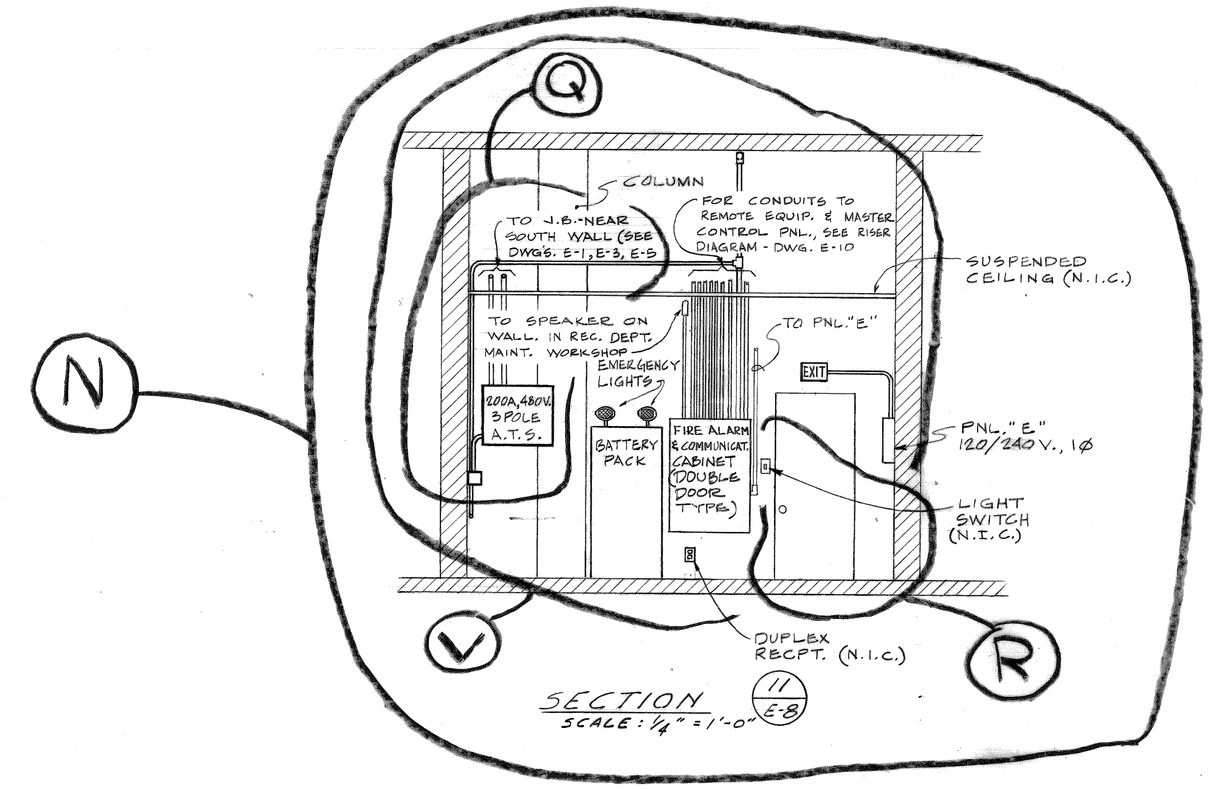

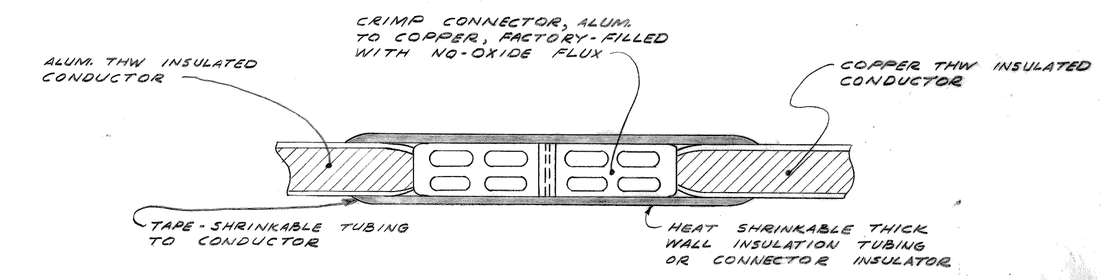

ALUMINUM TO COPPER TERMINATION PIG TAIL DETAIL
- NO SCALE -

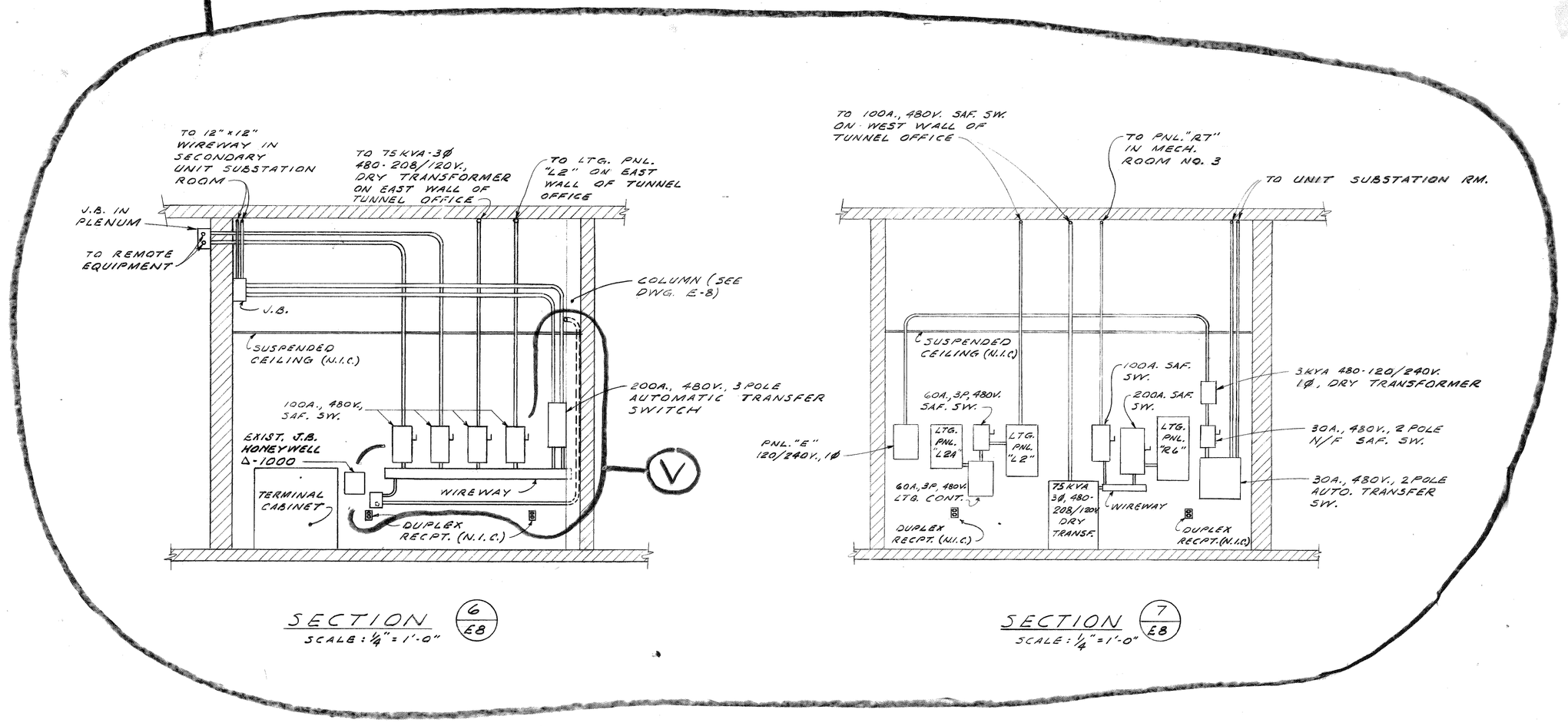

V	RELOCATED CITY MASTER F.A. BOX	SS	11/13/79
R	MOVED LT. SW. TO AGREE WITH AS BUILT CONDITIONS	GW	11/13/79
Q	ADDED 2 CONDUITS	GW	11/13/79
N	SECTION "11" ADDED & SEC. 6 & 7 CORRECTED PER SHOP DWGS.	GW	11/13/79
	revisions	DWN.	APPD. DATE

date 8-11-75
designed M. BROWN
drawn SIMON
checked M. BROWN

approved
Milton T. Brown
ELECT. ENG'R.

CITY OF DETROIT
CITY ENGINEERING DEPARTMENT

ATWATER STREET RELOCATION
ATWATER TUNNEL

TYPE "D" FIXTURE & DETAILS

contract no. 07105A

sheet 72a **of** 81
drawing no: E-20

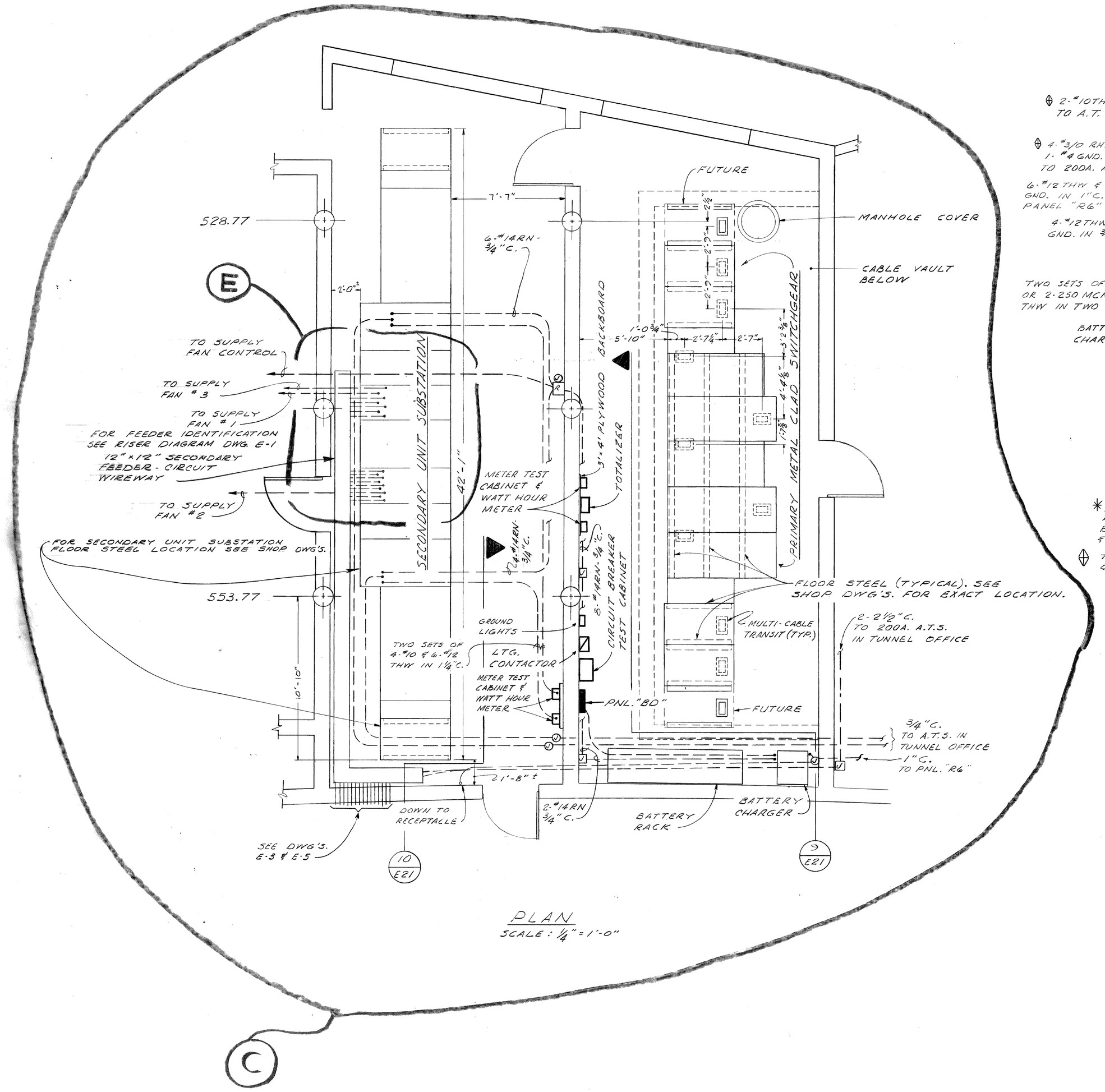

PLAN
SCALE: 1/4" = 1'-0"

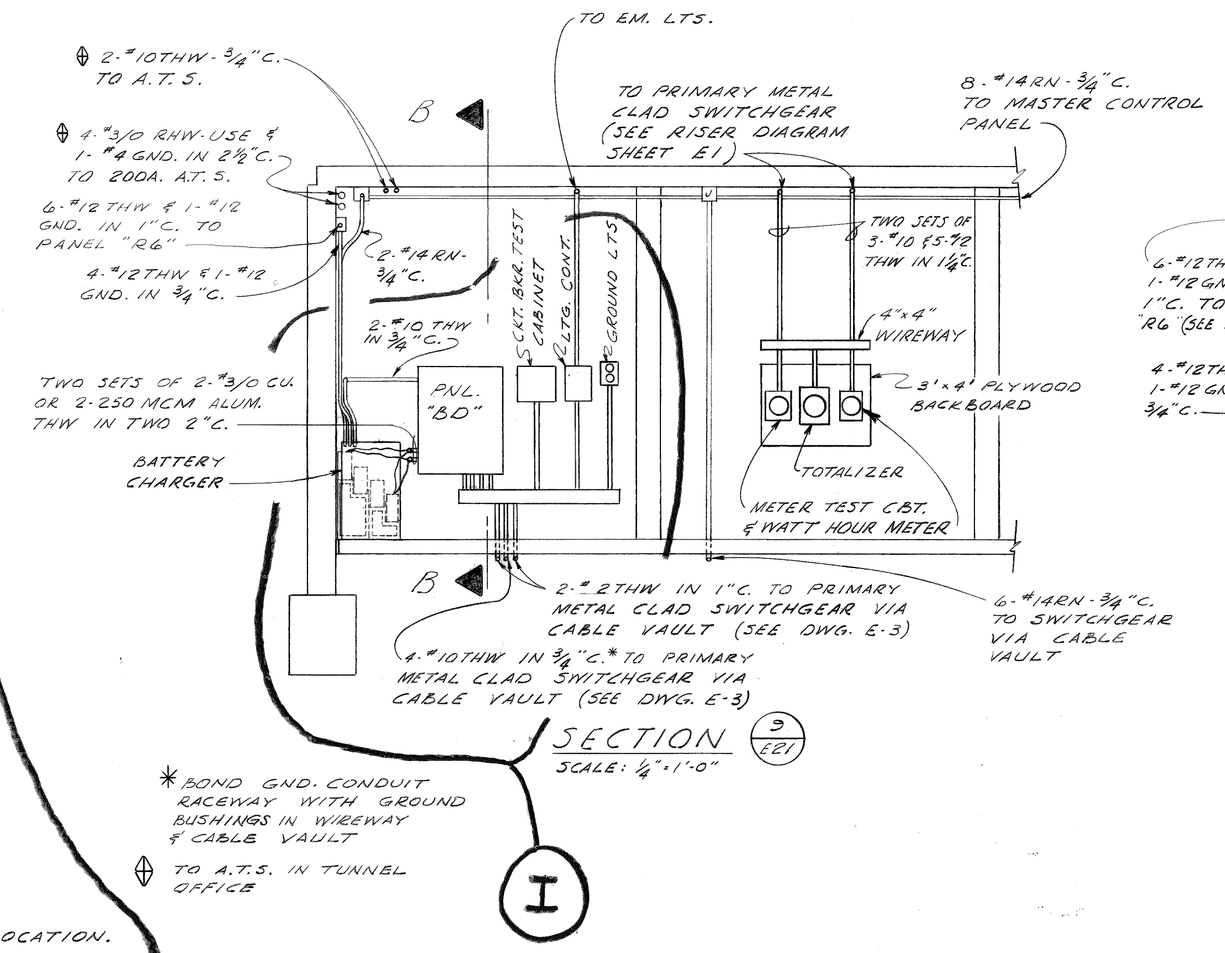

SECTION 9/E21
SCALE: 1/4" = 1'-0"

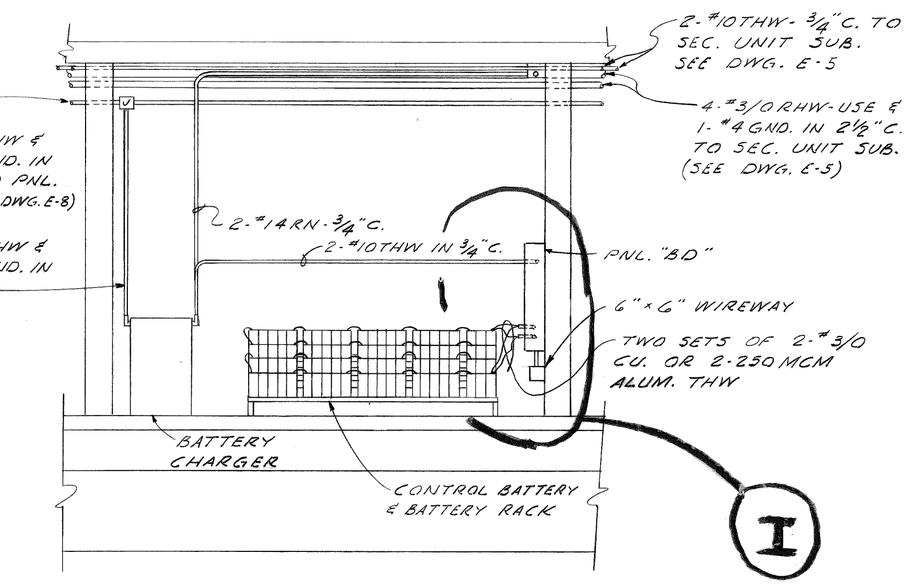

SECTION "B-B"
SCALE: 1/4" = 1'-0"

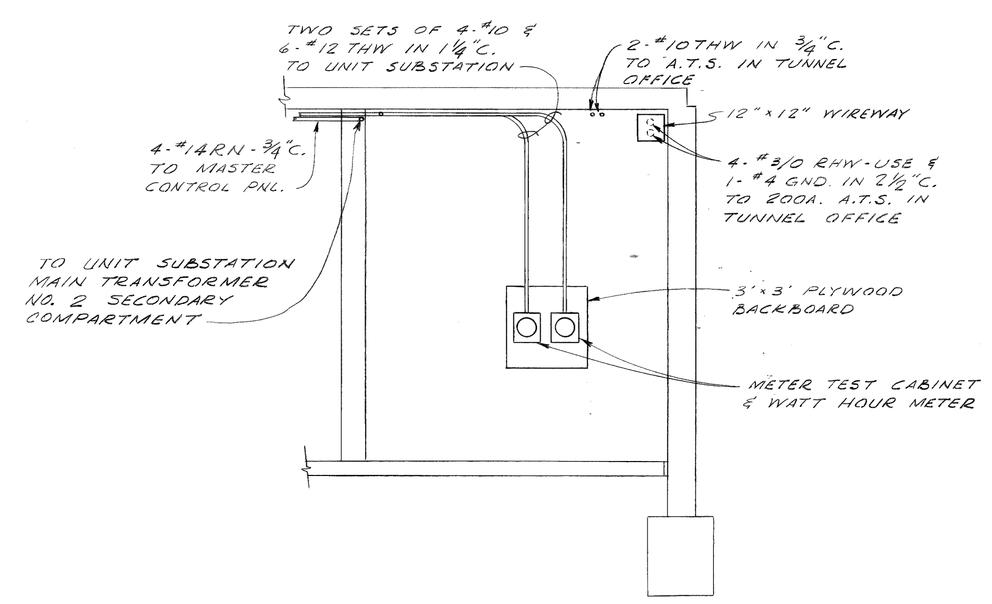

SECTION 10/E21
SCALE: 1/4" = 1'-0"

SUPPLEMENTARY DRAWING

revisions				
I	AS PER APPROVED SHOP DWGS.	GG	RB	MR
E.	EF-5 & 6 FEEDERS RELOCATED IN BUS FDR. UNIT FROM BUS TIE PER SHOP DWG.	GG	RB	MR
C	PLAN REVISED PER SHOP DWG. SUBMITTAL.	GG	RB	MR
		DWN.	C.H.D.	APPR.

date 10-27-75
designed M. Brown
drawn SIMON
checked M. Brown

approved Milton T. Brown
ELECT. ENGR.

CITY OF DETROIT
CITY ENGINEERING DEPARTMENT

ATWATER STREET RELOCATION
ATWATER TUNNEL

PRIMARY SWITCHGEAR AND DETAILS
SCALE AS NOTED

contract no. 07105 A

sheet 226 **of** 81
drawing no: E-21

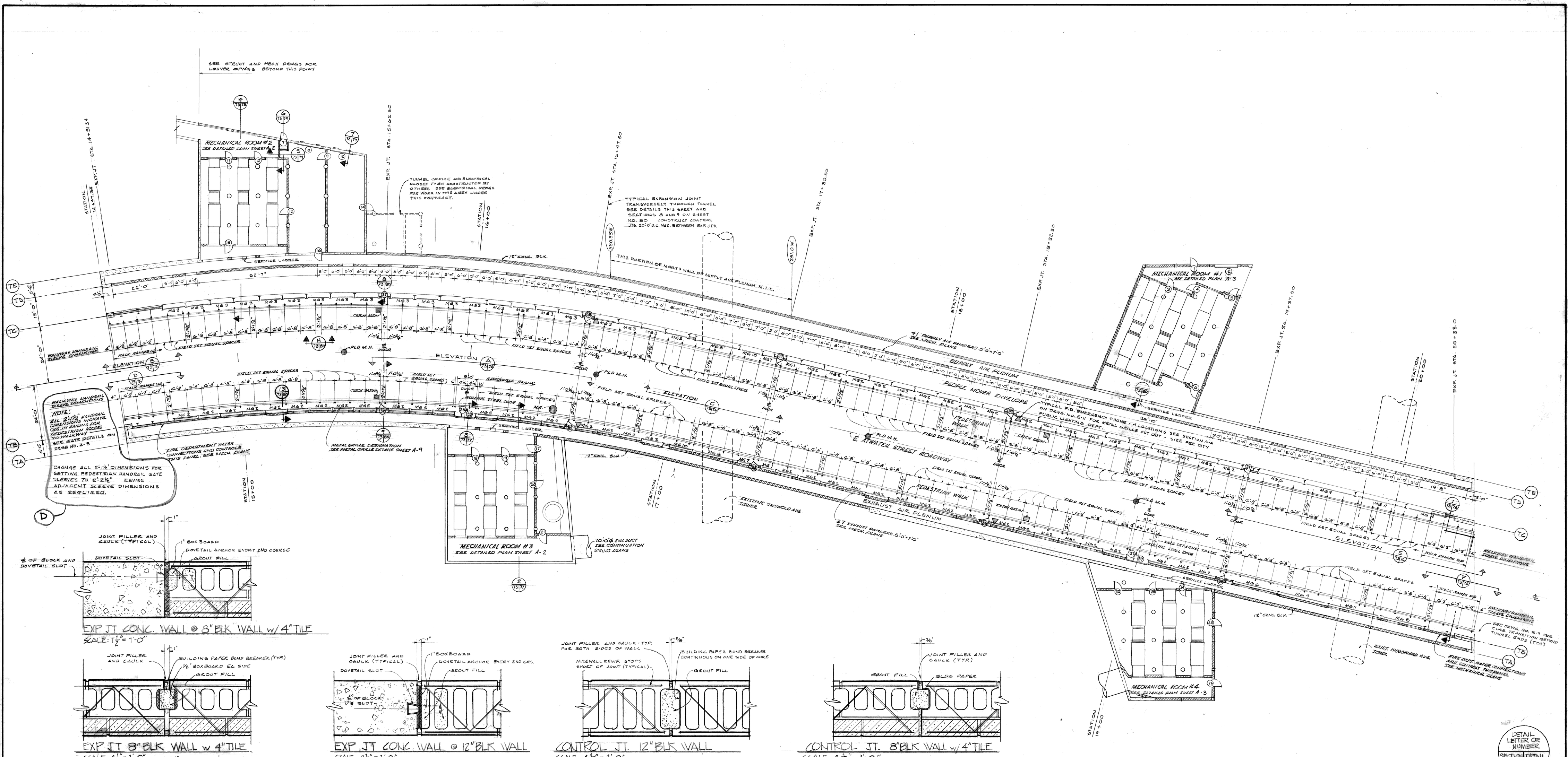

revisions		
D	Change Size of Pedestrian Handrail & Sleeves	

date 8-11-75
designed L.W. KLEI
drawn L.T.H., C.W.
checked

approved

CITY OF DETROIT
CITY ENGINEERING DEPARTMENT

ATWATER STREET RELOCATION
ATWATER TUNNEL

TUNNEL FLOOR PLAN

contract no. 07105 A

sheet 73 of 81
drawing no: A1

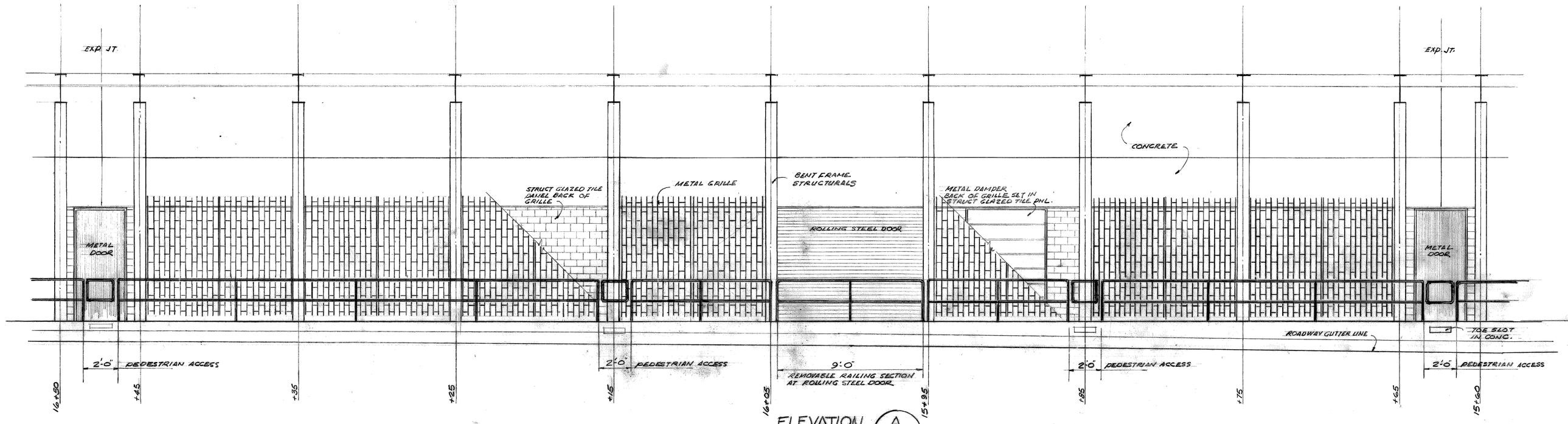

ELEVATION A
SCALE 1/4" = 1'-0" 73/76

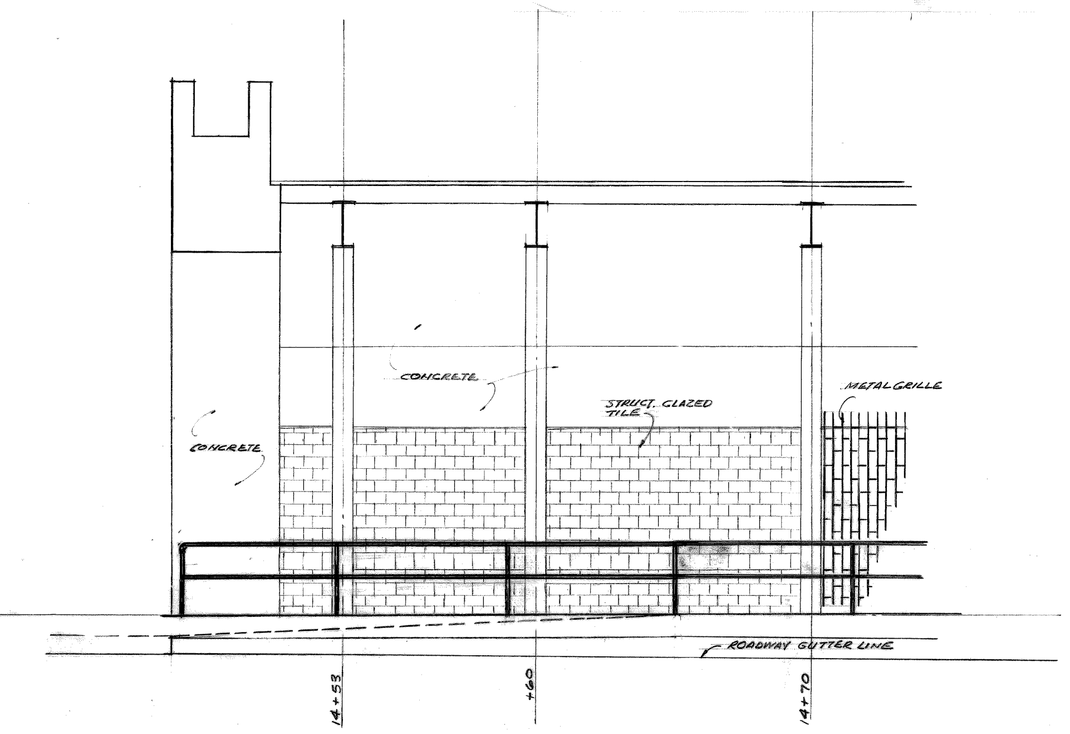

ELEVATION B
SCALE 1/4" = 1'-0" 73/76

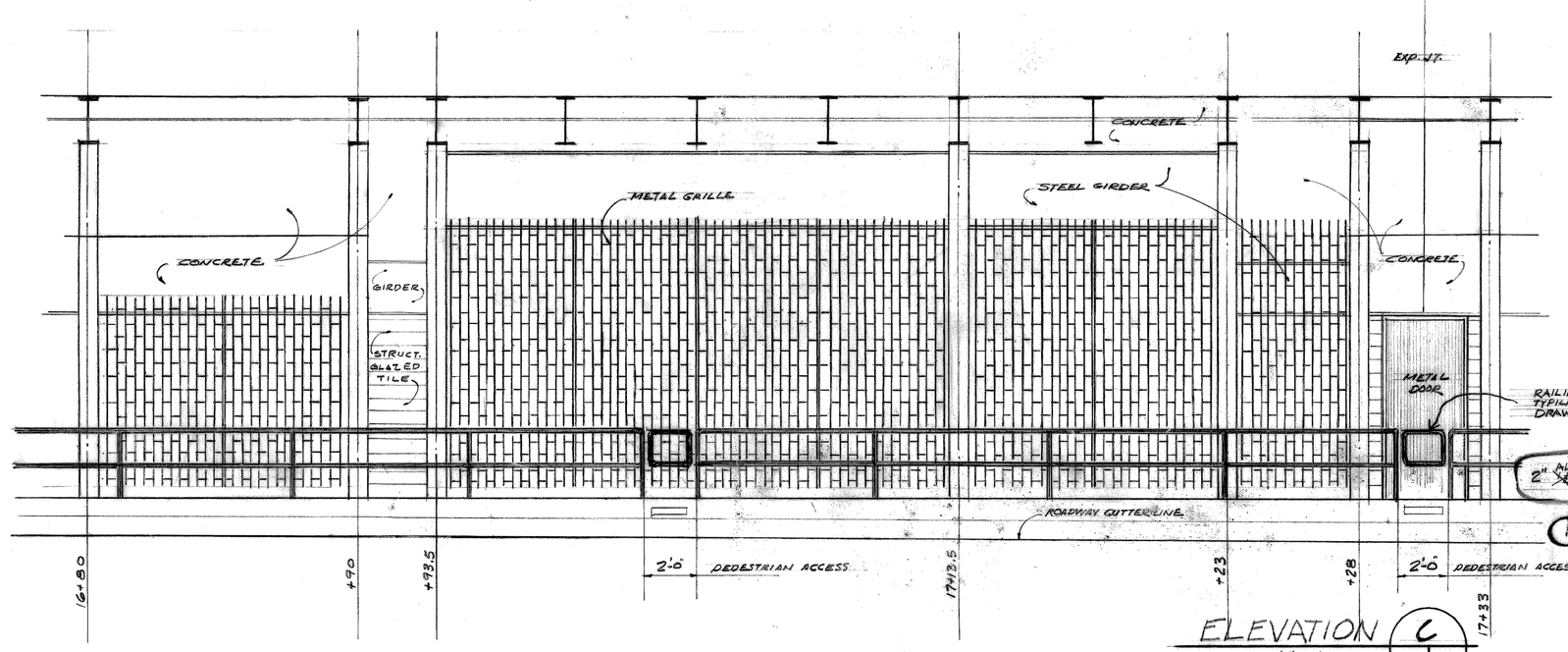

ELEVATION C
SCALE 1/4" = 1'-0" 73/76

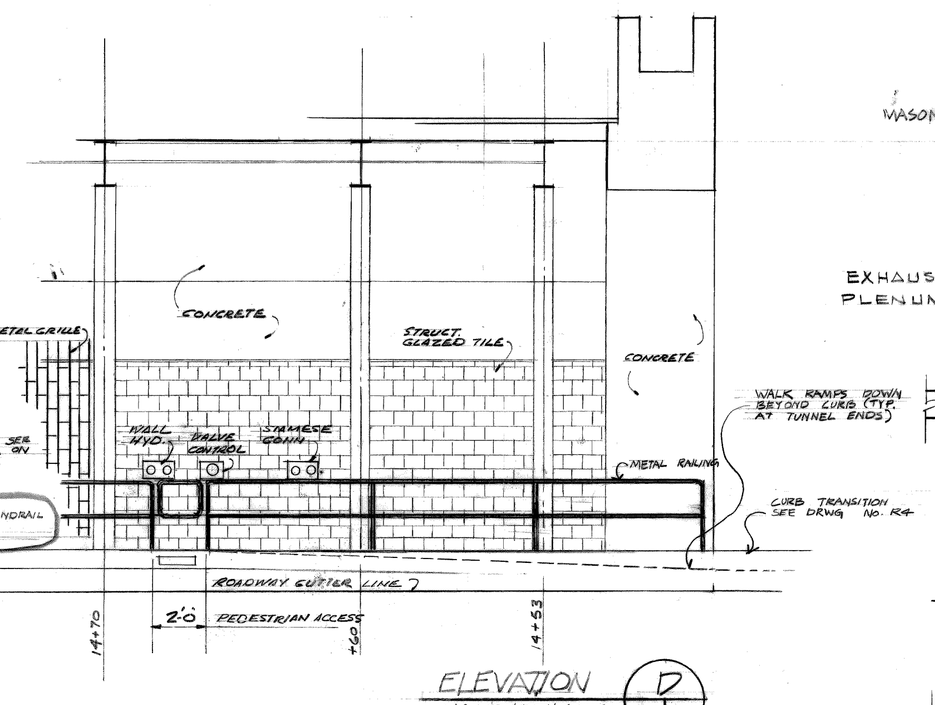

ELEVATION D
SCALE 1/4" = 1'-0" 73/76

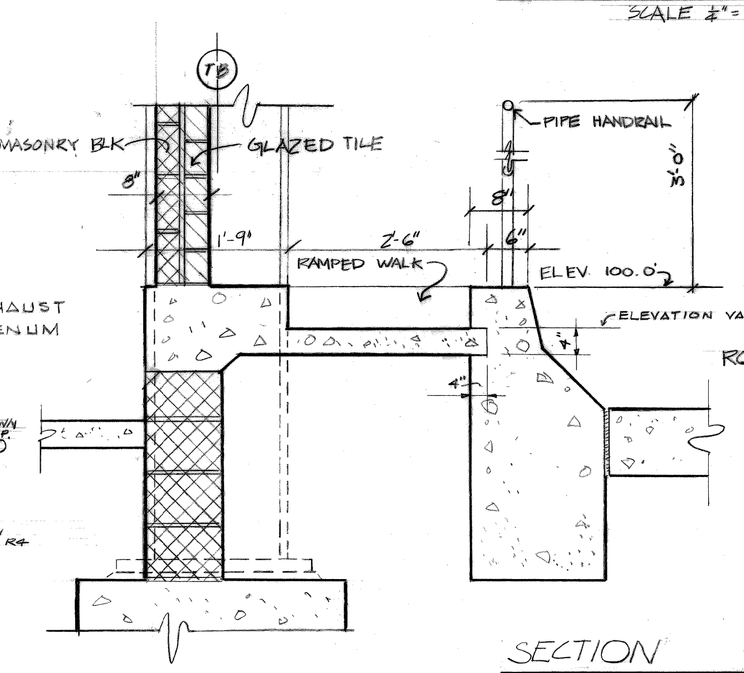

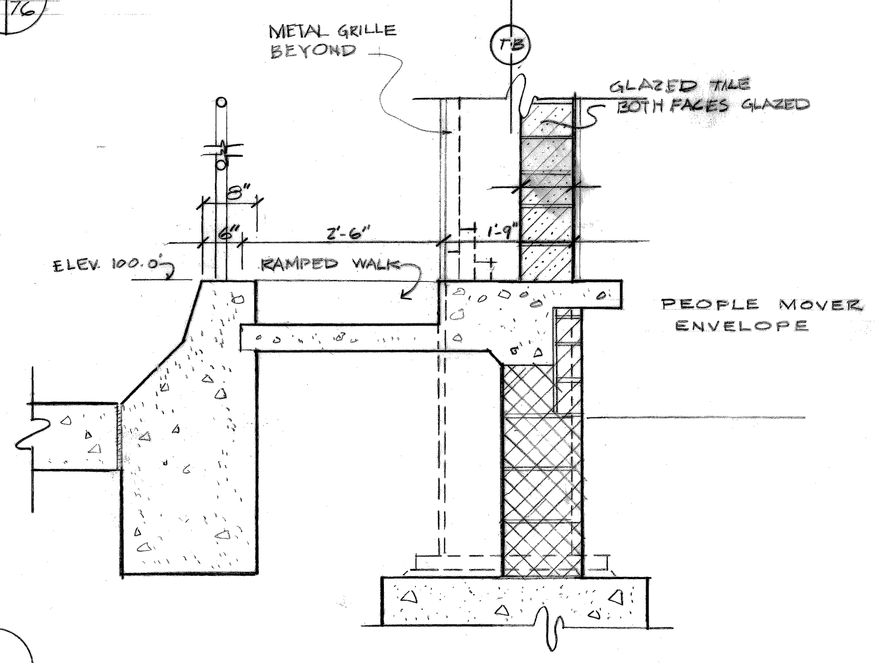

SECTION 1
SCALE 1 1/2" = 1'-0" 73/76

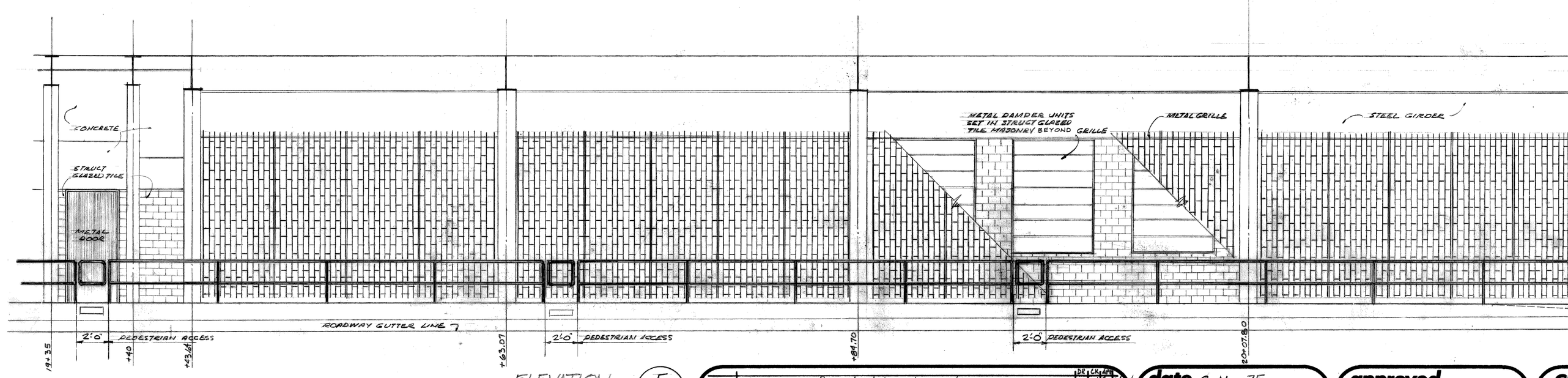

ELEVATION E
SCALE 1/4" = 1'-0" 73/76

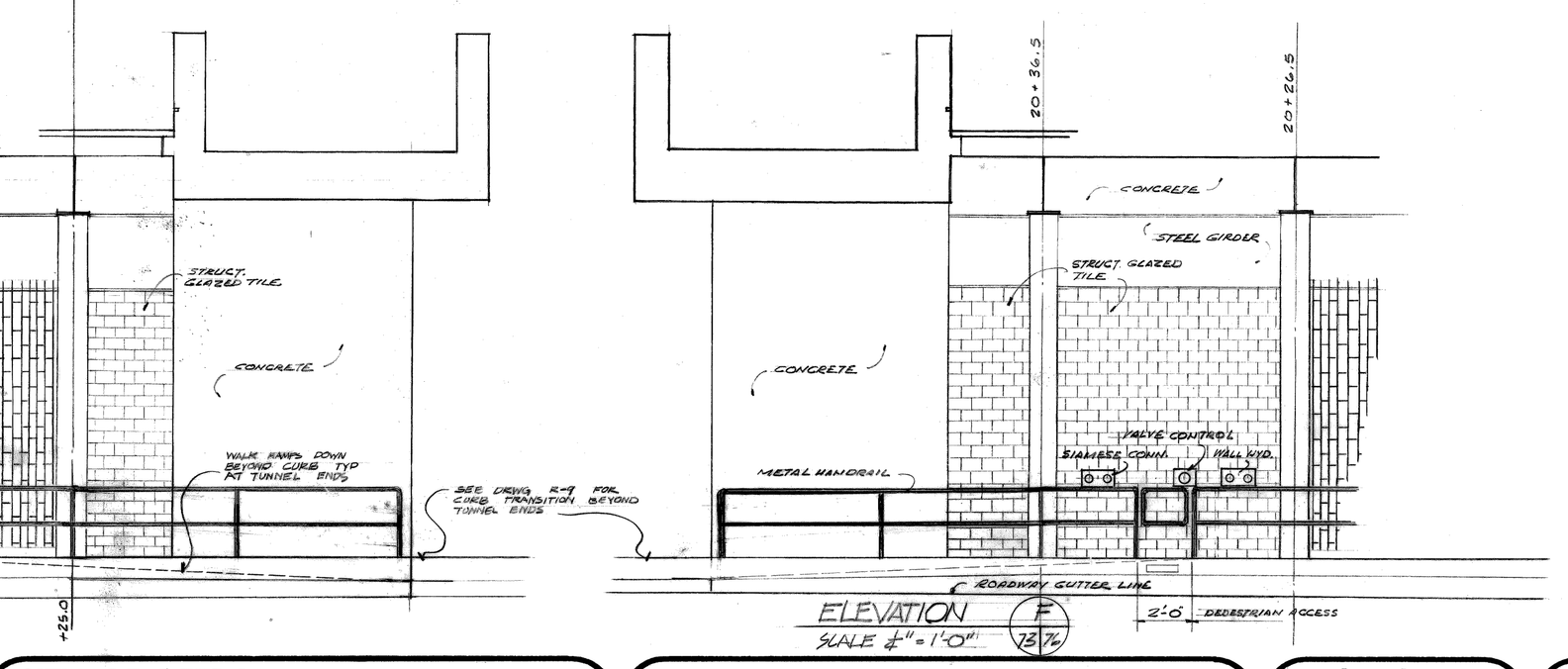

ELEVATION F
SCALE 1/4" = 1'-0" 73/76

DETAIL LETTER OR NUMBER | SECTION LINE | DETAIL SHOWN | SHT. No. | SH. No.

revisions	
D	Change Size of Pedestrian Handrail

date	8-11-75
designed	L.W. KLEI
drawn	L.W.K. C.W.
checked	

approved

CITY OF DETROIT
CITY ENGINEERING DEPARTMENT

ATWATER STREET RELOCATION
ATWATER TUNNEL

TUNNEL ELEVATIONS

contract no. 07105 A

sheet 76 of 81
drawing no: A 4

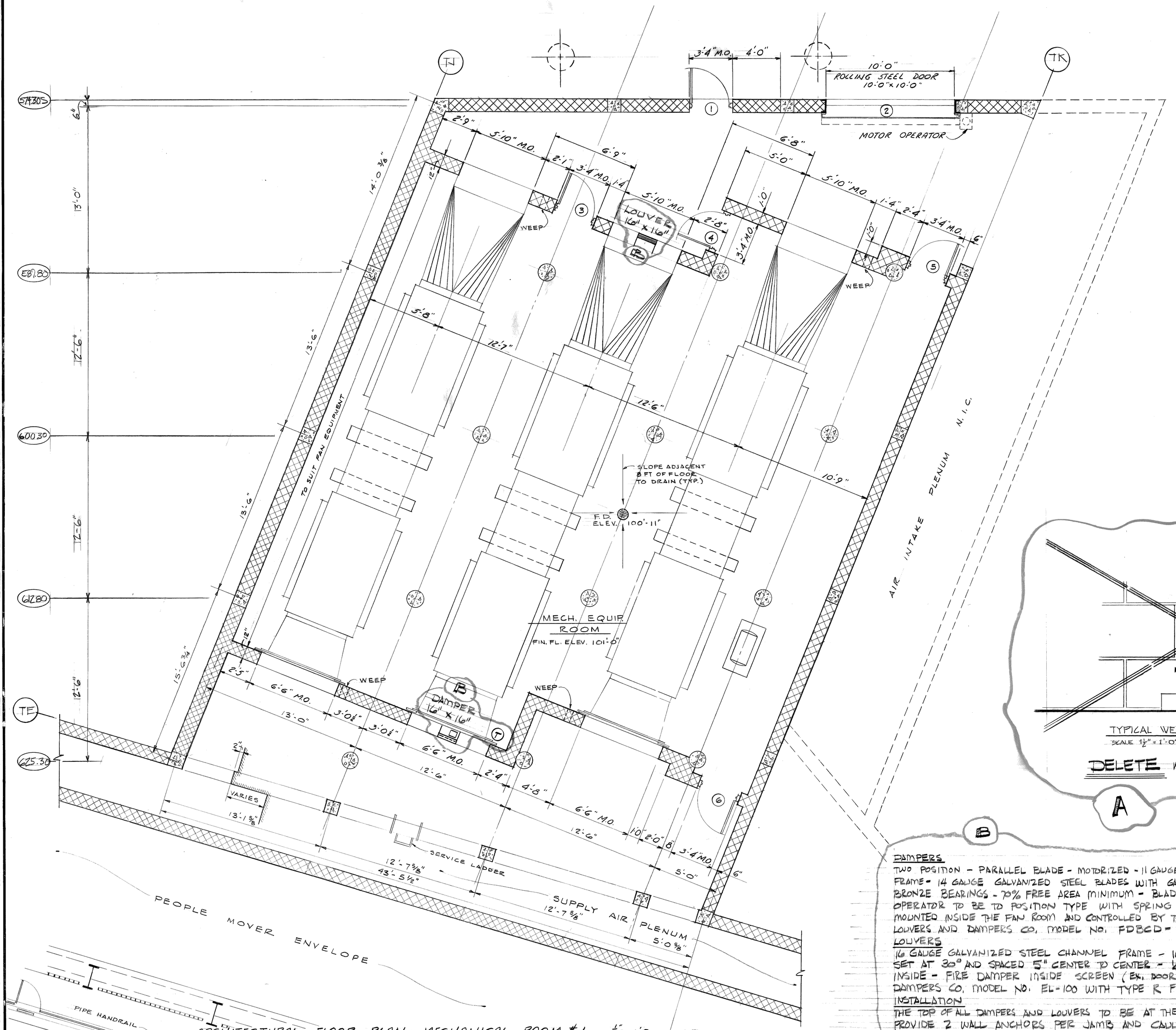

ARCHITECTURAL FLOOR PLAN - MECHANICAL ROOM # 1 1/4" = 1'-0"

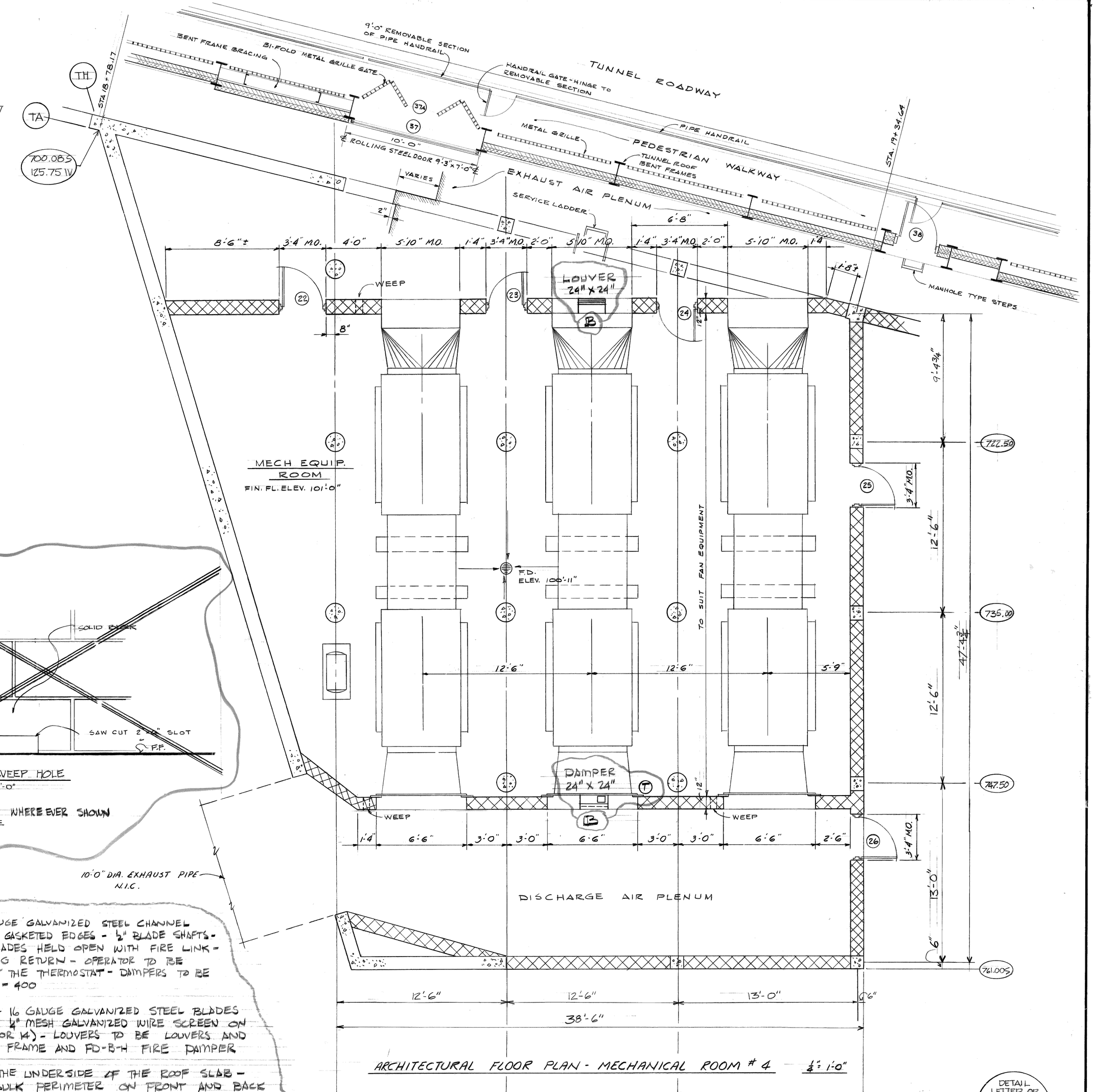

ARCHITECTURAL FLOOR PLAN - MECHANICAL ROOM # 4 1/4" = 1'-0"

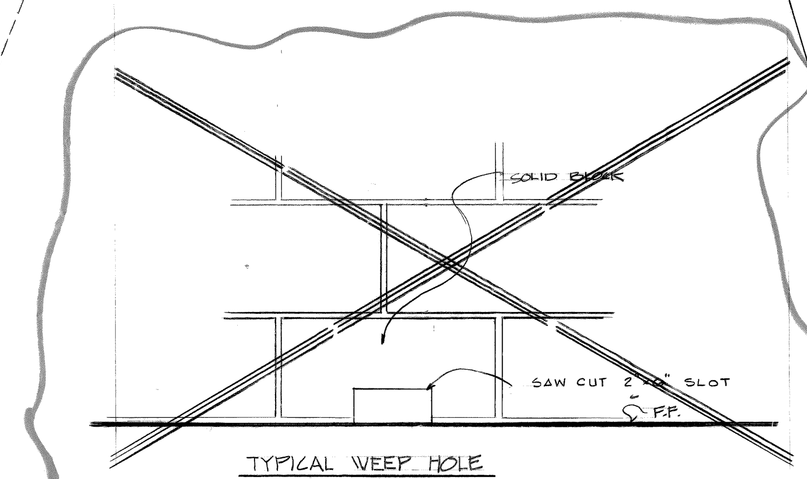

TYPICAL WEEP HOLE
SCALE 12" = 1'-0"

DELETE WHERE EVER SHOWN

A

10'-0" DIA. EXHAUST PIPE N.I.C.

B

DAMPERS
TWO POSITION - PARALLEL BLADE - MOTORIZED - 11 GAUGE GALVANIZED STEEL CHANNEL FRAME - 14 GAUGE GALVANIZED STEEL BLADES WITH GASKETED EDGES - 1/2" BLADE SHAFTS - BRONZE BEARINGS - 70% FREE AREA MINIMUM - BLADES HELD OPEN WITH FIRE LINK - OPERATOR TO BE TO POSITION TYPE WITH SPRING RETURN - OPERATOR TO BE MOUNTED INSIDE THE FAN ROOM AND CONTROLLED BY THE THERMOSTAT - DAMPERS TO BE LOUVERS AND DAMPERS CO. MODEL NO. FDBCD - 400

LOUVERS
16 GAUGE GALVANIZED STEEL CHANNEL FRAME - 16 GAUGE GALVANIZED STEEL BLADES SET AT 30° AND SPACED 5" CENTER TO CENTER - 1/4" MESH GALVANIZED WIRE SCREEN ON INSIDE - FIRE DAMPER INSIDE SCREEN (EX. DOOR 14) - LOUVERS TO BE LOUVERS AND DAMPERS CO. MODEL NO. EL-100 WITH TYPE R FRAME AND FD-B-H FIRE DAMPER

INSTALLATION
THE TOP OF ALL DAMPERS AND LOUVERS TO BE AT THE UNDERSIDE OF THE ROOF SLAB - PROVIDE 2 WALL ANCHORS PER JAMB AND CAULK PERIMETER ON FRONT AND BACK FACE - MOUNT THERMOSTATS 5'-0" ABOVE FLOOR

ELECTRICAL
T — THERMOSTAT — TO PANEL
M — OPERATOR
R-5 IN FAN ROOM 1
R-6 IN FAN ROOM 2
R-7 IN FAN ROOM 3
R-8 IN FAN ROOM 4
R-6 IN UNIT SUB. ROOM
R-7 IN FIRE EQUIP. ROOM

OPERATION
DAMPERS OPEN ON TEMPERATURE RISE AND CLOSE ON TEMPERATURE FALL

DETAIL LETTER OR NUMBER
SECTION LINE SHEET NO. | DETAIL SHOWN SHEET NO.

revisions	
6-1-76	B	LOUVERS AND DAMPERS ADDED
6-1-76	A	WEEPHOLES DELETED

date	8-11-75
designed	L.W. KLEI
drawn	CCW
checked	
approved	

CITY OF DETROIT
CITY ENGINEERING DEPARTMENT

ATWATER STREET RELOCATION
ATWATER TUNNEL

FLOOR PLANS
MECHANICAL ROOMS 1 & 4

contract no. 07105 A

sheet 75 of 81
drawing no: A 3

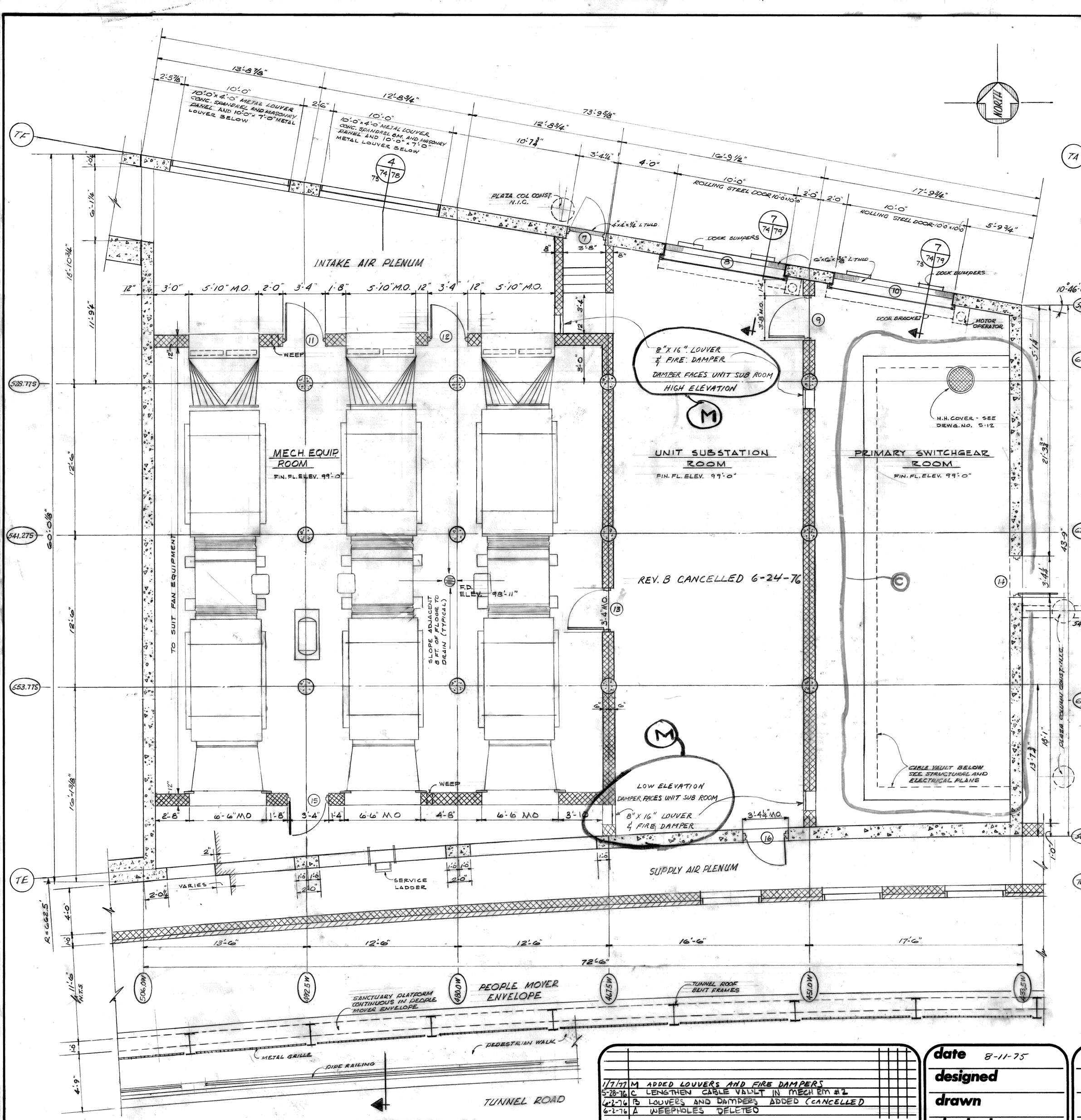

ARCHITECTURAL FLOOR PLAN - MECHANICAL ROOM #2 1/4"=1'-0"

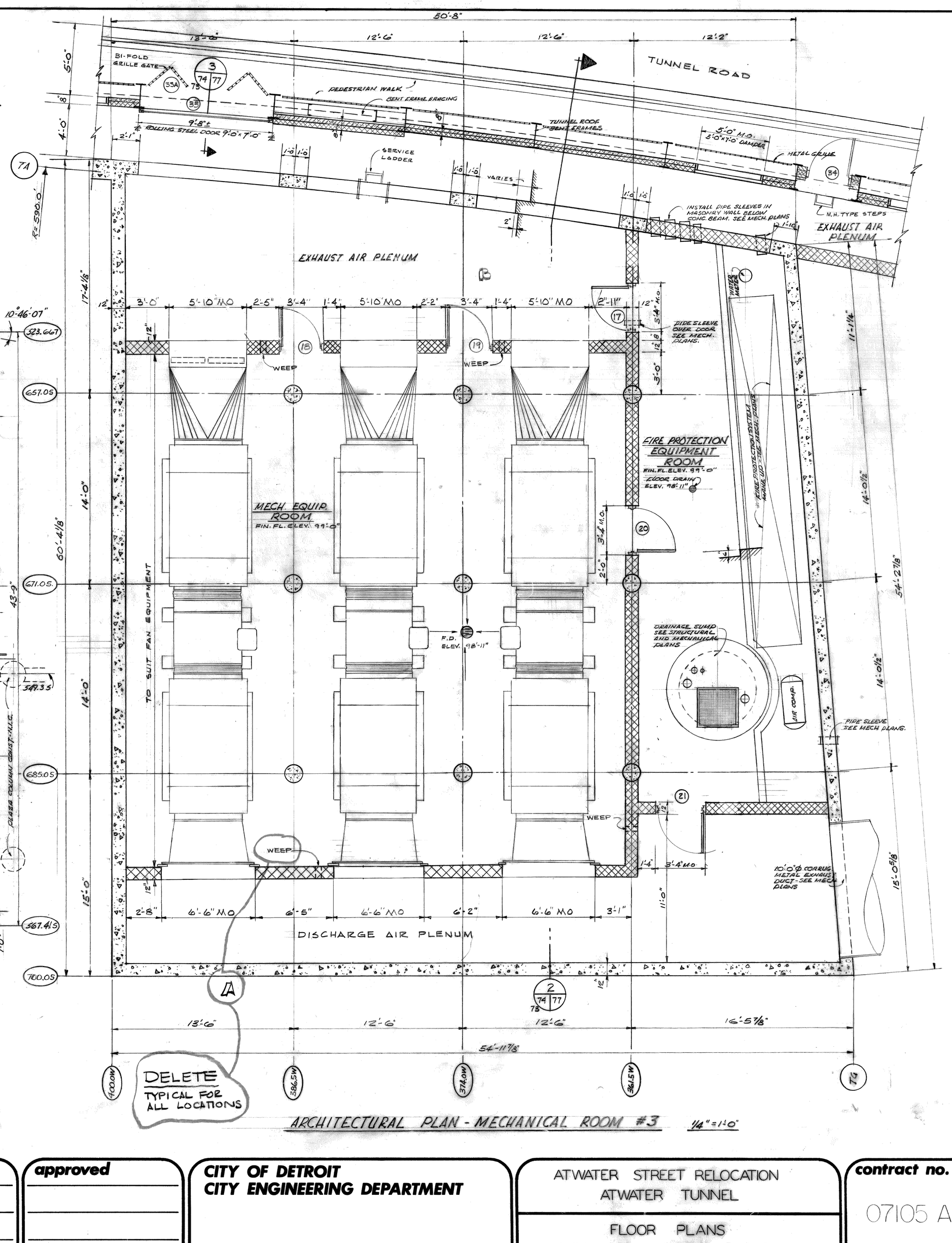

ARCHITECTURAL PLAN - MECHANICAL ROOM #3 1/4"=1'-0"

1/7/77	M	ADDED LOUVERS AND FIRE DAMPERS
5-28-76	C	LENGTHEN CABLE VAULT IN MECH RM #2
6-2-76	B	LOUVERS AND DAMPERS ADDED (CANCELLED
6-2-76	A	WEEPHOLES DELETED

revisions

date 8-11-75
designed
drawn
checked

approved

CITY OF DETROIT
CITY ENGINEERING DEPARTMENT

ATWATER STREET RELOCATION
ATWATER TUNNEL

FLOOR PLANS
MECHANICAL ROOMS 2 & 3

contract no. 07105 A

sheet 74 of 81
drawing no: A 2

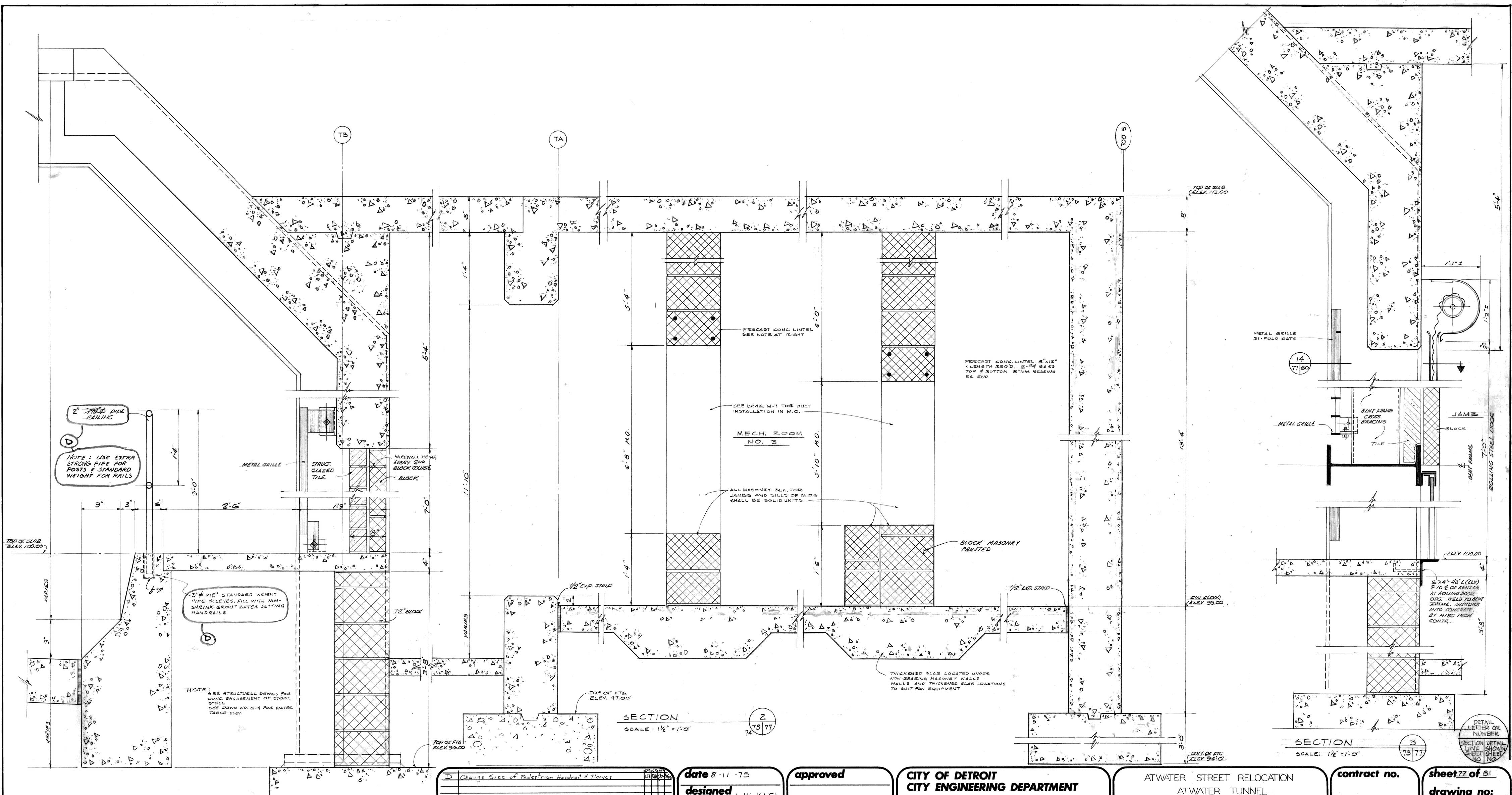

revisions		
D	Change Size of Pedestrian Handrail & Sleeves	DRAWN / CHECKED

date 8-11-75
designed L.W. KLEI
drawn LWK. L.T.H.
checked

approved

CITY OF DETROIT
CITY ENGINEERING DEPARTMENT

ATWATER STREET RELOCATION
ATWATER TUNNEL

SECTION – MECHANICAL ROOM NO. 3

contract no. 07105 A

sheet 77 **of** 81
drawing no: A 5

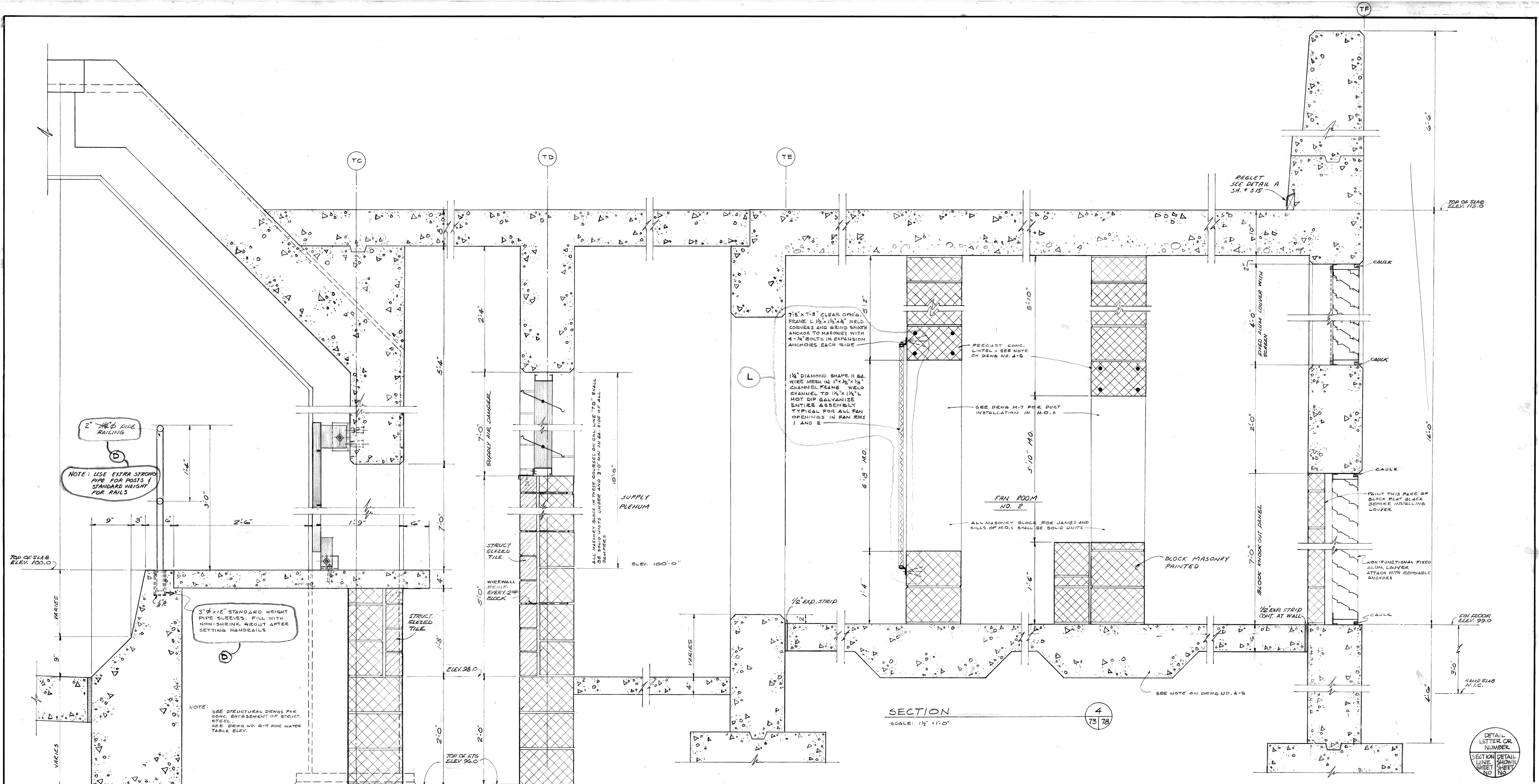

D	Change Size of Pedestrian Handrail & Sleeves	LT	TH	8-8-75	
L	Add Protective Wire Mesh Screens	LH	TH	8-8-75	

revisions

date 8-11-75
designed L.W. KLEI
drawn L.W.K. LT.H.
checked

approved

CITY OF DETROIT
CITY ENGINEERING DEPARTMENT

ATWATER STREET RELOCATION
ATWATER TUNNEL

SECTION-MECHANICAL ROOM NO. 2

contract no. 07105 A

sheet 78 **of** 81
drawing no: A 6

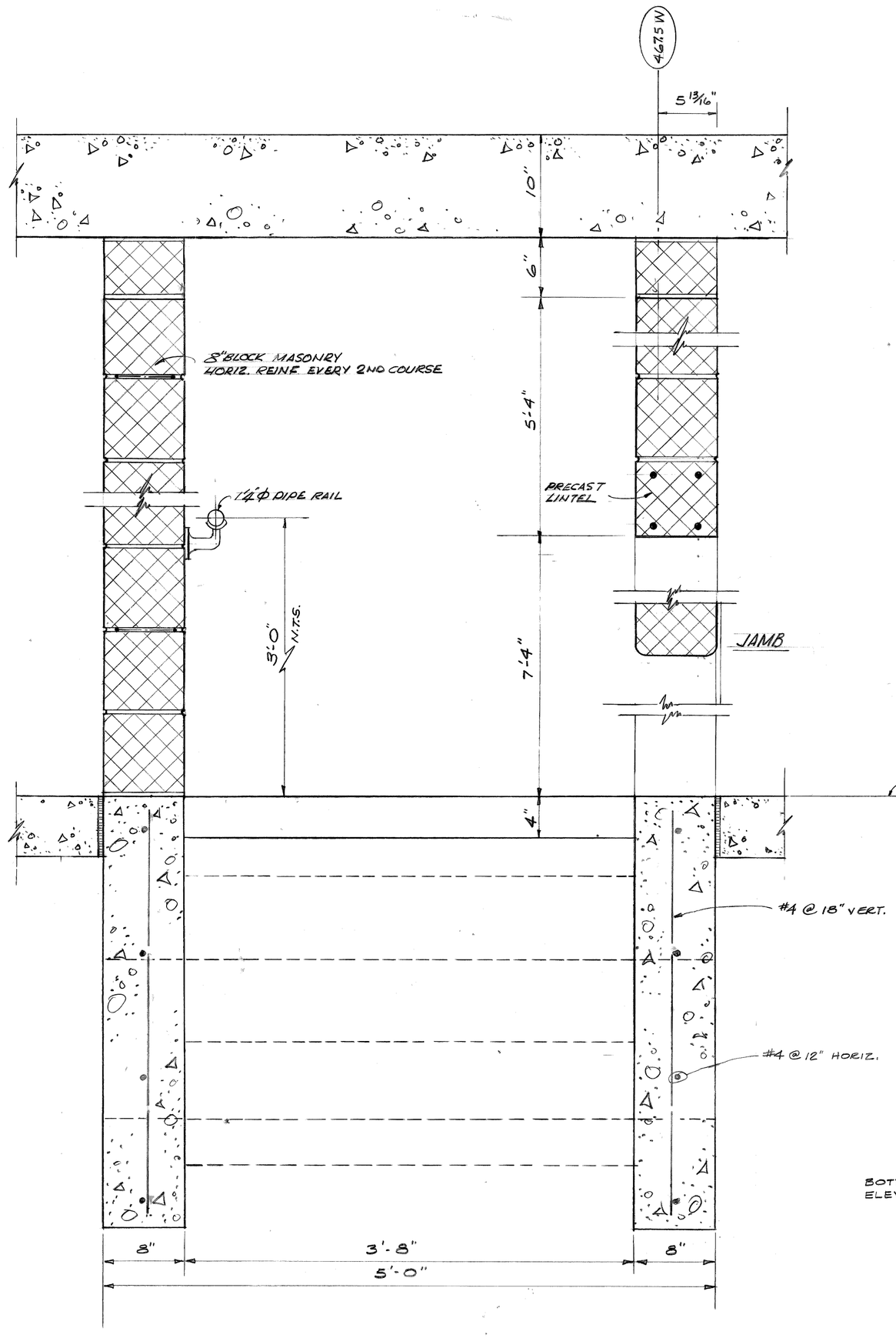

SECTION 5 (73/79)
SCALE: 1½" = 1'-0"

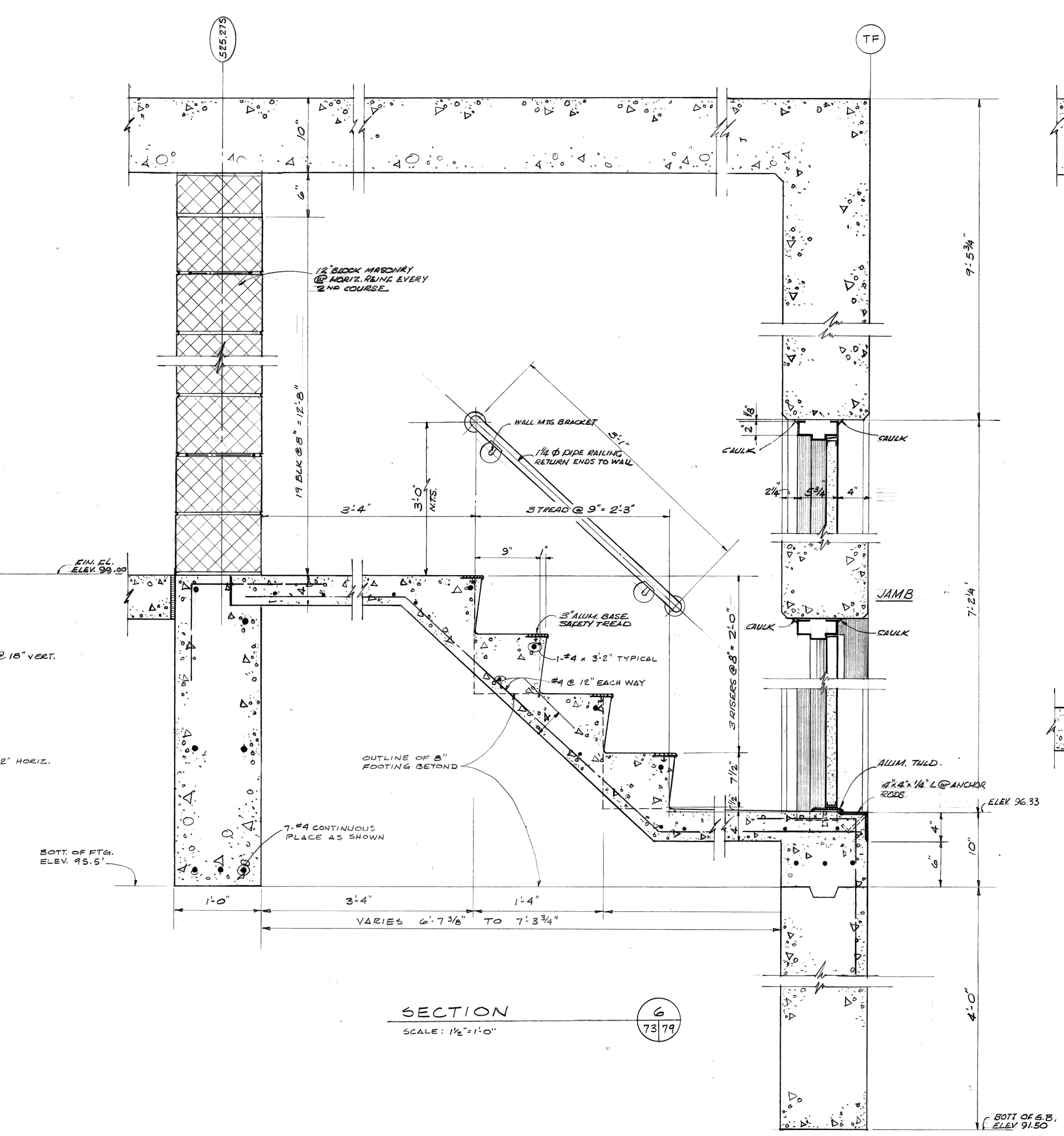

SECTION 6 (73/79)
SCALE: 1½" = 1'-0"

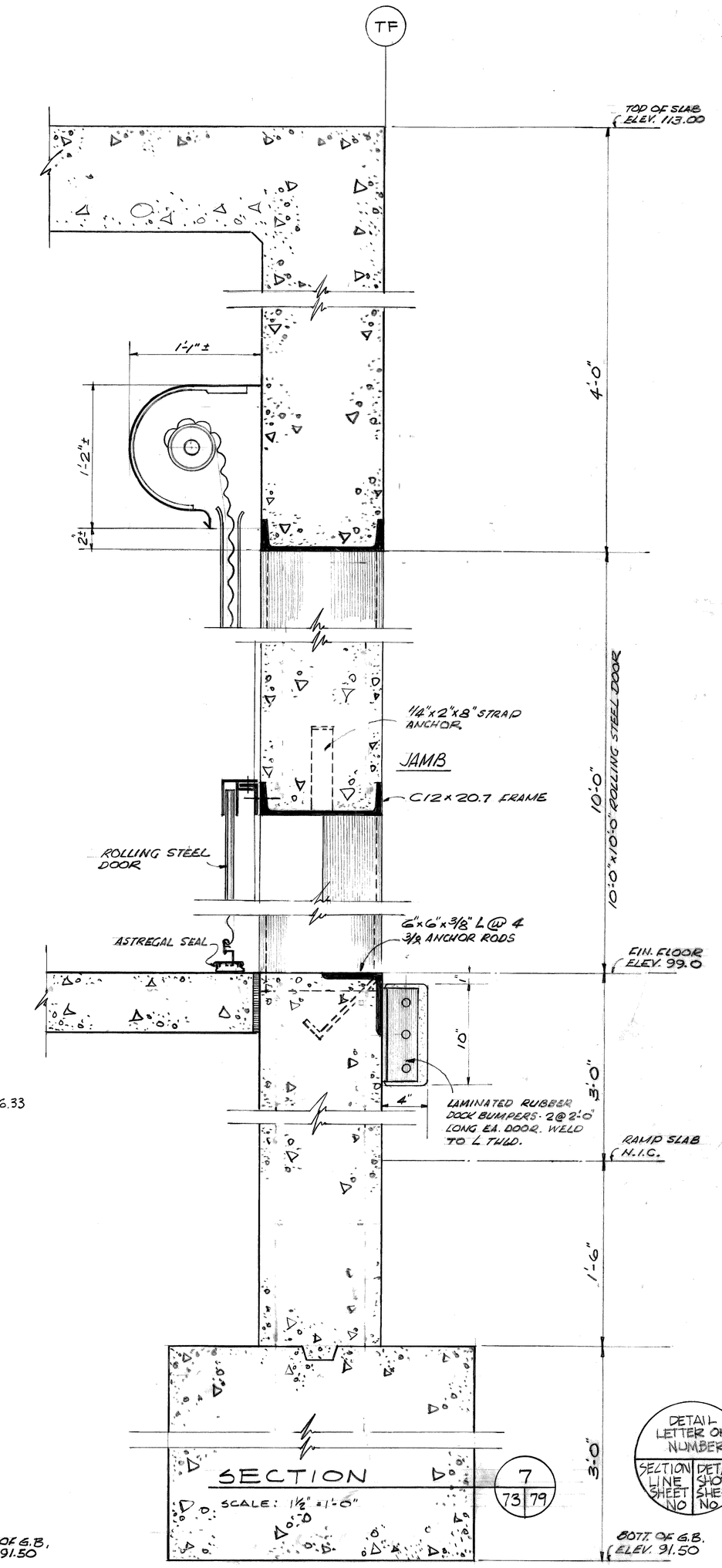

SECTION 7 (73/79)
SCALE: 1½" = 1'-0"

DETAIL LETTER OR NUMBER | SECTION LINE SHEET NO | DETAIL SHOWN SHEET NO

revisions	date 8-11-75 designed L.W. KLEI drawn L.W. KLEI checked	approved	CITY OF DETROIT CITY ENGINEERING DEPARTMENT	ATWATER STREET RELOCATION ATWATER TUNNEL SECTIONS	contract no. 07105 A	sheet 79 of 81 drawing no: A 7

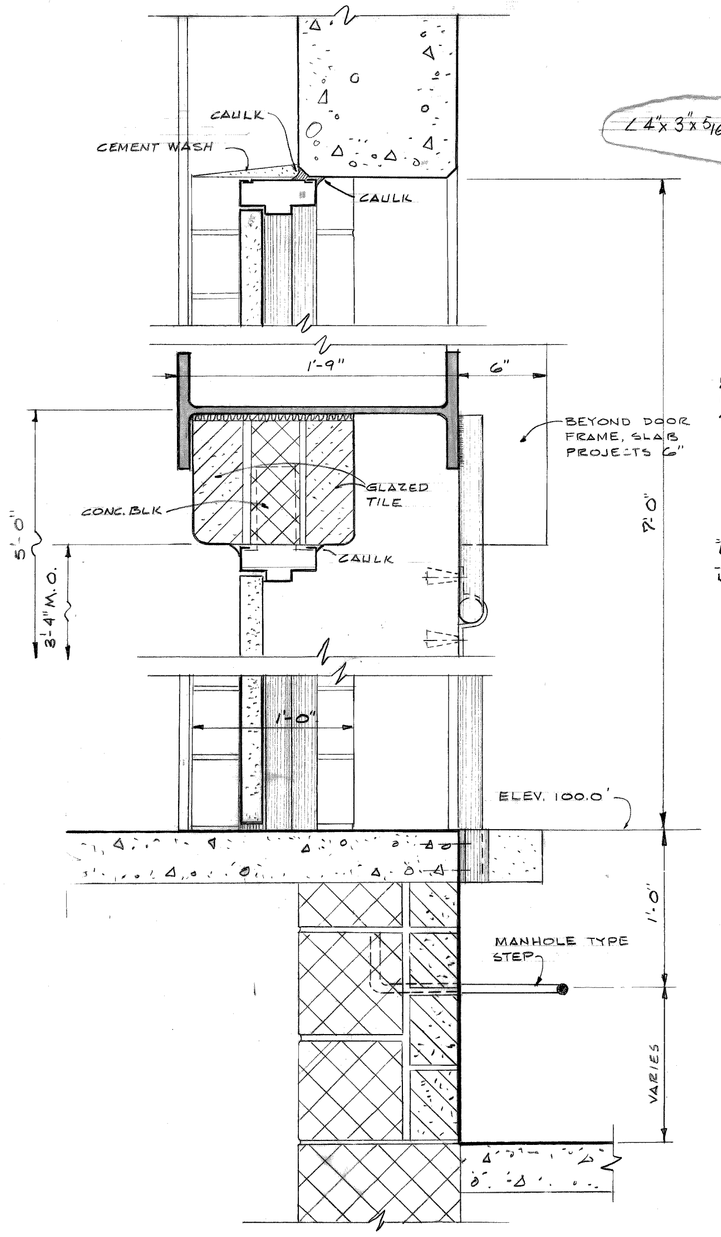

SECTION 8 (73|80)
SCALE: 1½" = 1'-0"
TYPICAL FOR ALL DOORS AT PEOPLE MOVER ENVELOPE

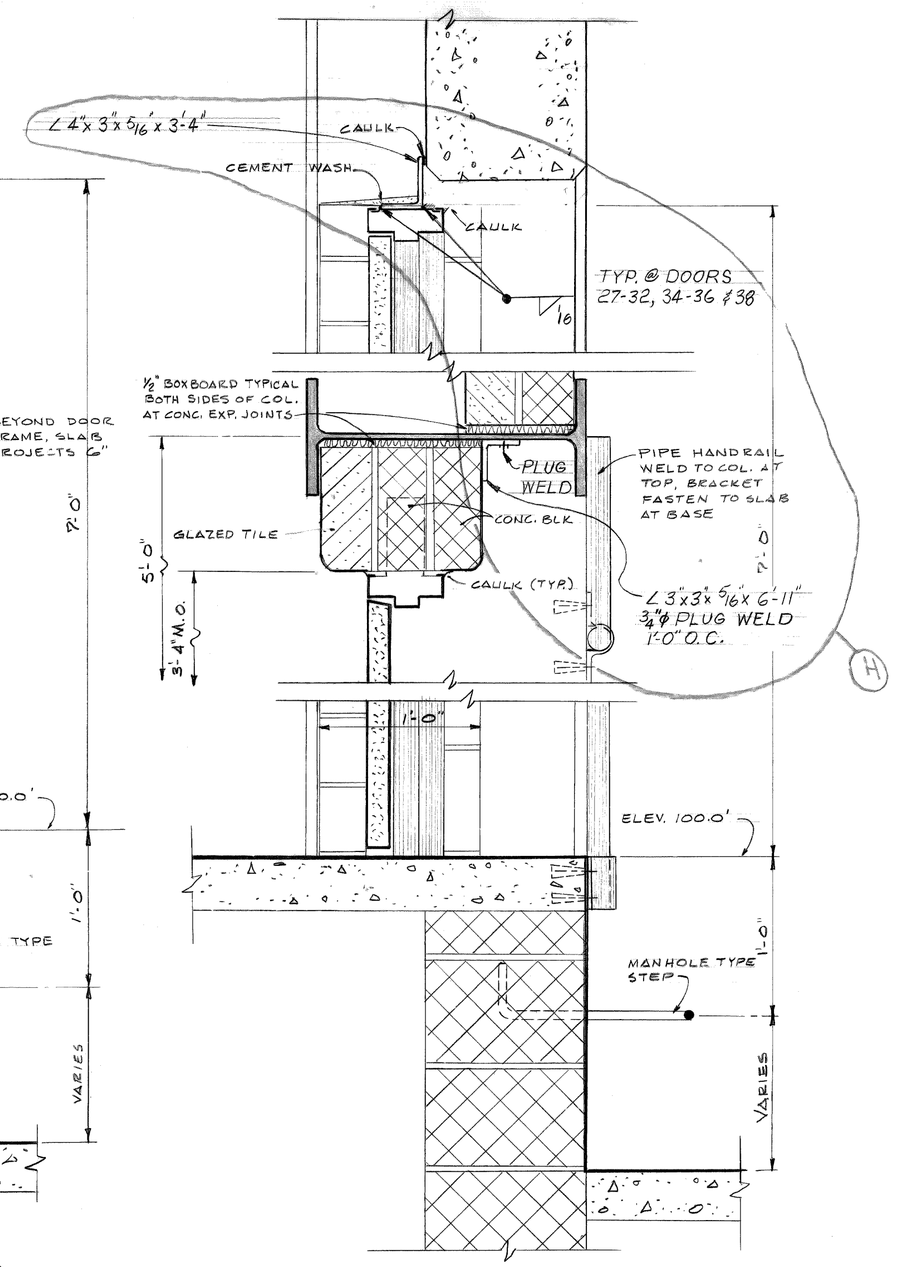

SECTION 9 (73|80)
SCALE: 1½" = 1'-0"
TYPICAL FOR ALL DOORS AT EXHAUST AIR PLENUM

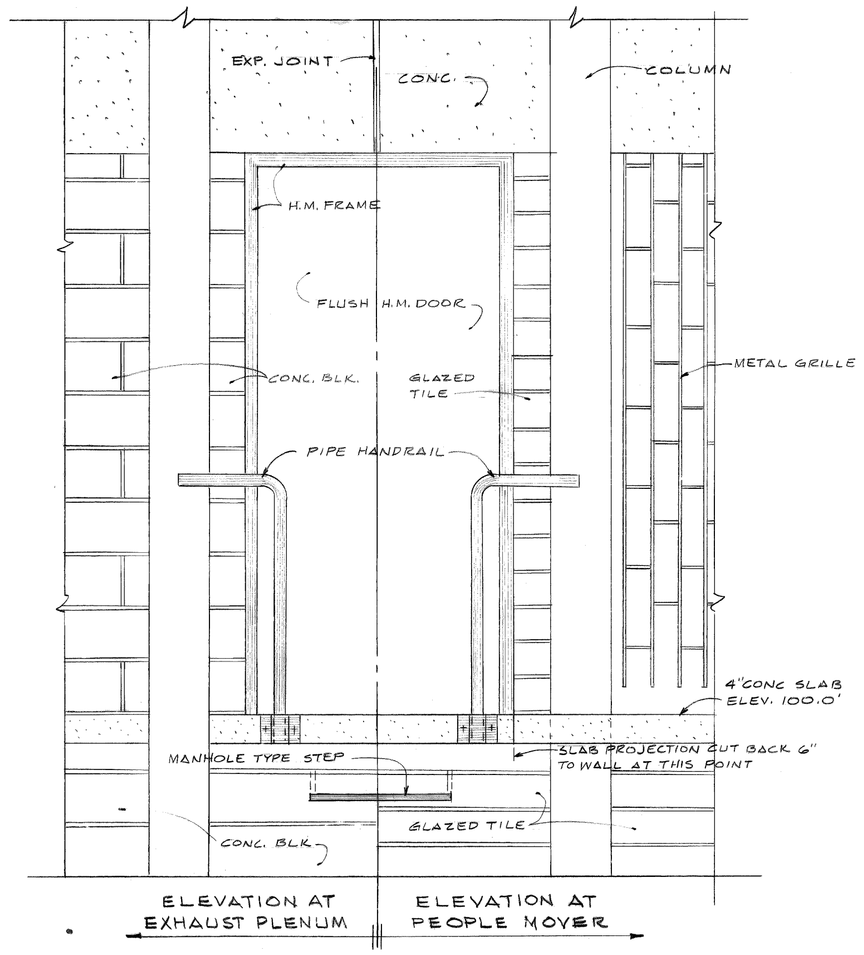

ELEVATION G (80|80)
SCALE: ¾" = 1'-0"

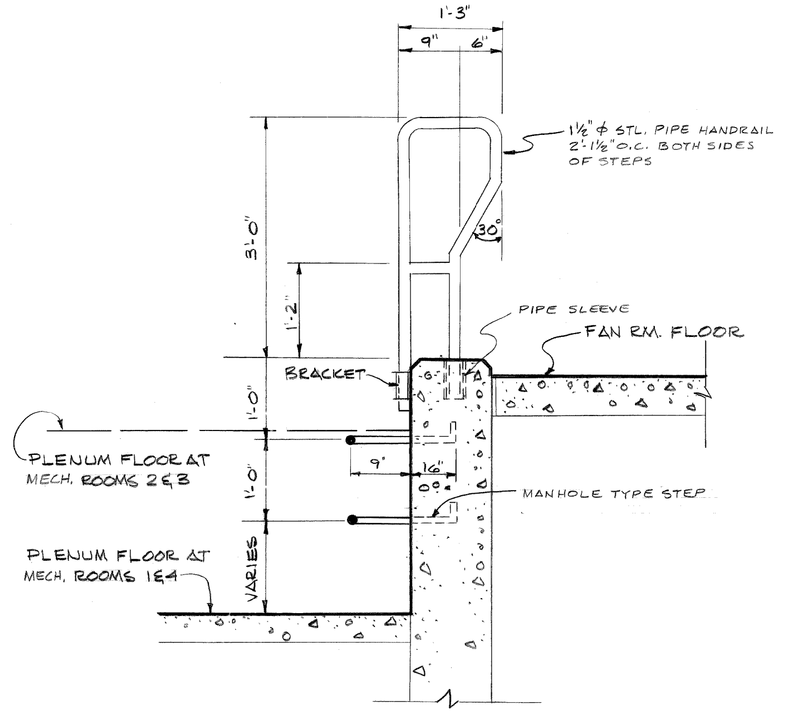

SECTION 10 (73|80)
SCALE: ¾" = 1'-0"
TYPICAL AT ALL FAN ROOMS

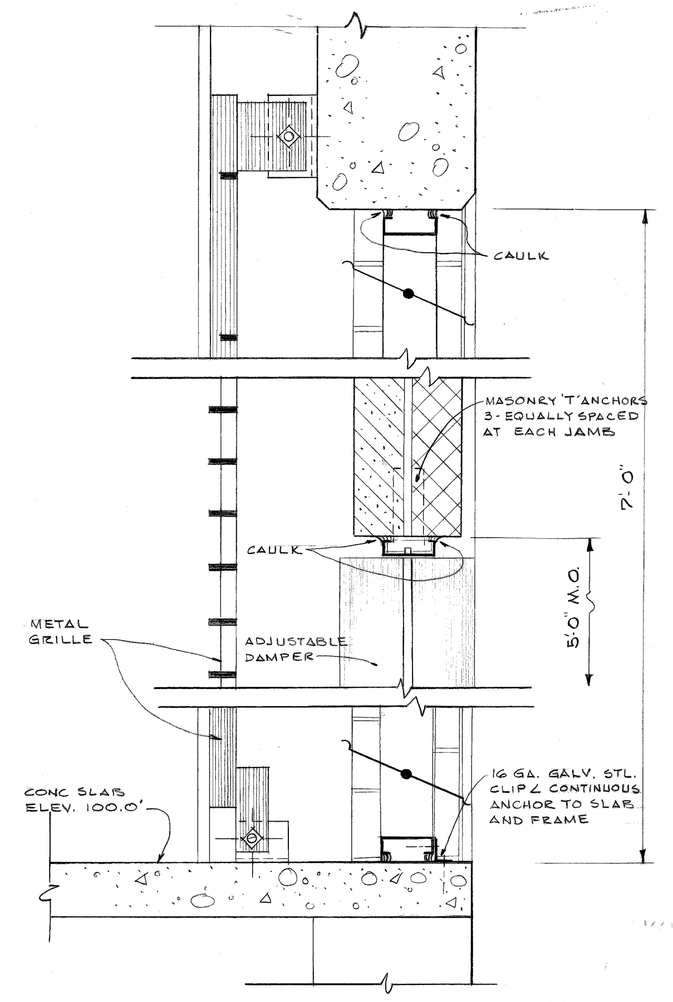

SECTION 11 (73|80)
SCALE: 1½" = 1'-0"

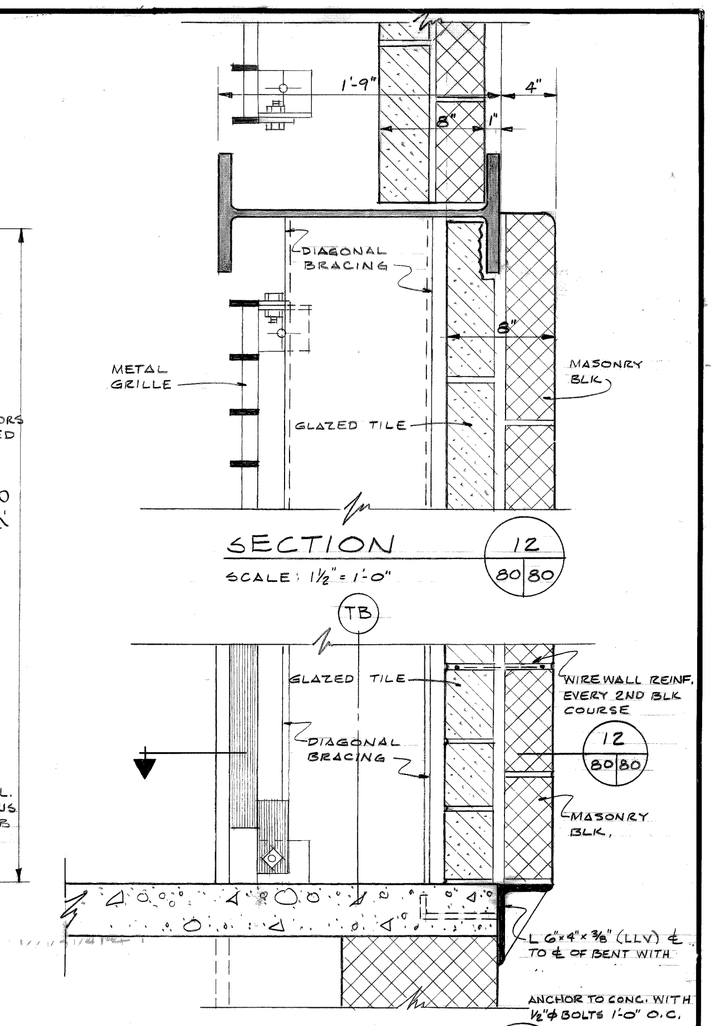

SECTION 12 (80|80)
SCALE: 1½" = 1'-0"

SECTION 13 (73|80)
SCALE: 1½" = 1'-0"

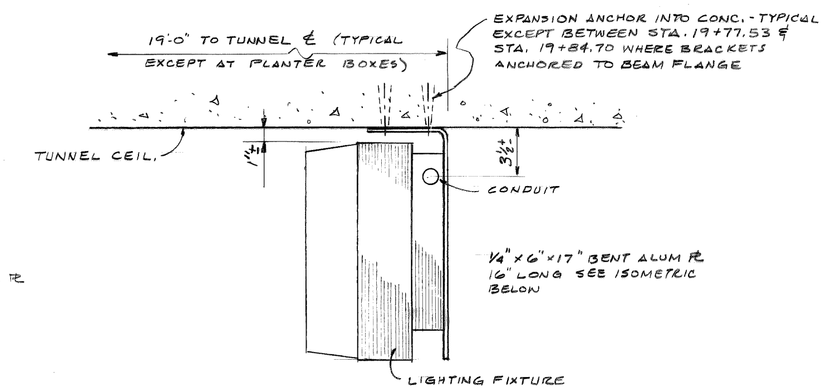

LIGHTING FIXTURE SUPPORT BRACKET DETAIL
1½" = 1'-0"

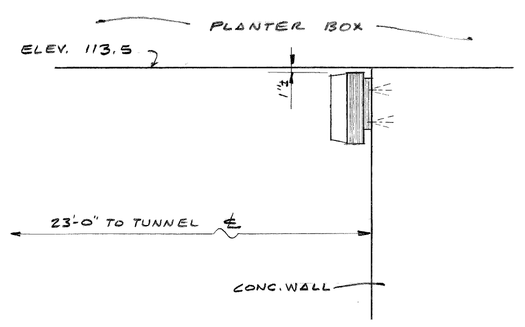

LIGHTING FIXTURE AT PLANTER BOXES
½" = 1'-0"

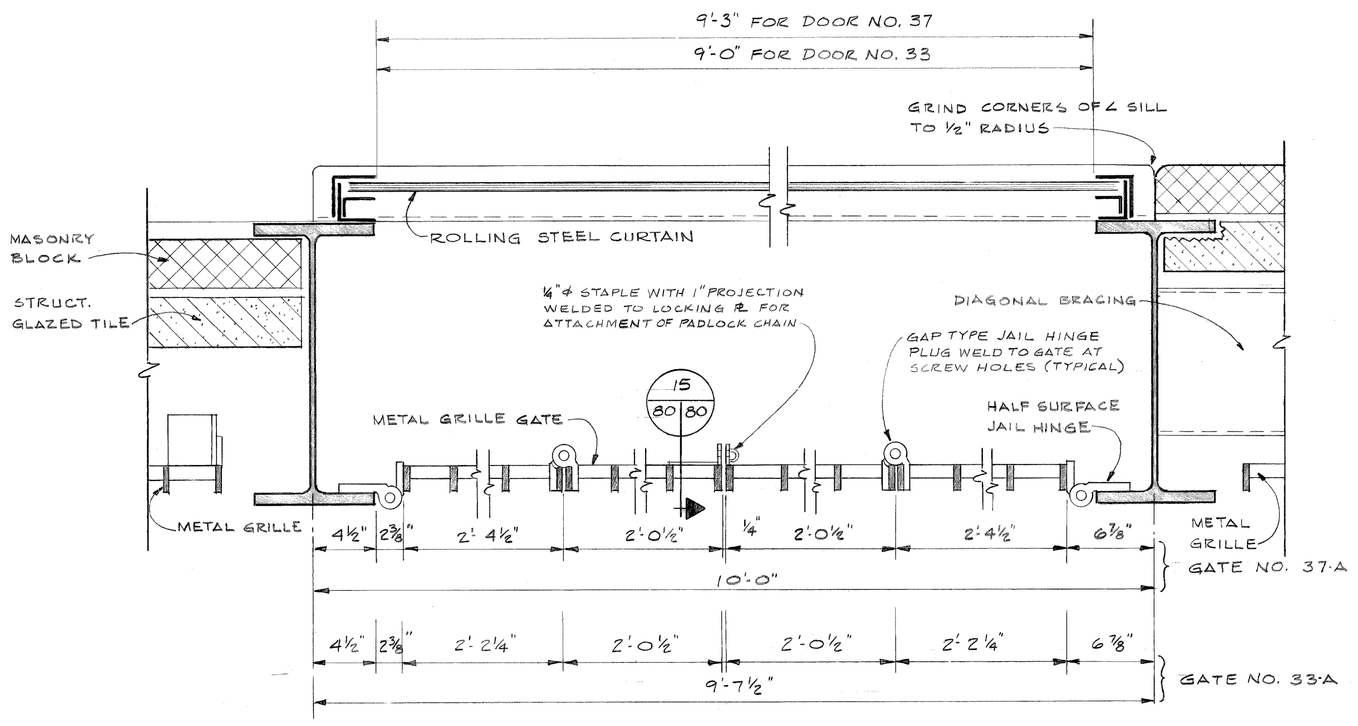

SECTION 14 (77|80)
SCALE: 1½" = 1'-0"

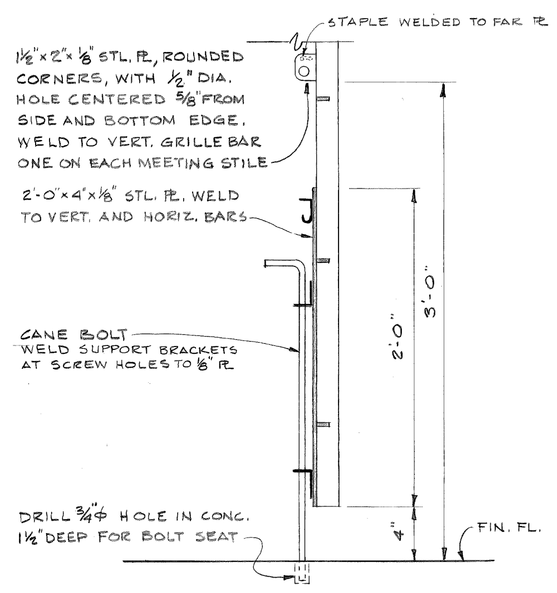

SECTION 15 (80|80)
SCALE: 1½" = 1'-0"

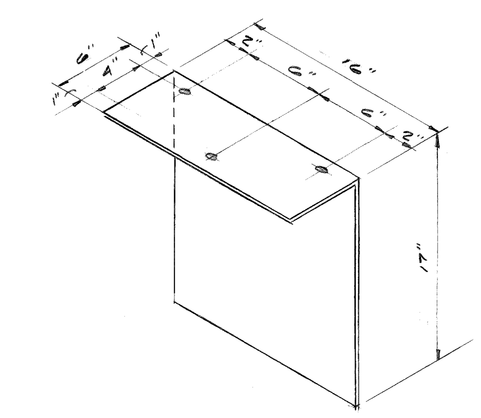

SUPPORT BRACKET ISOMETRIC
1½" = 1'-0"

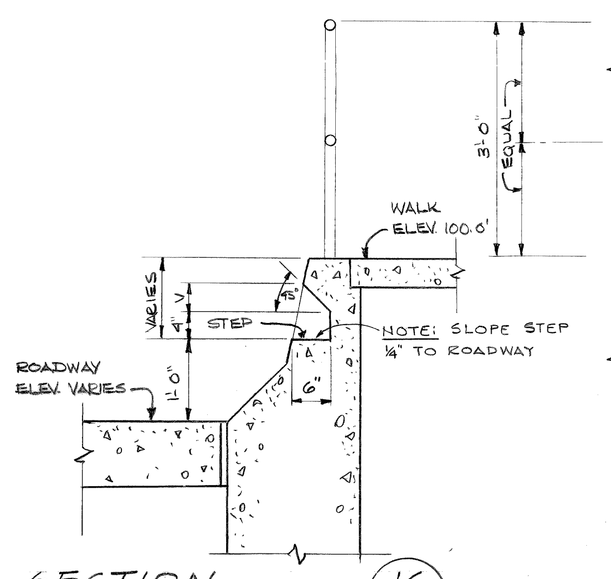

SECTION 16 (80|80)
SCALE: ¾" = 1'-0"

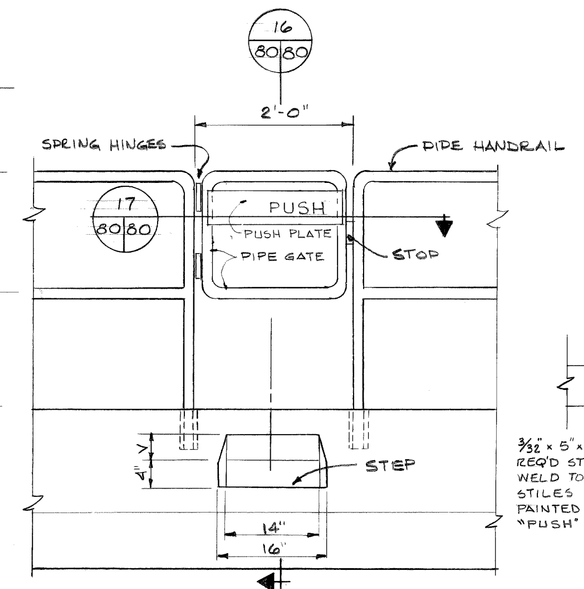

ELEVATION H (73|80)
SCALE: ¾" = 1'-0"
TYPICAL AT ALL 2'-0" HANDRAIL OPENINGS

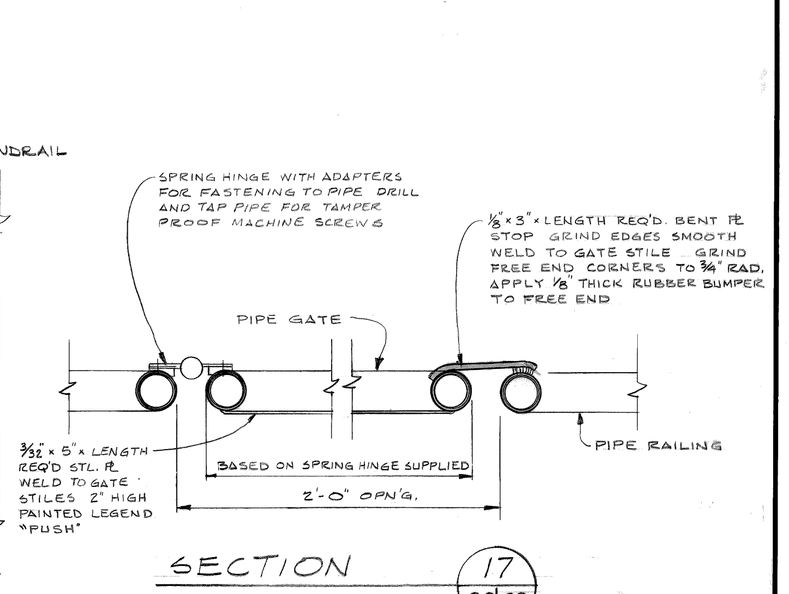

SECTION 17 (80|80)
SCALE: 3" = 1'-0"

revisions	date	approved	CITY OF DETROIT CITY ENGINEERING DEPARTMENT	ATWATER STREET RELOCATION ATWATER TUNNEL	contract no.	sheet 80 of 81
H ADDED ∠ SUPPORT FOR DOOR JAMBS	8-11-75			SECTIONS AND DETAILS	07105 A	drawing no: A 8
	designed L.T. HANSEN					
	drawn J.A. EDWARDS					
	checked					

METAL GRILLE DETAILS

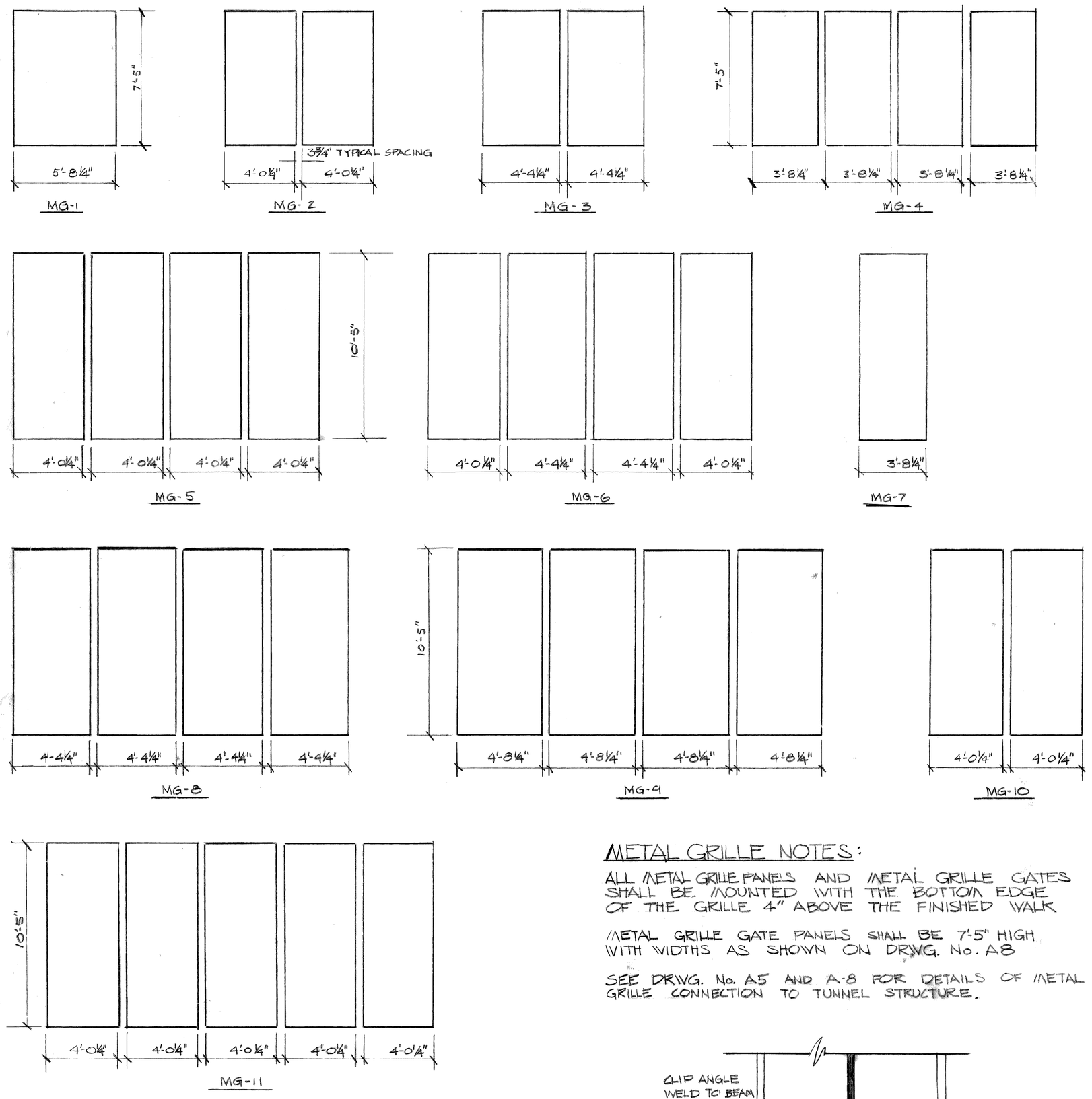

METAL GRILLE NOTES:

ALL METAL GRILLE PANELS AND METAL GRILLE GATES SHALL BE MOUNTED WITH THE BOTTOM EDGE OF THE GRILLE 4" ABOVE THE FINISHED WALK

METAL GRILLE GATE PANELS SHALL BE 7'-5" HIGH WITH WIDTHS AS SHOWN ON DRWG. No. A8

SEE DRWG. No. A5 AND A-8 FOR DETAILS OF METAL GRILLE CONNECTION TO TUNNEL STRUCTURE.

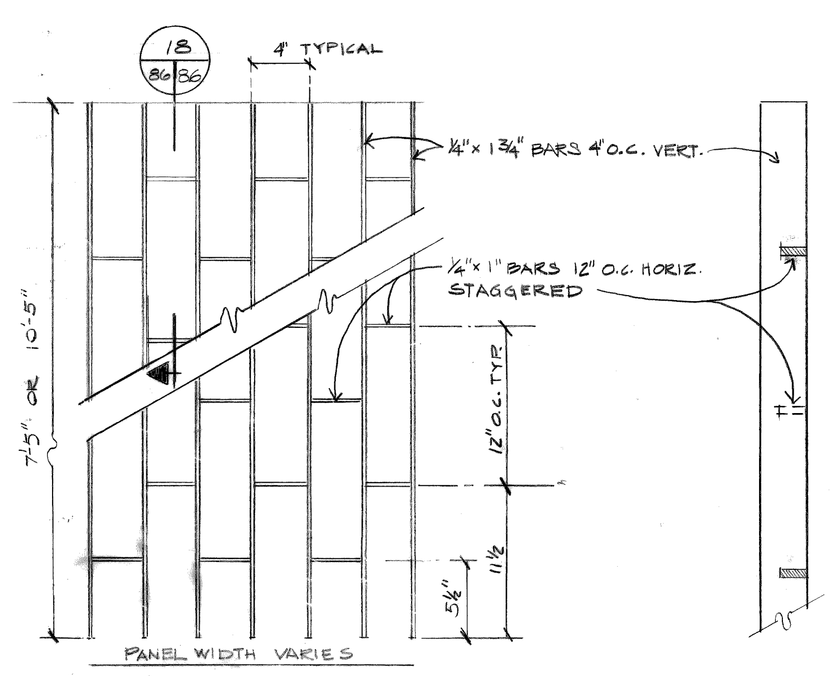

TYPICAL PANEL ELEVATION
SCALE: 1½" = 1'-0"

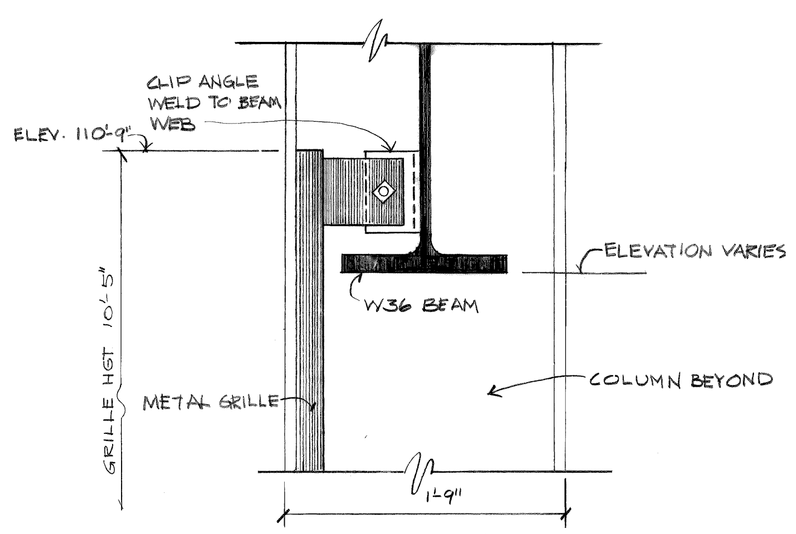

SECTION 18 / 86 86
SCALE: 3" = 1'-0"

METAL GRILLE ATTACHMENT TO STEEL BEAM
SCALE: 1½" = 1'-0"

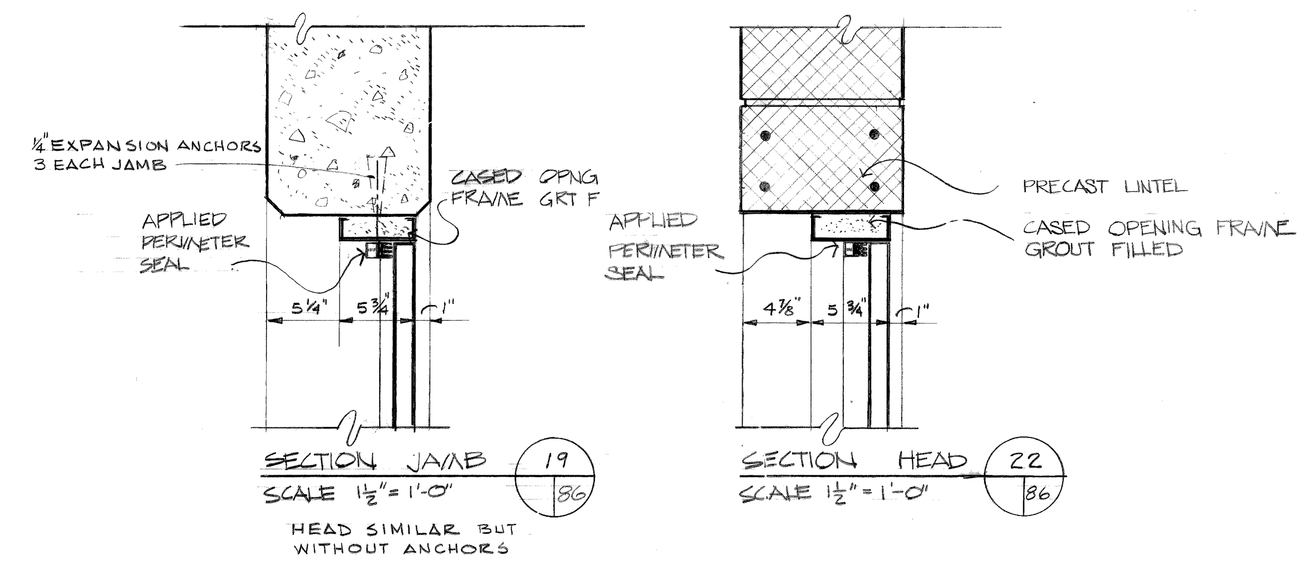

SECTION JAMB 19 / 86
SCALE 1½" = 1'-0"
HEAD SIMILAR BUT WITHOUT ANCHORS

SECTION HEAD 22 / 86
SCALE 1½" = 1'-0"

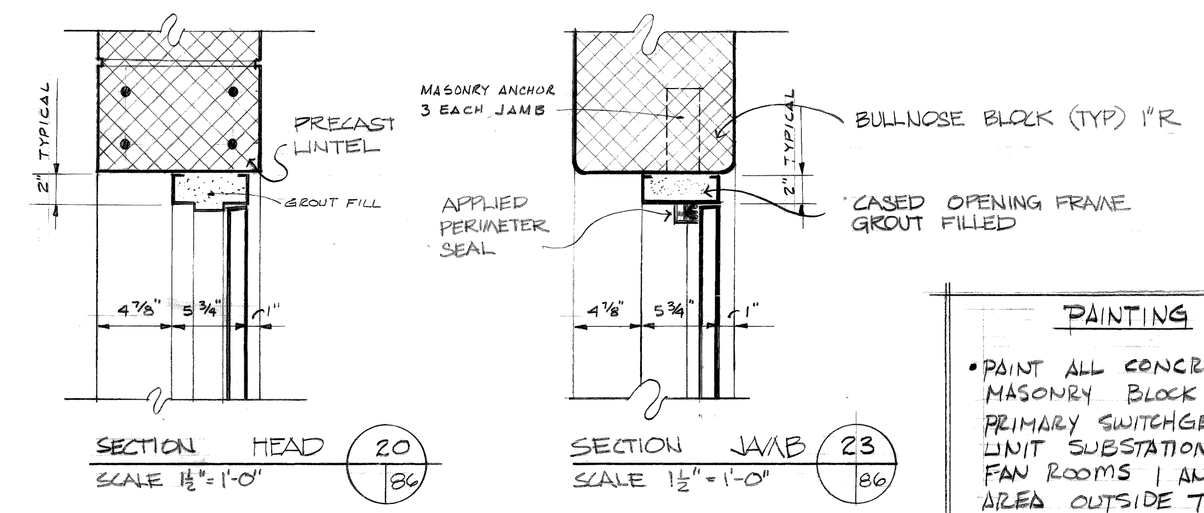

SECTION HEAD 20 / 86
SCALE 1½" = 1'-0"

SECTION JAMB 23 / 86
SCALE 1½" = 1'-0"

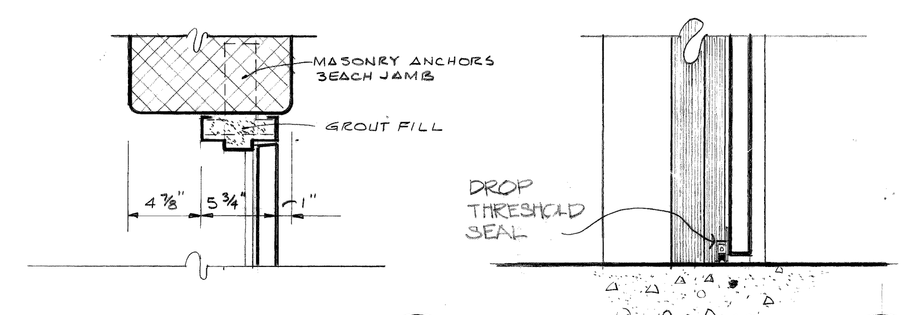

SECTION JAMB 21 / 86
SCALE 1½" = 1'-0"

SECTION SILL 24 / 86
SCALE 1½" = 1'-0"

SECTION SILL 25 / 86
SCALE 1½" = 1'-0"

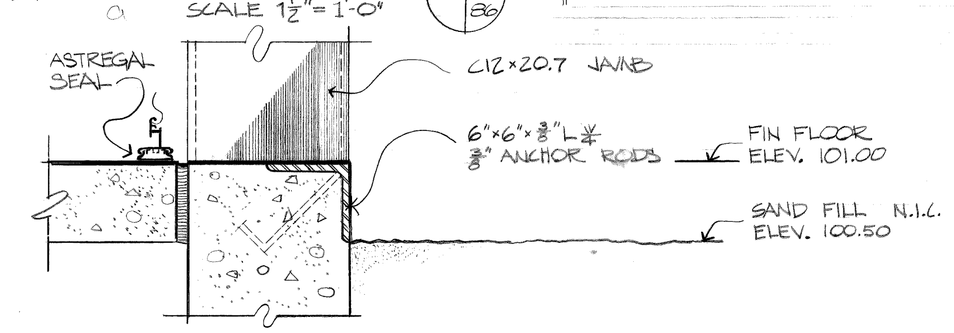

PAINTING

- PAINT ALL CONCRETE AND MASONRY BLOCK WALLS IN PRIMARY SWITCHGEAR ROOM, UNIT SUBSTATION ROOM, FAN ROOMS 1 AND 2, THE AREA OUTSIDE THESE FAN ROOMS NORTH OF COLUMN LINE "TE", FIRE PROTECTION EQUIPMENT ROOM, FAN ROOMS 3 AND 4, AND THE AREAS OUTSIDE THESE FAN ROOMS SOUTH OF COLUMN LINE "TA"
- A 3-FOOT WIDE STRIPE SHALL BE PAINTED ACROSS THE ENTIRE FLOOR WIDTH OF THE SUPPLY AND EXHAUST PLENUMS, CENTERED ON SERVICE LADDERS AND EXIT DOORS
- ISOLATED COLUMNS IN EQUIPMENT ROOMS SHALL BE UNPAINTED EXCEPT FOR A ONE FOOT HIGH COLOR BAND CENTERED 5'-6" ABOVE THE FLOOR

CONTINUED

- THE FOLLOWING SHALL NOT BE PAINTED; WALLS OF INTAKE AND DISCHARGE AIR PLENUMS - WALLS OF SUPPLY AIR PLENUM BETWEEN COLUMN LINES "TE" AND "TO" - WALLS OF EXHAUST AIR PLENUM BETWEEN COLUMN LINES "TB" AND "TA"

DOOR SCHEDULE

No.	SIZE	TYPE	MATL DOOR	MATL FRAME	DETAIL HEAD	DETAIL JAMB	DETAIL SILL	HDWRE SET	NOTES
1	3'-0" x 7'-2"	A	HM	HM	20	21		#5	THRESHOLD
2	10'-0" x 9'-0"	B	STL	STL	7	7	25		
3	3'-0" x 7'-2"	A	HM	HM	22	23	24	#4	
4	3'-0" x 7'-2"	A	HM	HM	22	23	24	#4	DOOR STOP
5	3'-0" x 7'-2"	A	HM	HM	22	23	24	#4	
6	3'-0" x 7'-2"	A	HM	HM	22	23	24	#4	DOOR STOP
7	3'-0" x 7'-0"	A	HM	HM		6		#5	
8	10'-0" x 10'-0"	B	STL	STL		7			
9	3'-0" x 7'-2"	A	HM	HM	20	21		#3	
10	10'-0" x 10'-0"	B	HM	HM		7			
11	3'-0" x 7'-2"	A	HM	HM	22	23	24	#4	
12	3'-0" x 7'-2"	A	HM	HM	22	23	24	#4	
13	3'-0" x 7'-2"	A	HM	HM	20	21		#3	
14	3'-4" x 7'-0"	A	HM	HM		6		#5	THRESHOLD
15	3'-0" x 7'-2"	A	HM	HM	22	23	24	#4	
16	3'-0" x 7'-0"	A	HM	HM	19	19	24	#4	
17	3'-0" x 7'-2"	A	HM	HM	22	23	24	#4	
18	3'-0" x 7'-2"	A	HM	HM	22	23	24	#4	
19	3'-0" x 7'-2"	A	HM	HM	22	23	24	#4	
20	3'-0" x 7'-2"	A	HM	HM	20	21		#3	
21	3'-0" x 7'-2"	A	HM	HM	22	23	24	#4	
22	3'-0" x 7'-2"	A	HM	HM	22	23	24	#4	
23	3'-0" x 7'-2"	A	HM	HM	22	23	24	#4	
24	3'-0" x 7'-2"	A	HM	HM	22	23	24	#4	
25	3'-0" x 7'-2"	A	HM	HM	22	23	24	#6	THRESHOLD
26	3'-0" x 7'-2"	A	HM	HM	22	23	24	#6	THRESHOLD
27	3'-0" x 6'-8"	A	HM	HM		8		#1	
28	3'-0" x 6'-8"	A	HM	HM		8		#1	
29	3'-0" x 6'-8"	A	HM	HM		8		#1	
30	3'-0" x 6'-8"	A	HM	HM		8		#1	
31	3'-0" x 6'-8"	A	HM	HM		8		#1	
32	3'-0" x 6'-8"	A	HM	HM		9		#2	
33	9'-0" x 7'-0"	B	STL	STL		3			
33A	8'-10½" x 7'-5"	C	HM	HM		14		#7	
34	3'-0" x 6'-8"	A	HM	HM		9		#2	
35	3'-0" x 6'-8"	A	HM	HM		9		#2	
36	3'-0" x 6'-8"	A	HM	HM		9		#2	
37	9'-3" x 7'-0"	B	HM	HM		3			
37A	9'-3" x 7'-5"	C	STL	STL		14		#7	
38	3'-0" x 6'-8"	A	HM	HM		9		#2	

DOOR TYPES

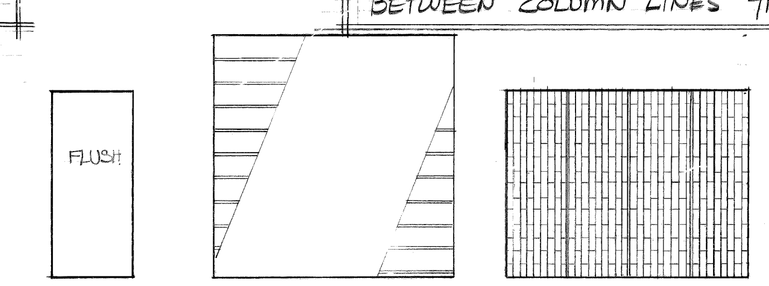

DETAIL LETTER OR NUMBER / SECTION LINE / DETAIL SHOWN / SHT No. / SHT No.

revisions

date 8-11-75
designed L.T. HANSEN
drawn C WILSON
checked

approved

CITY OF DETROIT
CITY ENGINEERING DEPARTMENT

ATWATER STREET RELOCATION
ATWATER TUNNEL

SCHEDULES & DETAILS

contract no. 07105 A

sheet 81 of 81
drawing no: A 9