CITY OF DETROIT
CITY ENGINEERING DEPARTMENT

IN CO-OPERATION WITH

MICHIGAN DEPARTMENT OF STATE HIGHWAYS AND TRANSPORTATION

AND

FEDERAL HIGHWAY ADMINISTRATION

PLAN AND PROFILE OF PROPOSED

FEDERAL AID URBAN PROJECT NO. MICHIGAN M-2000(004) JOB NO. 07105A

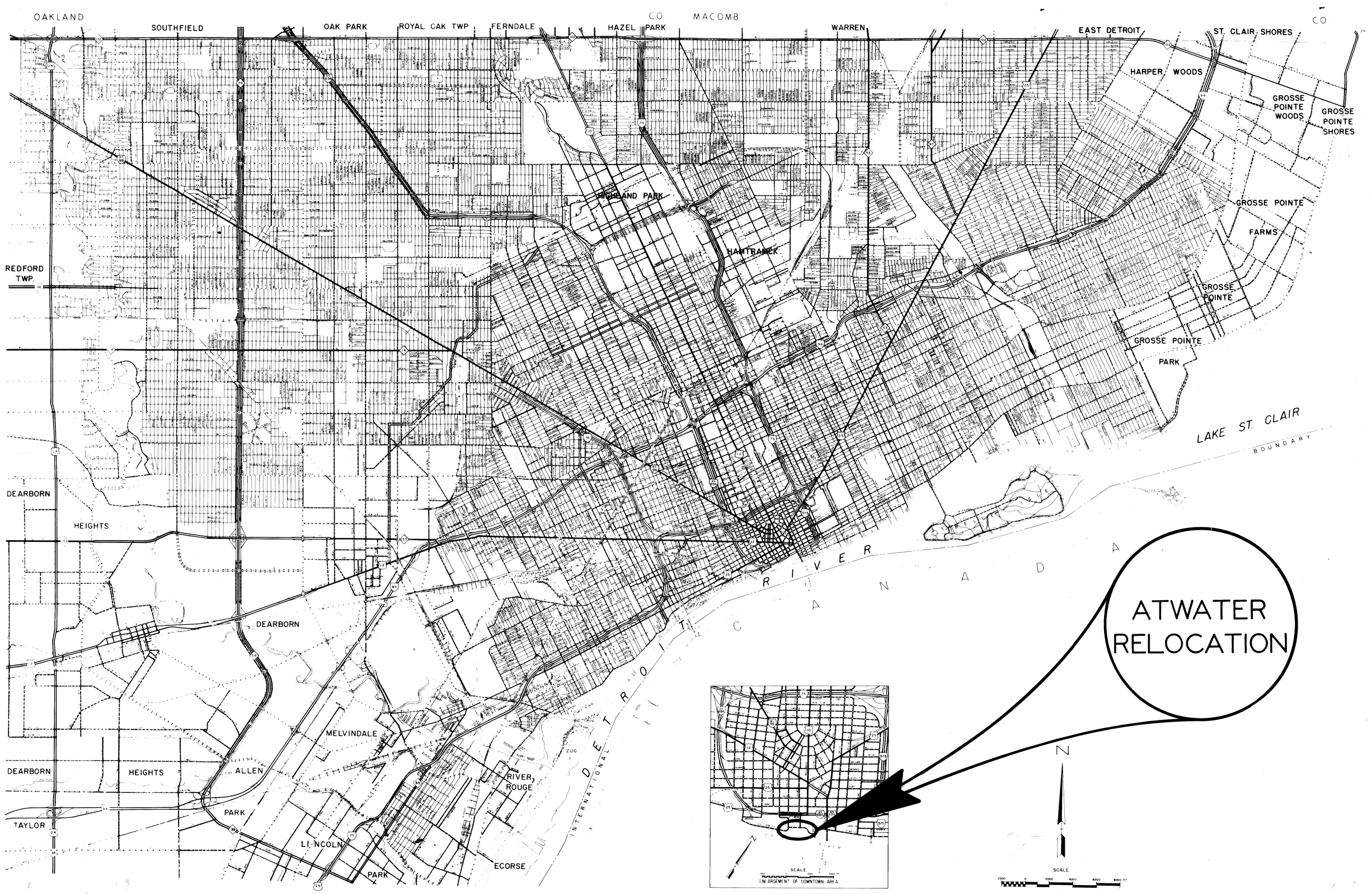

THE IMPROVEMENTS COVERED BY THESE PLANS SHALL BE DONE IN ACCORDANCE WITH THE MICHIGAN DEPARTMENT OF STATE-HIGHWAYS CURRENT STANDARD SPECIFICATIONS AND SUPPLEMENTAL SPECIFICATIONS AND OTHER RECOGNIZED SPECIFICATIONS (AS FOLLOWS) WHERE THEY APPLY.

A.C.I.
D.M.W.D.
A.I.S.C. MANUAL
FEDERAL SPECS
A.S.T.M.
A.I.A.
PLUMBING CODE
N.E.M.A.S.
U.L.
N.E.C.
I.P.C.E.A.

F.H.W.A. REG. NO.	STATE	PROJECT NO.	FISCAL YEAR	SHEET NO.	TOTAL SHEETS
5	MICH.	M2000(004) 124		1	81
STREET	CITY	COUNTY	TWP.	SHEET NO.	TOTAL SHEETS
Atwater	DETROIT	WAYNE		1	81

TRAFFIC COUNT

	1973	FUTURE
A.D.T.	3987 (2-WAY)	12000 (2-WAY)
D.H.V.	573 (1-WAY)	600 (1-WAY)

DESIGN SPEED

30 MPH

CONCRETE GRADES 35S — 3500 PSI
CONCRETE GRADES 40S — 4000 PSI
CONCRETE WHITE — 4000 PSI
STRUCTURAL STEEL— A572 GRADE 50
REINFORCING STEEL— GRADES 40 & 60

STANDARD PLANS

II - 28F
II - 39B
II - 40A
II - 43A
II - 45A
III - 65A
III - 67A
VI - 124B
E-4-A-127C
I - 19A
IV - 84B
V - 96A

CONTRACT FOR PAV'T RELOCATION & TUNNEL CONSTRUCT.

LOCAL AUTHORITY APPROVAL
CITY OF DETROIT
CITY ENGINEERING DEPARTMENT
GOVERNMENTAL AGENCY

APPROVED BY W. R. Bangsund — DEPUTY DIRECTOR — DATE 7/1/75
APPROVED BY A. T. Dudley — DIRECTOR — DATE 7/1/75

RECOMMENDED FOR APPROVAL

BY _____ ENGINEER OF TRAFFIC AND SAFETY — DATE
BY _____ CONSTRUCTION ENGINEER — DATE
BY N. A. George Scott — F.A. ENGINEER — DATE 8/15/75
PLANS CHECKED BY Donald R. Foster — DATE 8-15-75

BUREAU OF HIGHWAYS APPROVAL
APPROVED FOR COMMISSION

BY Bonnie Pantely — DEPUTY DIRECTOR — DATE 8/15/75

PREPARED UNDER SUPERVISION OF

T. E. McGowan — REGISTERED PROFESSIONAL ENGINEER — REGISTRATION NO. 8017

CITY OF DETROIT
ORGANIZATION

DETROIT, MICHIGAN
ADDRESS

(SEAL)

U. S. DEPARTMENT OF TRANSPORTATION
FEDERAL HIGHWAY ADMINISTRATION

APPROVED

[redacted]

DISTRICT ENGINEER — DATE

FILE NO. 1.25 NO. 350 STENCIL		STATE PROJECT	FEDERAL PROJECT	SHEET NO.
		2		1

8/19/75

GENERAL DRAWINGS TUNNEL

G1 FLOOR PLAN
G2 TYPICAL CROSS-SECTION
G3 TYPICAL CROSS-SECTION
G4 LOG OF SOIL BORINGS
G5 QUANTITY SHEET

RETAINING WALL DRAWINGS

RW1 RETAINING WALL PILING PLAN
RW2 RETAINING WALL DETAILS
RW3 RETAINING WALL DETAILS

ROADS

R1 GENERAL PLAN
R2 TYPICAL CROSS-SECTION
R3 ALIGNMENT
R4 CONSTRUCTION SEQUENCE
R5 REMOVAL PLAN
R6 PLAN & PROFILES
R7 DETAILED GRADES
R8 UTILITY PLANS
R9-11 SPECIAL STANDARDS & SPECIAL DETAILS
R12 ROADWAY ITEMS QUANTITY SHEETS

WATER DRAWINGS

W1 GENERAL NOTES & QUANTITIES
W2 GENERAL PLAN
W3-4 12-INCH WATER MAIN
W5 CONNECTION & ENCASEMENT
W6 MISCELLANEOUS DETAILS

STRUCTURAL

S1 PILE LOCATION PLAN
S2 TUNNEL FOUNDATION PLAN
S3 TUNNEL FOUNDATION DETAILS
S4 STEEL FRAMING PLAN
S5 STEEL FRAME DETAILS
S6 STRUCTURAL STEEL DETAILS
S7 TUNNEL ROOF SLAB PLAN
S8 TUNNEL ROOF SLAB DETAILS
S9 TUNNEL ROOF SLAB DETAILS
S10 MECHANICAL ROOMS 1 & 4 - FOUNDATION PLAN
S11 MECHANICAL ROOMS 1 & 4 - ROOF FRAMING PLAN
S12 MECHANICAL ROOMS 2 & 3 - FOUNDATION & FLOOR PLAN
S13 MECHANICAL ROOMS 2 & 3 - ROOF FRAMING PLAN
S14 WEST PLANTER BOX DETAILS
S15 EAST PLANTER BOX DETAILS
S16 EAST PLANTER BOX DETAILS

MECHANICAL

M1 FIRE PROTECTION & DRAINAGE PLANS
M2 FIRE PROTECTION DETAILS
M3 FIRE PROTECTION & DRAINAGE DETAILS
M4 FIRE PROTECTION & DRAINAGE DETAILS
M5 PLAN-FAN ROOMS 1 & 4
M6 PLAN-FAN ROOMS 2 & 3
M7 VENTILATION DETAILS
M8 VENTILATION & DRAINAGE DETAILS

ELECTRICAL

E1 SINGLE LINE & ELECTRICAL RISER DIAGRAM
E2 CKT. BKR. & LTG. CONTRACTOR CONTROL DIA., INTERLOCKS & MONITORING SYSTEM
E3 3-PHASE, 4800v. PRIMARY & 480v. SECONDARY SERVICE & DETAILS
E4 3-PHASE, 480v. POWER LAYOUT - 1
E5 3-PHASE, 480v. POWER LAYOUT - 2
E6 TUNNEL, GUIDEWAY & PLENUM LIGHTING LAYOUT & DETAILS
E7 3-PHASE 480/277v. LIGHTING & 208/120v. RECEPTACLE LAYOUT & DETAILS - 1
E8 3-PHASE 480/277v. LIGHTING & 208/120v. RECEPTACLE LAYOUT & DETAILS - 2
E9 MISCELLANEOUS AUXILIARY SYSTEM LAYOUT & DETAILS - 1 & MONITORING RISER DIAGRAM
E10 MISCELLANEOUS AUXILIARY SYSTEM LAYOUT & DETAILS - 2 & FIRE ALARM RISER DIAGRAM
E11 TUNNEL MISCELLANEOUS SYSTEMS - TRAFFIC SIGNALS & DETAILS
E12 UNDERGROUND DUCT LAYOUT & MISCELLANEOUS DETAILS
E13 3-WAY MANHOLE DETAILS
E14 2-WAY MANHOLE DETAILS
E15 CORNER MANHOLE DETAILS
E16 CABLE RACK DETAILS
E17 MANHOLE FRAMES & COVERS
E18 PANELBOARD SCHEDULES & DETAILS
E19 SYMBOLS, BATTERY CHARGER & MISCELLANEOUS DETAILS
E20 TYPE "D" FIXTURE & DETAILS

ARCHITECTURAL

A1 TUNNEL FLOOR PLAN
A2 FLOOR PLANS - MECHANICAL ROOMS 2 & 3
A3 FLOOR PLANS - MECHANICAL ROOMS 1 & 4
A4 TUNNEL ELEVATIONS
A5 SECTION - MECHANICAL ROOM NO 3
A6 SECTION - MECHANICAL ROOM NO 2
A7 SECTIONS
A8 SECTIONS & DETAILS
A9 SCHEDULES & DETAILS

revisions	date 8-11-75 designed drawn J.A.E. checked J. Mc Guire	approved T. E. McGowan STRUCTURAL ENGINEER	CITY OF DETROIT CITY ENGINEERING DEPARTMENT	ATWATER STREET RELOCATION ATWATER TUNNEL DRAWING INDEX	contract no. 07105A	sheet 2 of 81 drawing no: 2

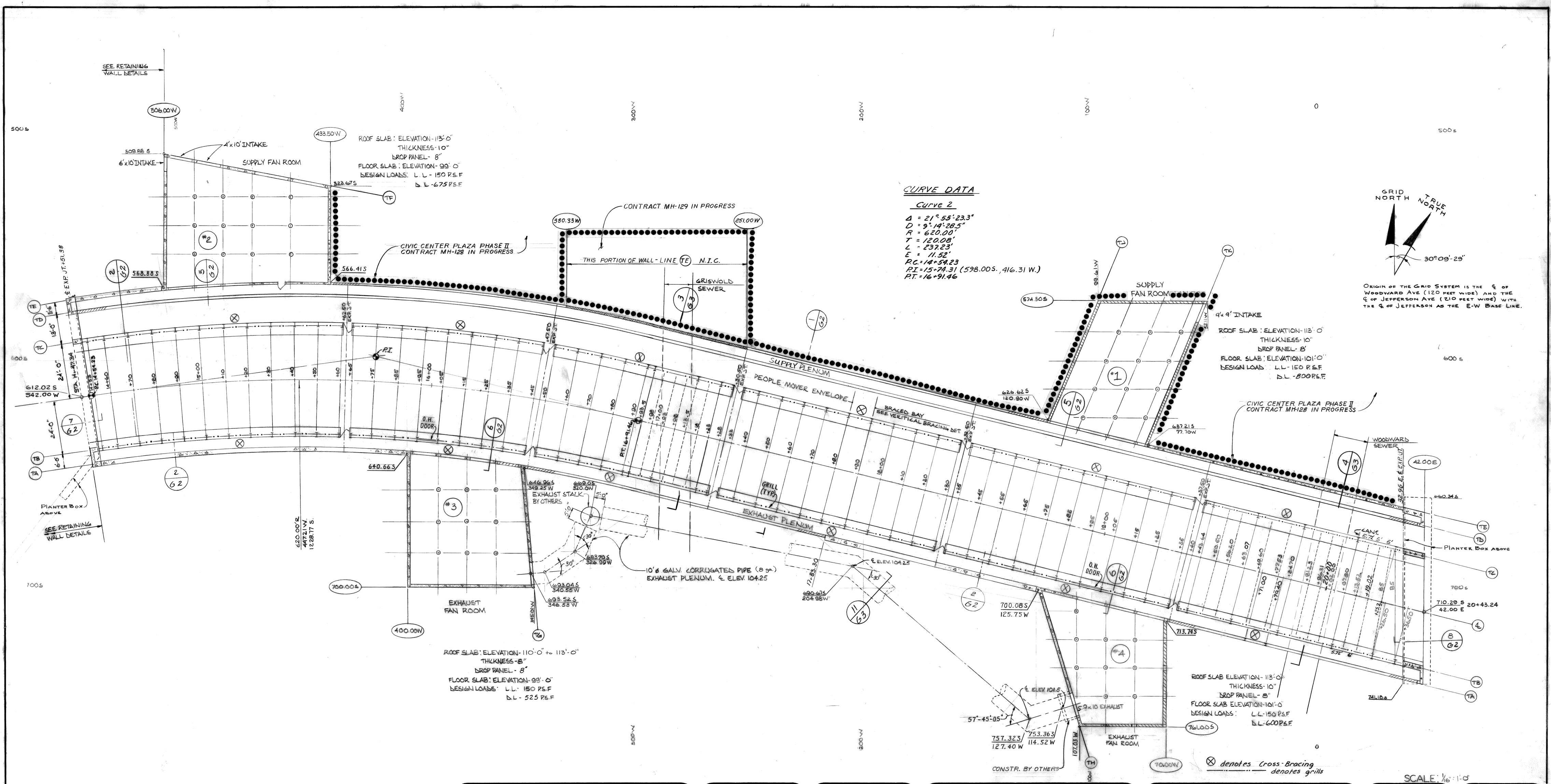

CURVE DATA

Curve 2

$\Delta = 21°55'23.3"$
$D = 9°14'28.5"$
$R = 620.00'$
$T = 120.08'$
$L = 237.23'$
$E = 11.52'$
P.C. = 14+54.23
P.I. = 15+74.31 (598.00 S., 416.31 W.)
P.T. = 16+91.46

revisions	date 8-11-75 designed T.M. drawn J.A.E. checked J. McGuire	approved T.E. McGowan STRUCTURAL ENGINEER	CITY OF DETROIT CITY ENGINEERING DEPARTMENT

ATWATER STREET RELOCATION
ATWATER TUNNEL

FLOOR PLAN

contract no. 07105 A

sheet 3 of 81
drawing no: G1

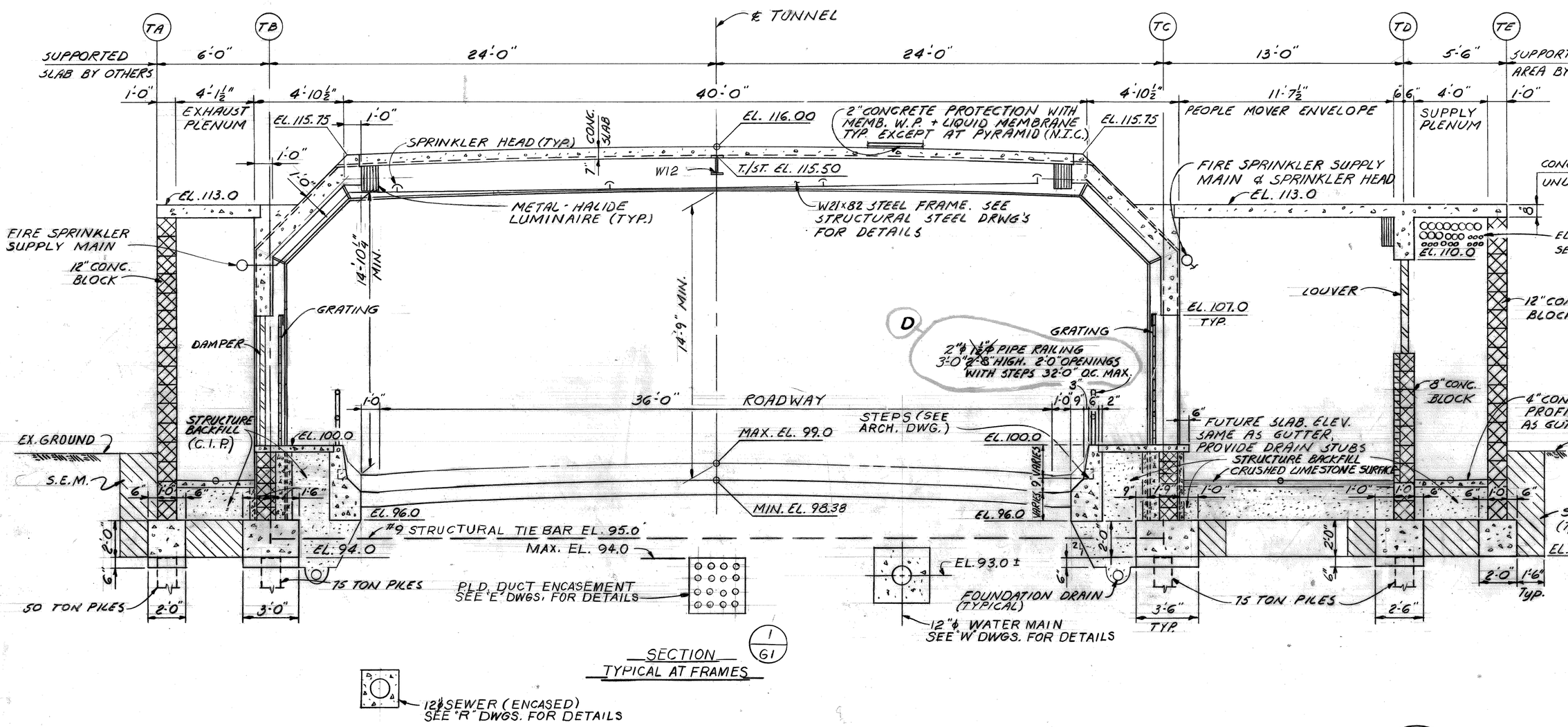

SECTION (1/G1)
TYPICAL AT FRAMES

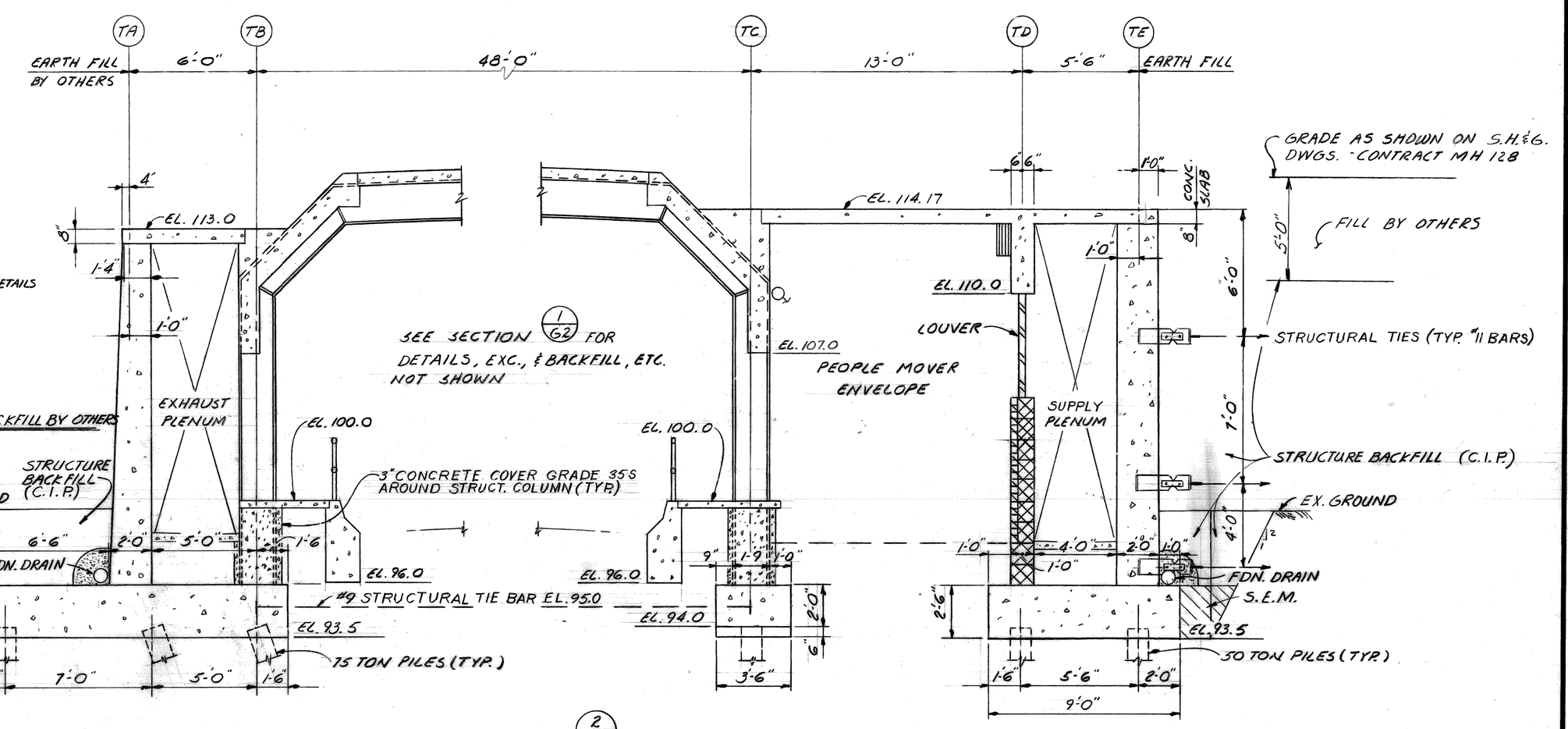

SECTION (2/G1)

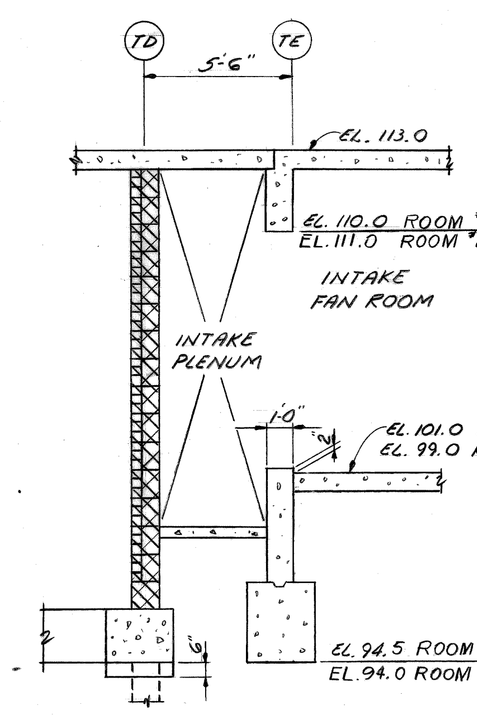

SECTION (5/G1)

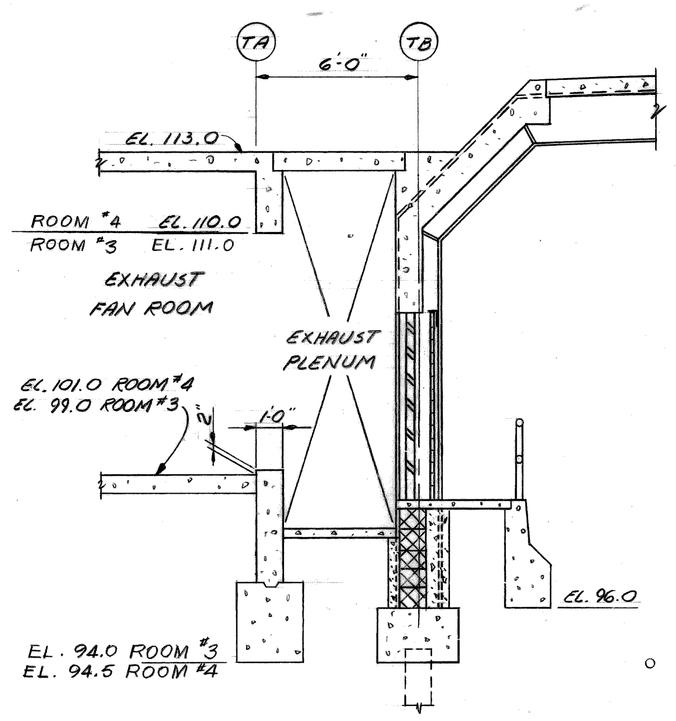

SECTION (6/G1)

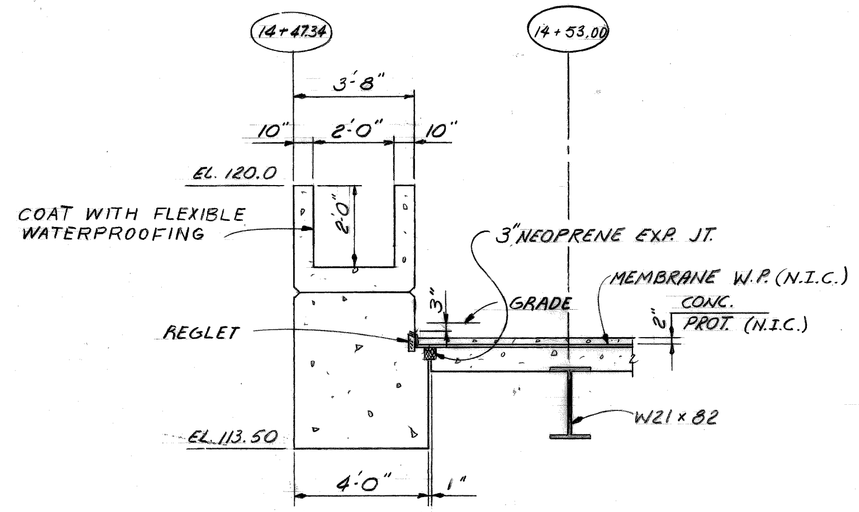

WEST PLANTER BOX
SECTION (7/G1)
SCALE: 3/8" = 1'-0"

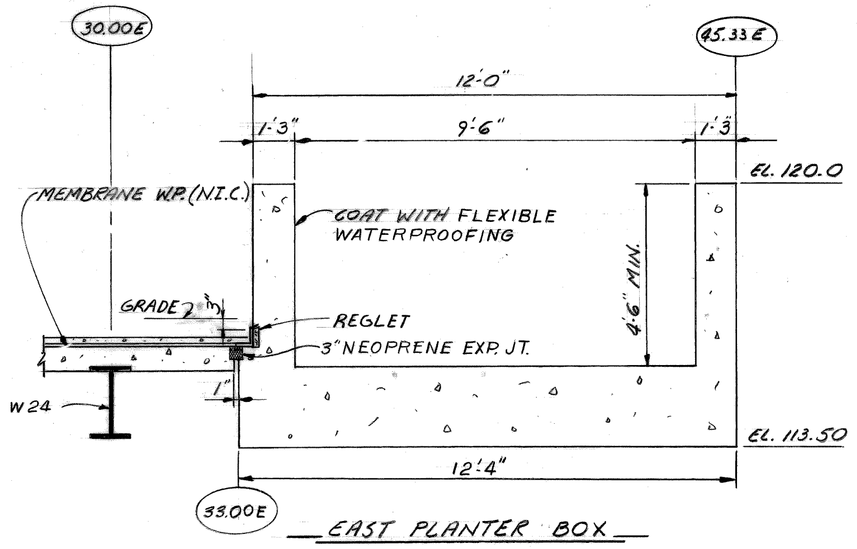

EAST PLANTER BOX
SECTION (8/G1)
SCALE: 3/8" = 1'-0"

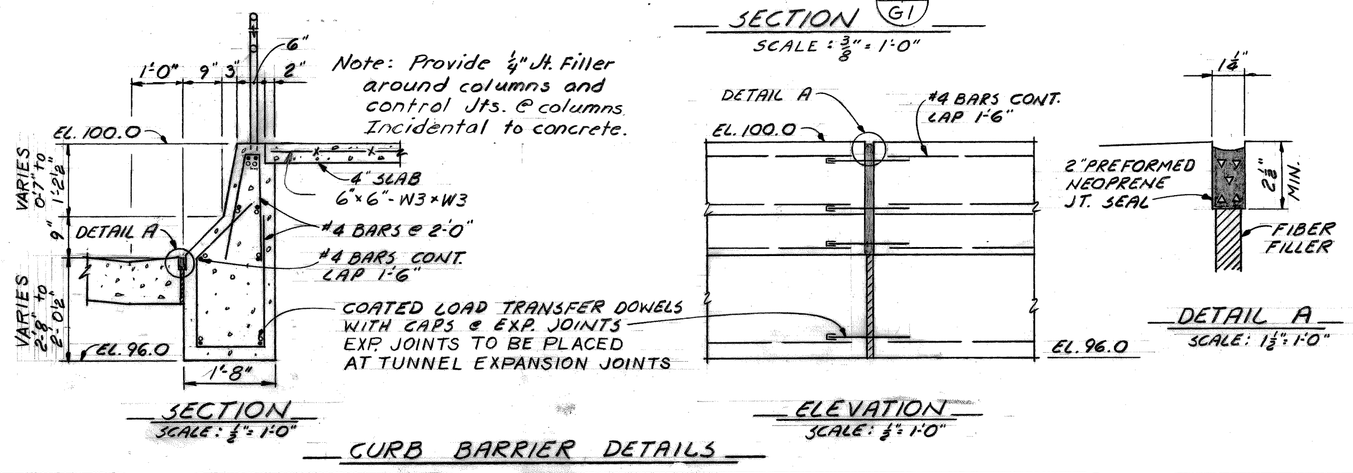

SECTION
SCALE: 3/8" = 1'-0"
ELEVATION
SCALE: 3/8" = 1'-0"
DETAIL A
SCALE: 1 1/2" = 1'-0"

CURB BARRIER DETAILS

GENERAL NOTES - STRUCTURAL

- STEEL SPEC. 1969 AISC
- MAT'L: ASTM A572 GRADE 50 UNLESS NOTED
- SHOP WELDS: E70XX
- TUNNEL LOADING:

2" GRANITE	27 #/□'
1" MORTAR BED	10
2 3/4" CONCRETE MAT	34
M.W.P.	2
7" CONCRETE SLAB	88
STEEL	10
LIGHTS - SPRINKLERS	4
	175 #/□'
LIVE LOAD	100 #/□'
TOTAL LOAD	275 #/□'

- PILES:

SECTION	DESIGN LOAD
HP 10×42	50 T
HP 12×53	75 T

- LOAD TESTING: SEE SPECIFICATIONS AND SPECIAL PROVISIONS.
- ALL PILES SHALL BE PRE-BORED TO EL. 75.0. VOIDS AROUND PILE SHALL BE FILLED WITH SAND & WATER.
- STRUCTURAL TIES: GRADE 60 REINF. BARS OF A SIZE AS CALLED FOR ON THE PLANS. WELDING SHALL BE IN ACCORDANCE WITH AWS. D12.1-61.
- UNCLASSIFIED FOUNDATION EXCAVATION LIMITS ARE VERTICAL LINES 18" BEYOND ALL FOOTING OR GRADE BEAM OUTLINES FROM THE BOTTOM OF FOOTING OR GRADE BEAM TO EXISTING GROUND OR TO THE GENERAL ROADWAY EXCAVATION LIMITS - SEE "R" DRAWINGS.
- S.E.M. DENOTES SELECTED EXCAVATED MATERIAL.
- CURB BARRIER, 4" SIDEWALK, AND PLENUM SLAB TO BE GRADE 35S CONC.

SCALE: 1/4" = 1'-0" U.N.

revisions		
D	Chg. size and height of Pedestrian Railing	

date	8-11-75
designed	T. M.
drawn	A.G.
checked	Mc Guire

approved
T. E. McGowan
STRUCTURAL ENGINEER

CITY OF DETROIT
CITY ENGINEERING DEPARTMENT

ATWATER STREET RELOCATION
ATWATER TUNNEL

TYPICAL CROSS-SECTION

contract no. 07105 A

sheet 4 of 81
drawing no: G2

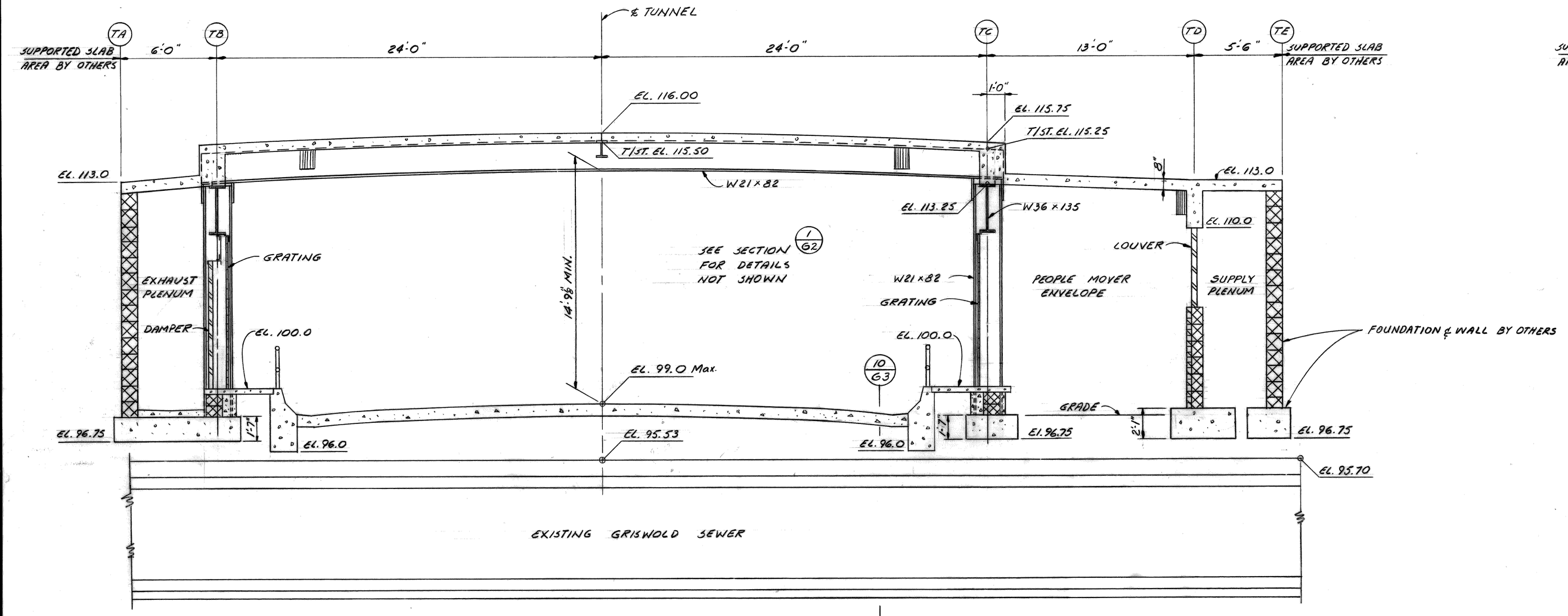

SECTION 3/G1

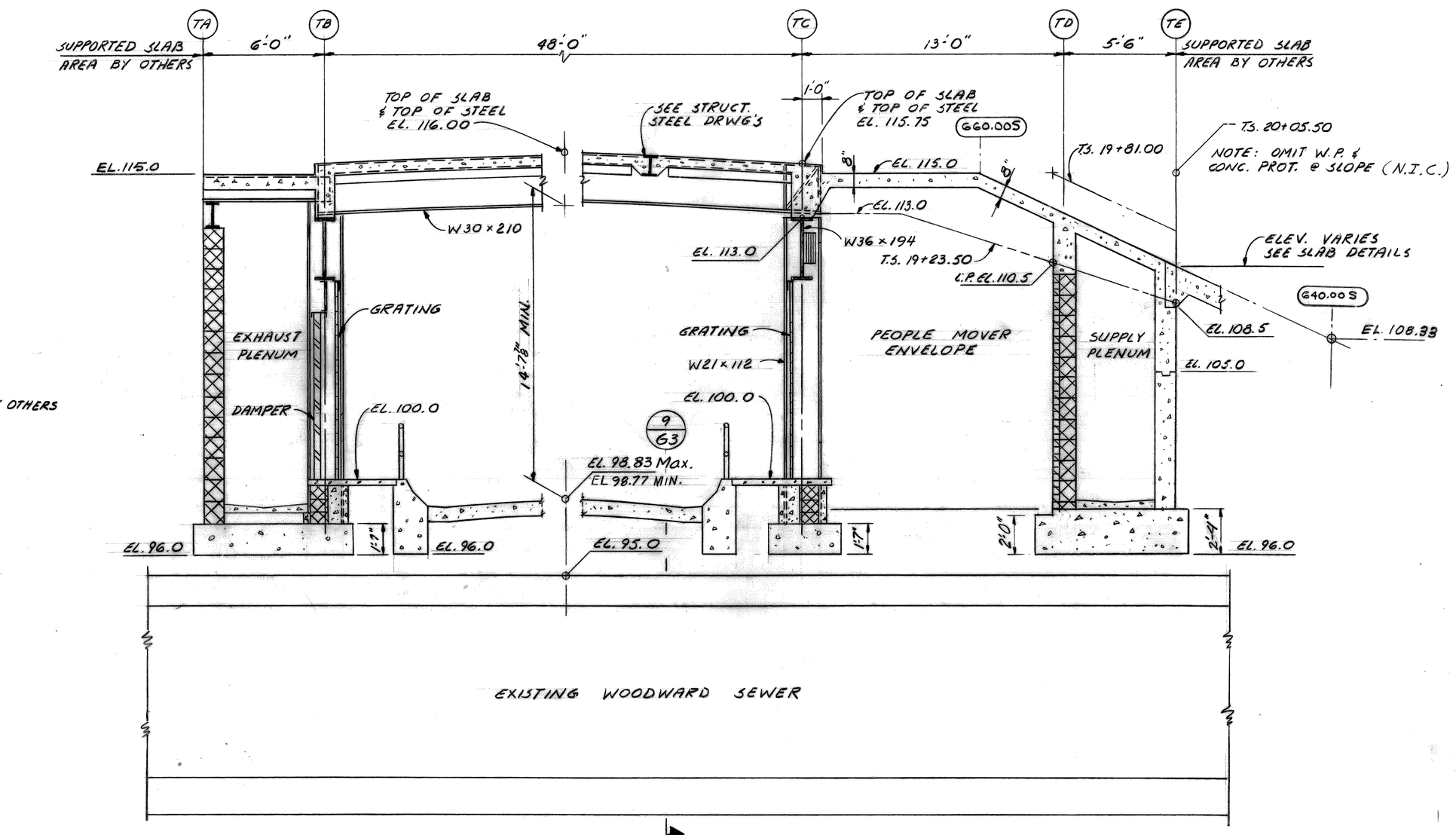

SECTION 4/G1

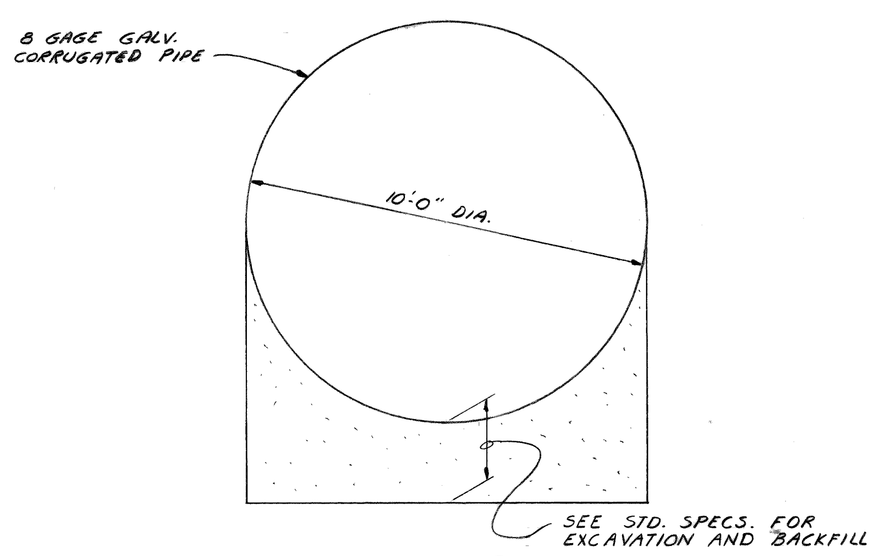

SECTION 11/G1

SCALE 3/8" = 1'-0"

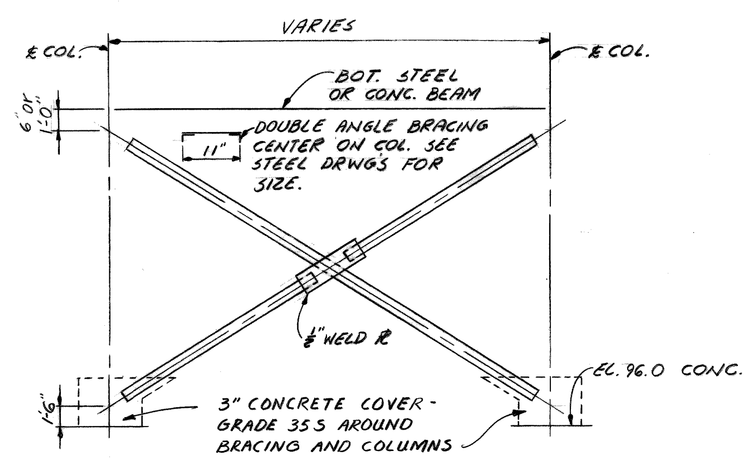

VERTICAL BRACING DETAIL

NO SCALE

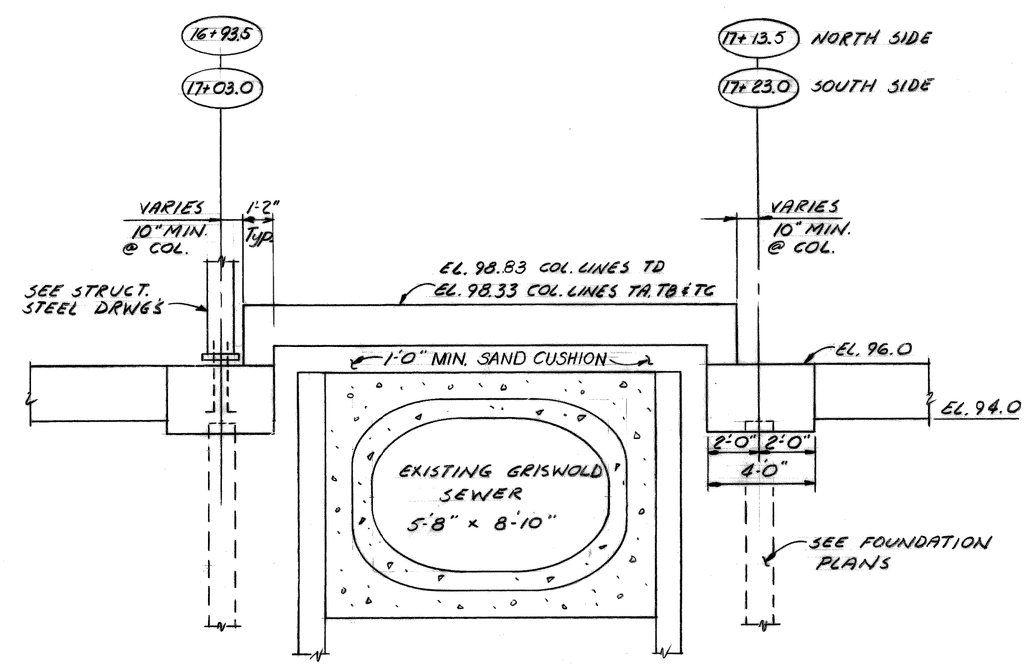

SECTION 10/G3

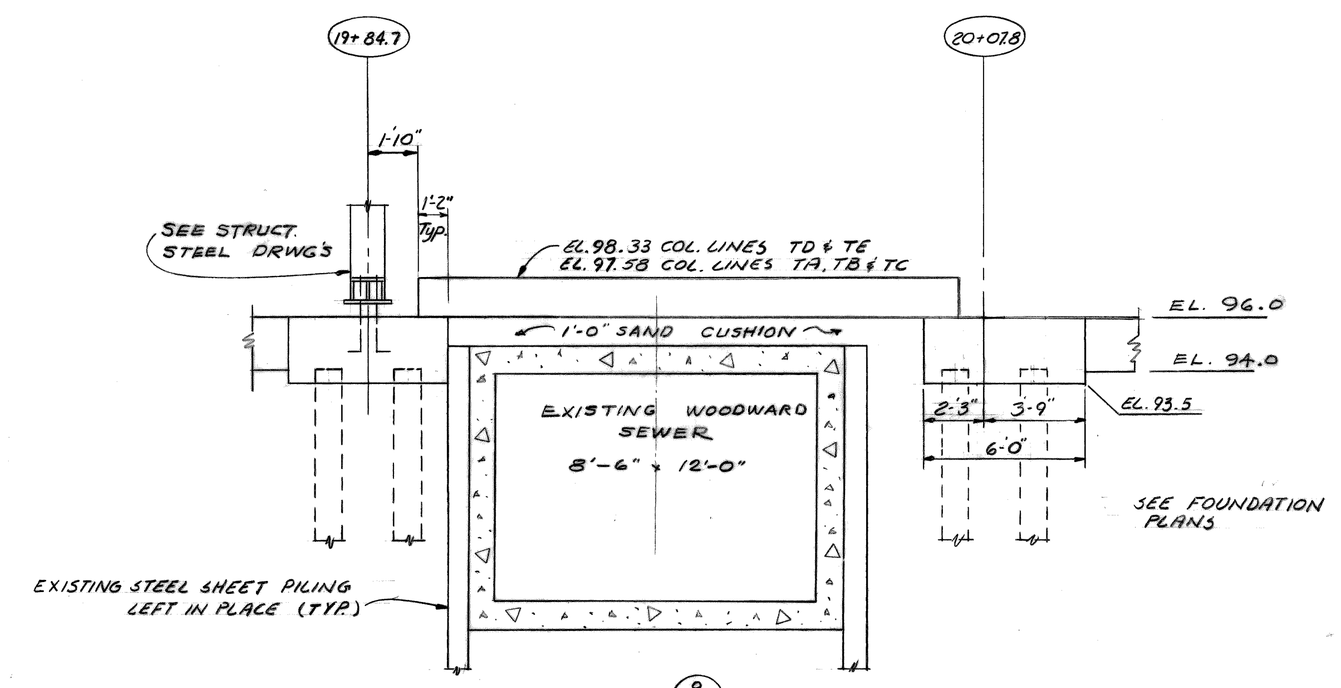

SECTION 9/G3

SCALE : 1/4" = 1'-0" U.N.

revisions	date 8-11-75 designed T.M. drawn A.G. checked J. McGuire	approved T. E. Quinn STRUCTURAL ENGINEER	CITY OF DETROIT CITY ENGINEERING DEPARTMENT	ATWATER STREET RELOCATION ATWATER TUNNEL TYPICAL CROSS-SECTION	contract no. 07105A sheet 5 of 81 drawing no: G3

BORING NO. 3

G.S. 100±

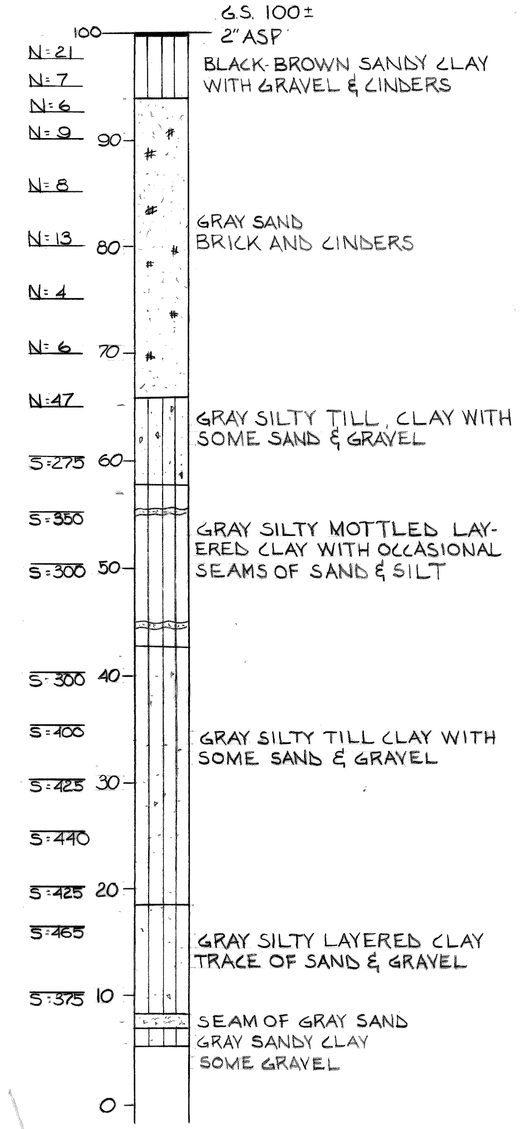

BORING NO. 4

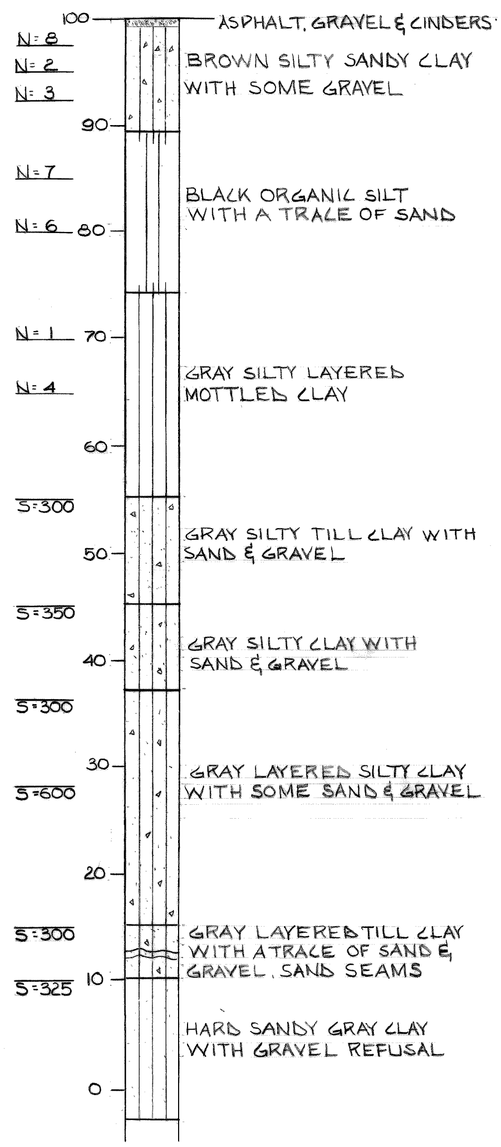

BORING NO. 5

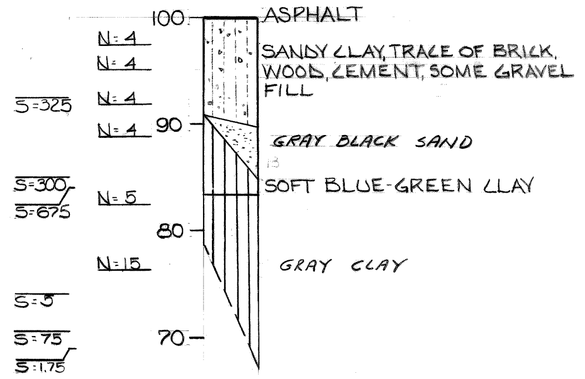

ENCOUNTERED WATER AT ELEVATION 96.0

BORING NO. 6

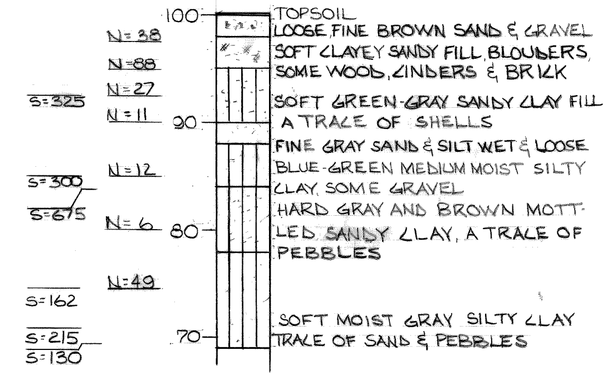

ENCOUNTERED WATER AT ELEVATION 95.0

BORING NO. 7

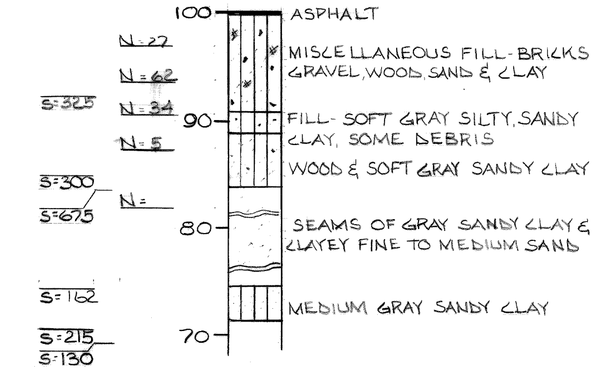

ENCOUNTERED WATER AT ELEVATION 97.0

BORING NO. 11

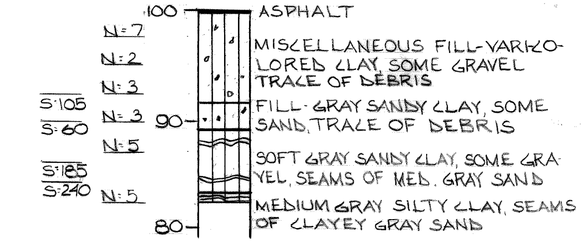

ENCOUNTERED WATER AT ELEVATION 92.0

BORING NO. 12

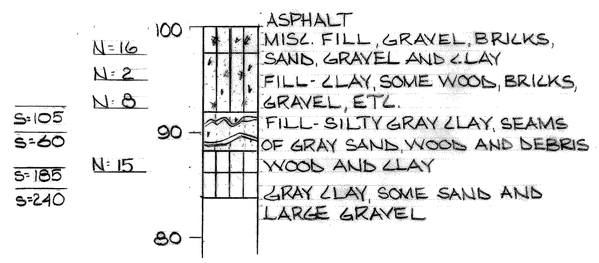

HIT REFUSAL AT 16'-2" DRILLED FOR ONE HOUR AND COULD NOT GET BY 16'-2"

BORING NO 13

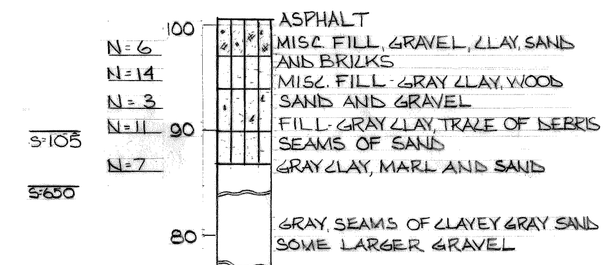

ENCOUNTERED WATER AT ELEVATION 96.0

BORING NO.15

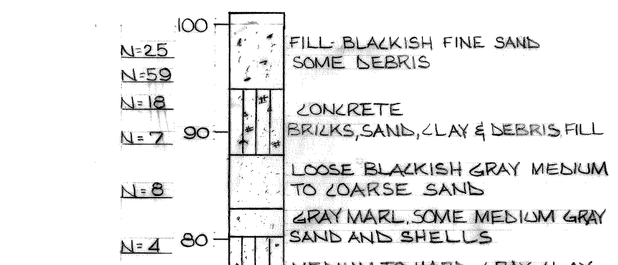

ENCOUNTERED WATER AT ELEVATION 92.0

COMPOSITE SHEAR STRENGTH PROFILE

TRANSVERSE SHEARING RESISTANCE (LBS. PER SQ. FT.)

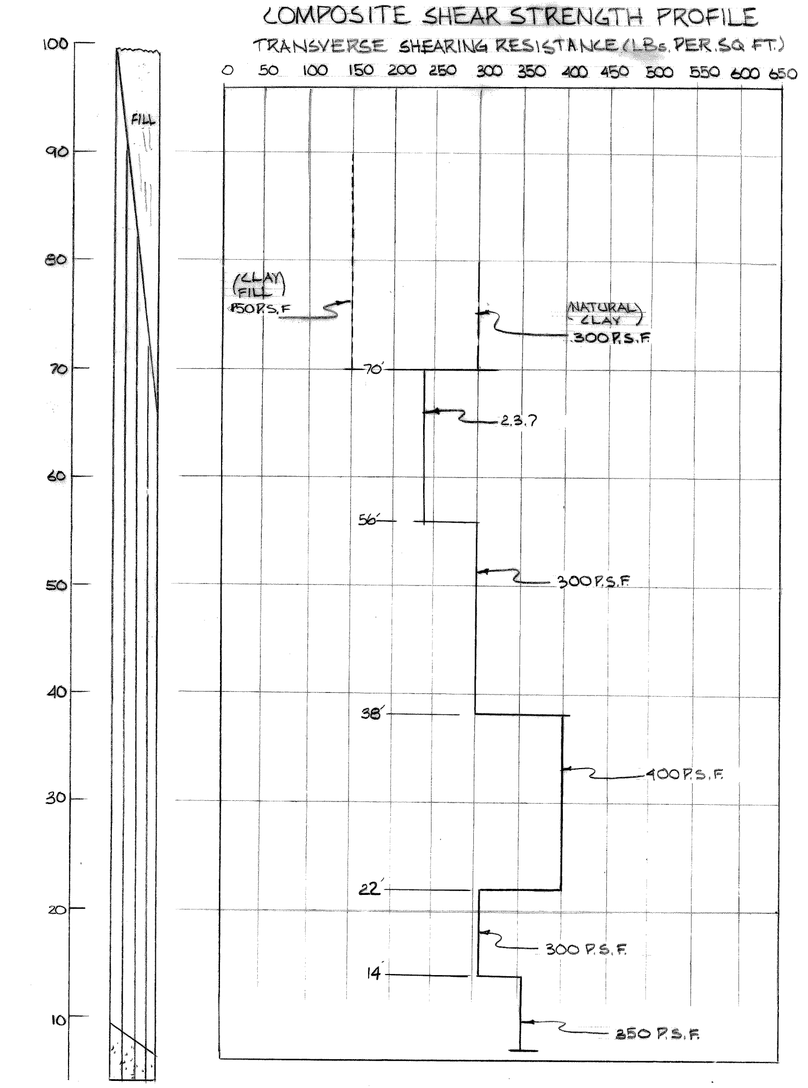

COMPOSITE SHEAR STRENGTH PROFILE OF UPPER CLAYS

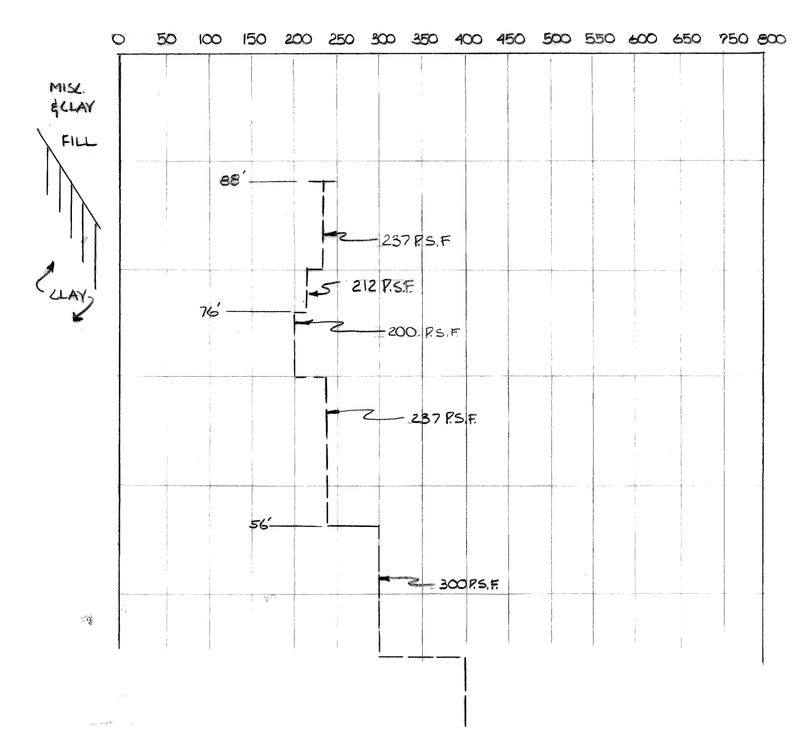

NOTES

N- INDICATES THE NUMBER OF BLOWS REQUIRED TO DRIVE THE 2" ϕ SAMPLER 6" (OR AS NOTED) USING A 140 LB. HAMMER FALLING 30". WHERE BLOW COUNT IS NOT SHOWN, SAMPLER WAS LEVERED, PUSHED OR HAND DRIVEN.

S- INDICATES TRANSVERSE SHEARING RESISTANCE IN LBS. PER SQ. FT.

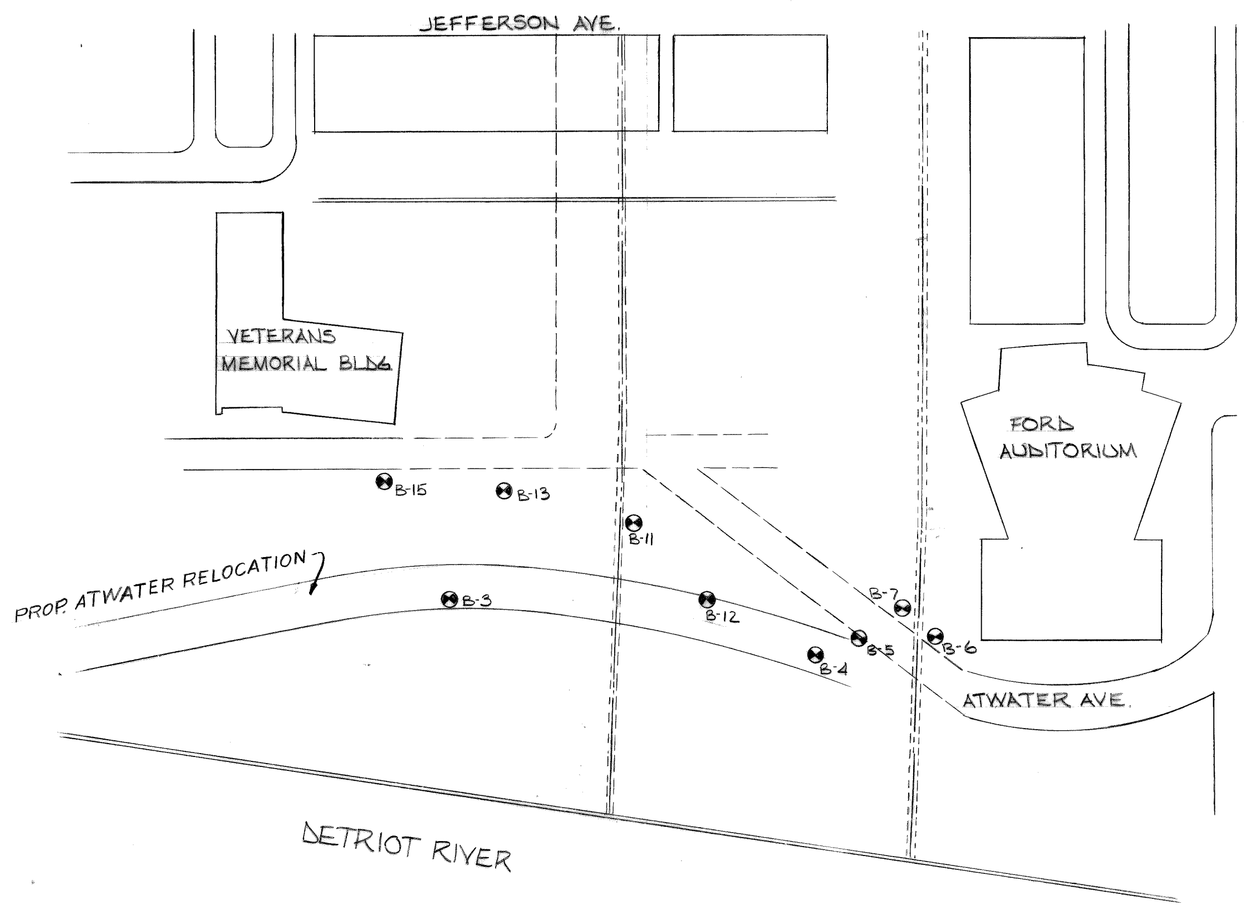

LOCATION PLAN

revisions	date 8-11-75	approved T. E. McEllavan, STRUCTURAL ENGINEER	CITY OF DETROIT CITY ENGINEERING DEPARTMENT
	designed		
	drawn J. A. EDWARDS		
	checked A.G.		

ATWATER STREET RELOCATION
ATWATER TUNNEL

LOG OF SOIL BORINGS

contract no. 07105 A

sheet 6 of 81
drawing no: G 4

ATWATER TUNNEL QUANTITES

	PAY ITEMS	AS PER PLANS TOTAL	UNITS	TUNNEL GENERAL	MECHANICAL ROOM #1	MECHANICAL ROOM #2	MECHANICAL ROOM #3	MECHANICAL ROOM #4	RETAINING WALLS	AS CONSTRUCTED TOTAL	UNITS	TUNNEL GENERAL	MECHANICAL ROOM #1	MECHANICAL ROOM #2	MECHANICAL ROOM #3	MECHANICAL ROOM #4	RETAINING WALLS	
	STRUCTURAL ITEMS																	
	UNCLASSIFIED FOUNDATION EXCAVATION	6165	CYD	1511	325	1139	676	235	2279	6063	CYD.							A1013
	STRUCTURE BACKFILL (CIP)	7331	CYD	2078					5253	11405	CYD.							A1013
	SUBBASE (CIP)	198	CYD		48	56	51	43		468	CYD.							A1013
	PILES FURNISHED AND DRIVEN - 50 TON	13,025	LFT	2880					10,145	14209	LFT.							A1005
	SPLICES - PILES - 50 TON	326	EACH	72					254	205	EA.							A1013
	LOAD TEST PILES - 50 TON	2	EACH	1					1	1	EA.							A1013
	PILES FURNISHED AND DRIVEN - 75 TON	39452	LFT	24648	3,870	3792	2412	2730		39708	LFT.							A1005
	SPLICES - PILES - 75 TON	987	EACH	667	97	95	60	68		729	EA.							A1013
	LOAD TEST PILES - 75 TON	2	EACH	2						2	EA.							
	FURNISH EQUIPMENT FOR DRIVING PILES	LUMP SUM	LSUM							LUMP SUM	L.S.							
	CONCRETE - GRADE 405	1279.8	CYD	591.6	122.8	244.5	182.4	138.5		1399.7	CYD							A1011
	CONCRETE - GRADE 355	3859.9	CYD	1914.3	161.8	229.8	160.7	147.3	1246.0	3767.5	CYD							A1011
	CONCRETE - WHITE	1003.0	CYD	1003.0						991	CYD							A1011
	STEEL REINFORCEMENT	570,900	LBS	354,008	44,116	55,882	42,776	42,118	32,000	795044	LBS.							A1011
	STRUCTURAL TIES	38,577	LBS	10,806					27771	37322	LBS							A1011
	WELDED WIRE FABRIC	2321	SYD	1,135	286	337	307	256		2317	SYD.							A1011
	WATER REDUCING RETARD ADMIX	290	GALS	234	16	14	12	14		183	GALS.							A1013
	WATERSTOP - TYPE NON-METALLIC	160	SFT	120		40				164	SFT.							A1013
	2" PREFORMED NEOPRENE JOINT SEAL	1300	LFT	1300						1207	LFT.							A1013
	EPOXY BONDING AGENT	68	SFT				68			63	SFT.							A1013
	EXPANSION JOINT DRAIN	332	LFT	130					202	279	LFT.							A1013
	STRUCTURAL STEEL - FURN AND FAB (A 572 - ROLLED)	661,758	LBS	661,758						657112	LBS.							A1011
	STRUCTURAL STEEL - ERECTION (A 572 - ROLLED)	661,758	LBS	661,758						657112	LBS							A1011
	STRUCTURAL STEEL - FURN AND FAB (A 36 - ROLLED)	31,554	LBS	31,554						31554	LBS							
	STRUCTURAL STEEL - ERECTION (A36 - ROLLED)	31,554	LBS	31,554						31554	LBS							
	MANHOLE FRAMES AND COVERS	580	LBS			255	325			580	LBS							
	JOINT WATERPROOFING	471	SFT	171					300	706	SFT.							A1011
	WATERPROOFING - FLEXIBLE SYSTEM	1973	SFT	1973						1900	SFT.							A1011
	DAMPPROOFING	8849	SFT	4677	151	832	1587	196	1406	7923	SFT.							A1011
	120 IN CORR STRUCT PLATE PIPE (16 GIN.)	267	LFT		233		34			262	LFT.							A1011
	72 IN REINFORCED CONCRETE PIPE	22	LFT				22			22	LFT.							
	CRUSHED LIMESTONE SURFACE	776	SYD	776						1007	CYD							A1013
	FOUNDATION DRAINS - 6 IN.	2140	LFT	1390					750	2123	LFT.							A1011
	3" PREFORMED NEOPRENE JOINT SEAL	560	LFT	560						526	LFT.							A1013
	PREBORING PILES THRU CONCRETE OR ROCK	500	LFT	500						71	LFT.							A1013
EXTRA	REINFORCE MASONRY PLENUM WALLS 1@$5000.00									$3,260.23	DLRS							A2005
EXTRA	VENT LOUVRES WITH CURTAIN FIRE DAMPERS 4@$250 = $1000.00																	A2007
EXTRA	BALANCING AUTH. (A2007 & 2009) -4@$250 = -$1000.00																	A2013
EXTRA	BALANCING FORCE ACCT. (A2005) -1@ $1739.77																	A2014
EXTRA	ADJUSTMENT - INCREASED DRIVING COST PER PILE 420 @ $25.00 = $10,500.00									420	EACH							A4001
	MECHANICAL ITEMS																	
	PLUMBING	LUMP SUM	LSUM							L.S.	L.S.							
	FIRE PROTECTION	LUMP SUM	LSUM							L.S.	L.S.							
	VENTILATION	LUMP SUM	LSUM							L.S.	L.S.							
EXTRA	FURNISH & INSTALL ONE ADDITIONAL 8" VALVE PER REVISION "X" 1 @ $600.00									1	EACH							A2003
	ELECTRICAL ITEMS																	
	ELECTRICAL LIGHT AND POWER	LUMP SUM	LSUM							L.S.	L.S.							
	ROADWAY ELECTRICAL WORK	LUMP SUM	LSUM							L.S.	L.S.							
	4800 VOLT PRIMARY METAL CLAD SWITCHGEAR	LUMP SUM	LSUM							L.S.	L.S.							
	4800 - 480/277 VOLT SECONDARY - SELECTIVE UNIT SUB	LUMP SUM	LSUM							L.S.	L.S.							
EXTRA	ALTERING LUMINAIRES 148 @ $13.50 = $1998.00									148	EACH							A2006
EXTRA	RELAY SUBSTITUTION 6 @ 188.9267 = $1133.56									6	EACH							A2008
EXTRA	ADJUSTMENT - ROADWAY ELECT. WORK L.S. $1530.00									$1,530.00	DLRS							A4003
	ARCHITECTURAL ITEMS																	
	MASONRY	LUMP SUM	LSUM							L.S.	L.S.							
	MISCELLANEOUS METALS	LUMP SUM	LSUM							L.S.	L.S.							
	ROLLING STEEL CURTAINS	LUMP SUM	LSUM							L.S.	L.S.							
	HOLLOW METAL DOORS AND FRAMES	LUMP SUM	LSUM							L.S.	L.S.							
	CAULKING	LUMP SUM	LSUM							L.S.	L.S.							
	PAINTING	LUMP SUM	LSUM							L.S.	L.S.							
EXTRA	ADDITIONAL BRACING FOR METAL DOORS 10 @ $115.00 = $1150.00									10	EACH							A2004
EXTRA	ADJUSTMENT - MISCELLANEOUS METALS 1 @ $8004.00									$8,004.00	DLRS							A4002

CHECKED CONTRACT SECTION DATE 10/20/78

revisions	date 8-11-75 designed drawn J. A. EDWARDS checked J. M. Guire	approved T. E. McGowan STRUCTURAL ENGINEER	CITY OF DETROIT CITY ENGINEERING DEPARTMENT	ATWATER STREET RELOCATION ATWATER TUNNEL QUANTITY SHEET	contract no. 07105 A sheet 7 of 81 drawing no: G 5

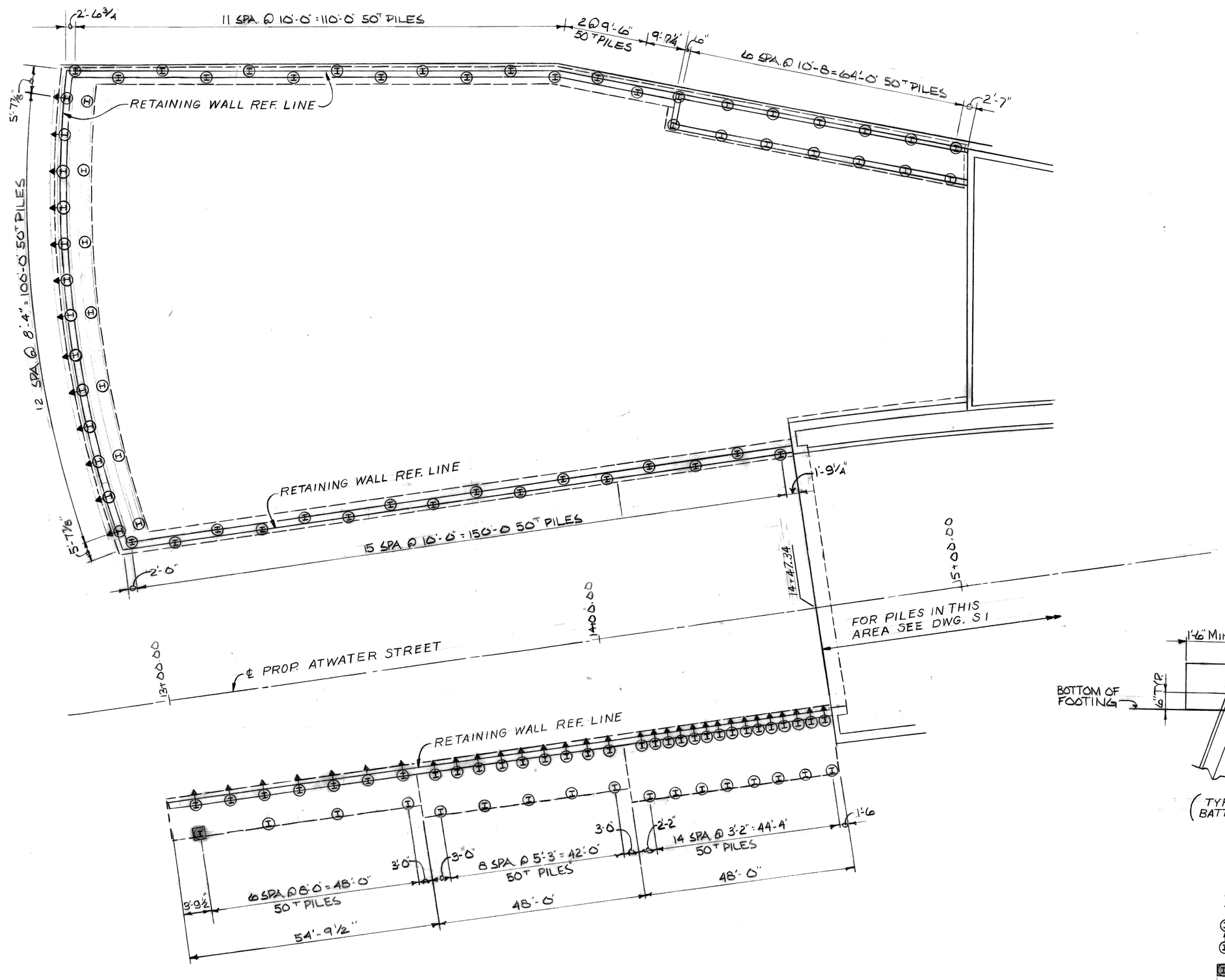

PILING PLAN

NOTE. FOR PILING TRANSVERSE SPACING SEE FOOTING SECTIONS SH. # RW2
ALL SPACING ALONG RETAINING WALL REF. LINE SEE SH. # RW2

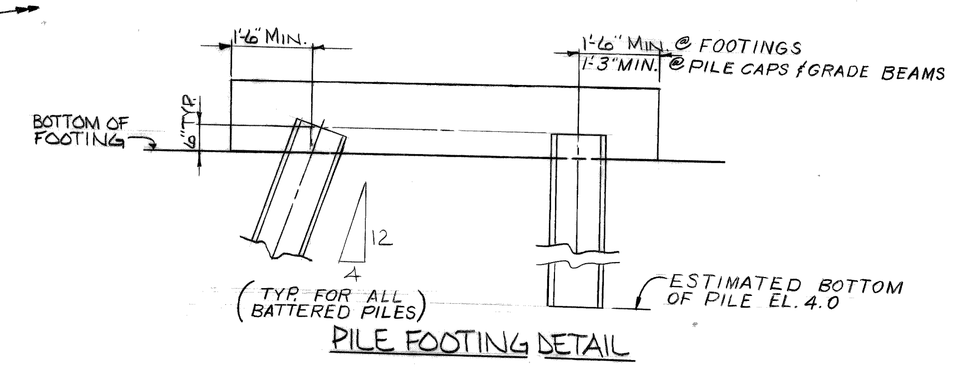

PILE FOOTING DETAIL

- DENOTES 75 TON VERTICAL PILES
- DENOTES 75 TON BATTER PILES
- DENOTES 50 TON VERTICAL PILES
- DENOTES 50 TON BATTER PILES
- DENOTES TEST PILE AND LOAD TEST PILE - 50 TON
- DENOTES TEST PILE AND LOAD TEST PILE - 75 TON

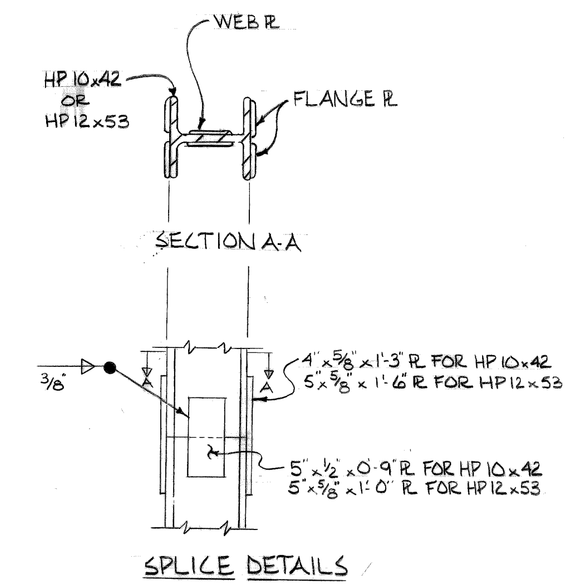

SPLICE DETAILS

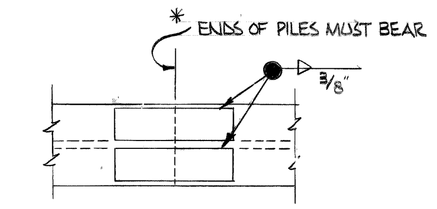

*NOTE

SET UPPER SPLICE SECTION IN PLACE WITH SPLICE R.'S ATTACHED TAP SEVERAL TIMES WITH THE HAMMER TO IMPROVE BEARING CONTACT, THEN COMPLETE WELDING OF R.'S TO THE LOWER SETION.

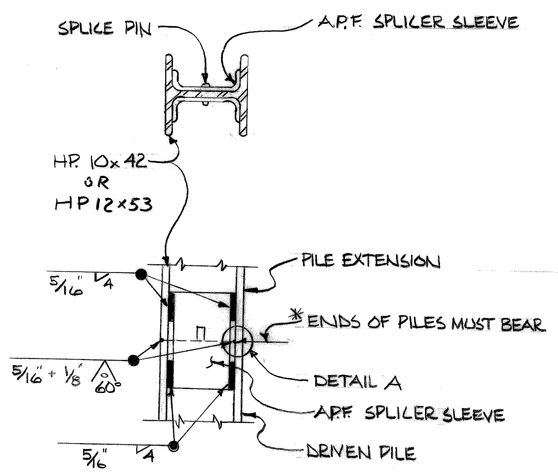

ALTERNATE SPLICE DETAILS
(A.P.F. ASSOCIATED PIPE & FITTING COMPANY)

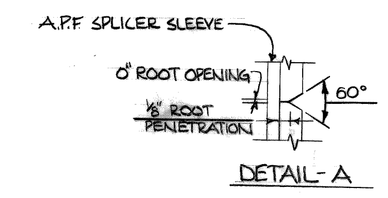

DETAIL-A

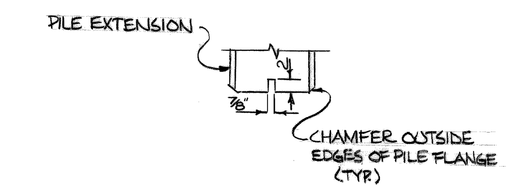

NOTCH DETAIL

H PILE SPLICE DETAILS

GENERAL NOTES:

50T STEEL H PILES SHALL BE HP10x42

75T STEEL H PILES SHALL BE HP12x53

ALL PILES SHALL BE DRIVEN TO OR INTO HARDPAN TO ACHIEVE A MINIMUM TEST LOAD CAPACITY OF 150T FOR 50T PILES OR 200T FOR 75T PILES AS PER SPECIFICATIONS OR DRIVEN TO PRACTICAL REFUSAL.

FULL BUTT WELD SPLICES FOR STEEL PILES WILL BE PERMITTED AS AN ALTERNATE TO THE SPLICES SHOWN ON THE PLAN

ALL PILES SHALL BE PRE-BORED TO EL. 75.0. VOIDS AROUND PILES SHALL BE BACKFILLED BY SLUICING AND OR JETTING SAND AS REQUIRED. PRE-BORING AND BACKFILLING ARE INCIDENTAL TO PILES

FINAL PILE LOCATION SHALL BE WITHIN 3 INCHES OF ITS EXACT LOCATION

PILES SHALL BE DRIVEN IN ACCORDANCE WITH THE M.D.S.H. STANDARD SPECIFICATIONS AND THE SPECIAL PROVISION PERTAINING TO THIS JOB.

PILES MAY BE FABRICATED OF RANDOM LENGTHS PROVIDED, HOWEVER, NO MORE THAN TWO (2) SPLICES ARE REQUIRED FOR ANY INDIVIDUAL PILE AS DRIVEN

SCALE: 1/16" = 1'-0"

revisions	date 8-11-75 designed M.C. drawn J.A.E. checked J.M. Guire	approved T. E. McSorley STRUCTURAL ENGINEER	CITY OF DETROIT CITY ENGINEERING DEPARTMENT	ATWATER STREET RELOCATION ATWATER TUNNEL RETAINING WALL PILING PLAN	contract no. 07105A sheet 8 of 81 drawing no: RW1

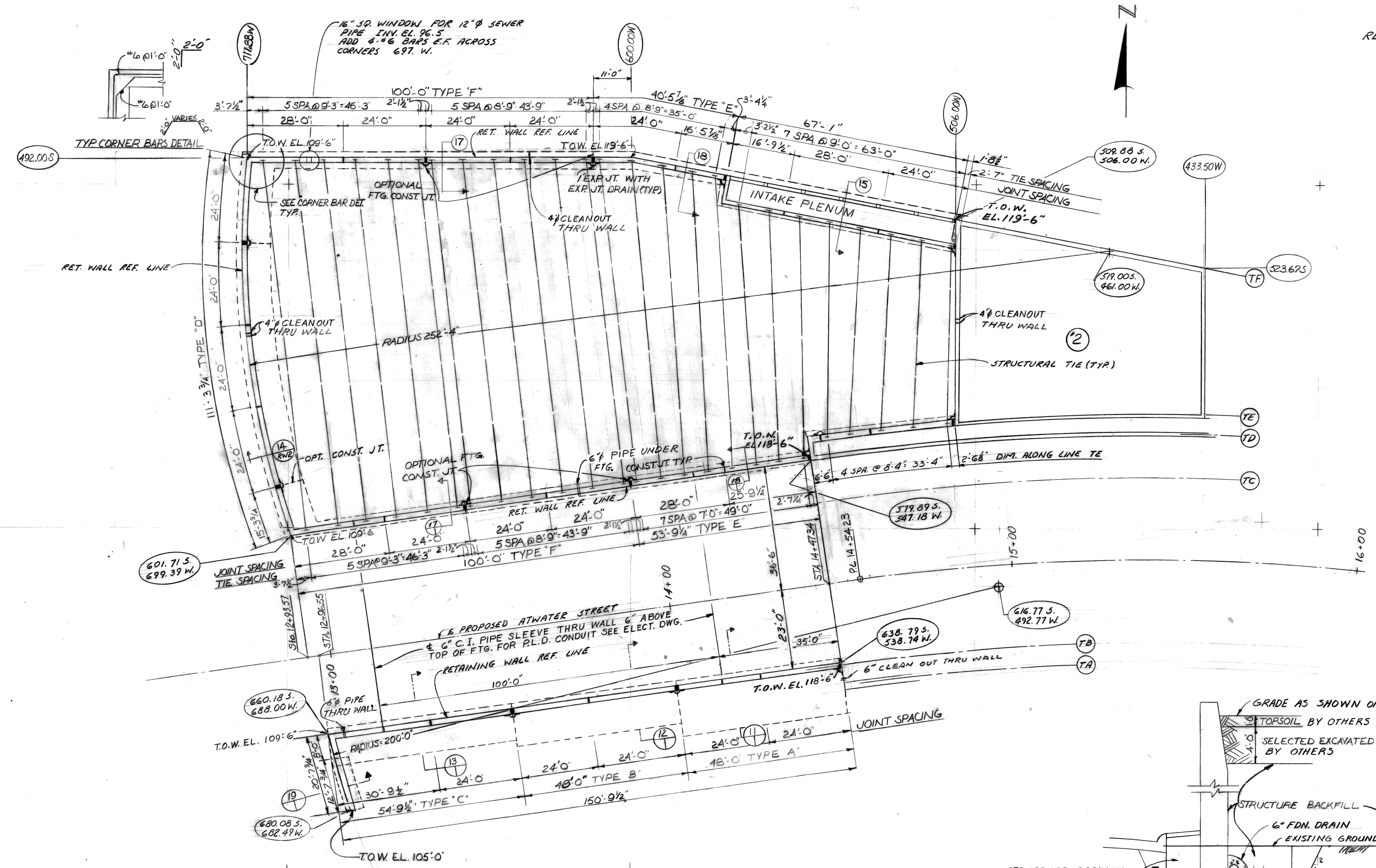

RETAINING WALL PLAN

SCALE 1/16" = 1'-0"

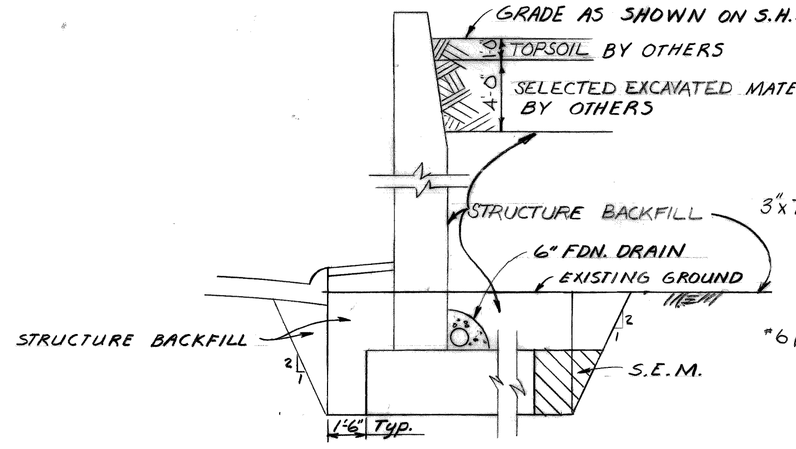

TYPICAL WALL BACKFILL DETAIL

NO SCALE

NOTE: STRUCTURE BACKFILL ABOVE EXISTING GROUND BY OTHERS FOR WALLS TYPE A, B, & C. STRUCTURE BACKFILL IN FRONT OF WALL TO BE AS SHOWN OR AS DEFINED ON ROAD DRAWINGS.

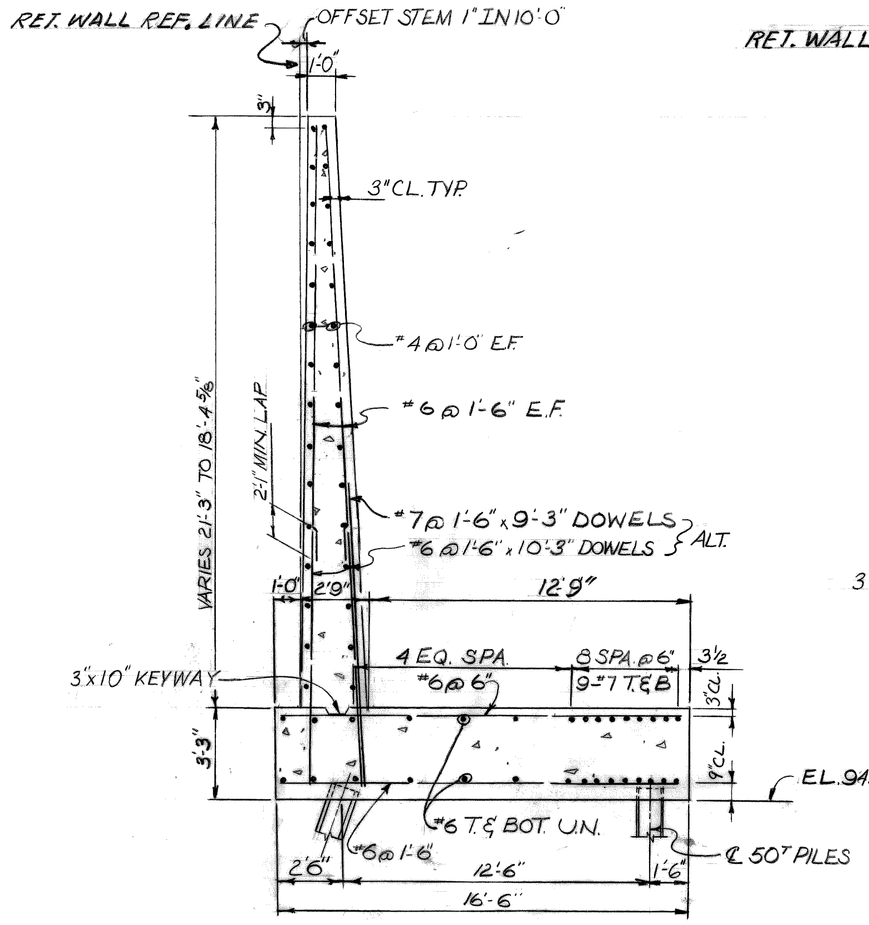

SECTION 11 TYPE A

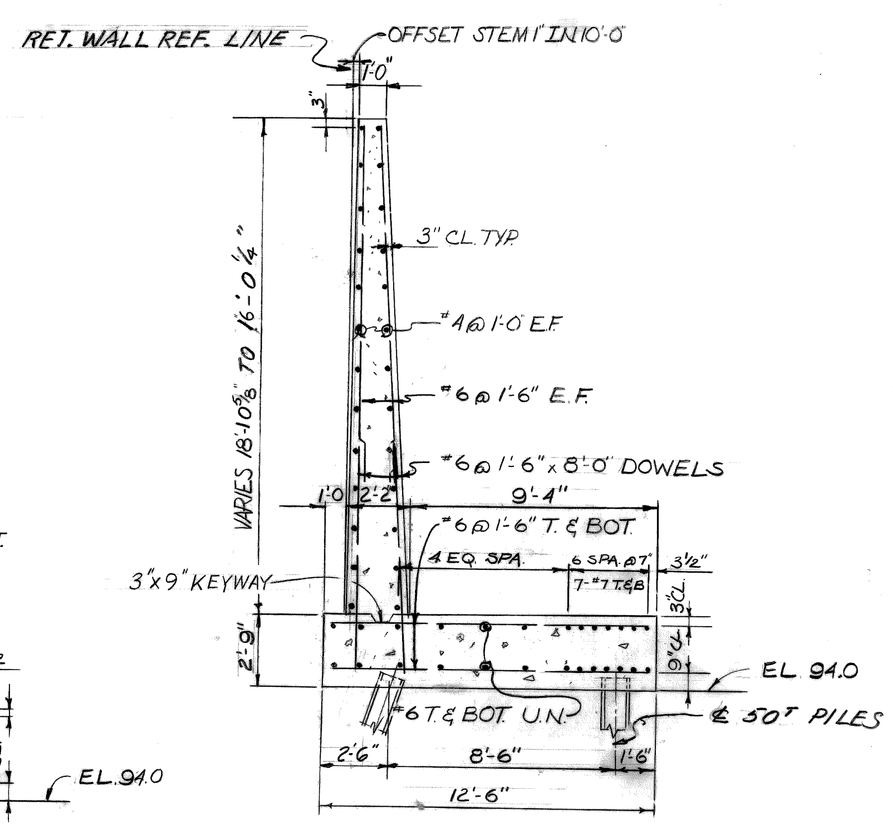

SECTION 12 TYPE B

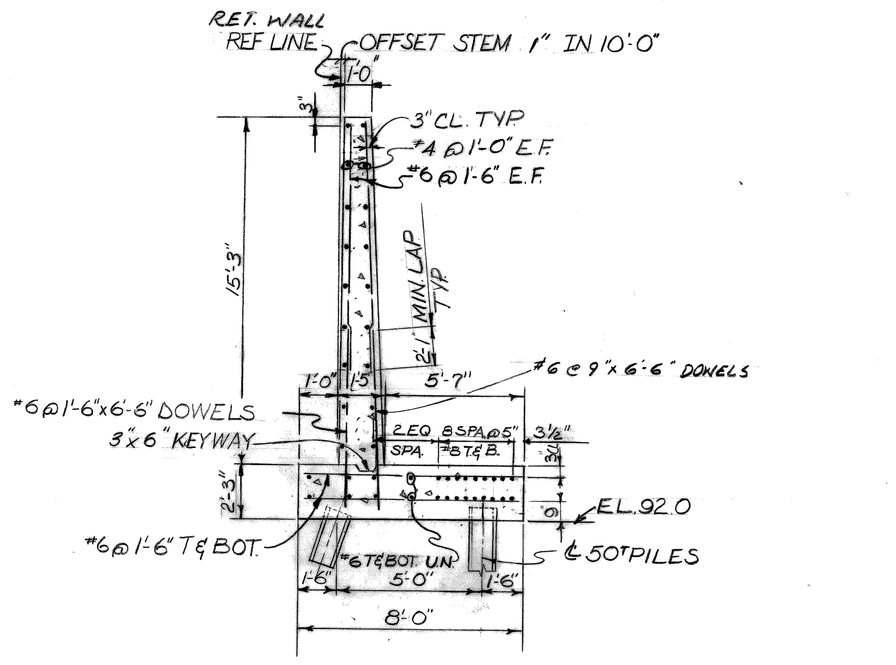

SECTION 14 TYPE D

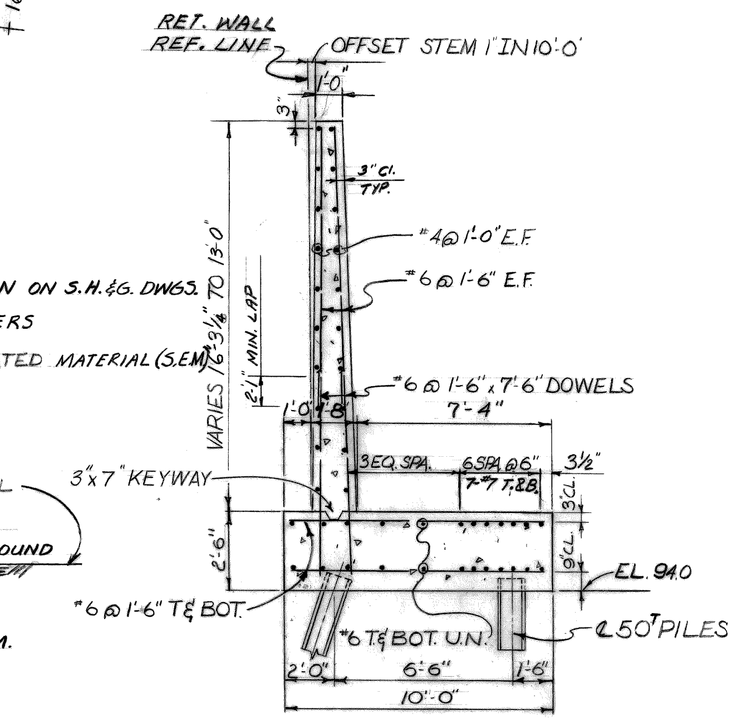

SECTION 13 TYPE C

NOTE: SCALE 1/4" = 1'-0" EXCEPT AS NOTED

GENERAL NOTES:

f'c = 3500 P.S.I. @ 28 DAYS GRADE 36.5

REINFORCING STEEL SHALL CONFORM TO A.S.T.M. A 615 GRADE 60

ALL HORIZONTAL BARS IN CONCRETE WALLS SHALL BE CONTINUOUS.

SPLICE SHALL COMPLY WITH A.C.I. 318. TOP AND BOTTOM BARS FOR FOOTING SHALL BE OF MAXIMUM OBTAINABLE LENGTHS. SPLICE SHALL BE LOCATED AT MID-SPAN FOR TOP BARS AND AT SUPPORTS FOR BOTTOM. COMPLYING WITH A.C.I. 318.

THE EXPOSED FACE OF THE RETAINING WALL SHALL HAVE VERTICAL 3/4" Δ MOULDING 4'-0" INTERVALS BETWEEN JOINTS.

BRACE OR OTHERWISE PROTECT WALL DURING ERECTION AS REQUIRED TO PROTECT WORK FROM DAMAGE DUE TO HIGH WINDS OR OTHER CAUSES.

PLACE BACKFILL MATERIALS UNIFORM LAYERS & SYMMETRICALLY ON BOTH SIDES OF WALL. EACH LAYER SHALL BE NOT MORE THAN 12 INCHES.

FOR LOCATION AND SIZE OF P.L.D. PIPE SLEEVE AND CLEANOUT PIPES SEE MECH. AND ELECT. DWGS.

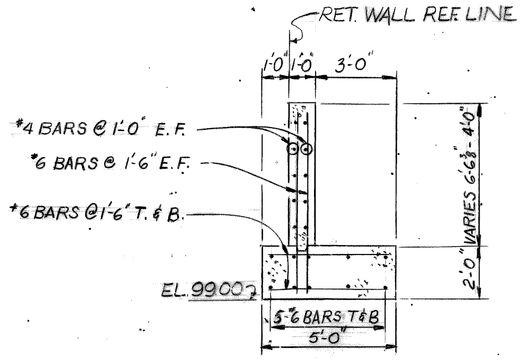

19

revisions	date 8-11-75	approved T.E. Gm-Stowan STRUCTURAL ENGINEER	CITY OF DETROIT CITY ENGINEERING DEPARTMENT
	designed M.C.		
	drawn L.G. 8-74 J.A.E.		
	checked J. Mc Guire		

ATWATER STREET RELOCATION
ATWATER TUNNEL

RETAINING WALL DETAILS

contract no. 07105 A

sheet 9 of 81

drawing no: RW 2

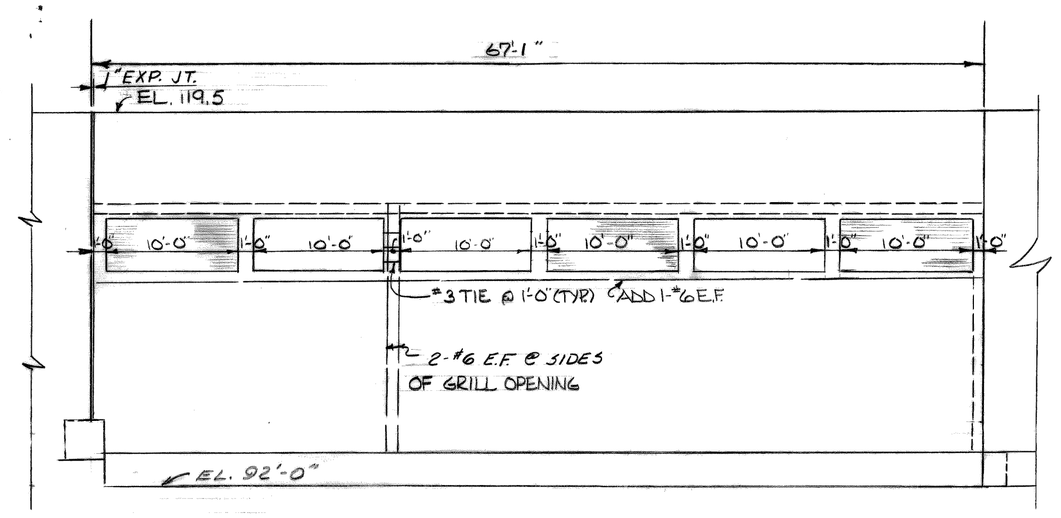

PLENUM WALL ELEVATION
SCALE 1/8" = 1'-0"

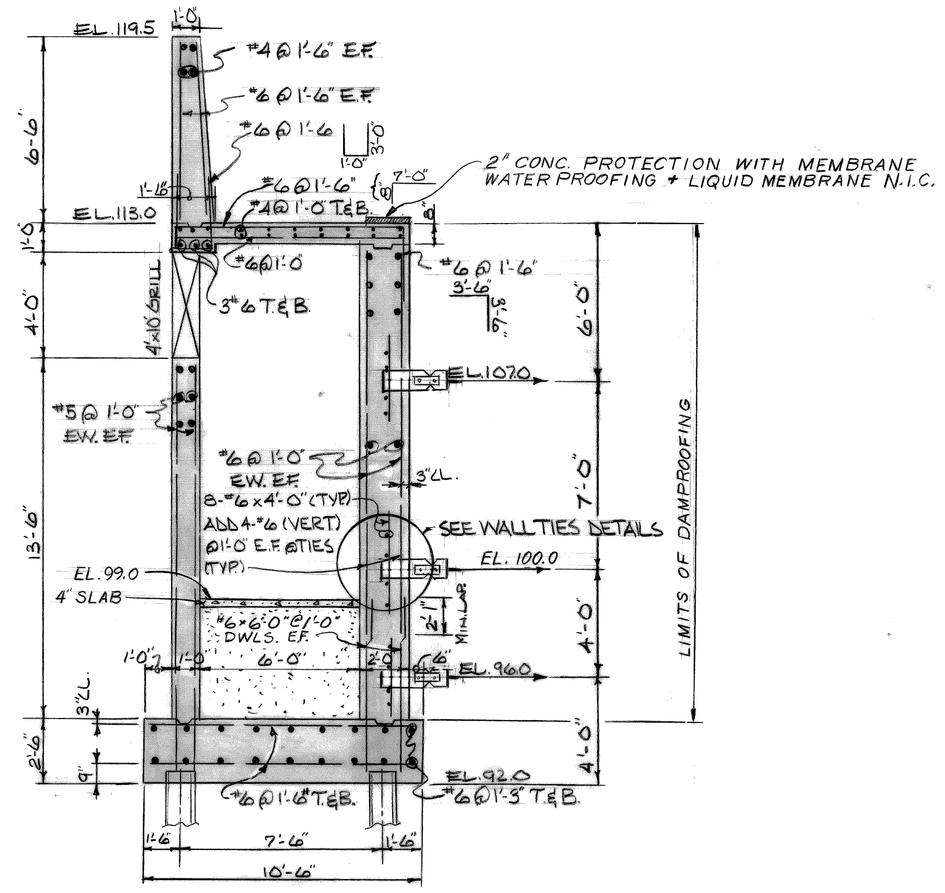

SECTION 15

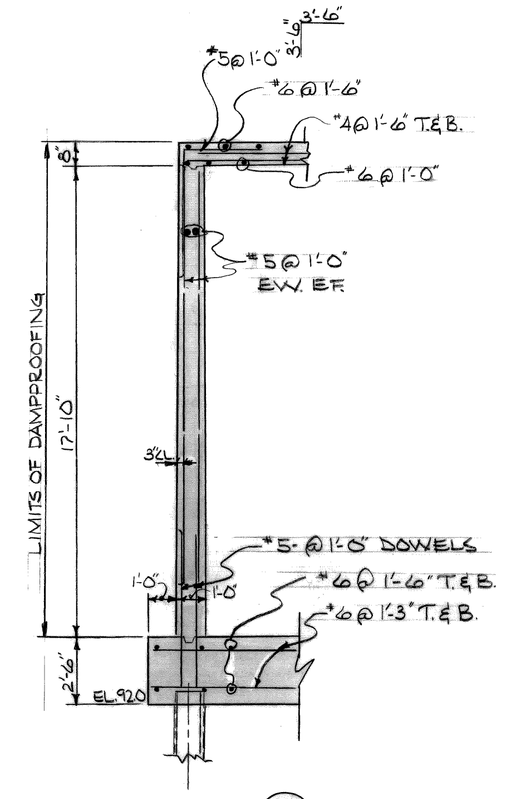

SECTION 16

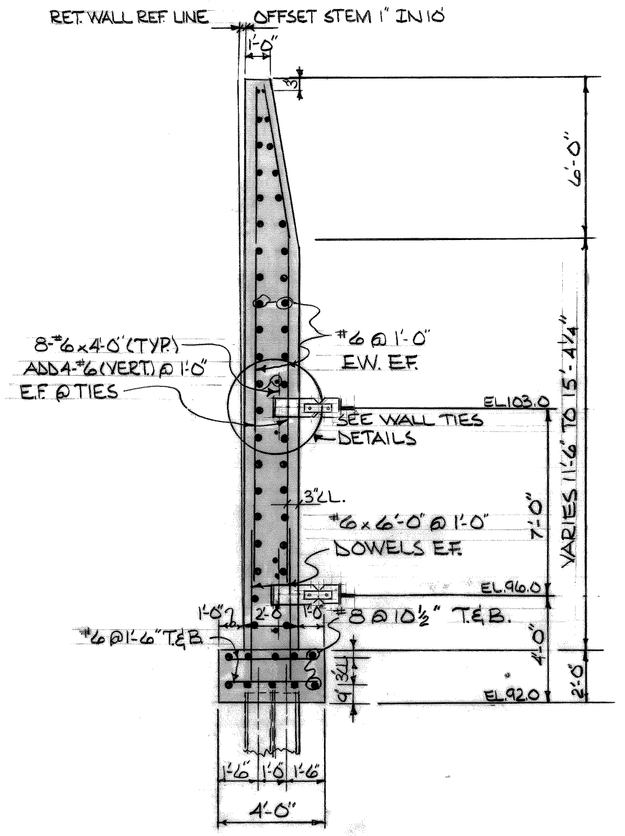

TYPE F
SECTION 17

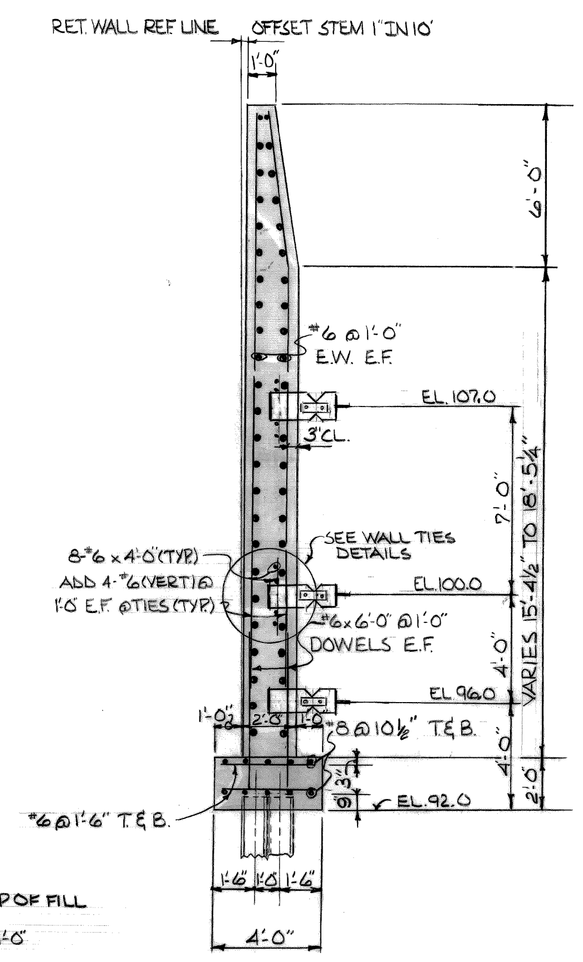

TYPE E
SECTION 18

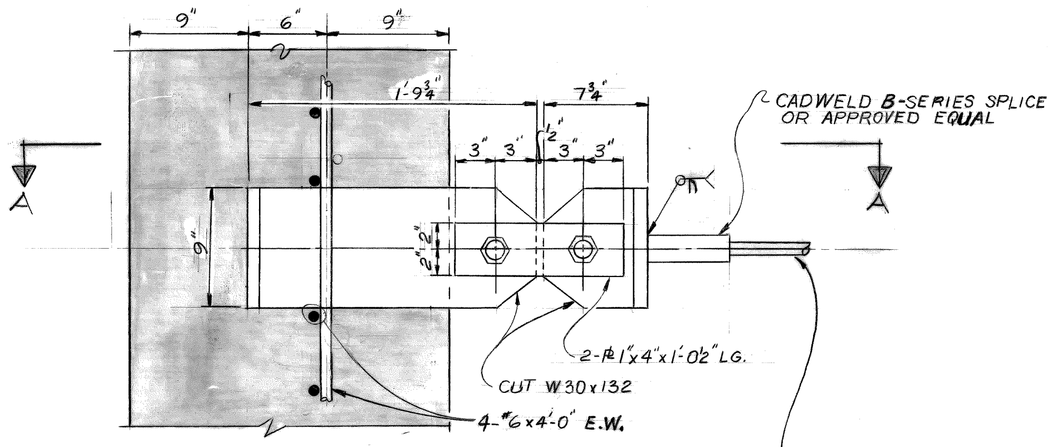

STRUCTURAL TIES DETAILS IN WALL

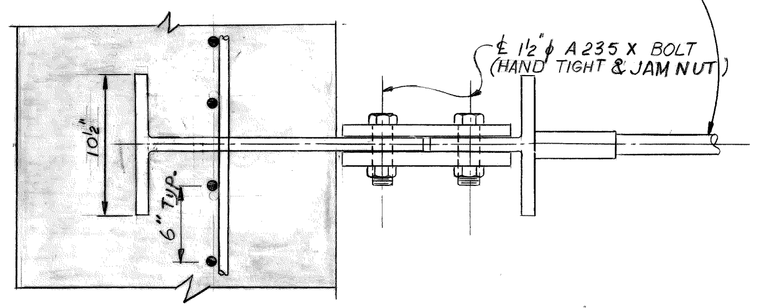

SECTION A-A

NOTES:- STRUCTURAL TIES

REINFORCING BARS FOR STRUCTURAL TIES SHALL BE A.S.T.M. A615 GRADE 60.

REINFORCING BAR FIELD SPLICE SHALL BE CADWELD T-SERIES SPLICE OR APPROVED EQUAL.

ALL SPLICES SHALL BE DONE IN ACCORDANCE WITH THE MANUFACTURERS RECOMENDATIONS AND SPECIFICATIONS.

ALL STRUCTURAL STEEL TO BE A572 GRADE 50

PLACE AND COMPACT BACKFILL TO AN ELEVATION 6" ABOVE EACH TIE. EXCAVATE TRENCH TO 6" BELOW TIE ELEVATION AND INSTALL TIE. WATERPROOF ALL PORTIONS OF THE TIE ROD ASSEMBLY WITH TWO COATS OF HOT ASPHALT OR 1 COAT OF TC MASTIC.

PROVIDE ADEQUATE SUPPORTS DURING TIE ASSEMBLY AND BACKFILLING TO MINIMIZE TIE BAR SAG & MAINTAIN PROPER ALIGNMENT

WRAP TIES AFTER COATING WITH POLYETHYLENE (6 MIL) 6" WIDE - LAP ENDS 12" - TAPE @ 2'-0" CTRS.

NOTES

STOP ⊥W.P. 1'-0" BELOW TOP OF FILL

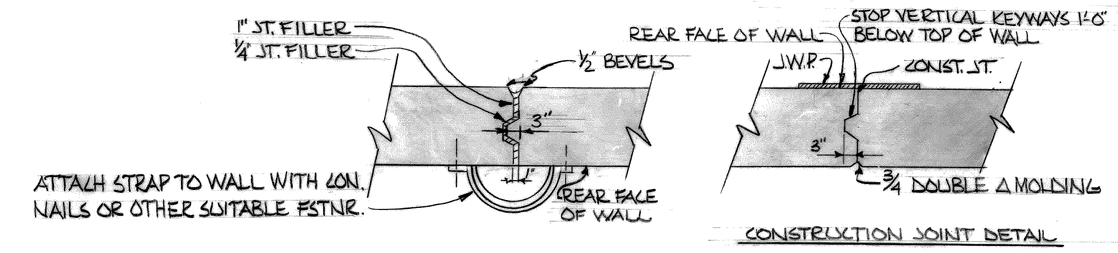

CONSTRUCTION JOINT DETAIL

SECTION B-B

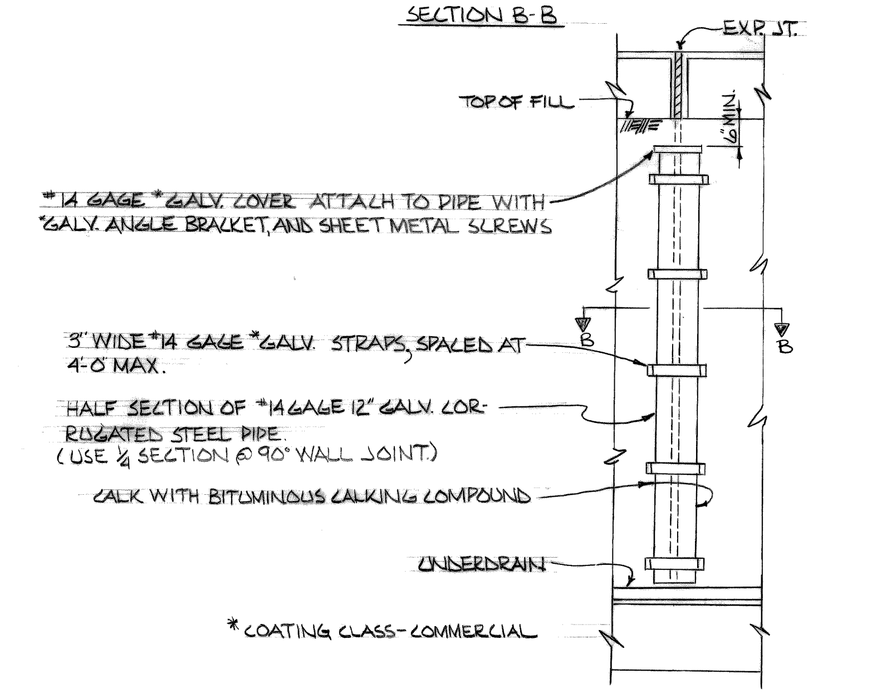

* COATING CLASS-COMMERCIAL

EXPANSION JOINT DRAIN DETAIL

revisions	date 8-11-75	approved T.E. McGowan, STRUCTURAL ENGINEER	CITY OF DETROIT CITY ENGINEERING DEPARTMENT
	designed M.C.		
	drawn J.A.E./L.G.		
	checked J. Mc Guire		

ATWATER STREET RELOCATION
ATWATER TUNNEL
RETAINING WALL DETAILS

contract no. 07105 A

sheet 10 of 81
drawing no: RW 3

BRUNING 80731 FORM NO. 393-SH

NOTE:
COORDINATE SYSTEM ORIGIN
℄ JEFFERSON AVE. & 60' WEST OF EAST ℄ OF WOODWARD AVE.

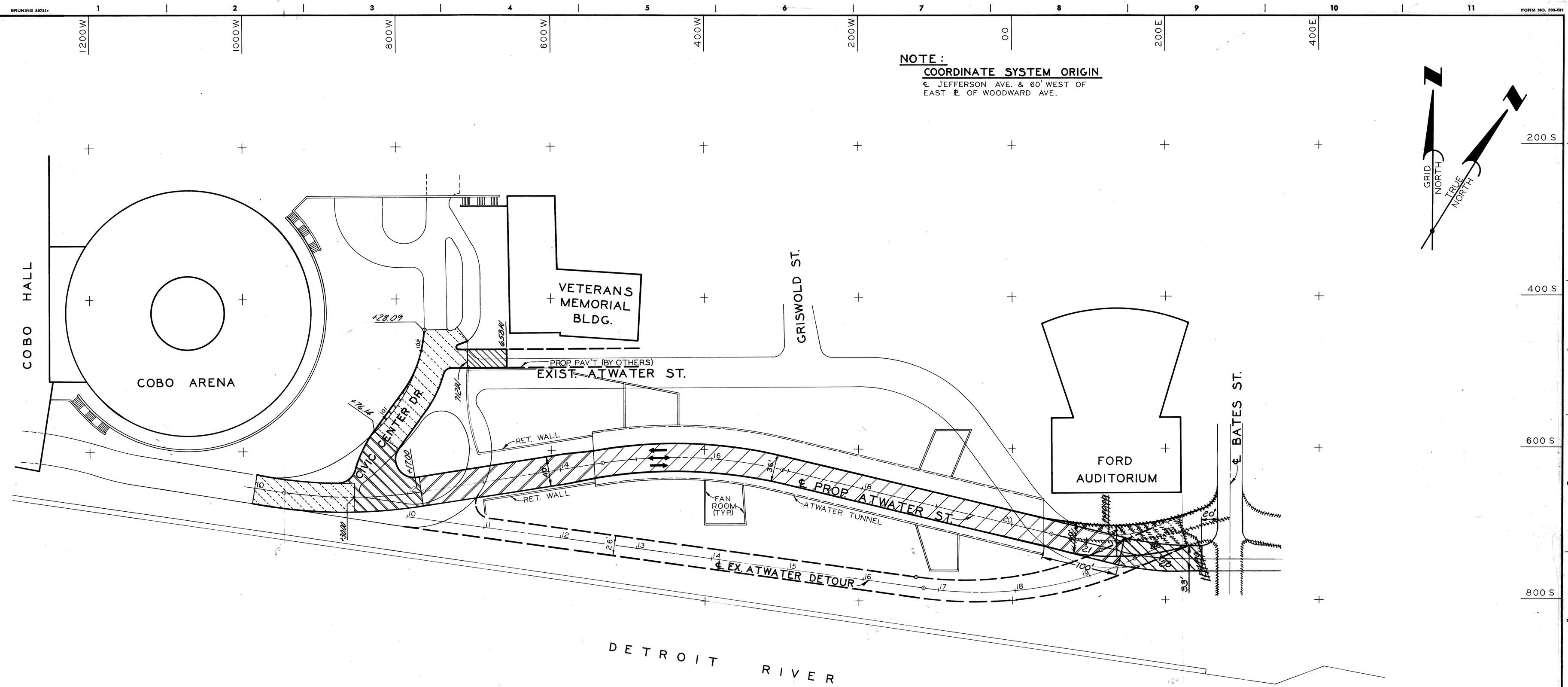

LEGEND

- Conc. Pav't-Double Reinf.-9"
- Conc. Pav't-Double Reinf.-9" with Integral Curb
- 2" min. Bit. Surface on Conc. Base Course-Non Reinf.-9" with Integral Curb
- 2¾" Bituminous Resurfacing
- Conc. Pav't-Reinf.-9" with Integral Curb

PLAN
SCALE: 1" = 60'

CODE	DESCRIPTION	DRN	CKD	APVD	DATE
E9	REVISED ALIGNMENT & PAV'T. COMPOSITION-E. END ATWATER	WB	RP		12/17/75

REVISIONS LOCATED BY COORDINATES ON SHEET

REFERENCE DRAWINGS

DESIGNED BY	
DRAWN BY	J. R. D.
TRACED BY	
CHECKED BY	COMLY

APPROVED: Allen E. Rieger
ENGINEER OF EXPRESSWAYS

CITY OF DETROIT
CITY ENGINEERING DEPARTMENT

CIVIC CENTER PLAZA
ATWATER ST. RELOCATION

GENERAL PLAN

SHEET 11 OF 81 SHEETS
CONTRACT No. 07105A
ASSIGNMENT No. 2102 (B) X
DATE 8-11-75

R-1

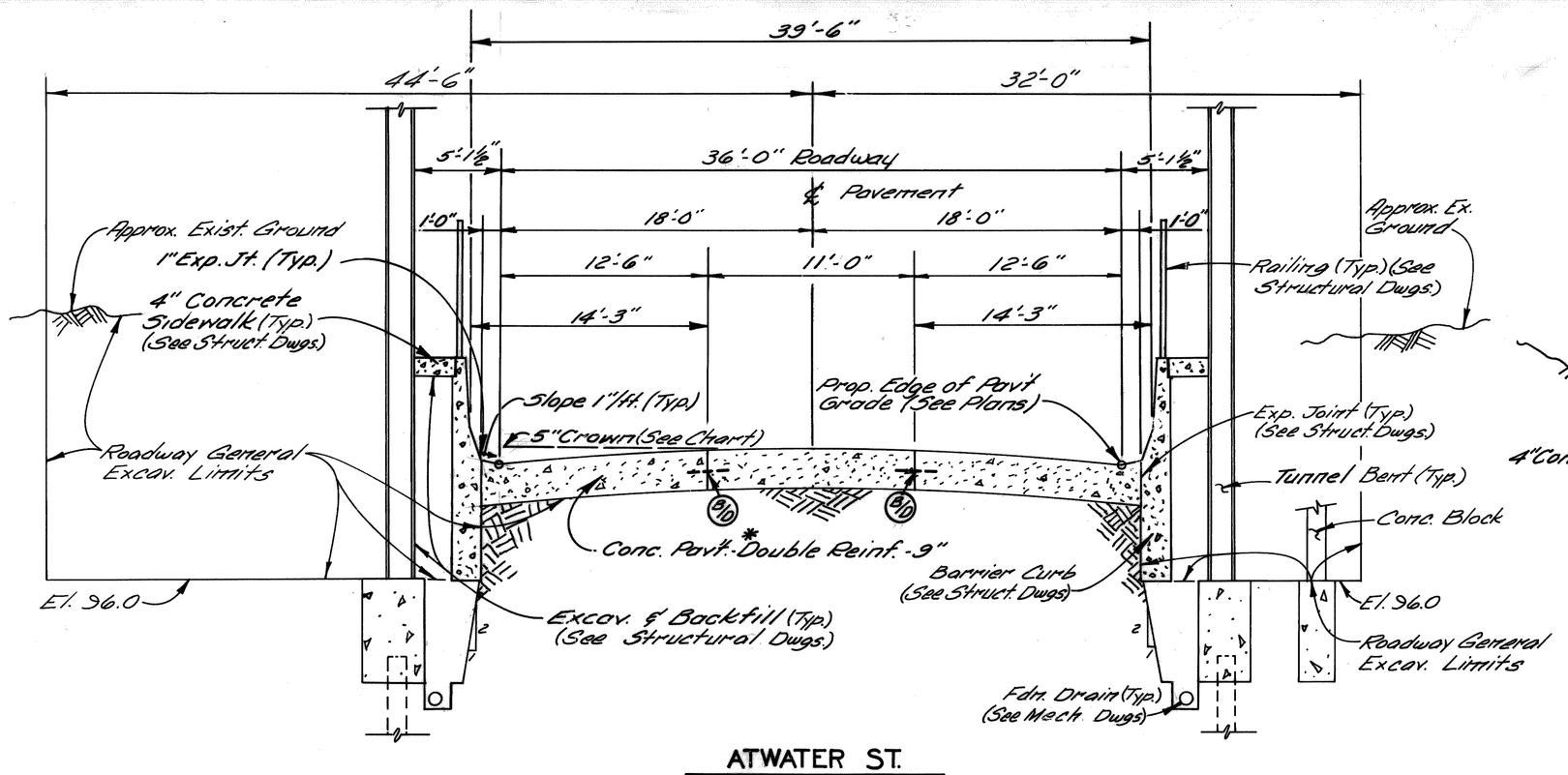

ATWATER ST.
SECTION IN TUNNEL
NO SCALE

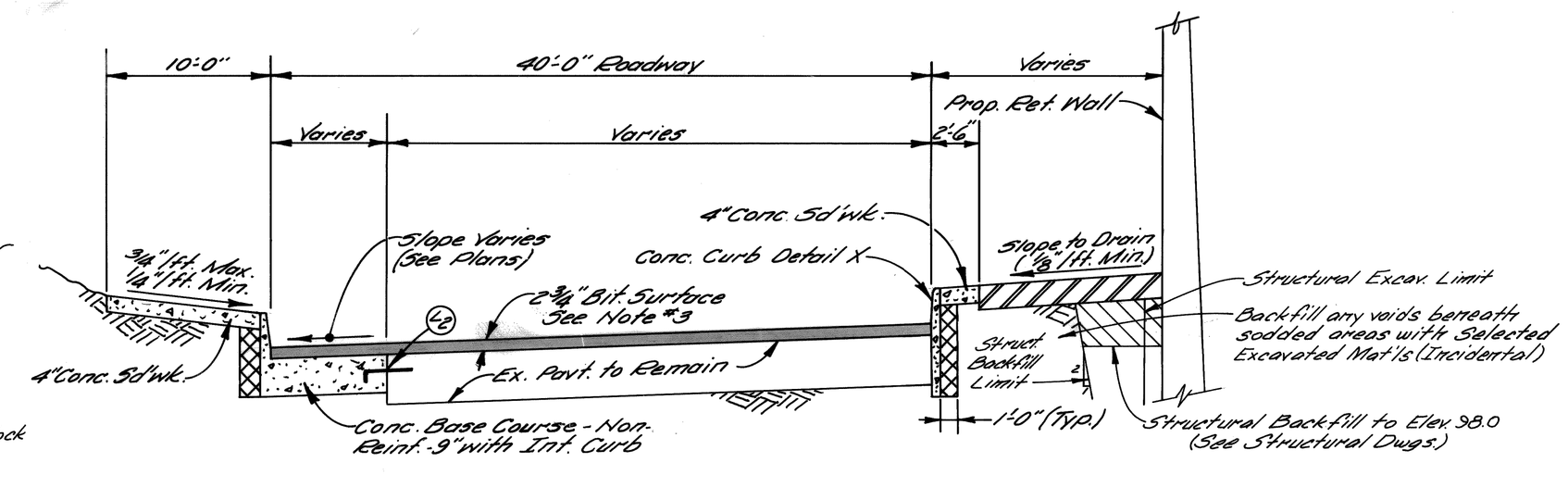

CIVIC CENTER DRIVE
NO SCALE

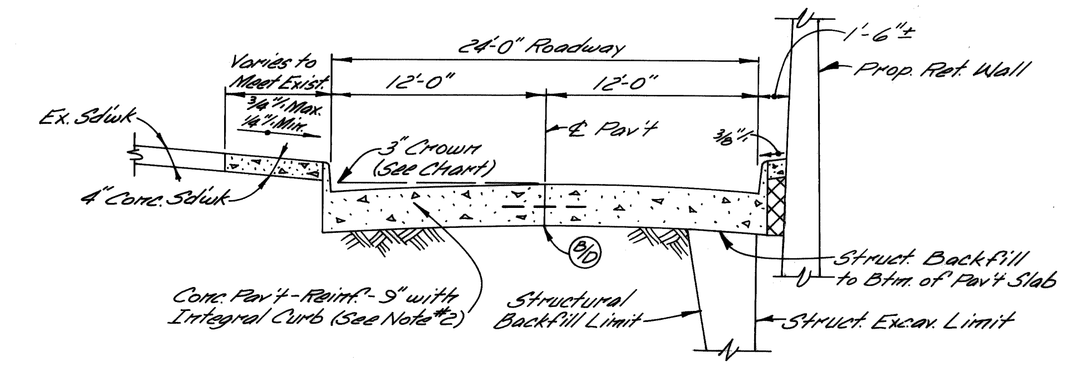

VETERANS MEMORIAL DRIVEWAY
NO SCALE

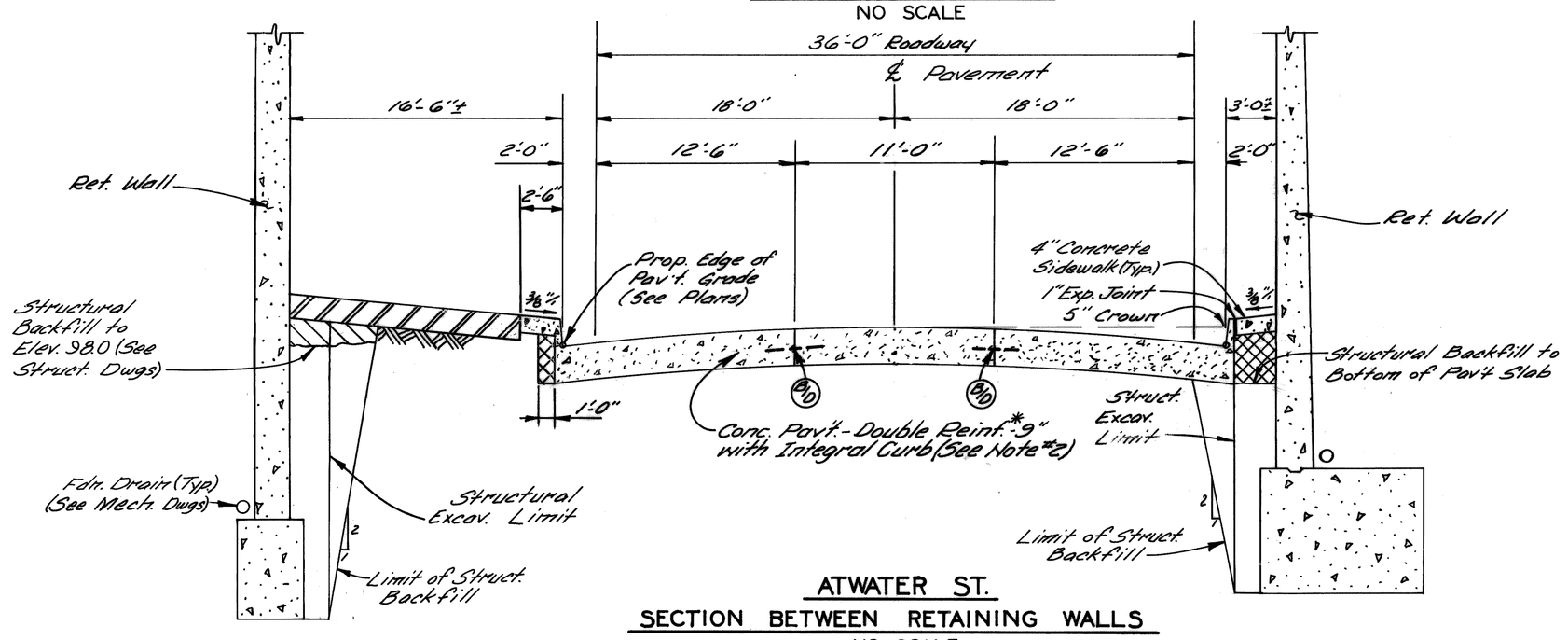

ATWATER ST.
SECTION BETWEEN RETAINING WALLS
NO SCALE

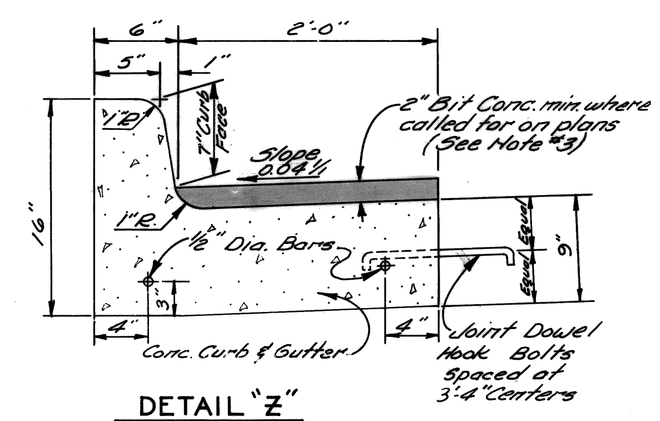

DETAIL "Z"
SEPARATE CURB AND GUTTER
NO SCALE

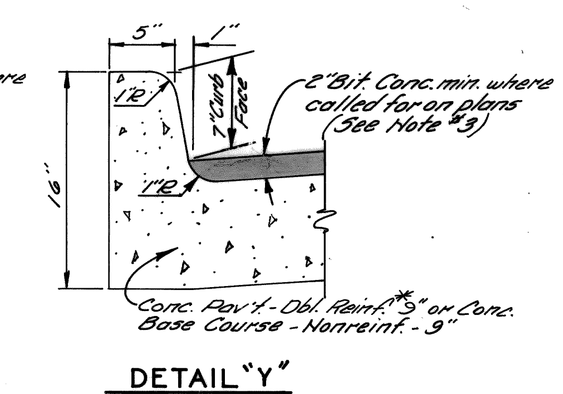

DETAIL "Y"
INTEGRAL CURB AND GUTTER
NO SCALE

EARTHWORK LEGEND

- Granular Mat'l Class II (Incidental to Cont. Cost)
- Class "A" Sodding with 4" Topsoil Surface
- Selected Excavated Materials (Incidental to Contract Cost)

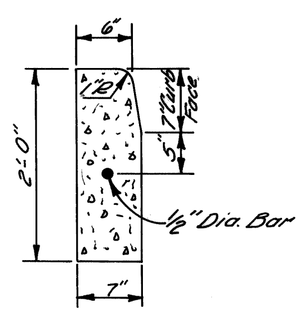

CONC. CURB DETAIL "X"
NO SCALE

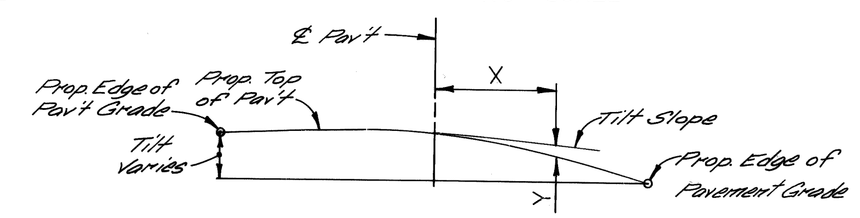

DIST. FROM ℄ PAV'T (X) FT.	CROWN (Y) IN INCHES			
	36' ROADWAY (IN TUNNEL)	40' ROADWAY (NORMAL)	24' ROADWAY (MEM. DRIVEWAY)	33' ROADWAY (NORMAL)
2	1/16	1/16	1/16	1/16
4	1/4	3/16	5/16	1/4
6	9/16	7/16	3/4	9/16
8	1	13/16	1 5/16	15/16
10	1 9/16	1 1/4	2 1/16	1 1/2
12	2 1/4	1 13/16	3	2 3/16
14	3	2 7/16	—	3
16	3 13/16	3 3/16	—	3 7/8
18	5	4 1/16	—	16.5' — 4 1/8
20	—	5	—	—

CROWN CHART

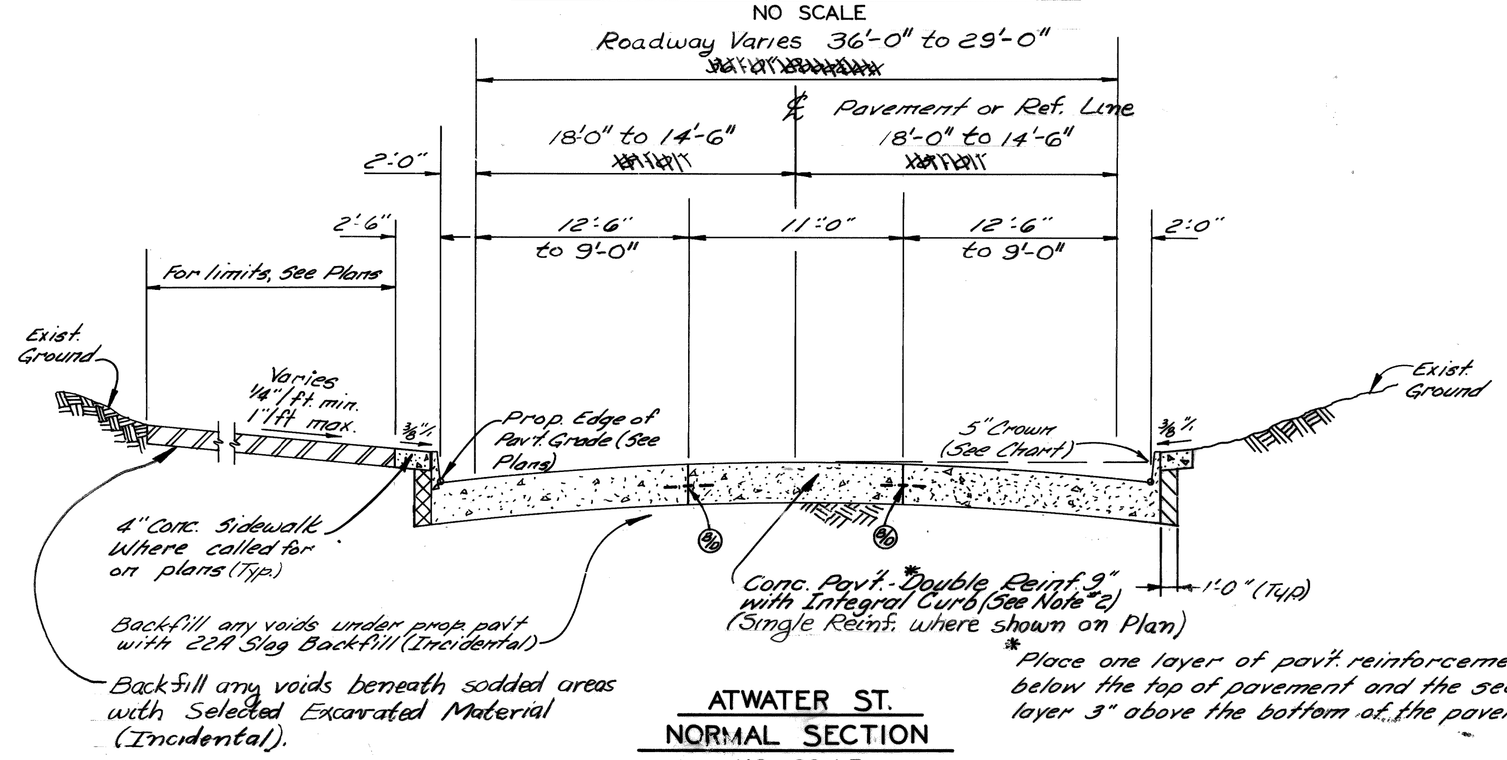

ATWATER ST.
NORMAL SECTION
NO SCALE

* Place one layer of pav't reinforcement 3" below the top of pavement and the second layer 3" above the bottom of the pavement.

JOINT LEGEND

- (B) Longitudinal Bulkhead Construction Joint, according to M.D.S.H. Std. Dwg. II-39B
- (D) Longitudinal Lane Tie Joint with Tie Bar, according to M.D.S.H. Std. Dwg. II-39B
- (B/D) Optional, B or D
- (L2) Longitudinal Bulkhead Construction Joint according to M.D.S.H. Std. Dwg. II-39B

NOTES:

1. It is estimated that approximately 1000 Cu. Yds. of Subgrade Undercutting with 22A Slag Backfill will be required for this contract.
2. The proposed curb shall be Integral Curb & Gutter (See Detail "Y" this sheet) with Separate Concrete Curb & Gutter Detail "Z" as an alternate.
3. For resurfaced areas and/or bituminous on new conc. base areas the Bituminous Surface shall consist of the following:

ITEM	APPL. RATE	APPROX. THICK	ASPH. PENET.
Bit. Conc. Wearing Course (3/4A) Type F	110#/S.Y.	1 Inch	85-100
Bit. Conc. Leveling Course (25A)	110#/S.Y./In.	Varies - 1" Min.	85-100
Bit. Bond Coat®	0.15 Gal/S.Y. on prepared surface 0.05 Gal/S.Y. between bit. layers		

® Incidental to Contract Cost

revisions	date	approved	CITY OF DETROIT CITY ENGINEERING DEPARTMENT		contract no.	sheet 12 of 81
12/9/76 REVISED DIMENSIONS ON ATWATER NORMAL SECTION, ADDED SINGLE REINF. NOTE, ADDED 33' NORMAL ROADWAY TABLE TO CROWN CHART	designed Comly	ENGINEER OF EXPRESSWAYS		CIVIC CENTER PLAZA ATWATER ST RELOCATION	07105A	ASSIGNMENT No. 2102 (B) X
	drawn Sucech			TYPICAL CROSS - SECTION	R-2	
	checked					

BRUNING 80731-
FORM NO. 393-

NOTE:
COORDINATE SYSTEM ORIGIN
℄ Jefferson Ave. & 60' W. of
E. R/W of Woodward Ave.

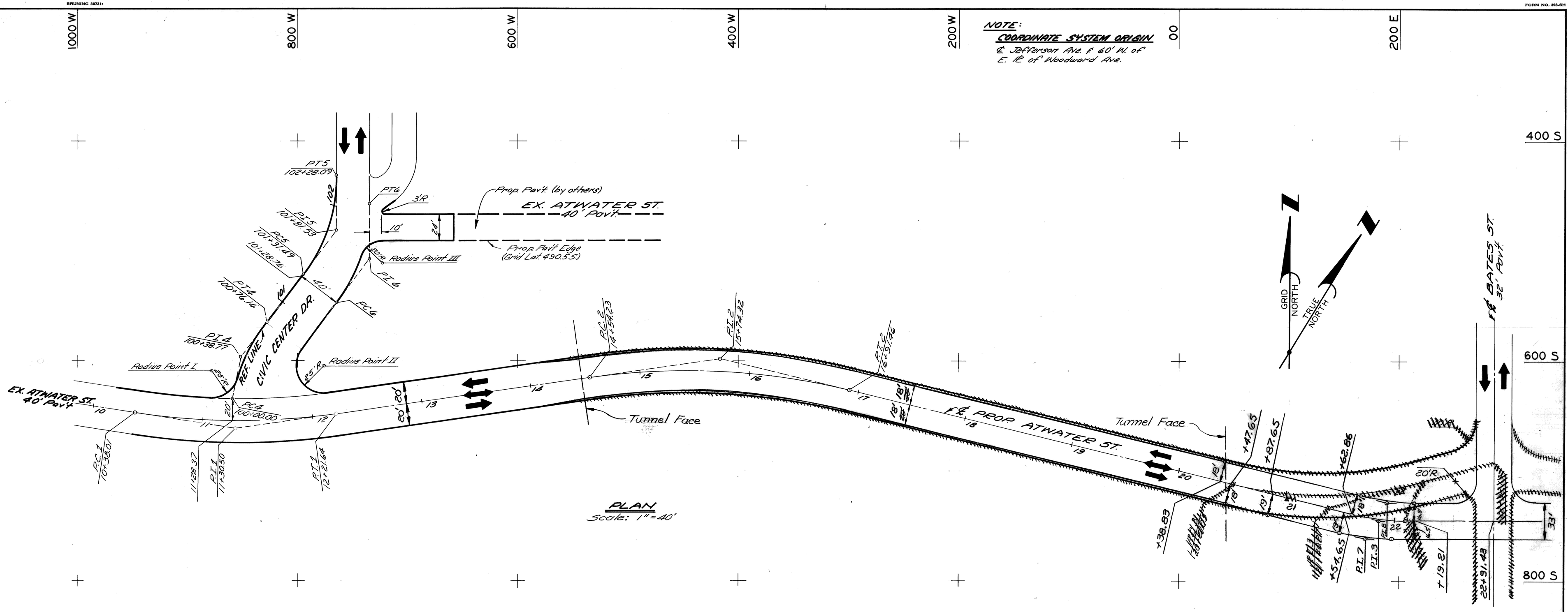

PLAN
Scale: 1" = 40'

MISCELLANEOUS COORDINATES					
POINT	LATITUDE	DEPARTURE	POINT	LATITUDE	DEPARTURE
PC 1	647.00 S	948.37 W	P.C. 3	738.75 S	158.18 E
PT 1	661.17 S	856.97 W	P.T. 3	744.50 S	181.63 E
PT 1	668.04 S	785.42 W	P.T. 3	744.50 S	205.78 E
PC 2	615.04 S	535.18 W	P.C. 7	755.25 S	145.69 E
PT 2	598.00 S	416.31 W	P.T. 7	761.00 S	169.14 E
PT 2	626.58 S	299.67 W	P.T. 7	761.00 S	193.28 E
~~PC 3~~	~~712.15 S~~	~~49.59 E~~	P.C. 8	722.25 S	166.48 E
~~PT 3~~	~~723.30 S~~	~~136.25 E~~	P.T. 8	728.00 S	189.93 E
~~PT 3~~	~~723.30 S~~	~~222.17 E~~	P.T. 8	728.00 S	214.07 E
PC 4	634.30 S	858.23 W	℄ Bates & ℄		
PT 4	596.14 S	851.33 W	Prop. Atwater	744.50 S	286.30 E
PT 4	565.12 S	828.09 W			
Center Curve #4	463.46 S	696.84 W			
PC 5	520.82 S	794.90 W			
PT 5	480.78 S	764.89 W			
PT 5	470.32 S	764.52 W			
Center Curve #5	430.88 S	949.24 W			
PC 6	546.99 S	764.52 W			
PT 6	506.95 S	734.52 W			
PT 6	456.91 S	734.56 W			
Center Curve #6	457.05 S	884.56 W			
Radius Point I	608.80 S	877.76 W			
Radius Point II	604.09 S	776.07 W			
Radius Point III	510.50 S	723.19 W			
~~℄ Bates & ℄ Prop. Atwater~~	~~744.50 S~~	~~286.30 E~~			

CURVE DATA

Curve 1	Curve 2	Curve 7	Curve 8
Δ = 16°-58'-09.6"	Δ = 21°-55'-23.3"	Δ = 13°-45'-58.6"	Δ = 13°-45'-58.6"
D = 9°-14'-28.5"	D = 9°-14'-28.5"	D = 28°-38'-52.4"	D = 28°-38'-52.4"
R = 620.00'	R = 620.00'	R = 200.00'	R = 200.00'
T = 92.49'	T = 120.08'	T = 24.14'	T = 24.14'
L = 183.63'	L = 237.23'	L = 48.05'	L = 48.05'
E = 6.86'	E = 11.52'	E = 1.45'	E = 1.45'
P.C. = 10+38.01	P.C. = 14+54.23	P.C. = —	P.C. = —
P.T. = 11+30.50	P.T. = 15+74.32	P.I. = —	P.I. = —
P.T. = 12+21.64	P.T. = 16+91.46	P.T. = —	P.T. = —

Curve 3	Curve 4	Curve 5	Curve 6
Δ = 13°-45'-58.6"	Δ = 26°-36'-04.2"	Δ = 36°-53'-49.4"	Δ = 36°-53'-49.4"
D = 28°-38'-52.4"	D = 34°-56'-11.2"	D = 38°-11'-49.9"	D = 38°-11'-49.9"
R = 200.00'	R = 164.00'	R = 150.00'	R = 150.00'
T = 24.14'	T = 38.77'	T = 50.04'	T = 50.04'
L = 48.05'	L = 76.14'	L = 96.60'	L = 96.60'
E = 1.45'	E = 4.52'	E = 8.13'	E = 8.13'
P.C. = 21+62.86	P.C. = 100+00.00	P.C. = 101+31.49	P.C. = —
P.I. = 21+87.00	P.I. = 100+38.77	P.I. = 101+81.53	P.I. = —
P.T. = 22+10.91	P.T. = 100+76.14	P.T. = 102+28.09	P.T. = —

Curve 3
Δ = 23°-20'-30.6"
D = 16°-57'-06.1"
R = 102.00'
T = 43.93'
L = 74.57'
E = 7.51'
P.C. = 20+57.05
P.I. = 21+01.47
P.T. = 21+32.36

COOR'D	DESCRIPTION	DR'N	CK'D	APV'D	DATE
—	CHANGED ATWATER ALIGN. AT W.B. & EAST END. ADDED CURVE AND COORD. DATA FOR CURVES 3, 7 & 8. CORRECTED TUNNEL ROADWAY WIDTH TO 36'.	RP			2/6/76

REVISIONS LOCATED BY COORDINATES ON SHEET

REFERENCE DRAWINGS

DESIGNED BY
DRAWN BY Dresdam
TRACED BY
CHECKED BY Comly

APPROVED: Allen E. Rogers
ENGINEER OF EXPRESSWAYS

CITY OF DETROIT
CITY ENGINEERING DEPARTMENT

CIVIC CENTER PLAZA
ATWATER ST. RELOCATION

ALIGNMENT

SHEET 13 OF 81 SHEETS
CONTRACT No. 07105A
ASSIGNMENT No. 2102 (B) X
DATE 8-11-75

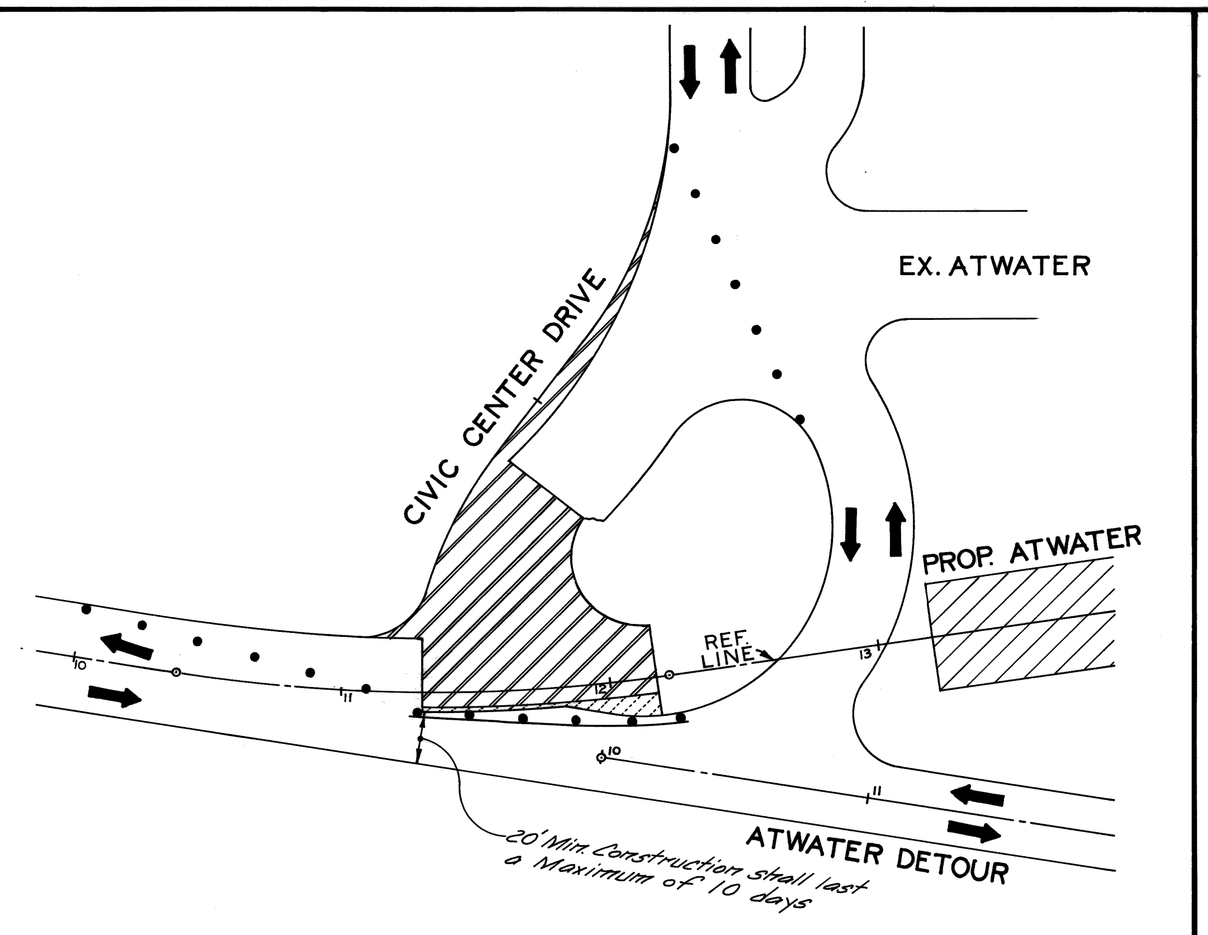

STAGE I
(WEST END)

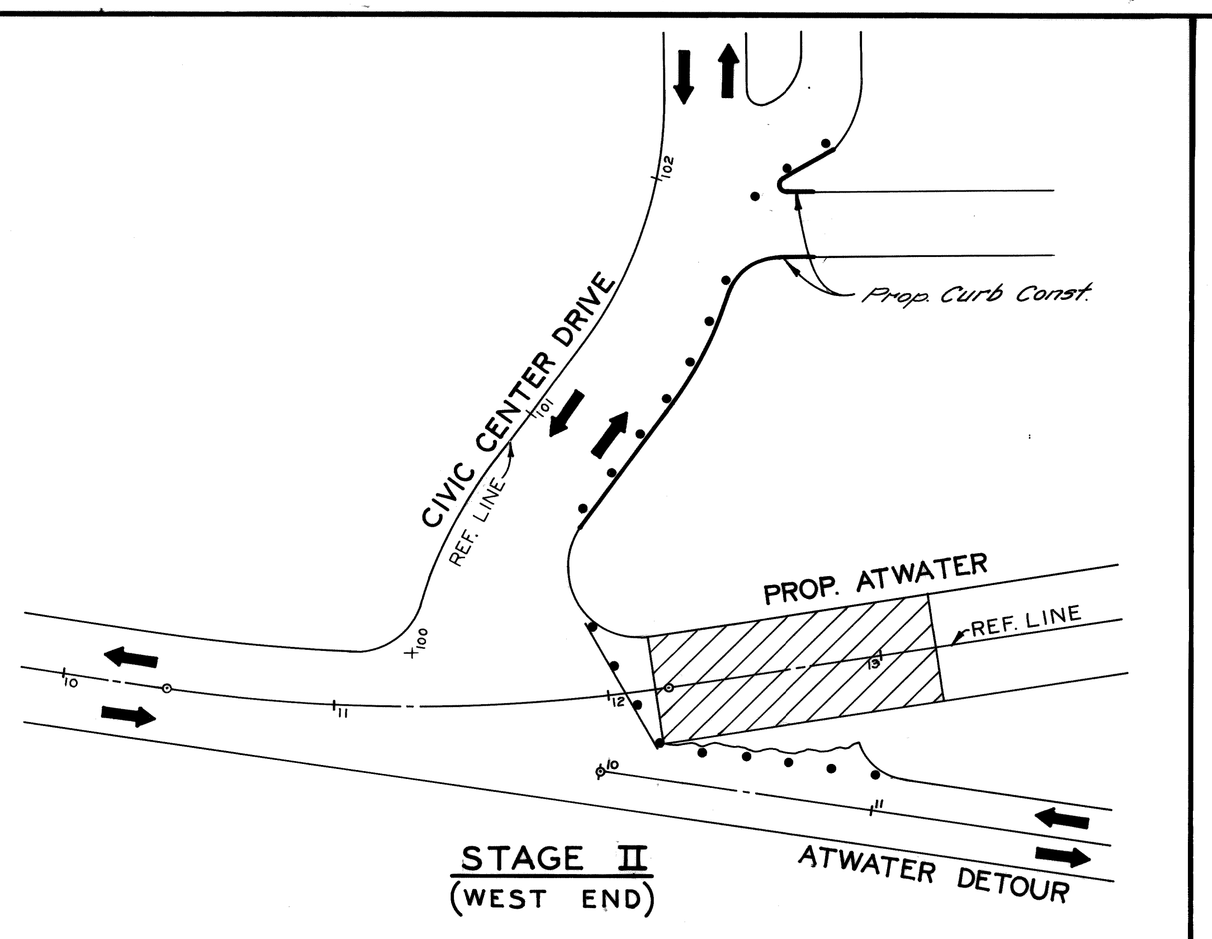

STAGE II
(WEST END)

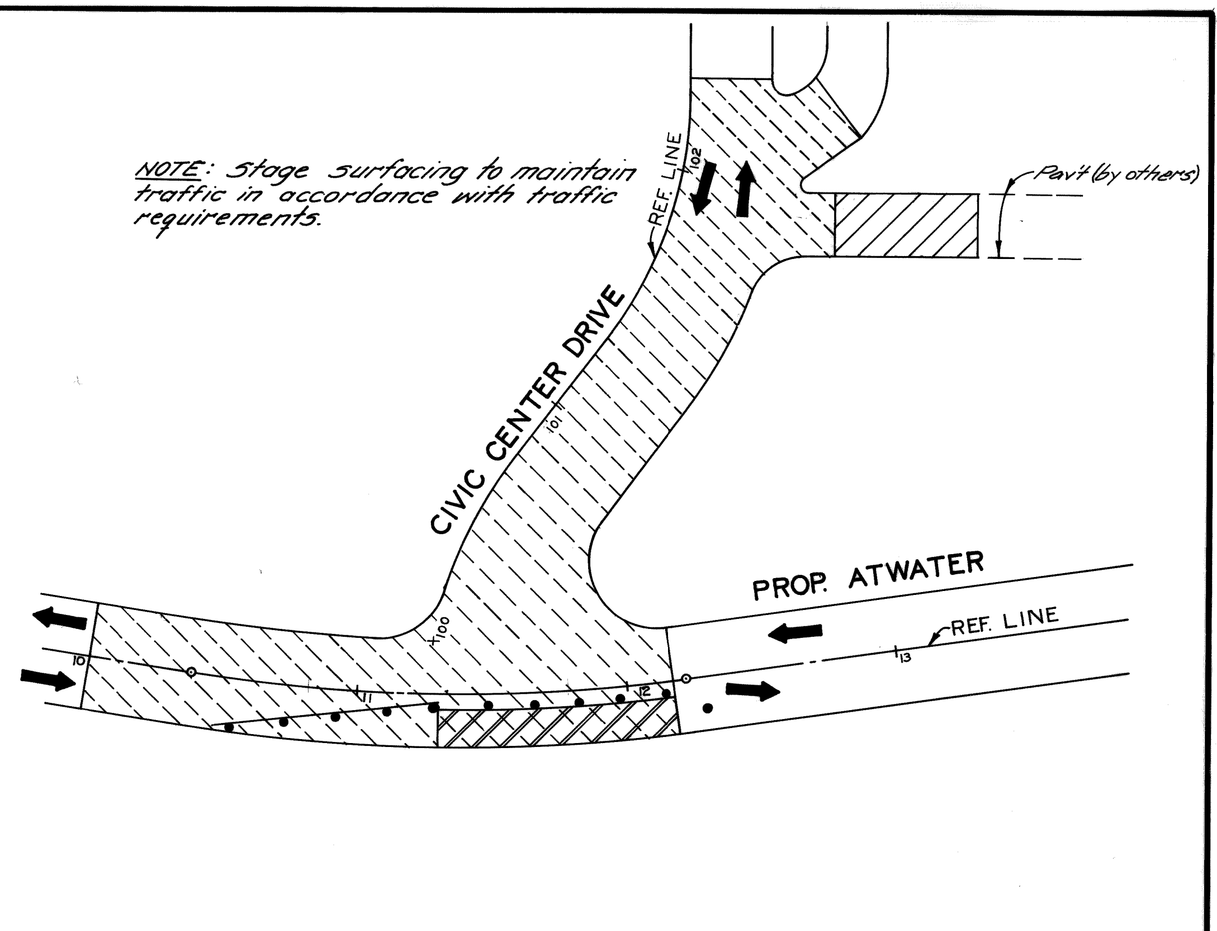

STAGE III
(WEST END)

LEGEND

- Concrete Pavement Construction
- Concrete Base Course Construction
- Temporary Concrete Pavement - Nonreinf - 8"
- Bituminous Surfacing
- Type II Barricade (Drums) - Lighted
- Drum Guide Rail

Scale: 1" = 40'

GRID NORTH
TRUE NORTH

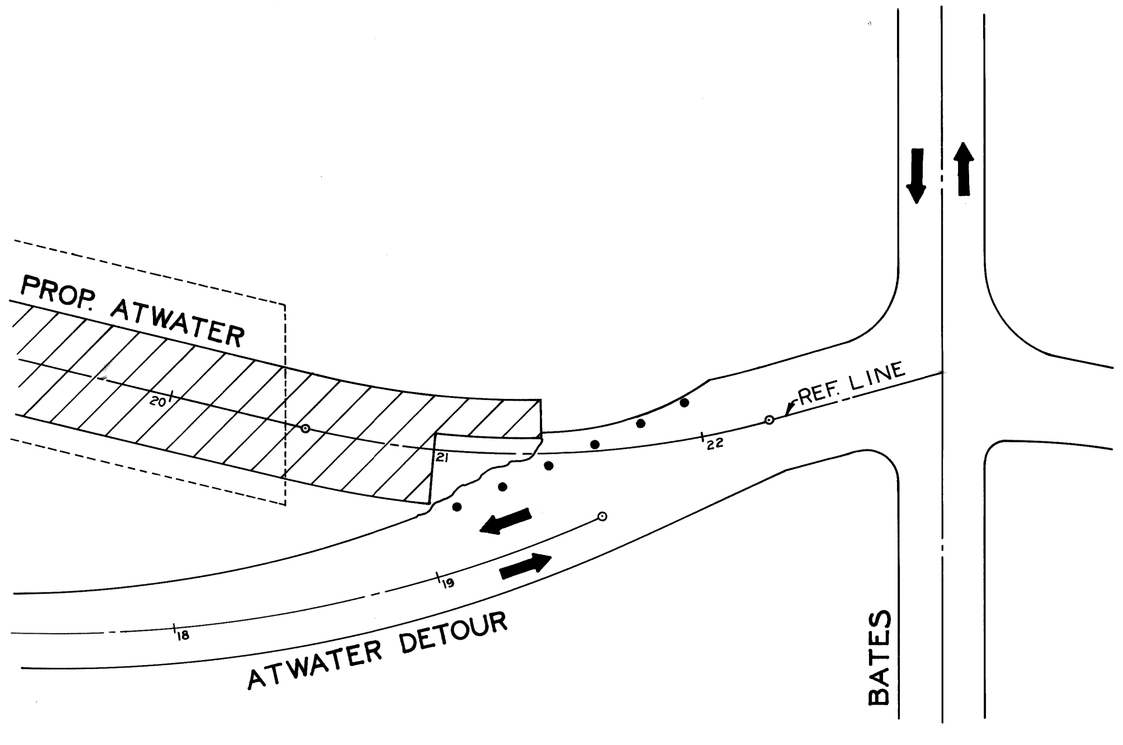

STAGE I
(EAST END)

NOTE: STAGING OF THE EAST END OF ATWATER AT BATES IS DELETED.

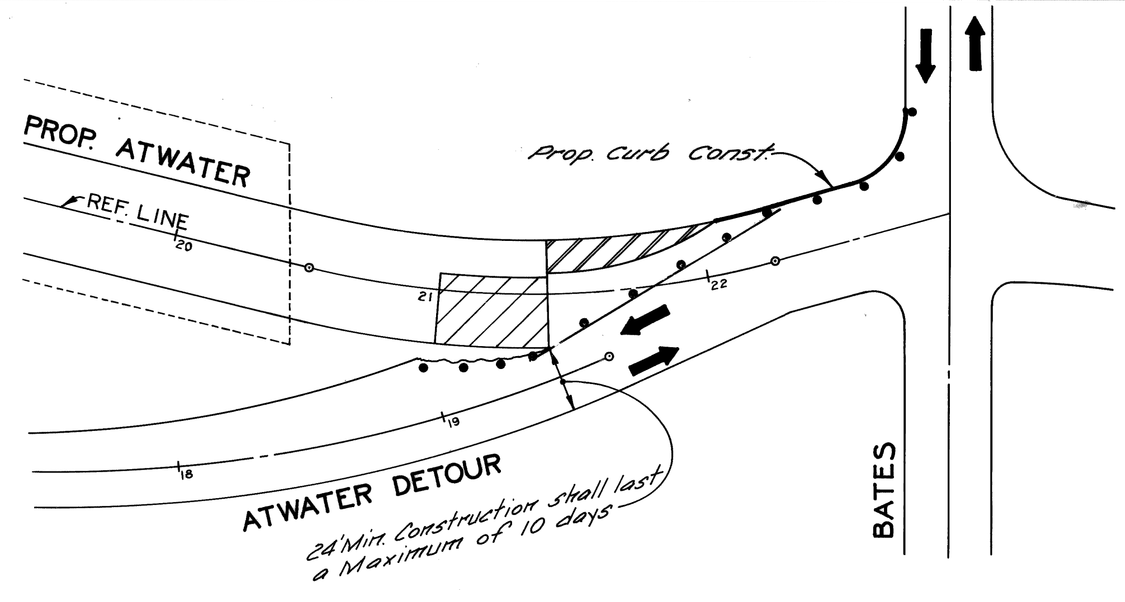

STAGE II
(EAST END)

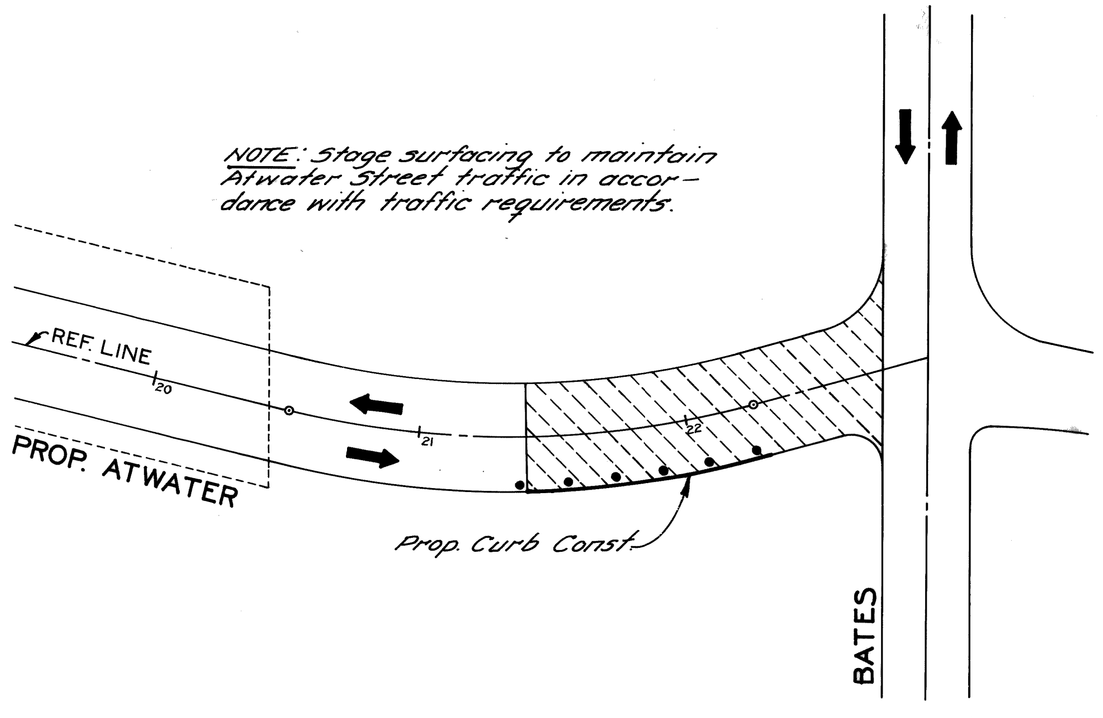

STAGE III
(EAST END)

12/9/76	NOTE ADDED RE; STAGING AT EAST END
revisions	

date	8-11-75
designed	Comly
drawn	Polito
checked	Comly

approved
ENGINEER OF EXPRESSWAYS

CITY OF DETROIT
CITY ENGINEERING DEPARTMENT

CIVIC CENTER PLAZA
ATWATER ST. RELOCATION

CONSTRUCTION SEQUENCE

contract no. 07105A
R-4

sheet 14 of 81
ASSIGNMENT No. 2102 (B) X

BRUNING 80751

FORM NO. 393-SH

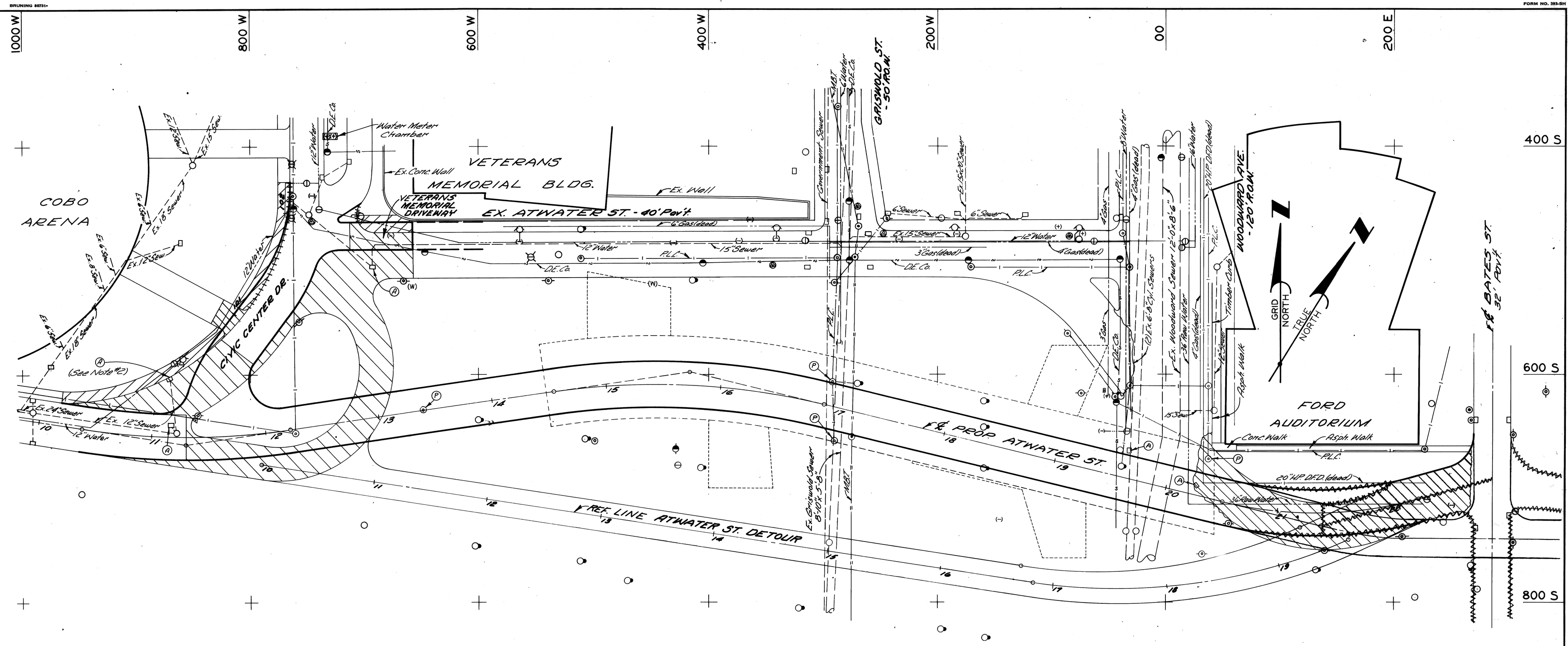

PLAN

Scale: 1" = 40'

LEGEND

- Proposed Pavement or Curb Construction
- Removing Pavement
- Removing Sidewalk
- Removing Curb
- (A) Abandoning Drainage Structures
- (P) Abandon Manhole (Electrical)

NOTES:

1. For Utility Legend, See Sht. # R-9.
2. Maintain Sewer Flow for proposed drainage.
3. The removal of trees less than 8" in diameter is incidental to the contract.

—	REVISED ALIGNMENT, PAV'T. N.B. RP AND CURB REMOVAL AT EAST END OF ATWATER					8/11/75
COORD	DESCRIPTION	DR'N	CK'D	APV'D	DATE	

REVISIONS LOCATED BY COORDINATES ON SHEET

REFERENCE DRAWINGS

DESIGNED BY

DRAWN BY Dresden

TRACED BY

CHECKED BY Comly

APPROVED: Allen E. Pierce
ENGINEER OF EXPRESSWAYS

CITY OF DETROIT

CITY ENGINEERING DEPARTMENT

CIVIC CENTER PLAZA
ATWATER ST. RELOCATION

REMOVALS

SHEET 15 OF 81 SHEETS

CONTRACT No. 07105A

ASSIGNMENT No. 2102 (B) X

DATE 8-11-75

R-5

BRUNING 80231+ FORM NO. 2B5-1

1000 W | 800 W: P.B.M. #28-258 Elev. 101.208 S.W. Corner Vet. Mem. Bldg. | 600 W: C.B.M. Elev. 104.54 Arrow on Hyd. S.W. Corner Atwater & Woodward | 400 W: C.B.M. Elev. 104.28 Arrow on Hyd. N.W. Corner Atwater & Bates | 200 W: C.B.M. Elev. 103.38 Arrow on Hyd. S.W. Corner Atwater & Bates | 00: P.B.M. #28-359 Elev. 100.719 N.W. Corner Atwater & Randolph | 200 E

LEGEND

- New Pavt. or Curb construction limits
- 6" Concrete Sidewalk
- Conc. Pavt.-Nonreinf.-8" (Driveway)
- Exist. Sidewalk or Driveway to Remain
- Strip & Resurface
- (A) Adjusting Drainage Structure Covers.
- (1) Sidewalk Ramps (4' or 6') type (1)

NOTES:

1. For Alignment, See Sh. No. R-3.
2. For Driveway Details, See Sh. No. R-9
3. For Utility Legend, See Sh. No. R-9.
4. For Const. Sequence, See Sh. No. R-4.
5. For Surfacing, See Sh. No. R-1.
6. Curb height may be lowered to 5 inches (Min) there to facilitate margin drainage.
7. Warp grades and change catch basin locations if necessary to miss Structural Tie Bars.
8. All Utility Trenches are Trench Detail 3.
9. Extend Prop. Sewer between Prop. Piles before kinking & expanding to 12" if necessary to avoid conflict. (See Structural Dwgs. for Pile Locations)

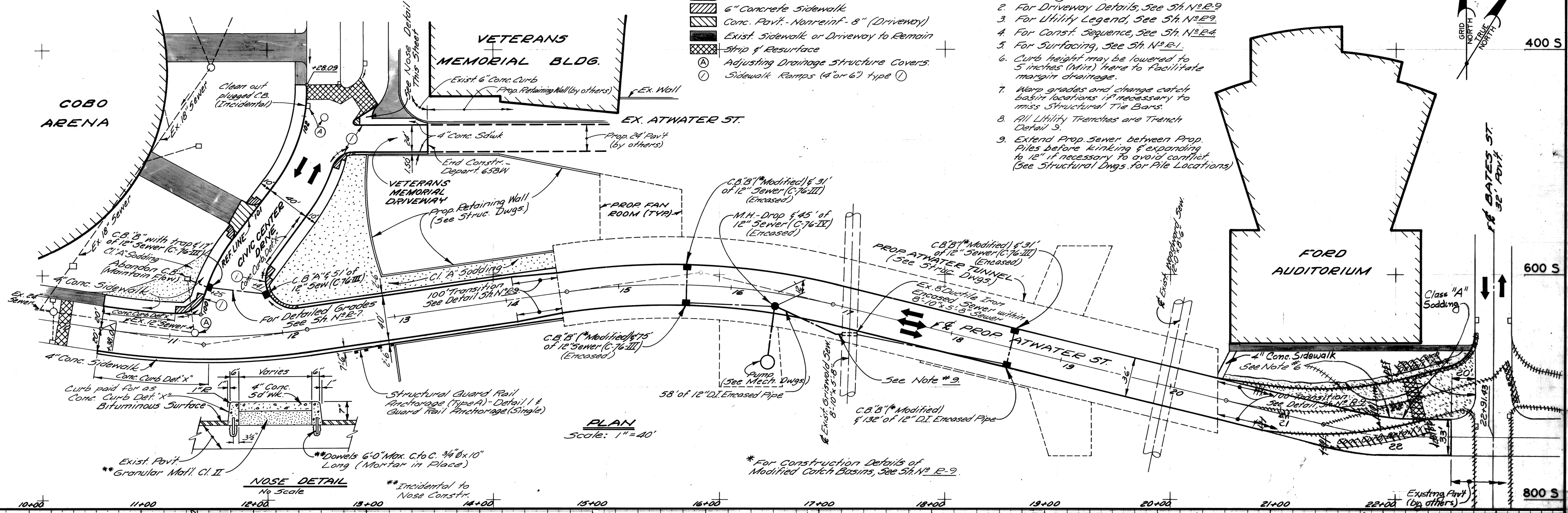

PLAN
Scale: 1" = 40'

NOSE DETAIL
No Scale

** Incidental to Nose Constr.

* For Construction Details of Modified Catch Basins, See Sh. No. R-9.

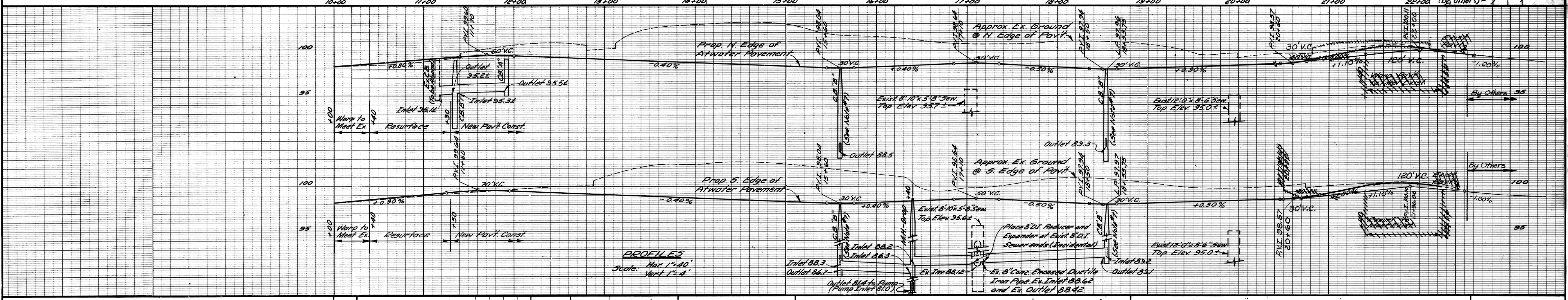

PROFILES
Scale: Hor. 1" = 40'
Vert. 1" = 4'

—	ATWATER ALIGN. & GRADES CHANGED EAST OF TUNNEL	W.B.	RP	12/10/74	
COORD.	DESCRIPTION	DR'N	CK'D	APV'D	DATE

REVISIONS LOCATED BY COORDINATES ON SHEET

REFERENCE DRAWINGS

DESIGNED BY: Comly
DRAWN BY: Pahlo
TRACED BY:
CHECKED BY: Comly

APPROVED: Allen E. Pierson
ENGINEER OF EXPRESSWAYS

CITY OF DETROIT
CITY ENGINEERING DEPARTMENT

CIVIC CENTER PLAZA
ATWATER ST. RELOCATION

PLAN AND PROFILES

SHEET 16 OF 81 SHEETS
CONTRACT No. 07105A
ASSIGNMENT No. 2102 (B) X
DATE 8-11-75

R-6

EDCO• 127M 1-75 59771

SCALE	HORIZONTAL	BOOK	LEVEL
	VERTICAL	NO. PG.	DATE
		PAYING COMPLETED	

BEFORE STARTING CONSTRUCTION.....CONTRACTOR MUST CHECK WITH UTILITIES FOR LOCATIONS OF EXISTING STRUCTURES WHETHER OR NOT INDICATED ON PLANS.

NOTE - FOR SYMBOLS Ⓐ ETC., SEE STANDARD DETAIL DRAWING NO C-4370

BENCH MARKS ELEV

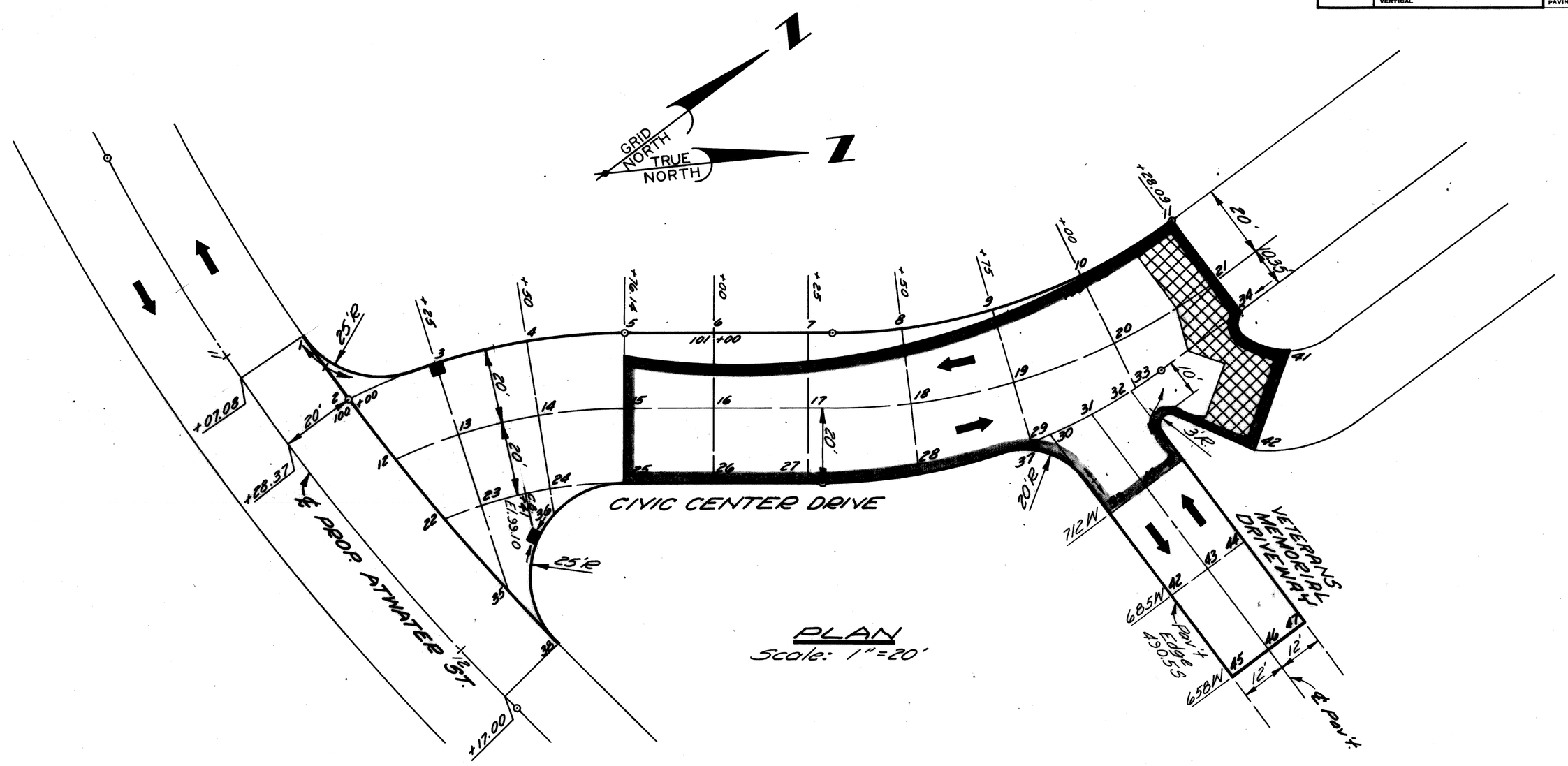

PLAN
Scale: 1" = 20'

PLAN LEGEND

- Detailed Grade Limits
- Resurface Existing Pavement
- Stripping and Resurfacing

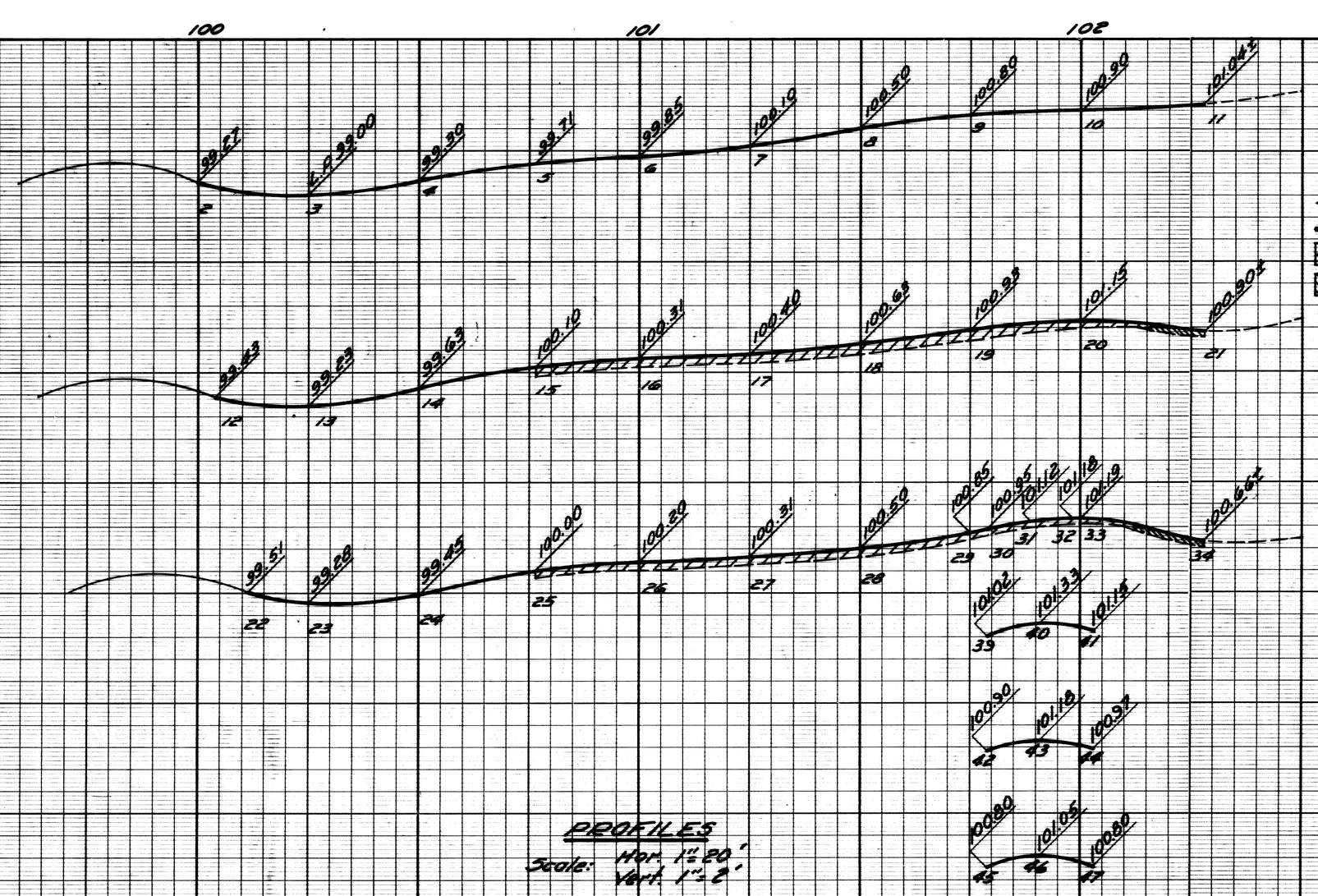

PROFILES
Scale: Hor. 1" = 20'
Vert. 1" = 2'

LEGEND FOR PROFILES & CROSS-SECTIONS

- Existing Pav't Grade
- Proposed Pav't Grade
- Resurface Exist. Pav't
- Stripping & Resurfacing

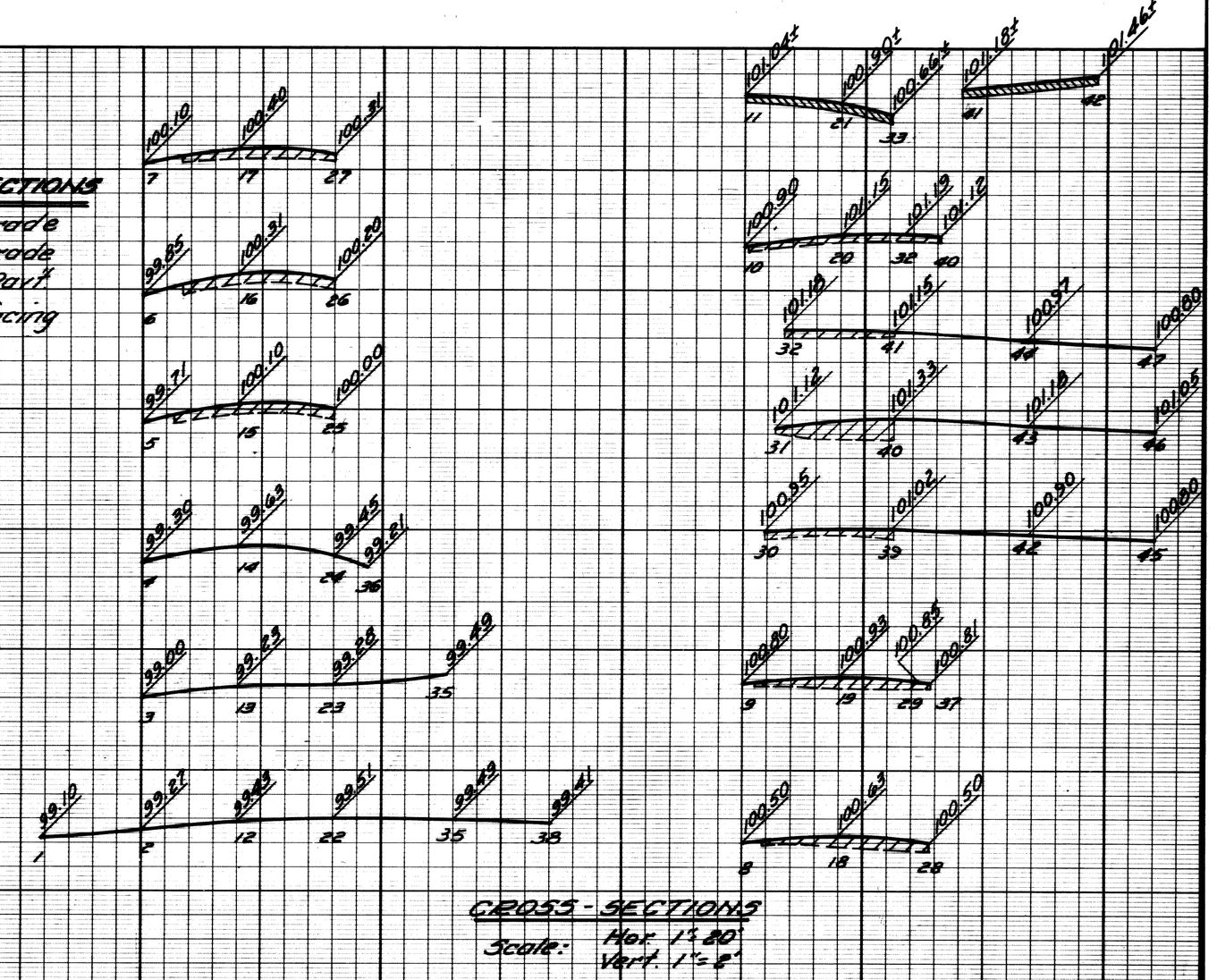

CROSS-SECTIONS
Scale: Hor. 1" = 20'
Vert. 1" = 2'

DESCRIPTION	DR'N	CK'D	AP'VD	DATE
REVISIONS				

	BY	CHECKED BY
PLAN	M.A.P.	COMLY
GRADE	D.R.L.	COMLY
ESTIMATE		
FINAL	CHECK	REVIEW

APPROVED: Allen E. Pruger
ENGINEER OF EXPRESSWAYS

CITY OF DETROIT
CITY ENGINEERING DEPARTMENT

CIVIC CENTER PLAZA
ATWATER ST. RELOCATION

DETAILED GRADES FOR ATWATER ST. AT CIVIC CENTER DR.

INDEX NO. | TOPO NO. | INDEXED

SHEET 17 OF 81 SHEETS
CONTRACT NO. 07105 A
ASSIGNMENT NO. 2102 (B)X
DATE 8-11-75

R-7

BRUNING 50231+ FORM NO. 393-SH

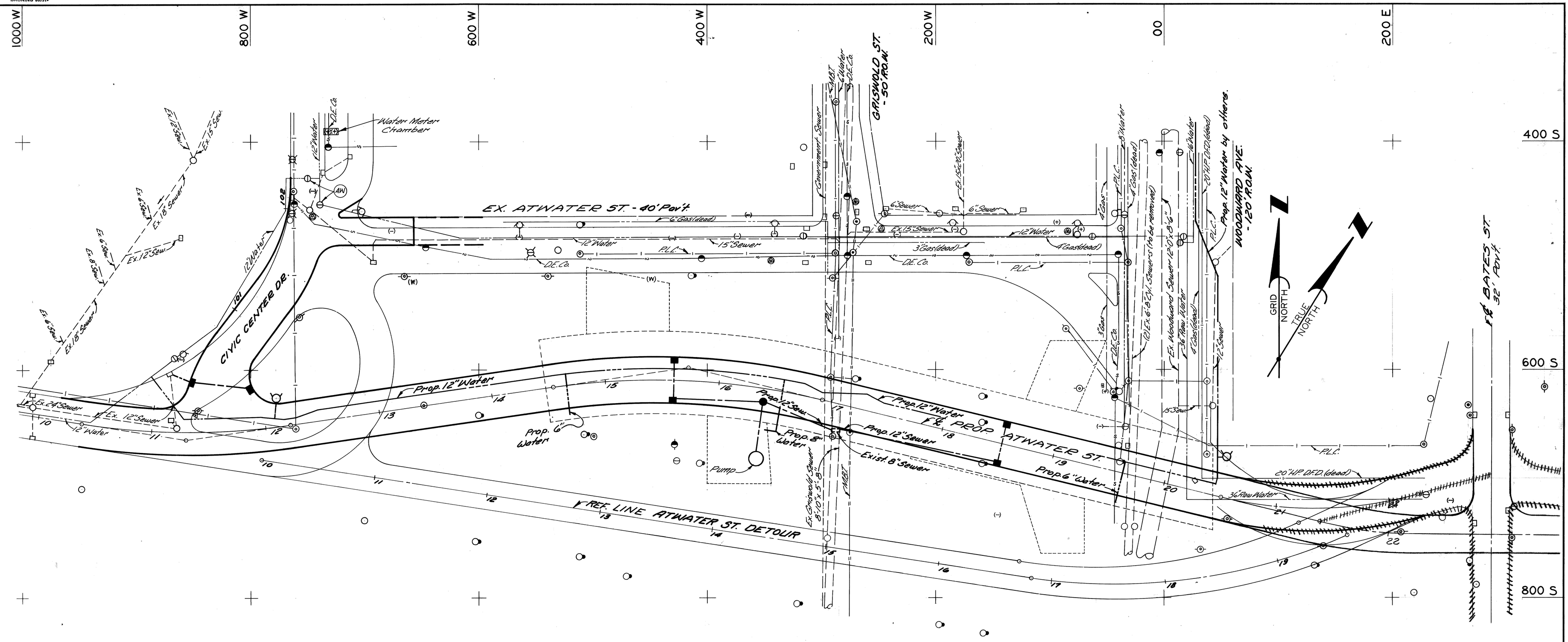

PLAN
Scale: 1" = 40'

LEGEND
(AW) Adjust Gatewell Manhole Cover

NOTES:
1. For Utility Legend, See Sht. # R-2.
2. See "E" Dwgs. For Proposed P.L.D. Duct Runs.
3. See "M" Dwgs. For Proposed Edge Drains, Etc.

—	AS BUILT	N.W.			3/6/6
—	CHANGED PROPOSED ATWATER ALIGNMENT E. OF TUNNEL	W.B.	RP		2/11/76
CODE'D	DESCRIPTION	DR'N	CK'D	APV'D	DATE

REVISIONS LOCATED BY COORDINATES ON SHEET

REFERENCE DRAWINGS

DESIGNED BY
DRAWN BY Dresden
TRACED BY
CHECKED BY Comly

APPROVED: Allen E. Rieger
ENGINEER OF EXPRESSWAYS

CITY OF DETROIT

CITY ENGINEERING DEPARTMENT

CIVIC CENTER PLAZA
ATWATER ST. RELOCATION

UTILITY PLAN

SHEET 18 OF 81 SHEETS
CONTRACT No. 07105A
ASSIGNMENT No. 2102 (B) X
DATE 8-11-75

COLOR	SYMBOL	DESCRIPTION
BLACK		PROPERTY AND LOT LINES
"		PROPOSED CURB LINES AND HEADERS AT RETURNS
"		EXISTING CURB LINES OR EDGE OF PAVEMENT.
"		PROPOSED CURB OR PAVING ON INTERSECTING STREET
"		PROPOSED SEWER TO CATCH BASINS
	12"CR. INV. ELEV. 15"CR.	EXISTING LATERAL SEWERS
	4'-6"CR. 5'-0"CR.	EXISTING PUBLIC SEWERS
		EXISTING GAS LINES
"		EXISTING WATER LINES
BLACK	CURB LINE / CURB LINE	ELEV OF SEWER INVERT PROPOSED C.B. M.H. & INLET SEWER
"		ELEV EXISTING C.B. M.H. & INLET SEWERS
"		PROPOSED C.B. M.H. & INLET SEWERS ON INTERSECTING STREETS

SYMBOL	DESCRIPTION
	SEWER MANHOLE
	P.L.C. HANDHOLE
	P.L.C. MANHOLE
	WATER MANHOLE OR GRATE
	GAS MANHOLE OR GRATE
	WESTERN UNION MANHOLE
	MICHIGAN BELL MANHOLE
	EDISON STEAM MANHOLE
	EDISON ELECTRIC MANHOLE
	FIRE DEPT MANHOLE
	POLICE DEPT MANHOLE
	D.S.R. MANHOLE
	FIRE DEPT STANDARD HYDRANT
	FIRE DEPT HIGH PRESSURE HYDRANT
	FIRE DEPT CALL BOX
	FIRE DEPT HIGH PRESSURE MANHOLE
	POLICE DEPT CALL BOX
	P.L.C. LIGHT POLE
	P.L.C. POLE
	TELEPHONE POLE
	EDISON POLE
	TRAFFIC CONTROL BOX *

SYMBOL	DESCRIPTION
#	STREET SIGN POST
	CATCH BASIN
(W)	WATER METER
(-)	WATER SHUT OFF
(+)	GAS SHUT OFF
	GAS DRIP
	DRAIN OR VENT
	GUY POLE
	MAIL BOX
	AREAWAY OR COAL CHUTE
	FLAG POLE
	SPRINKLER BOX
	DEAD MANHOLE
	TREE
	PLC & FD MANHOLE FILLED WITH SAND
	TRACK DRAIN
	TRAFFIC SIGN POST.
(Z)	TRAFFIC SIGNAL LIGHT.
	TRAFFIC SIGNAL ON LIGHT POST
II	D.S.R. DANGER PLATE.
	R.R. SIGNAL CONTROL BOX

SYMBOL	DESCRIPTION
	DETROIT EDISON ELECTRIC CONDUIT.
	DETROIT EDISON STEAM CONDUIT
	WESTERN UNION DUCTS
	MICHIGAN BELL TELEPHONE DUCTS
	P.L.C. CONDUITS
	DETROIT FIRE OR POLICE DEPT CONDUITS (PLC COMMUNICATIONS)

REVISIONS		
E		
D		
C	Cancel Edison Steam	
B	Add Steam Line Mark	A.S.
A	Signatures Varied	
DESCRIPTION		

DESIGNED BY
DRAWN BY T. KANDY
TRACED BY T.K.
CHECKED BY M. Kawasaki

CITY OF DETROIT
DEPARTMENT OF PUBLIC WORKS
CITY ENGINEER'S OFFICE
BUREAU OF DESIGN
PAVING
DETAIL NO. 25

STANDARD SYMBOLS FOR UTILITIES

BOL. NO. | SCALE NO SCALE
PAGE NO. | DATE | DWG. NO. C-902-A

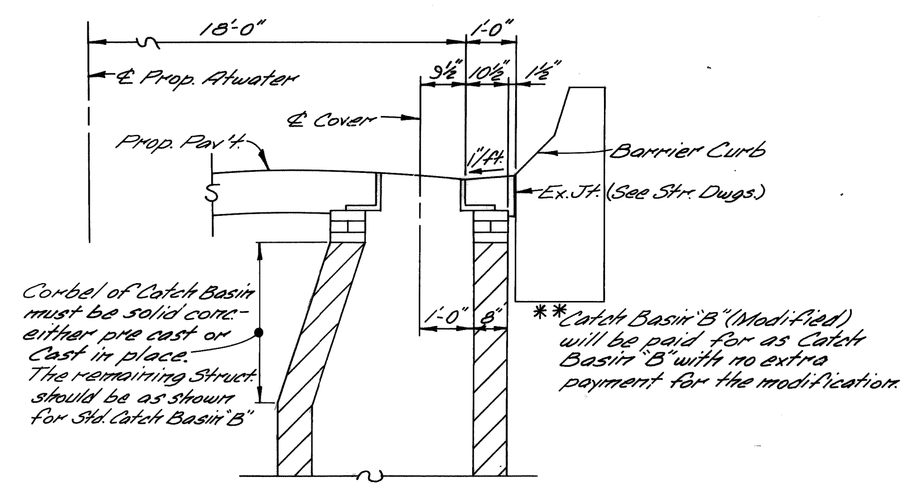

CATCH BASIN "B" (MODIFIED) **
NO SCALE

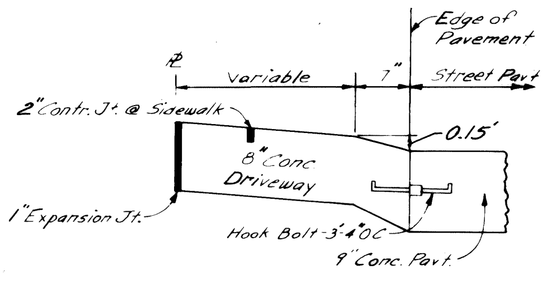

SECTION A-A
SCALE 1"=1'

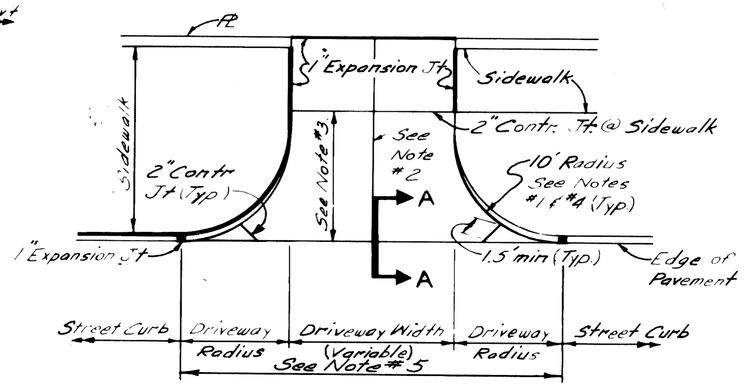

COMMERCIAL DRIVEWAY DETAIL
SCALE 1"=10'

NOTES - COMMERCIAL DRIVEWAY

1. Transition edge of driveway from curb at the street to no curb at the end of the driveway radius.
2. Where driveway exceeds 15' in width, a contraction joint shall be placed longitudinally along ℄.
3. When distance exceeds 15', a transverse contraction joint will be required.
4. Radius 10' unless otherwise directed by the Engineer, or as shown on plans.
5. All work and materials required to construct the driveway between the end of returns will be paid for as "Driveway" of the specified thickness.

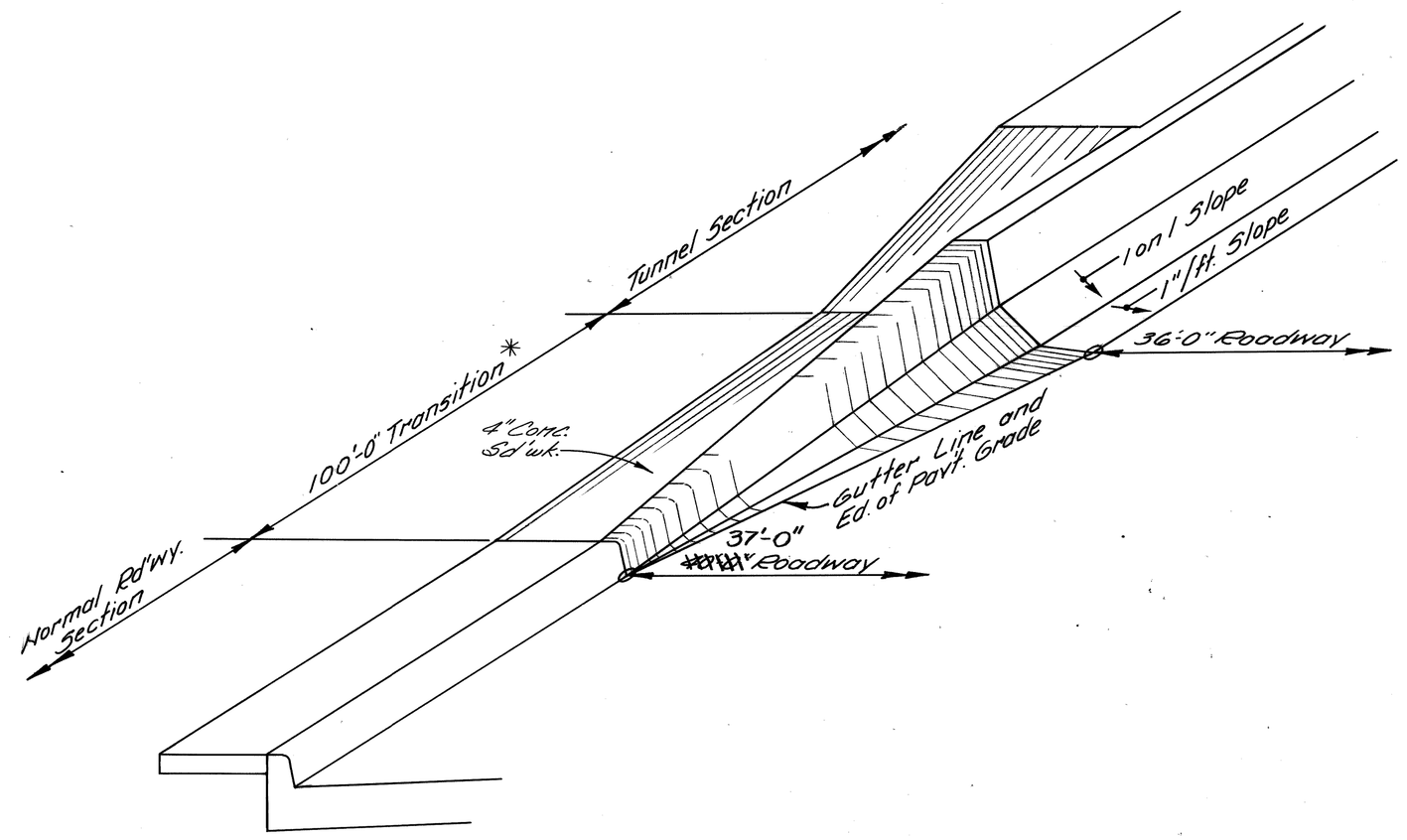

TRANSITION DETAIL

* All materials and labor necessary to construct the curb transition as shown will be paid for as "Conc. Pav't - Double Paint" - 9" with Integral Curb."

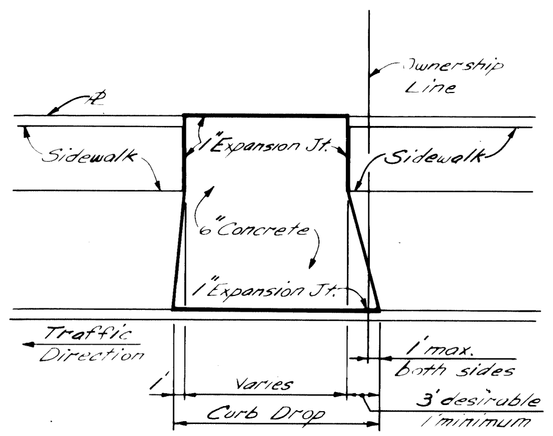

RESIDENTIAL DRIVEWAY DETAIL
SCALE 1"=10'

REVISIONS			
F3	Changed Normal Roadway W.B. Section Dimension		

REFERENCE DRAWINGS

DESIGNED BY
DRAWN BY J.R.D.
TRACED BY
CHECKED BY

APPROVED: Allen E. Parker
ENGINEER OF EXPRESSWAYS

CITY OF DETROIT
CITY ENGINEERING DEPARTMENT

CIVIC CENTER PLAZA
ATWATER ST. RELOCATION

SPECIAL STANDARDS & SPECIAL DETAILS

SHEET 19 OF 81 SHEETS
CONTRACT No 07105 A
ASSIGNMENT No. 2102 (B) X
DATE 8-11-75

R-9

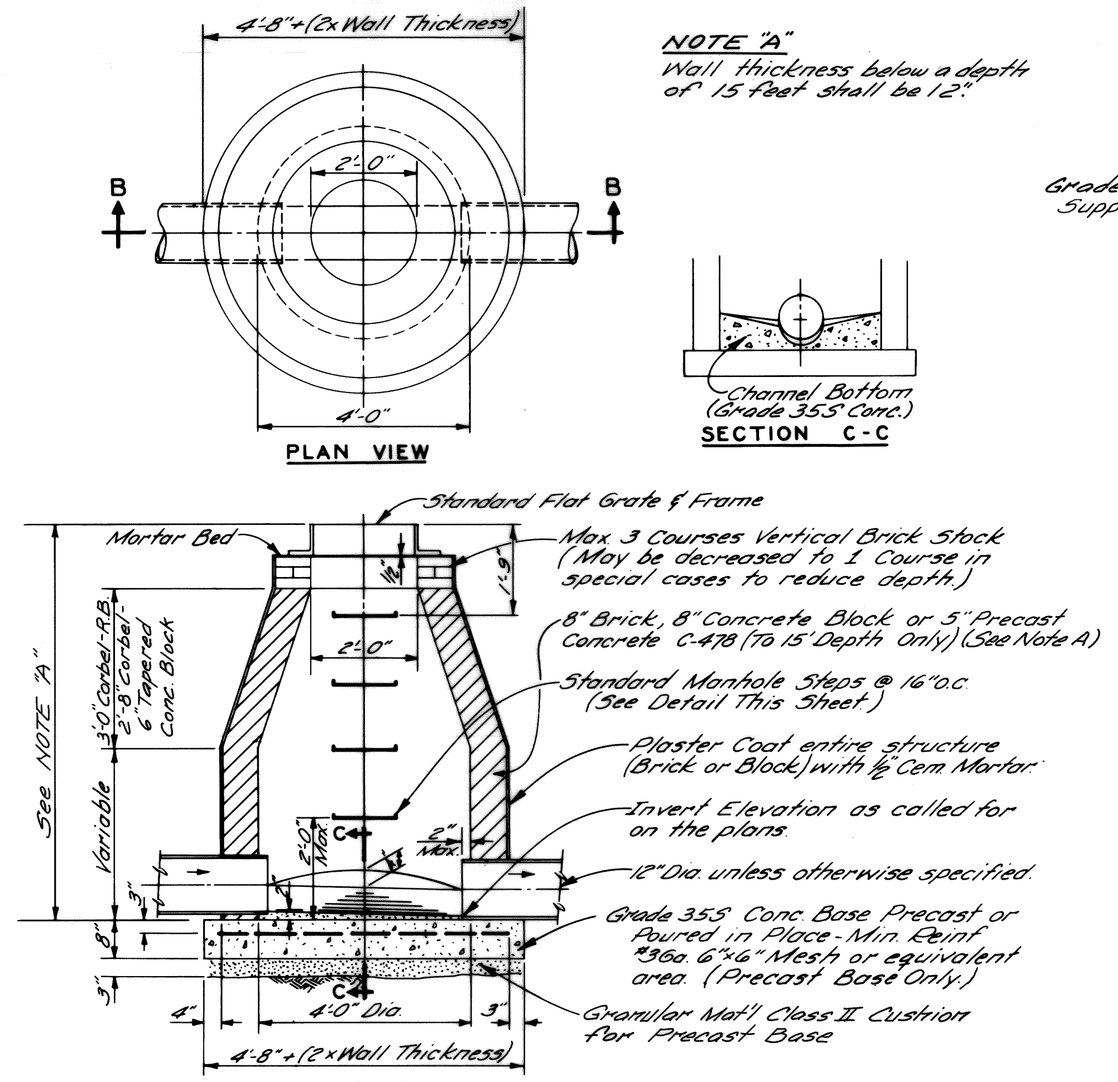

CATCH BASIN "B"

NO SCALE

NOTE "A"
Wall thickness below a depth of 15 feet shall be 12".

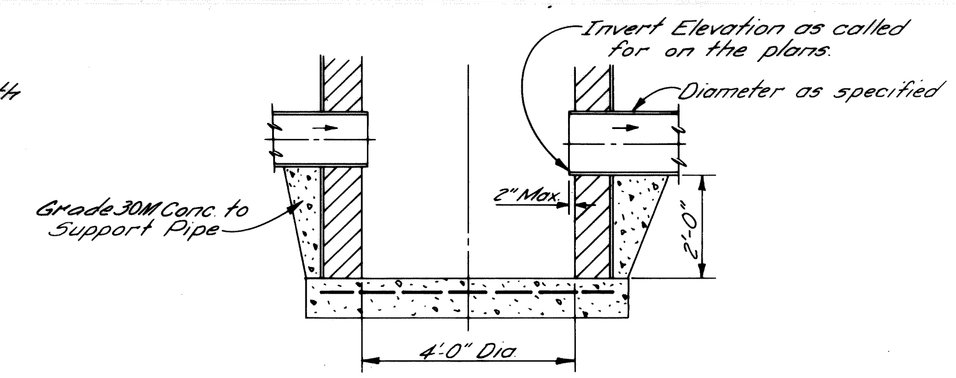

DETAIL OF SUMP FOR CATCH BASIN "B"

NO SCALE

NOTE:
Sewer trap to be of the same mat'l & strength as the outlet sewer pipe.

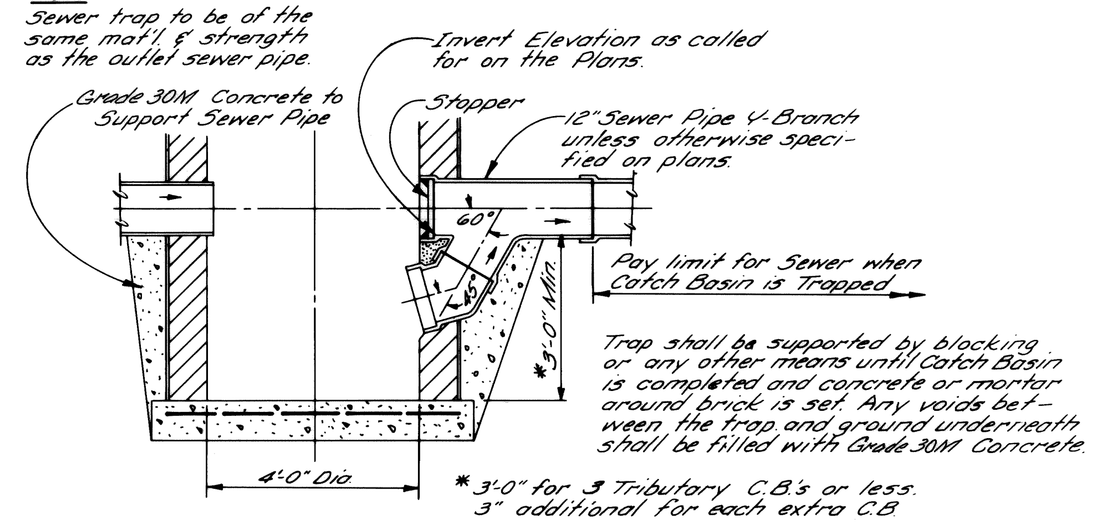

DETAIL OF TRAP FOR CATCH BASIN "B"

NO SCALE

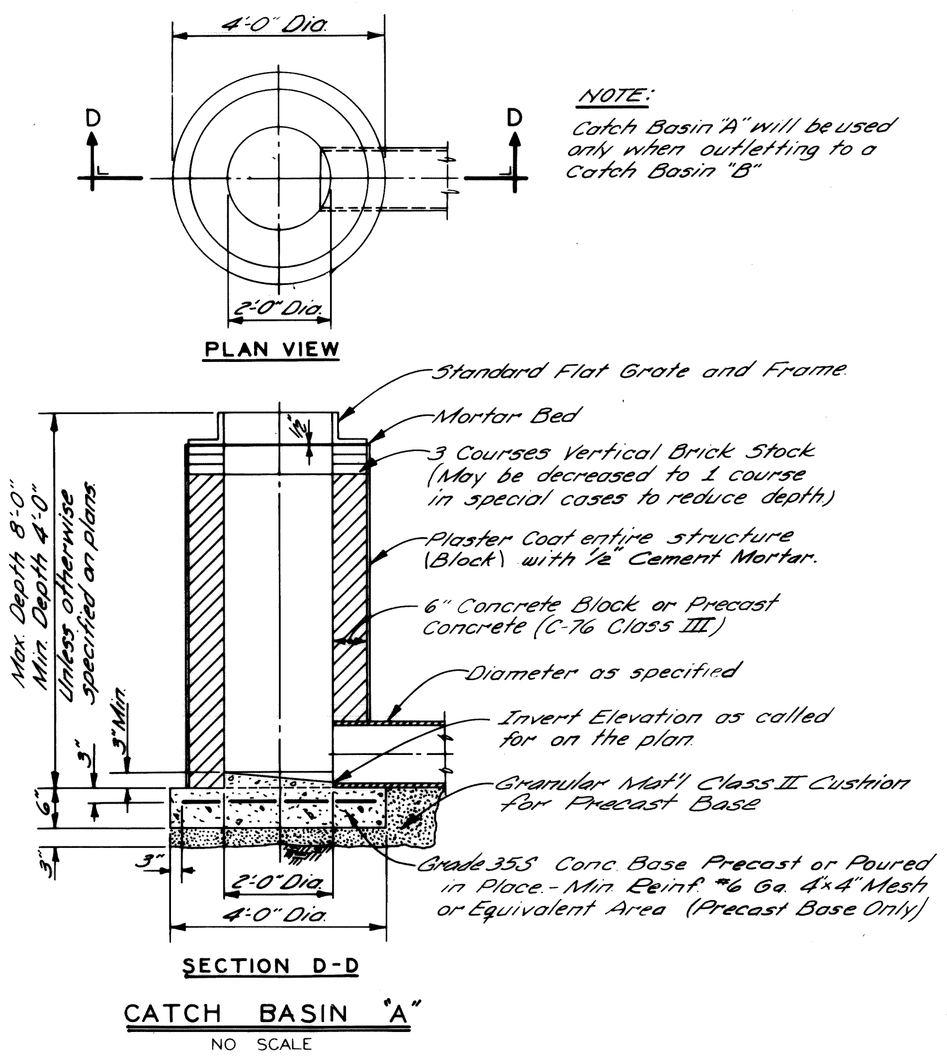

CATCH BASIN "A"

NO SCALE

NOTE:
Catch Basin "A" will be used only when outletting to a Catch Basin "B"

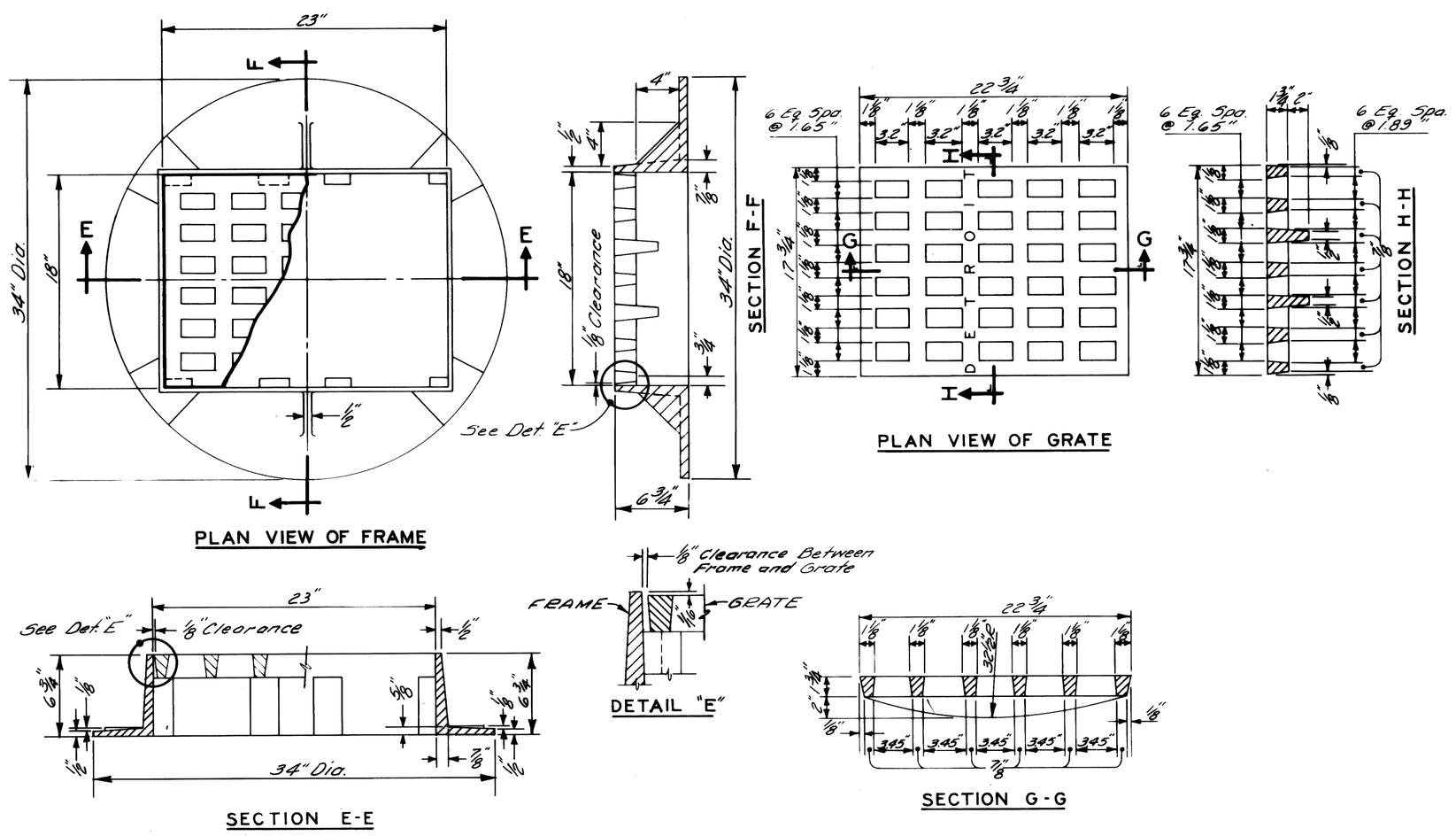

STANDARD FLAT GRATE AND FRAME

NO SCALE

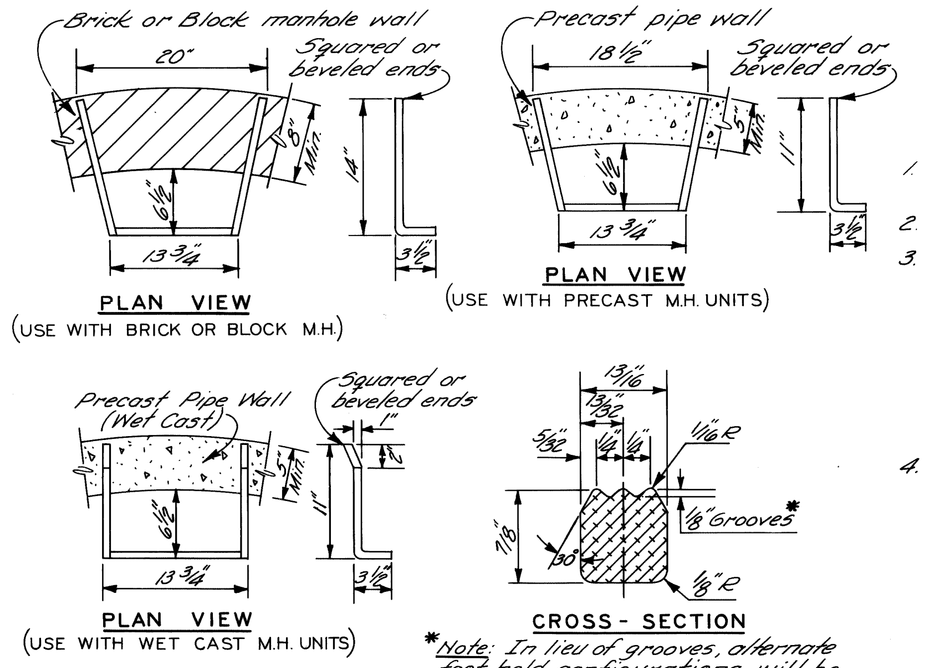

*Note: In lieu of grooves, alternate foot hold configurations will be considered for approval.

ALUMINUM MANHOLE STEP STANDARD DETAILS

NO SCALE

NOTES:

1. Manhole steps shall conform to the requirements for "Aluminum Alloy Extruded Bars, Rods, Shapes & Tubes", A.S.T.M. B221 (Current), Alloy 6061, Temper T-6 or approved equal.
2. Either the flared leg or parallel leg step may be used for poured in place concrete construction or in wet cast manhole units.
3. The parallel leg step shall be used in existing structures by placing in drilled holes and grouting with non-shrink grout.

GENERAL NOTES

1. The materials & workmanship shall be in accordance with the current Standard Specifications.
2. Center of Catch Basin shall be 20 inches from back of curb.
3. All sizes & flow lines of pipe, and elevations for top & bottom of structures shall be determined from the plans or construction requirements.
   The bell shall be removed from the first length of outlet pipe projecting through the wall of the structures.
   When any structure is constructed of precast concrete or concrete block, the top of the masonry shall be left sufficiently low to permit proper adjustment of cover to grade by the use of mortar or bricks as directed by the Engineer.
4. A Trap, as detailed on this sheet, shall be placed where called for in the outlet sewer line of Catch Basins "B".
   This trap shall be set into the masonry wall as shown on the detail. The space between the faces of the wall & the trap shall be completely filled with cement, mortar or concrete, so as to hold Trap securely in place.
   Traps will be paid for separately at the Contract Unit Price each, which price shall include the extra catch basin construction required and for furnishing and installing the trap.
5. A plaster coat of mortar ½ inch in thickness shall be applied to the outer surface of the structure as shown. A ½ inch cement plaster coat shall be placed on the inside of all sumps.
6. Contractor shall verify elevations of existing utilities to enable construction to indicated elevations shown on drawings. If necessary, invert elevations shown on the drawings may be altered in the field to clear existing utilities. Such alterations, upward or downward, shall be at no change in contract price.
7. When precast concrete pipe sections are used for catch basins, either a section of the inlet and outlet pipes or an opening or eye for the inlet & outlet pipes shall be cast into the wall of the catch basin pipe when it is being manufactured. Eyes in precast pipe sections shall be furnished to accommodate a flexible joint connection such as Press-Wedge by Press Seal Gasket Corp or Kas-Seal by Scales Mfg. Corp.

REVISIONS	DESCRIPTION	DRN.	CKD.	APVD.	DATE
	REVISIONS LOCATED BY COORDINATES ON SHEET				

DESIGNED BY	
DRAWN BY	M. POLITO
TRACED BY	
CHECKED BY	D. MILZ

APPROVED: John Erickson
ENGINEER OF STREETS
ENGINEER OF EXPRESSWAYS
HEAD CIVIL ENGINEER

CITY OF DETROIT

CITY ENGINEERING DEPARTMENT

ATWATER ST. RELOCATION
DETAILS OF STANDARD
CATCH BASINS "A" & "B"
AND FLAT GRATE & FRAME

SHEET 20 OF 81 SHEETS
CONTRACT No 07105 A
ASSIG NO. 2102 (B) X
DATE 8-11-75

R-10