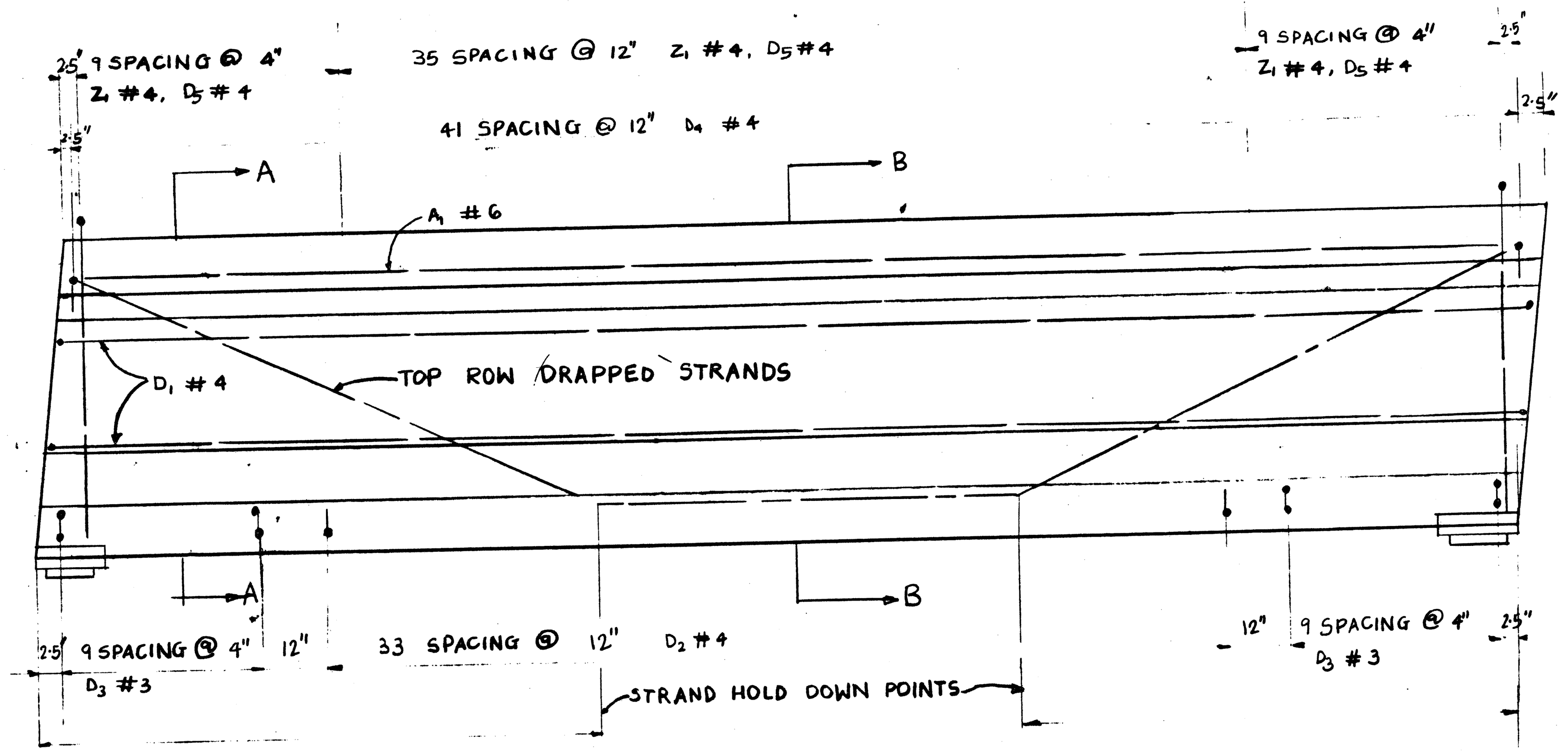

ELEVATION

SCALE: 1/4"=1'-0"

BAR DIMENSIONS		
BAR	DIM.	TYPE II BEAM
A1 #6	A	41'-3"
D1 #4	A	4'-0"
	B	2½"
D2 #4	A	3"
	B	1'-3½"
D3 #3	A	1'-2"
	B	3½"
D4 #4	A	4"
	B	8"
*D5 #4	A	1'-10"
	B	3½"
Z1 #4	A	2'-8½"
	B	3½"

* INDICATES EPOXY COATED BARS

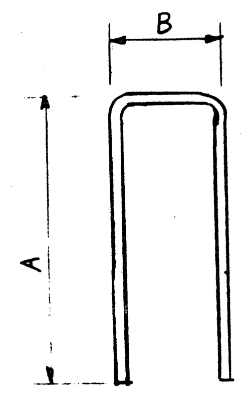

D BAR

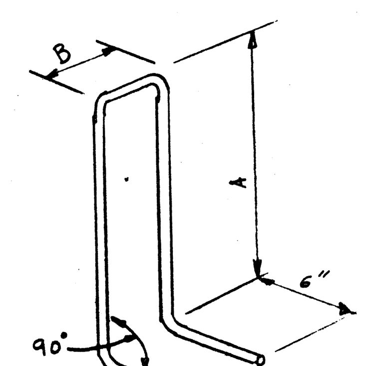

Z BAR

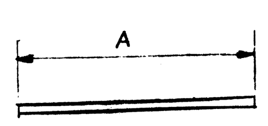

A BAR

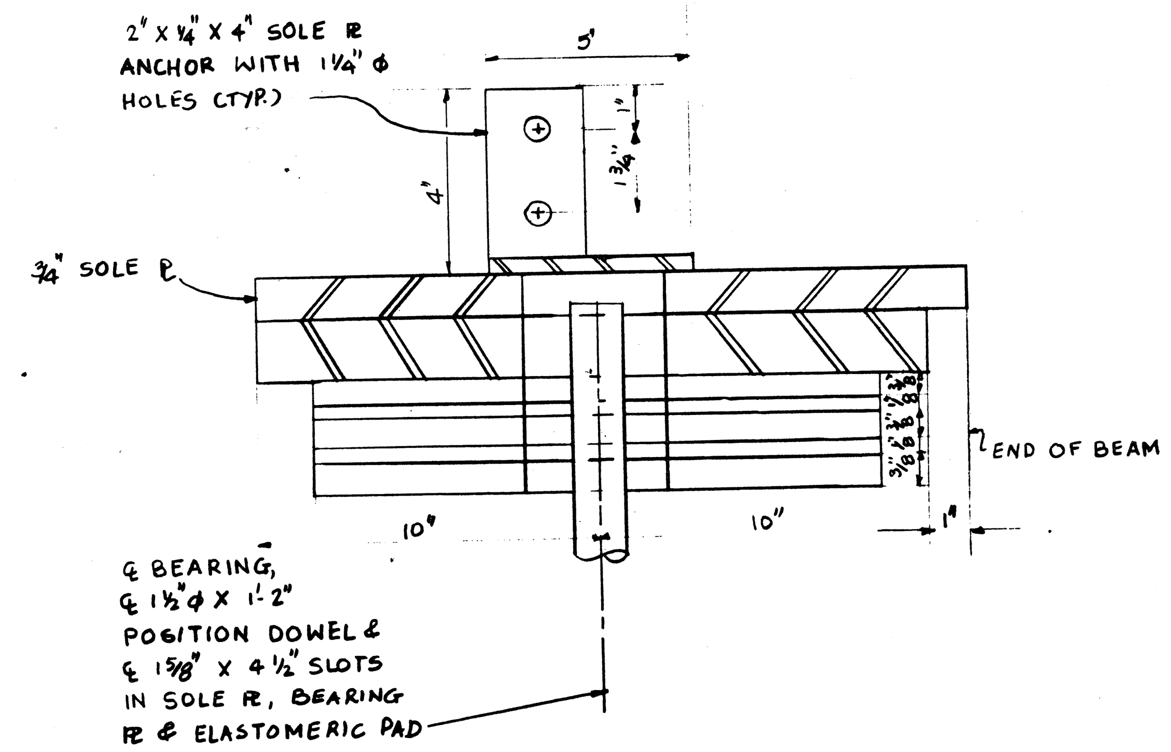

SECTION C-C

SCALE: 1/4" = 0'-1"

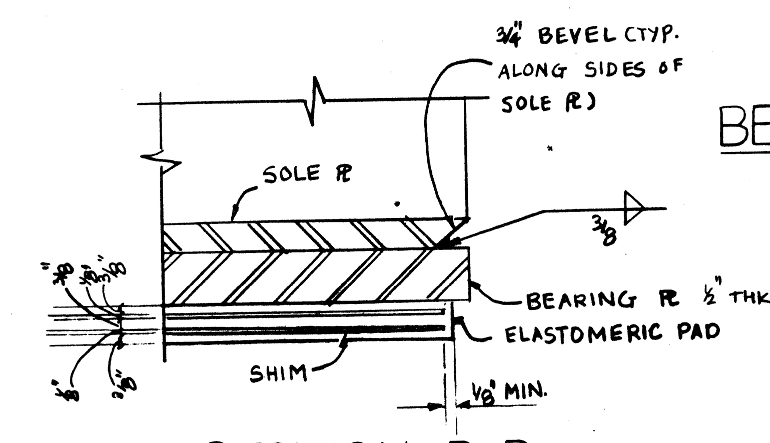

SECTION D-D

BEARING DETAILS

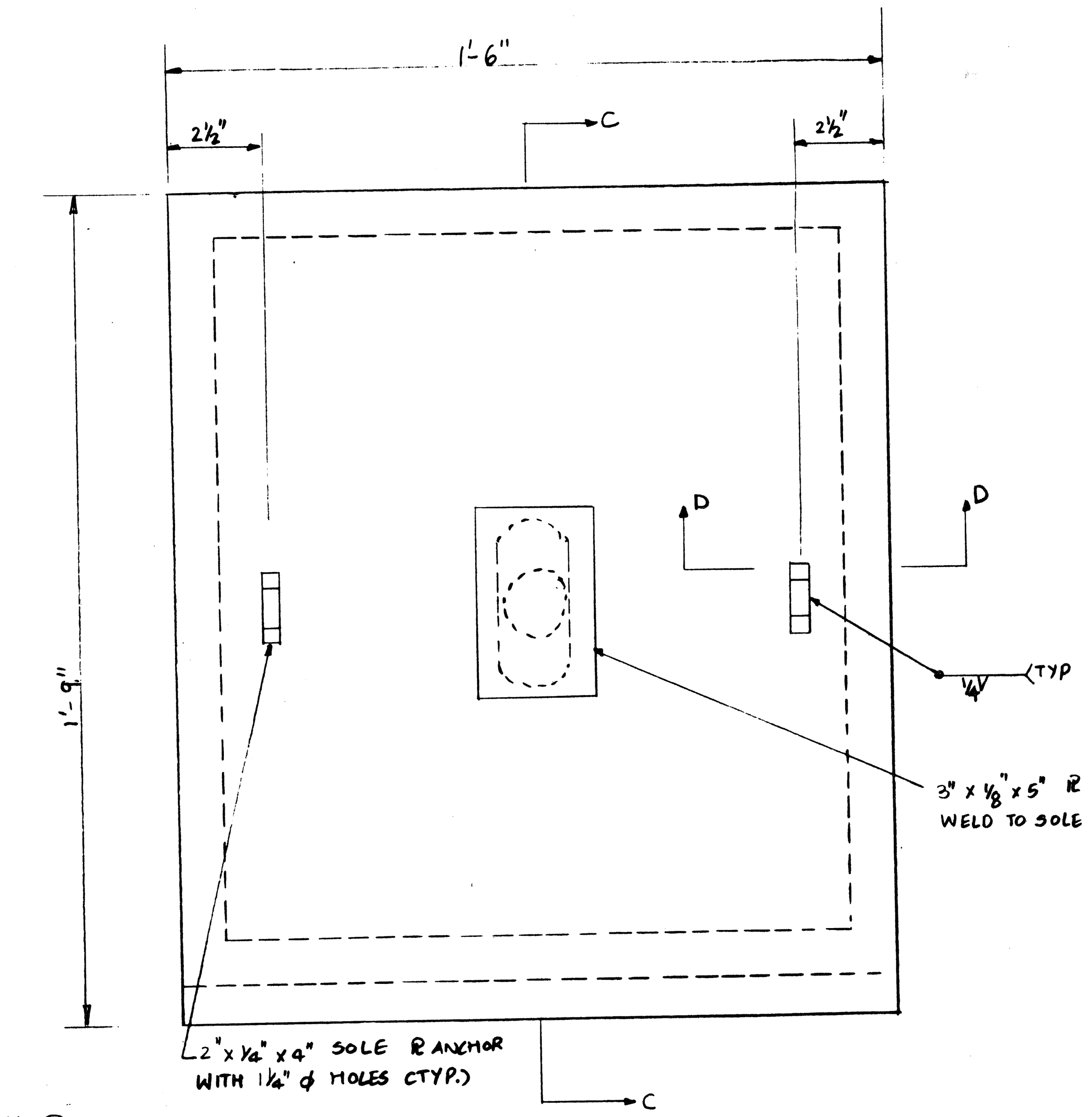

PLAN

SCALE: 3½" = 1'-0"

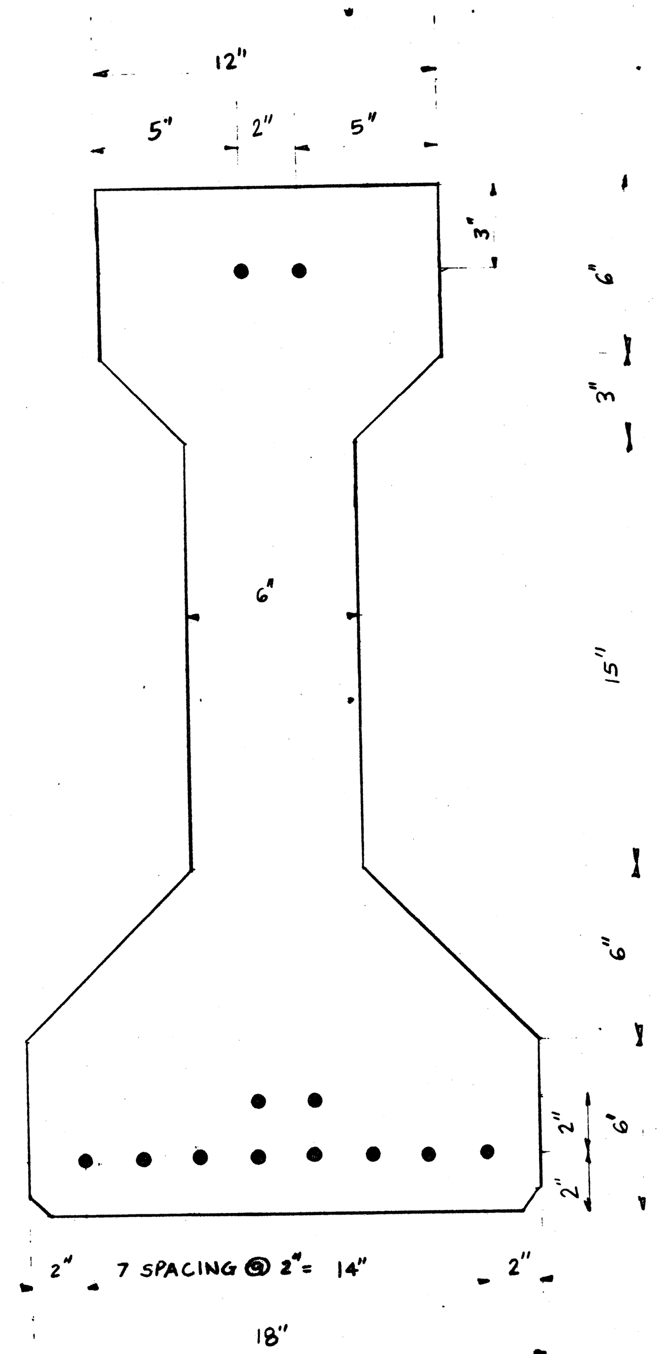

PRESTRESSED TYPE II BEAM

SCALE: 3/4" = 0'-4"

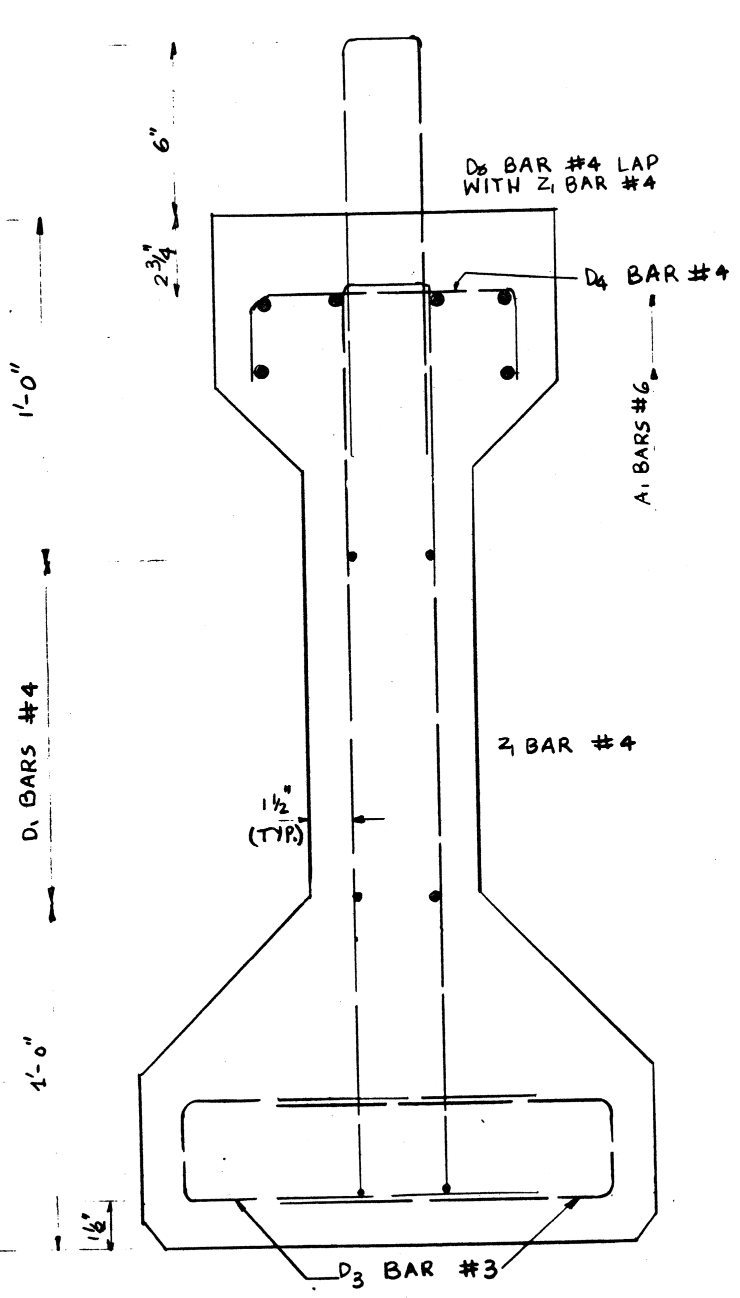

SECTION A-A

SCALE: 3/4" 0'-4"

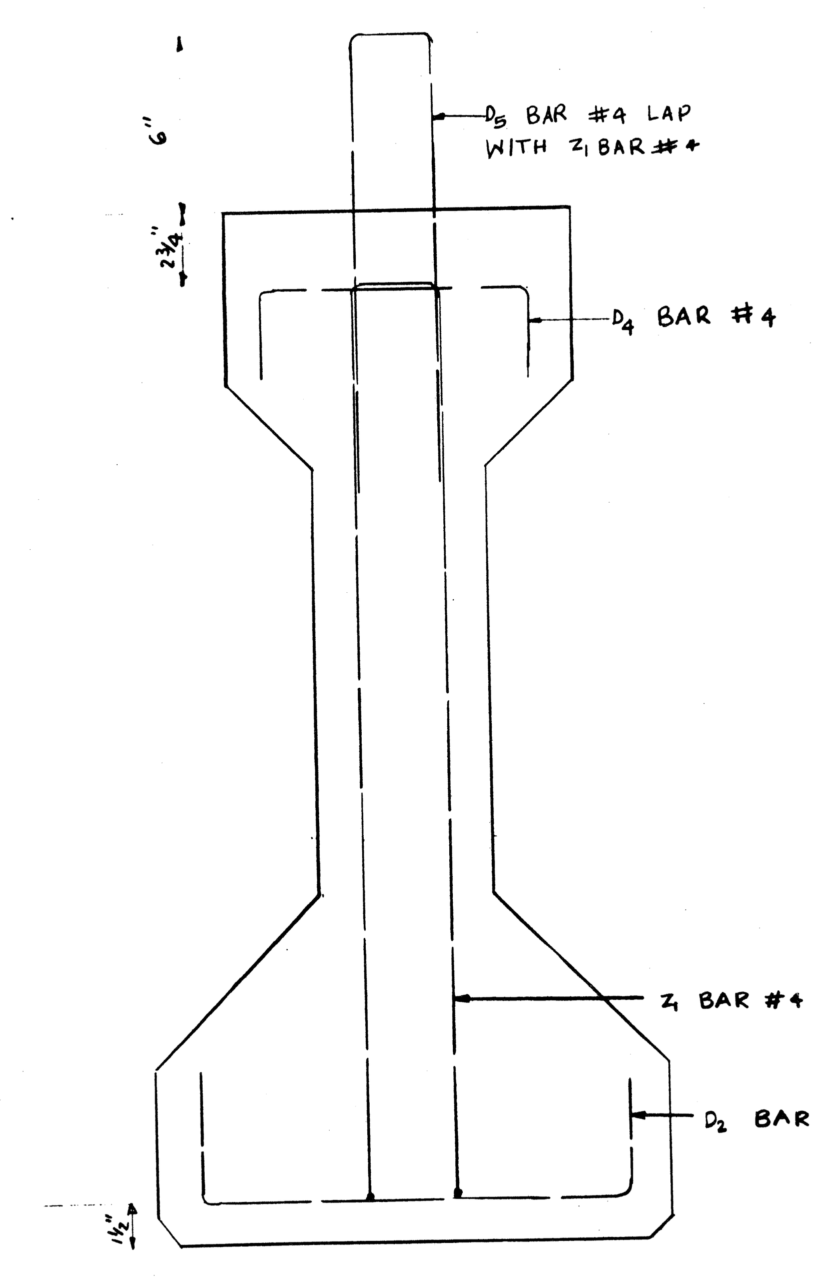

SECTION B-B

SCALE: 3/4" 0' 4"

NOTES:

ALL STEEL IN THE BEARING SHALL MEET THE REQUIRMENTS OF ASTM A36.

ALL STEEL IN THE BEARING IS INCIDENTAL TO "PRESTRESSED CONCRETE I-BEAM".

TACK WELDING OF STEEL REINFORCEMENT IS PROHIBITED.

ELASTOMER FOR ELASTOMERIC BEARING PAD SHALL BE NOMINAL 50 DUROMETER HARDNESS FOR LAMINATED BEARINGS.

PRESTRESSING STRAND SHALL BE 1/2" DIAMETER WITH AN AREA OF 0.153 SQUARE INCHES ANS SHALL BE GRADE 270 IN ACCORDANCE WITH ASTM A416 AND SUPPLEMENT. LOW RELAXATION STRANDS SHALL BE USED.

END BLOCKS ARE REQUIRED.

TOTAL ESTIMATED CHANGE OF LENGTH OF BOTTOM FLANGE AT TRANSFER OF PRESTRESS FORCE IS 3/4".

LIFTING OF BEAM SHALL BE BY EQUAL LOADS TO EACH PAIR OF LIFTING DEVICES.

THE TOP FLANGE TOP SURFACE SHALL BE INTENTIONALLY ROUGHENED.

ALL EXPOSED SURFACES OF CONCRETE TO BE RUBBED AS SOON AS FORMS ARE REMOVED. NO CEMENT GROUT TO BE USED ON EXPOSED SURFACES.

ALL REINFORCING BARS SECURELY WIRED AT ALL INTERSECTIONS.

PRELIMINARY

f						
e						
d						
c						
b						
a						
revisions			dr'n	ck'd	ap'vd	date

designed by P. SHAH

drawn by P. SHAH

checked by

approved:

CITY OF DETROIT

city engineering department

for

SPINOZA DR BRIDGE BW 270

a.o.

contract no.

sheet of

drawing no.

date

TELEDYNE POST N25521

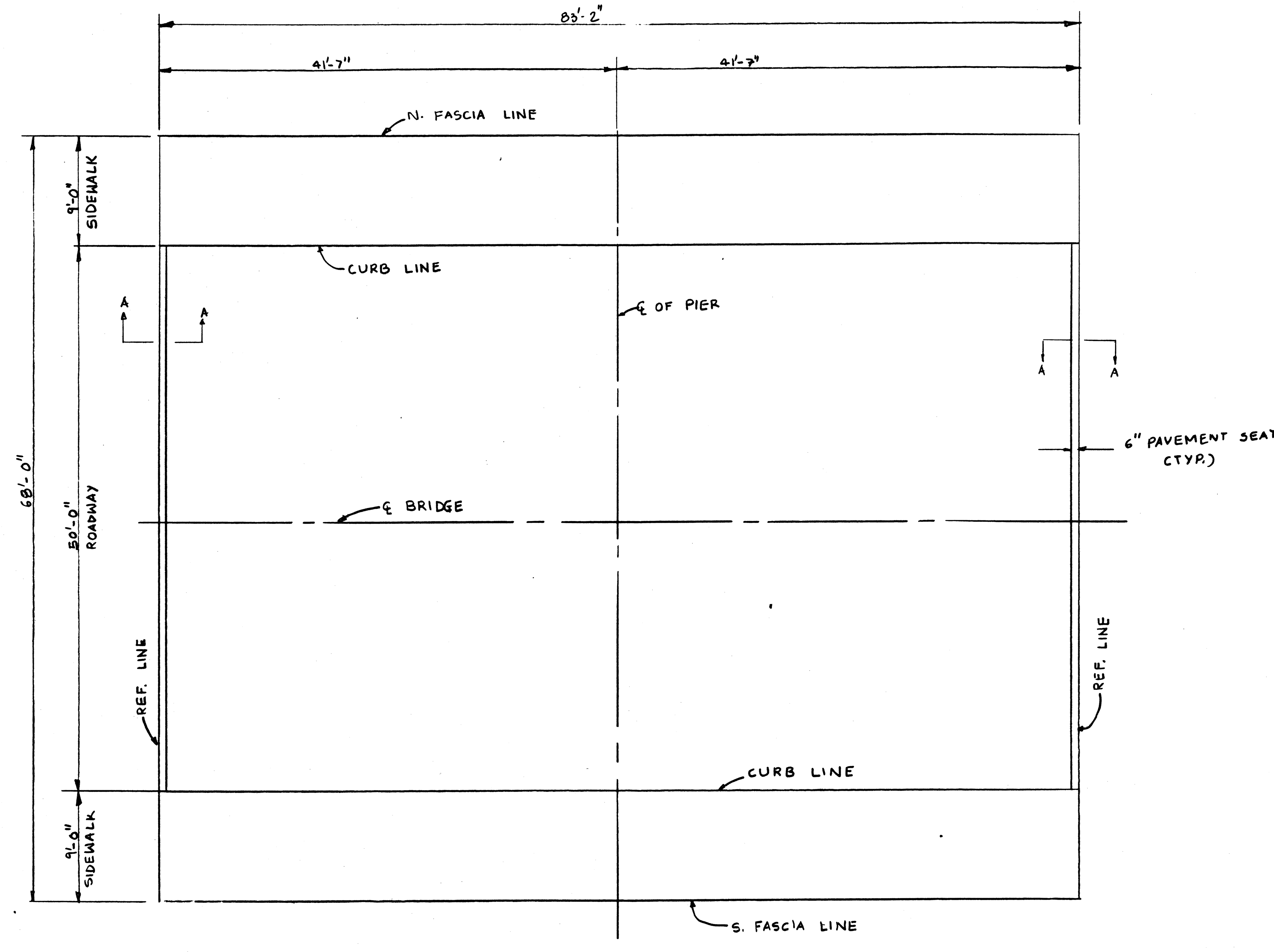

SLAB PLAN
SCALE: 1/8" = 1'-0"

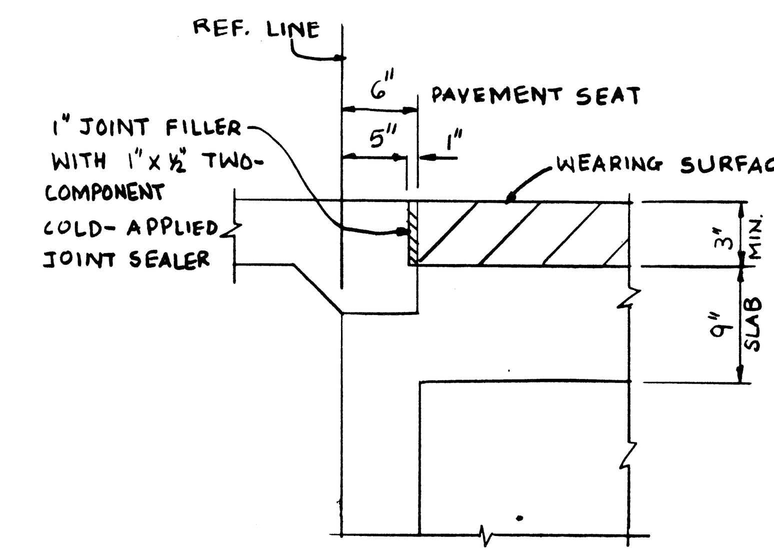

SECTION A-A
SCALE 1" = 1'-0"

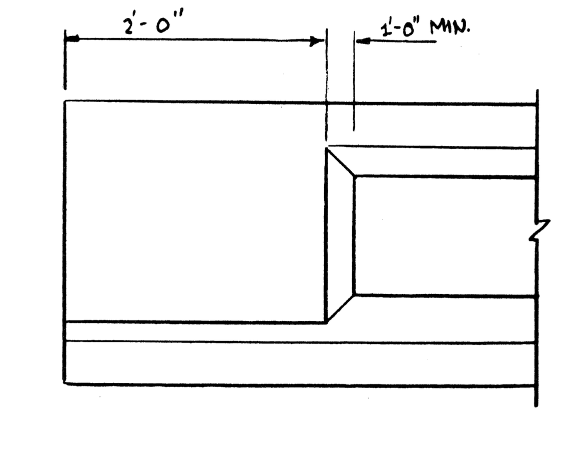

END BLOCK DETAIL

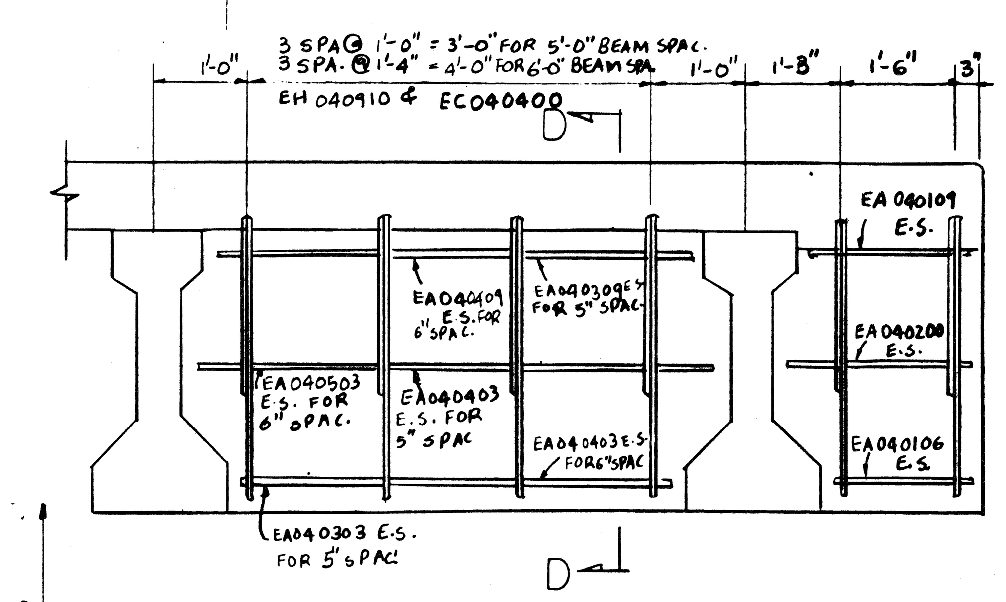

PARTIAL PIER DIAPHRAGM ELEVATION
SCALE: 3/4" = 1'-0"

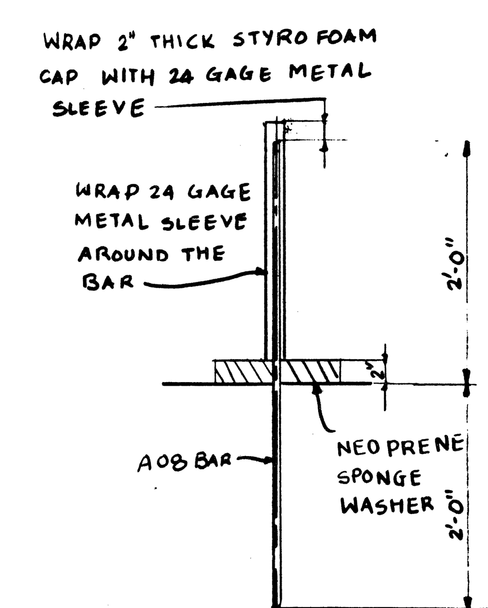

DETAIL G

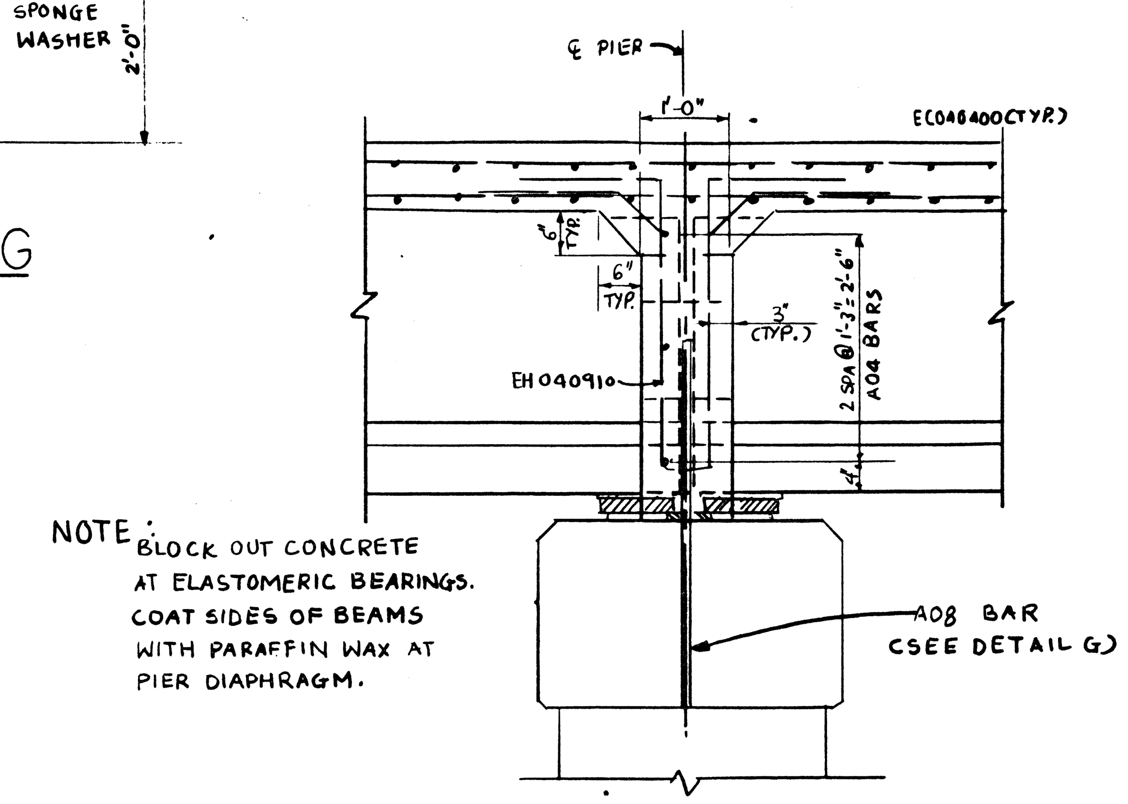

NOTE: BLOCK OUT CONCRETE AT ELASTOMERIC BEARINGS. COAT SIDES OF BEAMS WITH PARAFFIN WAX AT PIER DIAPHRAGM.

SECTION D-D
SCALE: 3/4" = 1'-0"

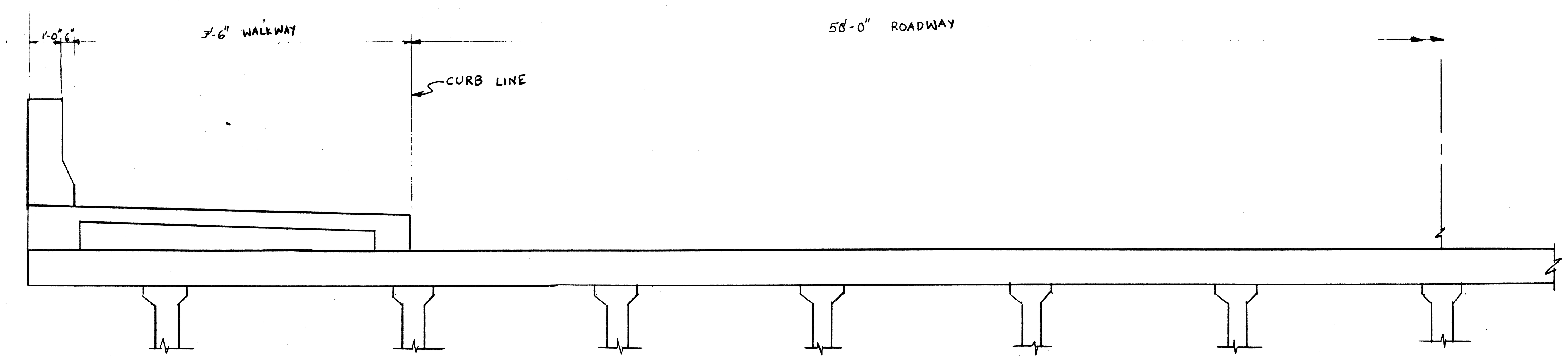

HALF SECTION
SCALE: 1/2" = 1'-0"

PRELIMINARY

TELEDYNE POST N25521

revisions	dr'n	ck'd	ap'vd	date
a				
b				
c				
d				
e				
f				

designed by P. SHAH
drawn by P. SHAH
checked by
approved:

CITY OF DETROIT
city engineering department

for

SPINOZA DR BRIDGE
BW270

a.o.
contract no.
sheet of
drawing no.
date

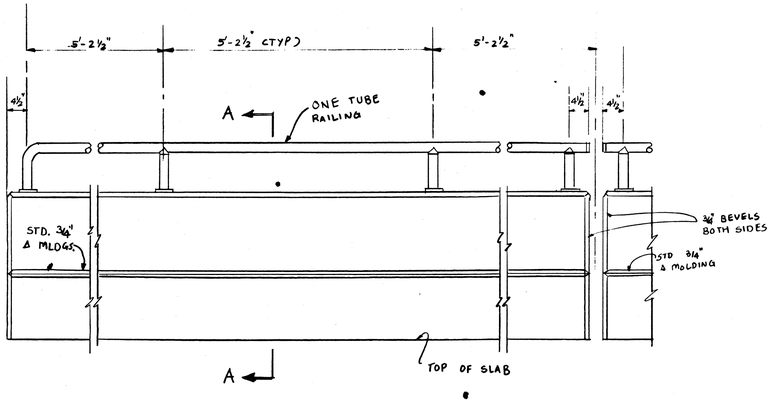

OUTSIDE ELEVATION

SCALE: 3/8" = 1'-0"

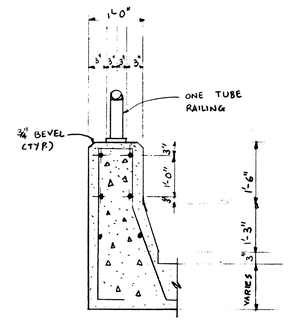

SECTION A-A

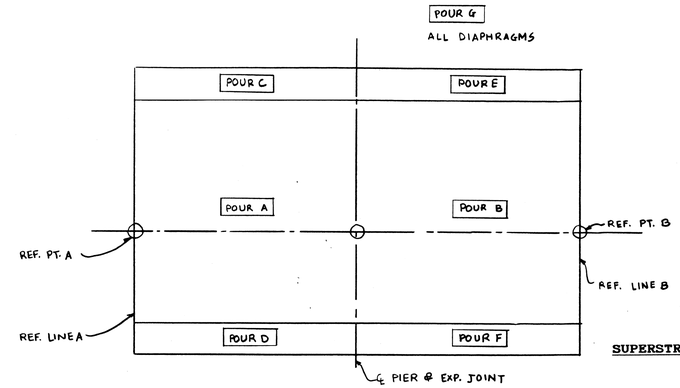

POUR DIAGRAM

SCALE: 3/16" = 5'-0"

SUPERSTRUCTURE CONCRETE QUANTITIES

POUR	AMT (YDS)
A	81.0
B	81.0
C	16.0
D	16.0
E	16.0
F	16.0
G	8.0

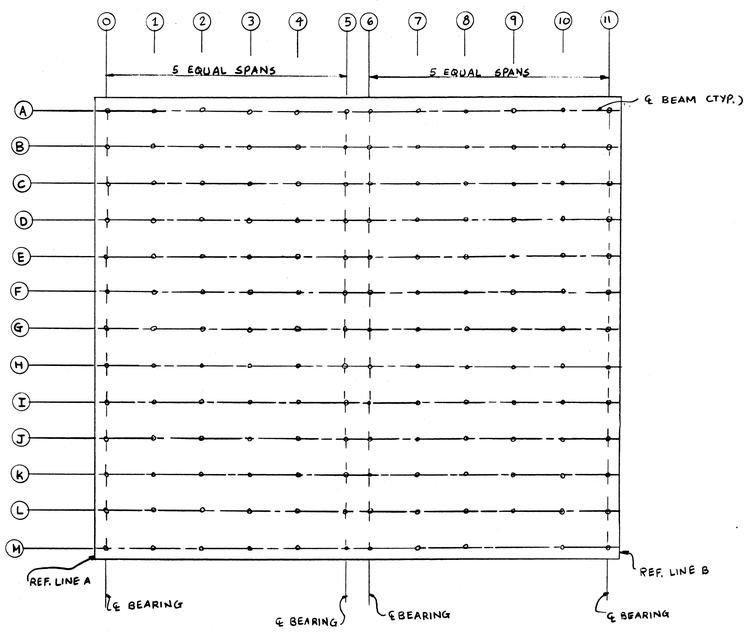

PLAN OF SLAB

TOP OF SLAB ELEVATIONS

	0	1	2	3	4	5	6	7	8	9	10	11
A	123.72	123.76	123.80	123.85	123.89	123.93	123.93	123.89	123.85	123.80	123.76	123.72
B	123.80	123.85	123.89	123.93	123.97	124.01	124.01	123.97	123.93	123.89	123.85	123.80
C	123.89	123.93	123.97	124.01	124.05	124.10	124.10	124.05	124.01	123.97	123.93	123.89
D	123.97	124.01	124.05	124.10	124.14	124.18	124.18	124.14	124.10	124.05	124.01	123.97
E	124.05	124.10	124.14	124.18	124.22	124.26	124.26	124.22	124.18	124.14	124.10	124.05
F	124.14	124.18	124.22	124.26	124.30	124.35	124.35	124.30	124.26	124.22	124.18	124.14
G	124.22	124.26	124.30	124.35	124.39	124.43	124.43	124.39	124.35	124.30	124.26	124.22
H	124.14	124.18	124.22	124.26	124.30	124.35	124.35	124.30	124.26	124.22	124.18	124.14
I	124.05	124.10	124.14	124.18	124.22	124.26	124.26	124.22	124.18	124.14	124.10	124.05
J	123.97	124.01	124.05	124.10	124.14	124.18	124.18	124.14	124.10	124.05	124.01	123.97
K	123.89	123.93	123.97	124.01	124.05	124.10	124.10	124.05	124.01	123.97	123.93	123.89
L	123.80	123.85	123.89	123.93	123.97	124.01	124.01	123.97	123.93	123.89	123.85	123.80
M	123.72	123.76	123.80	123.85	123.89	123.93	123.93	123.89	123.85	123.80	123.76	123.72

CONCRETE BLOCK THICKNESS TABLE

BEAM LINE	SPAN 1 ABUT. A (IN.)	SPAN 1 PIER 1 (IN.)	SPAN 2 PIER 1 (IN.)	SPAN 2 ABUT. B (IN.)
A	0.0	2.5	2.5	0.0
B	1.0	3.5	3.5	1.0
C	2.0	4.5	4.5	2.0
D	3.0	5.5	5.5	3.0
E	4.0	6.5	6.5	4.0
F	5.0	7.5	7.5	5.0
G	6.0	8.5	8.5	6.0
H	5.0	7.5	7.5	5.0
I	4.0	6.5	6.5	4.0
J	3.0	5.5	5.5	3.0
K	2.0	4.5	4.5	2.0
L	1.0	3.5	3.5	1.0
M	0.0	2.5	2.5	0.0

PRELIMINARY

revisions | date | ap'vd | ck'd | dr'n

designed by P. SHAH

drawn by P. SHAH

checked by

approved:

CITY OF DETROIT

city engineering department

for

SPINOZA DR BRIDGE BW270

a.o.

contract no.

sheet of

drawing no.

BAR	DIMENSIONS a	b	c	d	e	f	g	h	NO. REQ'D	TOTAL WT.
EA063500	35'-0"								224	11,776.0
EA062500	25'-0"								224	8,411.0
EA062000	20'-0"								112	3,365.0
EA064200	42'-0"								140	1,908.0
EA064200	42'-0"								134	3,928.0
EF040911	8'-0"	0'-10"	0'-0"	1'-1"	0'-0"	0'-0"			288	8,453.0
EA040109	1'-9"								2	2.4
EA040200	2'-0"								2	2.7
EA040106	1'-6"								2	2.0
EA040409	4'-9"								2	6.4
EA040503	5'-3"								2	7.0
EA040403	4'-3"								2	5.7
EA040309	3'-9"								10	25.1
EA040403	4'-3"								10	28.4
EA040303	3'-3"								10	21.7
EG040311	0'-6"	0'-6"	0'-6"	0'-6"	0'-8½"	0'-6"	0'-8½"	1'-0"	48	125.6
EH040908	1'-6"	3'-11"	0'-6"	3'-1"	1'-6"				48	310.1
EK041205	2'-0"	4'-4"	0'-6"	1'-2"	3'-2"	0'-6"	3'-4½"	1'-½"	166	1,377.0
EA064200	42'-0"								24	1,514.0
									TOTAL	41,269.0

BAR	DIMENSIONS a	b	c	d	e	f	g	h	NO. REQ'D	TOTAL WT.

BAR	DIMENSIONS a	b	c	d	e	f	g	h	NO. REQ'D	TOTAL WT.

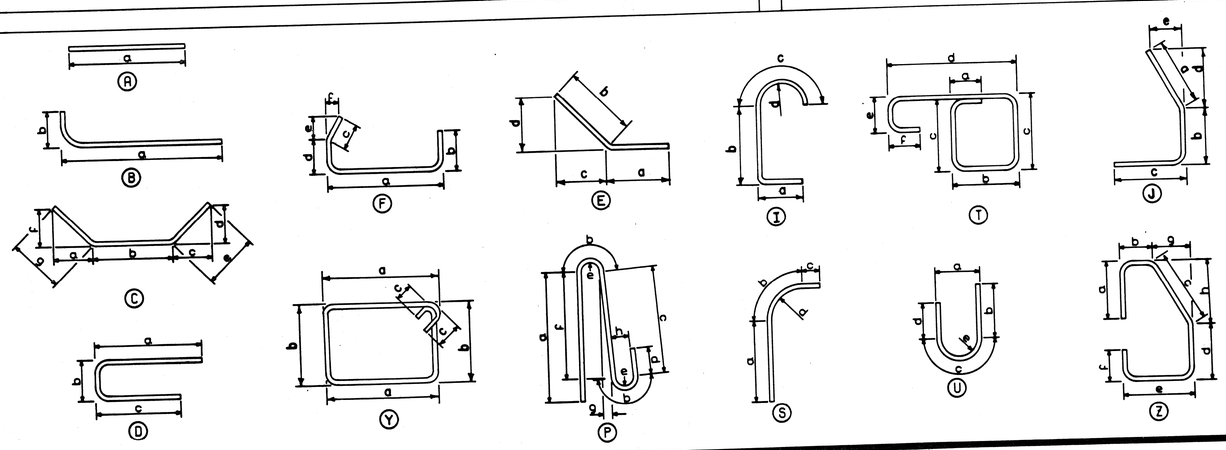

NOTES:

ALL BENDS IN REINFORCING STEEL TO BE MADE ABOUT A PIN OF THE MINIMUM DIAMETER ALLOWED BY THE STANDARD SPECIFICATION.

TOLERANCES IN CUTTING AND BENDING BARS ARE AS ESTABLISHED IN MANUAL OF STANDARD PRACTICE OF THE REINFORCING STEEL INSTITUTE AND DETAILING MANUAL OF THE AMERICAN CONCRETE INSTITUTE.

WHERE FIELD CUTTING OF EPOXY BARS IS REQUIRED, THE CONTRACTOR SHALL REPAIR THE EPOXY COATING AT THE CUT END AS PROVIDED FOR IN STANDARD SPECIFICATION 8.05.03 (INCIDENTAL TO STEEL REINFORCEMENT EPOXY COATED).

REINFORCEMENT SHALL BE BUNDLED AND TAGGED AS TO THE LOCATION AS SHOWN ON THIS SHEET.

WHERE A DIMENSION OF A BAR IS NOT SHOWN ON THE PLANS, OR CANNOT BE DETERMINED FROM THE DETAILED DIMENSIONS, THE DIMENSION SHALL BE THE STANDARD BEND LENGTH.

THE CONTRACTOR SHALL SUBMIT ORIGINAL SHOP DRAWINGS FOR FABRICATION, BENDING AND PLACEMENT OF CONCRETE REINFORCEMENT. THE SHOP DRAWINGS SHALL COMPLY WITH ACI 315-80 "DETAILS AND DETAILING OF CONCRETE REINFORCEMENT" AND ACI 315R-80 "MANUAL OF ENGINEERING AND PLACING DRAWINGS FOR REINFORCED CONCRETE STRUCTURES" SHOWING BAR SCHEDULES, STIRRUP SPACING, DIAGRAMS OF BENT BARS, ARRANGEMENT, SPACING AND BAR MARKS OF CONCRETE REINFORCEMENT.

BAR NUMBERS:

PRELIMINARY

EPOXY COATED
BAR SHAPE
BAR SIZE
BAR LENGTH (FT)
BAR LENGTH (IN)

EA062906

WORK THIS SHEET WITH SHEET NO. THRU

STEEL REINFORCEMENT DETAILS

SPINOZA DR BRIDGE

BW270

REVISIONS

NO.	DESCRIPTION	DATE	BY

SQUAD BOSS	
DRAWN BY	
TRACED BY	
CHECKED BY	
SHEET	OF

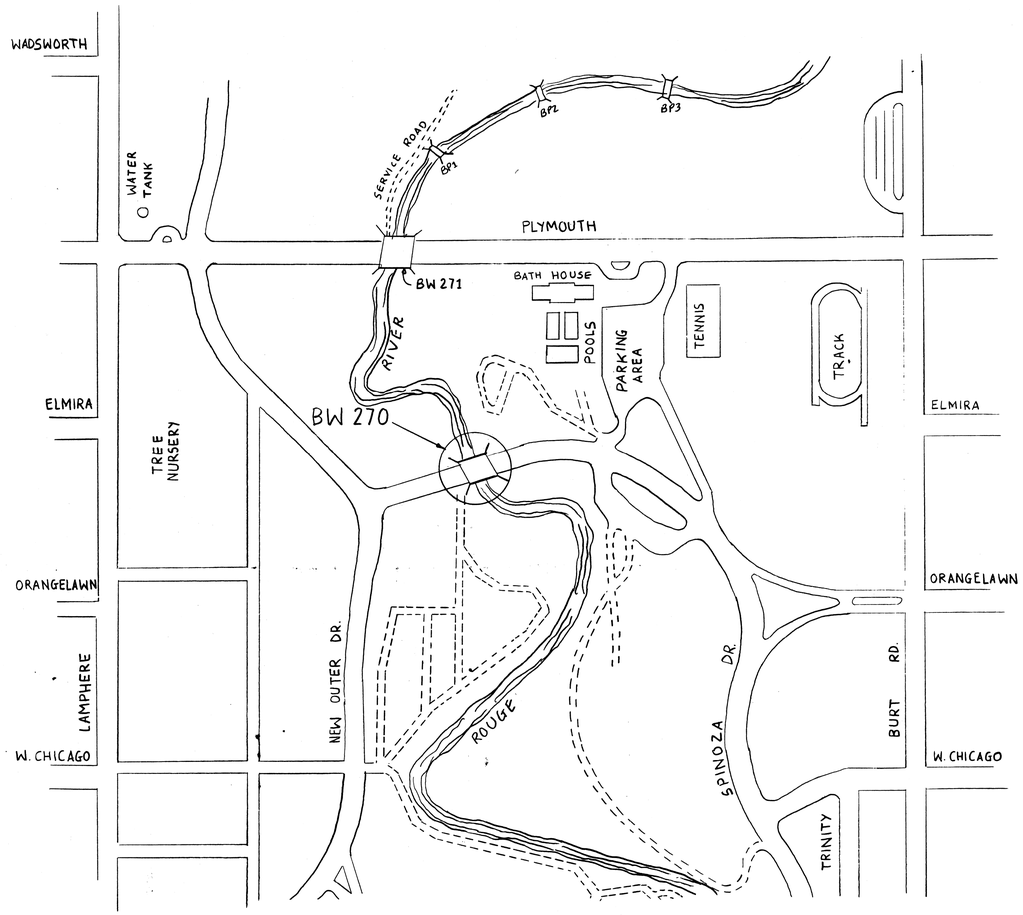

LOCATION PLAN

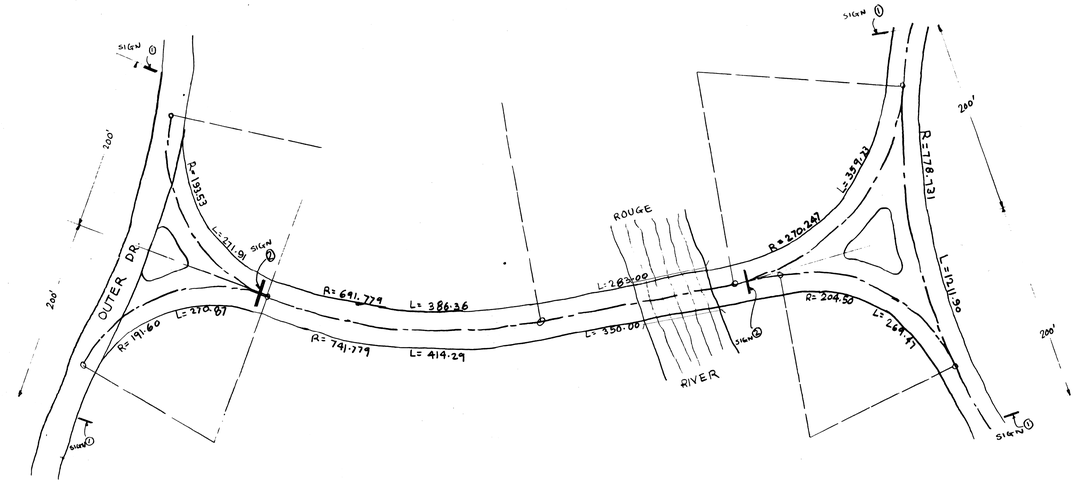

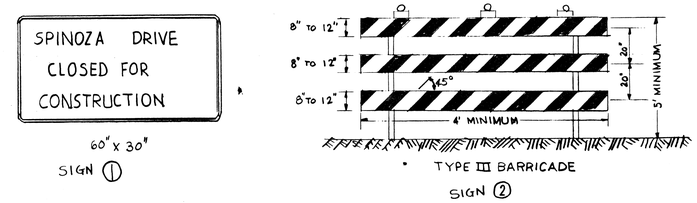

TRAFFIC CONTROL DIAGRAM

GENERAL NOTES:

THE DESIGN OF THIS STRUCTURE IS BASED ON THE 1990 EDITION OF AASHTO STANDARD SPECIFICATION FOR HIGHWAY BRIDGES HS-~~25~~ 20 LOADING. LIVE LOAD PLUS IMPACT DEFLECTION DOES NOT EXCEED 1/1000 OF SPAN LENGTH.

THE WORKING STRESS METHOD OF DESIGN WAS USED FOR THIS STRUCTURE.

ALL EXPOSED CONCRETE CORNERS SHOWN SQUARE ON THE PLANS SHALL BE 1/2" BEVELED EXCEPT AS OTHERWISE NOTED.

THE DESIGN OF THE STRUCTURAL MEMBERS IS BASED ON MATERIAL OF THE FOLLOWING STRESSES:

REINF.CONCRETE: f_c' =4,000 PSI STEEL REINF.: f_y = 60,000 PSI

PRESTR. CONCRETE: f_c' =5,000 PSI STRUCT.STEEL A36: f_y=36,000 PSI

THE CONTRACTOR SHALL LOCATE ALL UTILITIES PRIOR TO STARTING WORK AND SHALL CONDUCT HIS OPERATIONS IN SUCH A MANNER AS TO ENSURE THAT THOSE UTILITIES NOT REQUIRING RELOCATION WILL NOT BE DISTURBED.

FOR PROTECTION OF UNDERGROUND UTILITIES, THE CONTRACTOR SHALL DIAL 800-482-7171 A MINIMUM OF 48 HOURS PRIOR TO EXCAVATING IN THE VICINITY OF UTILITY LINES. ALL "MISS DIG" PARTICIPATING MEMBERS WILL THUS BE ROUTINELY NOTIFIED. THIS DOES NOT RELIEVE CONTRACTOR OF THE RESPONSIBILITY OF NOTIFYING UTILITY OWNERS WHO MAY NOT BE A PART OF THE "MISS DIG" ALERT SYSTEM.

WATER LEVEL IS SUBJECT TO CHANGE. THE CONTRACTOR IS RESPONSIBLE FOR MAKING HIS OWN DETERMINATION OF WATER LEVELS THAT WILL EXIST DURING CONSTRUCTION.

PROTECTIVE TREATMENT FOR BRIDGE DECK IS TO BE APPLIED TO ALL SUPERSTRUCTURE CONCRETE SURFACES BETWEEN INSIDE FACES OF BARRIER. SIDEWALK AND BARRIER POURS SHALL NOT BE CAST UNTIL SLAB CONCRETE HAS ATTAINED AT LEAST 70% OF ITS DESIGN STRENGTH.

PRELIMINARY

revisions	dr'n	ck'd	ap'vd	date
1				
2				
3				
4				
5				
6				

designed by P. SHAH
drawn by P. SHAH
checked by
approved:

CITY OF DETROIT
city engineering department
for

SPINOZA DR BRIDGE
BW 270

a.o.
contract no.
sheet
of
drawing no.
date

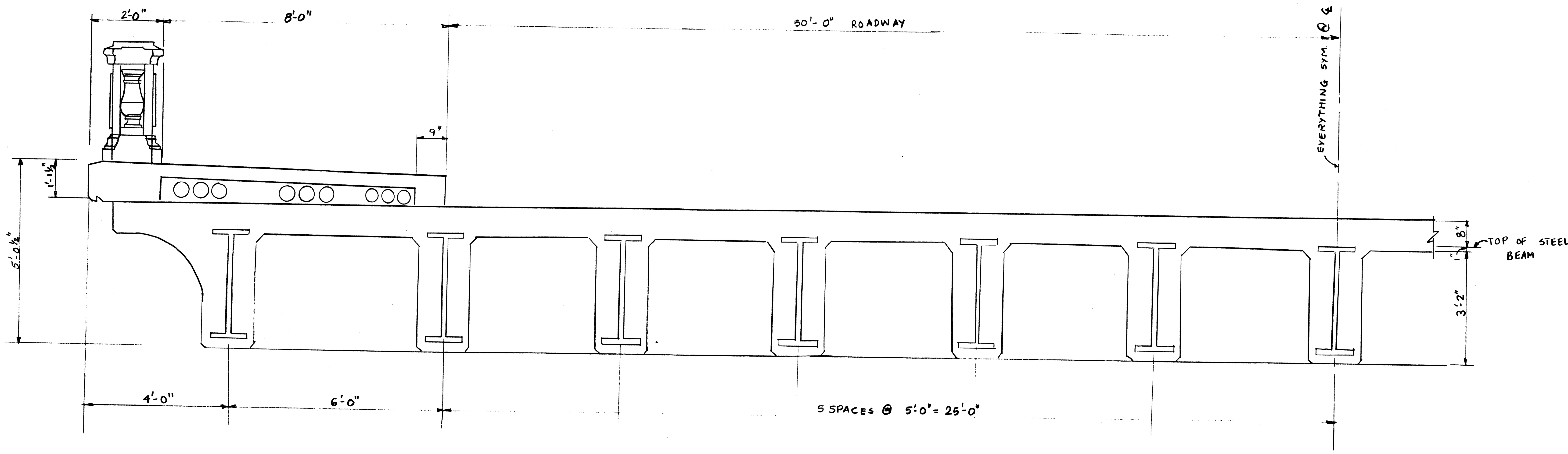

HALF SECTION OF EXISTING DECK

SCALE: 1/2" = 1'-0"

DEMOLITION QUANTITIES

PAY ITEM	QUANTITY	UNIT
REMOVAL OF DECK	647.0	SYD
REMOVAL OF PARAPET	167.0	LFT
REMOVAL OF SIDEWALK	36.2	CYD
REMOVAL OF BEAM	1,079.0	LFT

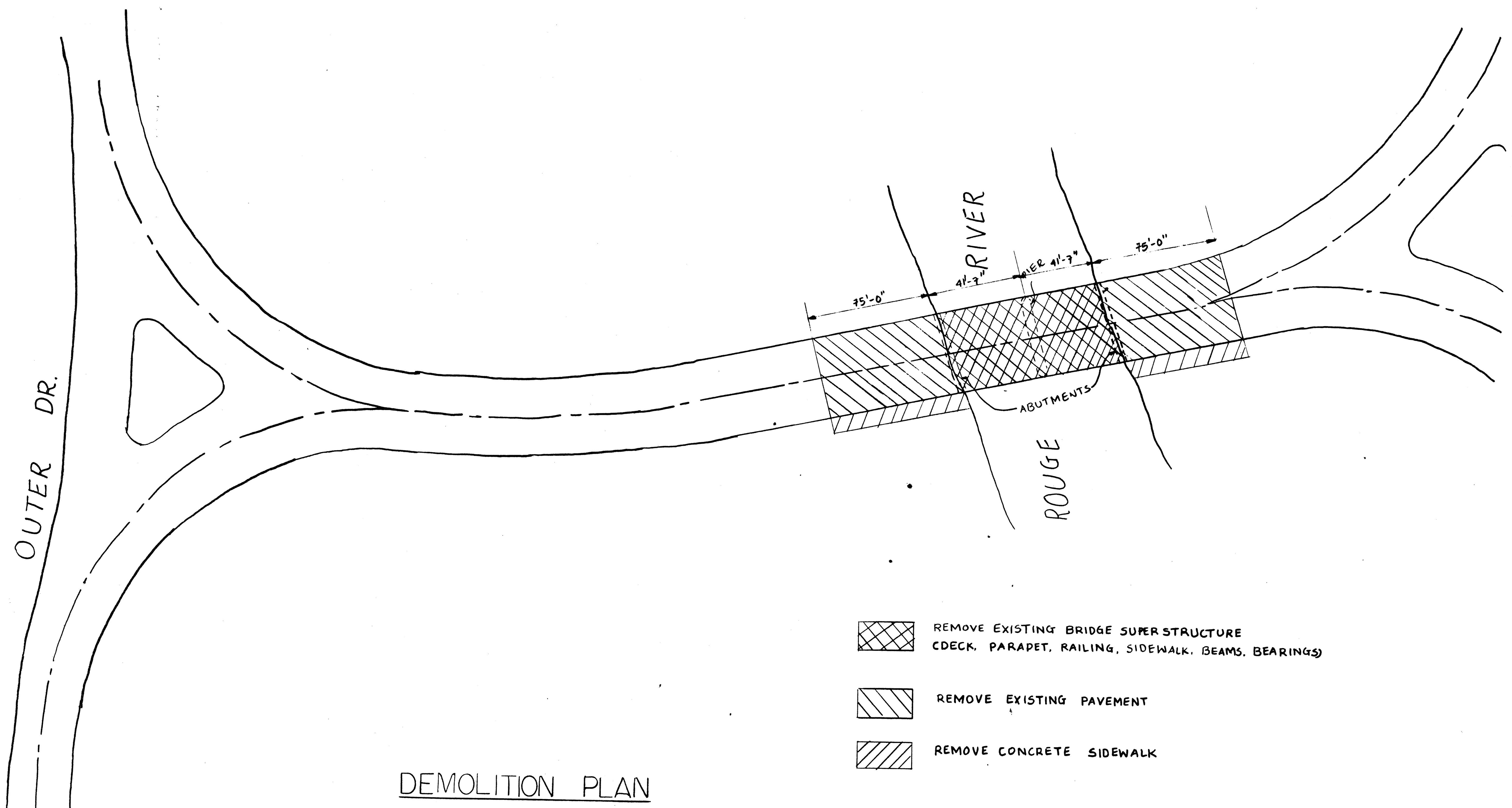

REMOVE EXISTING BRIDGE SUPER STRUCTURE (DECK, PARAPET, RAILING, SIDEWALK, BEAMS, BEARINGS)

REMOVE EXISTING PAVEMENT

REMOVE CONCRETE SIDEWALK

DEMOLITION PLAN

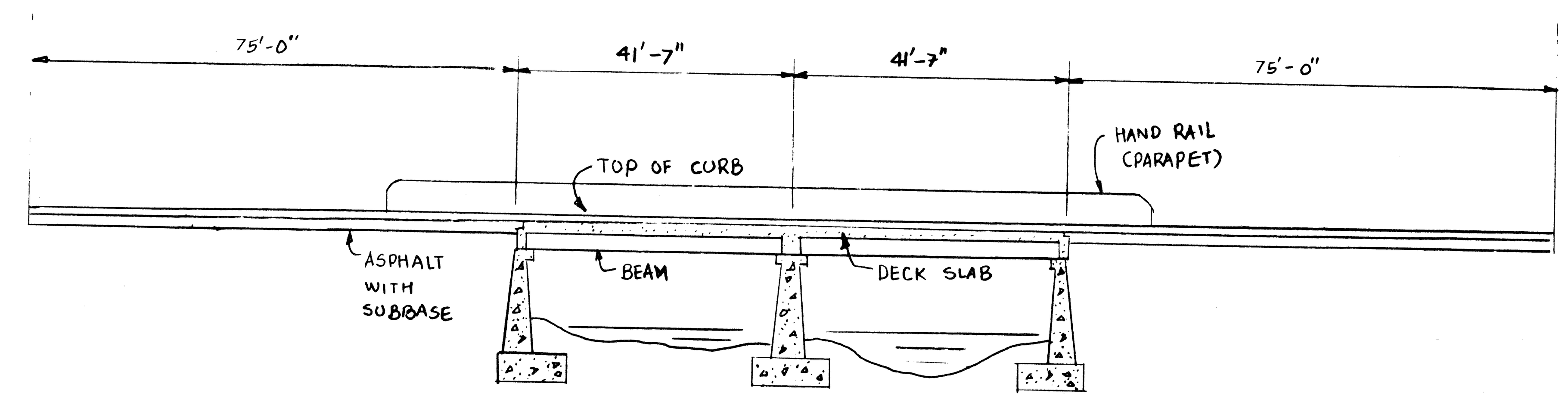

CROSS-SECTION VIEW

SCALE: 1" = 20'

PRELIMINARY

revisions

	dr'n	ck'd	ap'vd	date
a				
b				
c				
d				
e				
f				

designed by P. SHAH

drawn by P. SHAH

checked by

approved:

CITY OF DETROIT

city engineering department

for

SPINOZA DR BRIDGE BW270

a.o.

contract no.

sheet of

drawing no.

date

TELEDYNE POST N25521

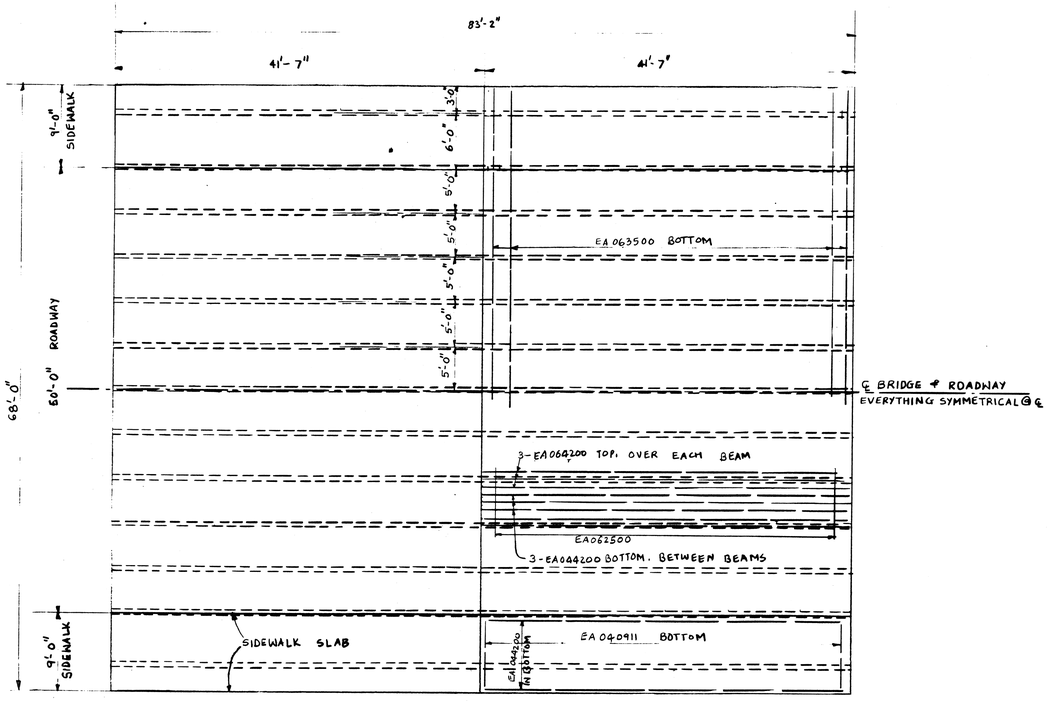

DECK PLAN

SCALE : 1/8" = 1'-0"

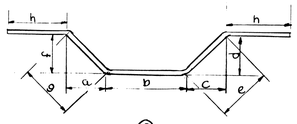

Ⓖ

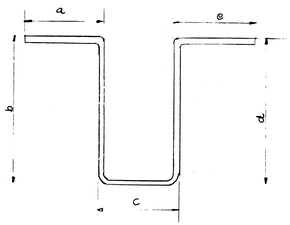

Ⓗ

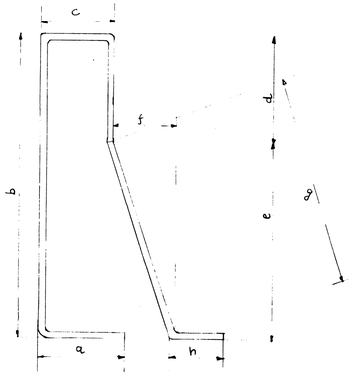

Ⓚ

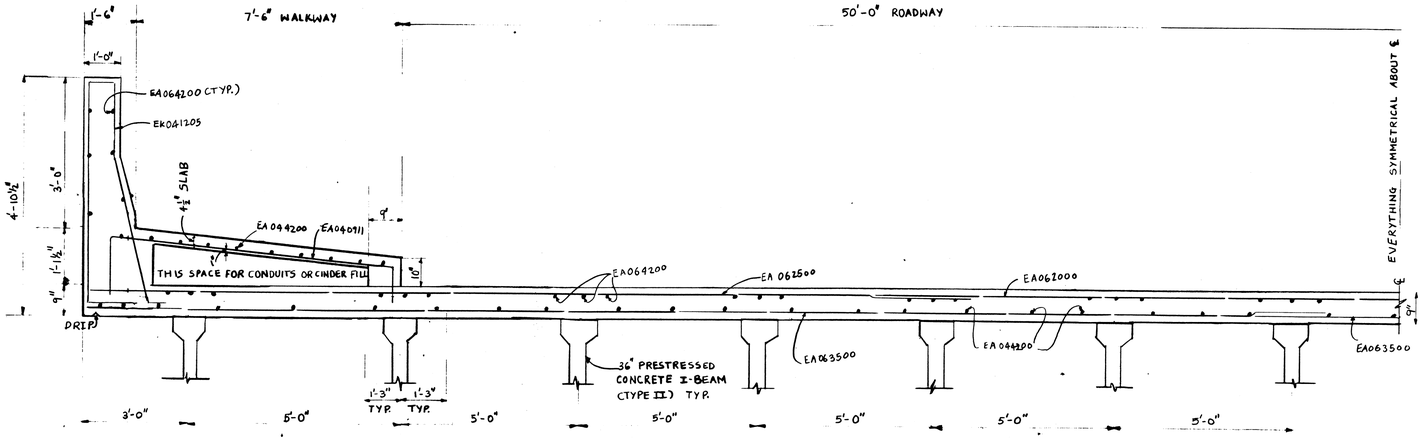

CROSS SECTION OF DECK

SCALE : 1/2" = 1'-0"

SUPERSTRUCTURE CONCRETE QUANTITIES

DESCRIPTION	PAY ITEM NO.	QUANTITY	UNIT
SUPERSTRUCTURE CONCRETE	5030024	234.0	CYD
STEEL REINFORCEMENT, EPOXY COATED	5030031	41,269.0	LBS
FORMING, FINISHING AND CURING SUPERSTRUCTURE CONCRETE	5030027	1.0	LSUM
1.5" ELASTOMERIC BEARING	5040064	130.0	SFT
36" PRESTRESSED CONCRETE I BEAM, FURNISHED	5050015	1,092.0	LFT
36" PRESTRESSED CONCRETE I BEAM, ERECTED	5050016	1,092.0	LFT
BRIDGE RAILING, 1" TUBE ALUMINIUM	5087000	168.0	LFT
PROTECTIVE TREATMENT FOR BRIDGE DECKS	5030053	4,160.0	SFT
PROTECTIVE SEALANT COATING FOR CONCRETE	5030050	12,688.0	SFT
EXPANSION JOINT		58.5	SFT
EXPANSION DEVICE	5030099	136.0	LFT

PRELIMINARY

	date
	dr'n
	ck'd
	ap'vd
	date

revisions

designed by P. SHAH

drawn by P. SHAH

checked by

approved:

CITY OF DETROIT

city engineering department

for

SPINOZA DR BRIDGE

BW270

a.o.

contract no.

sheet of

drawing no.

date