SCALE	HORIZONTAL	BOOK NO. PG.	LEVEL
	VERTICAL	PAVING COMPLETED	DATE

BEFORE STARTING CONSTRUCTION CONTRACTOR MUST CHECK WITH UTILITIES FOR LOCATIONS OF EXISTING STRUCTURES WHETHER OR NOT INDICATED ON PLANS.

BENCH MARKS ELEV

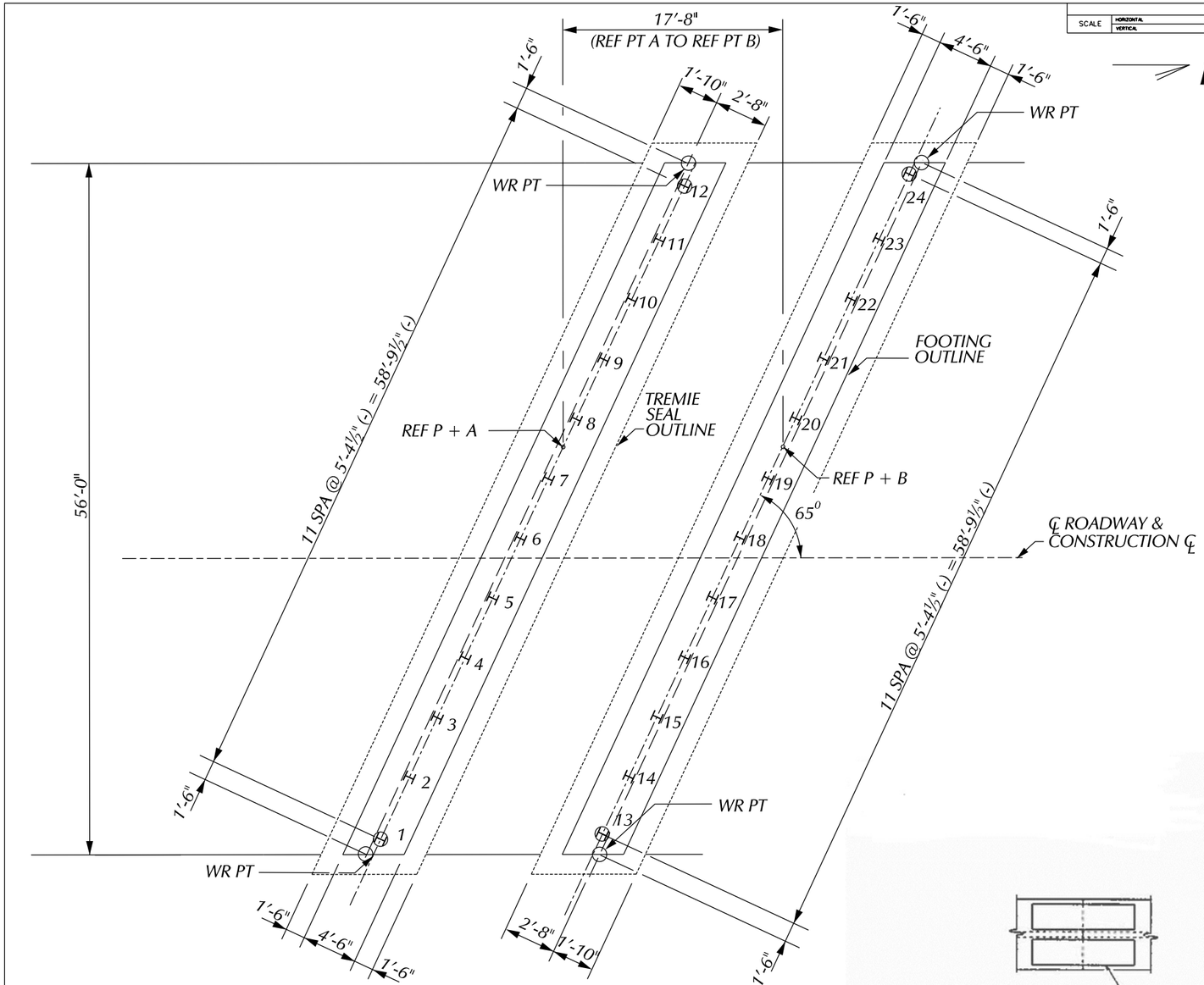

FTG A FTG B

PILE LAYOUT

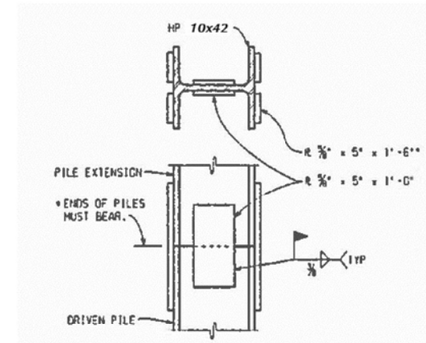

SPLICE DETAILS

* SET PILE EXTENTION IN PLACE WITH SPLICE PLATES ATTACHED TAP SERVERAL TIMES WITH THE HAMMER TO IMPROVE BEARING CONTACT, THEN COMPLETE WELDING OF PLATES TO THE LOWER SECTION.

55 TON STEEL "H" PILES

LOCATION	PILE TYPE	NUMBER OF PILES	ESTIMATED LENGTH FURNISHED & DRIVEN		CUT-OFF ELEV.
			EACH LFT	TOTAL LFT	
FTG A	TEST	2	30	60	566.00
	VERTICAL	10	20	200	566.00
FTG B	TEST	2	30	60	566.00
	VERTICAL	10	20	200	566.00
TOTAL				520	

MISCELLANEOUS QUANTITIES

1 LS	PILE DRIVING EQUIPMENT, FURN
520 FT	PILE STEEL, FURN AND DRIVEN, 10 INCH
4 EA	TEST PILE. STEEL 10 INCH
24 EA	PILE POINT, STEEL

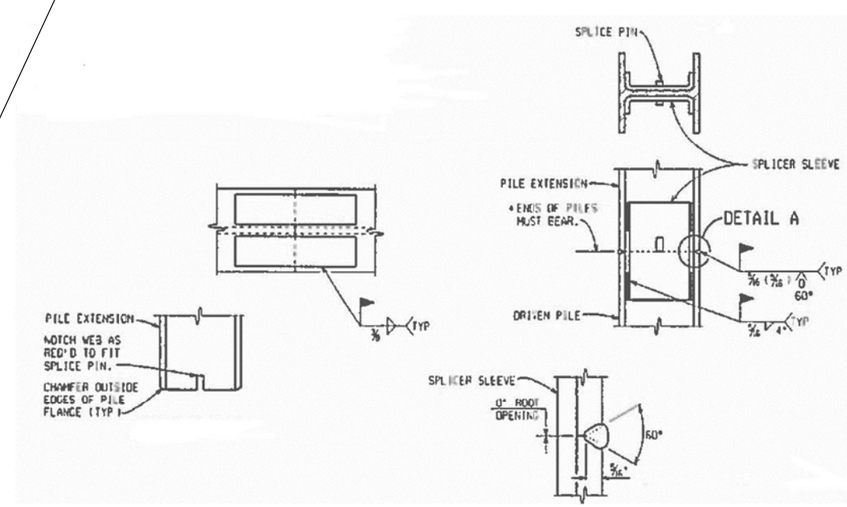

NOTCH DETAIL DETAIL A

ALTERNATE SPLICE DETAILS

* SET PILE EXTENTION IN PLACE WITH SPLICE PLATES ATTACHED TAP SERVERAL TIMES WITH THE HAMMER TO IMPROVE BEARING CONTACT, THEN COMPLETE WELDING OF PLATES TO THE LOWER SECTION.

NOTES:

H - DENOTES VERTICAL PILES.

Ⓗ - DENOTES VERTICAL TEST PILES.

ALL PILES SHALL BE DRIVEN TO A MINIMUM BEARING CAPACITY OF 55 TONS.

STEEL PILES SHALL BE HP 10 X 42.

ESTIMATED PILE PENETRATIONS HAVE BEEN DETERMINED BY USE OF THE STATIC FORMULA.

THE PILE DRIVING FORMULAS IN THE STANDARD SPECIFICATIONS ARE NOT TO BE USED TO DETERMINE BATTERED PILE CAPACITY. BATTERED PILES ARE TO BE DRIVEN TO THE EVEVATION ESTABLISHED FOR VERTICAL FILES.

THE USE OF VIBRATORY HAMMERS FOR INSTALLING H-PILES SHALL NOT BE ALLOWED.

DESCRIPTION	DR	CK	DAPV	DATE
REVISIONS				

	BY	CHECKED BY	APPROVED:
PLAN			ENGINEER OF STREETS
GRADE			
ESTIMATE			
FINAL	SHEET	REVIEW	

CITY OF DETROIT
CITY ENGINEERING DIVISION - D.P.W.
BUREAUS OF STREETS AND HIGHWAYS
FOR

WEST PARKWAY CULVERT OVER ROUGE RIVER

CULVERT H PILE DETAILS

SHEET OF SHEETS
CONTRACT NO.
ASSIGNMENT NO.
DATE