SCALE	HORIZONTAL	BOOK NO. PG.	LEVEL DATE	BEFORE STARTING CONSTRUCTION CONTRACTOR MUST CHECK WITH UTILITIES FOR LOCATIONS OF EXISTING STRUCTURES WHETHER OR NOT INDICATED ON PLANS.
	VERTICAL	PAVING COMPLETED		

BENCH MARKS ELEV

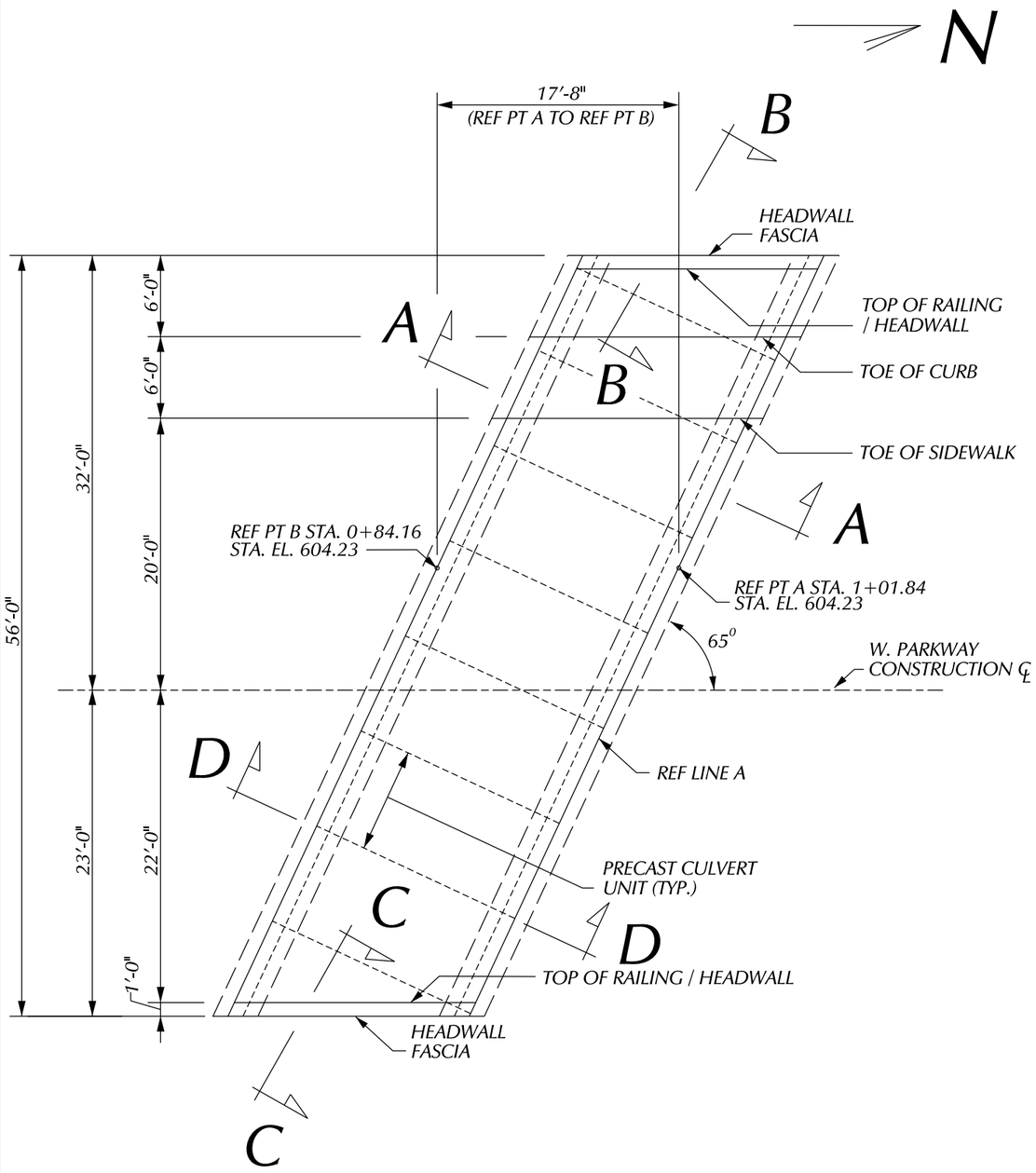

PLAN

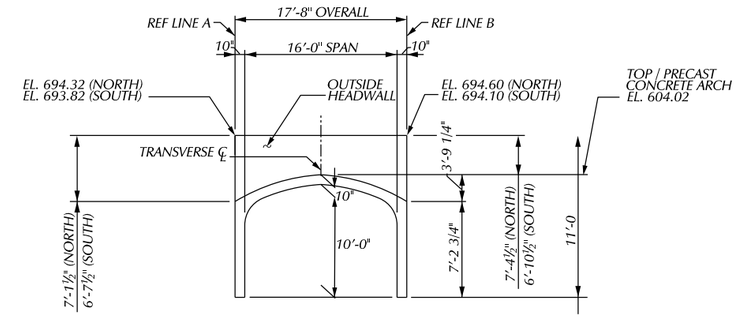

SECTION A-A

(ED BARS NOT SHOWN FOR NORTH HEADWALL)

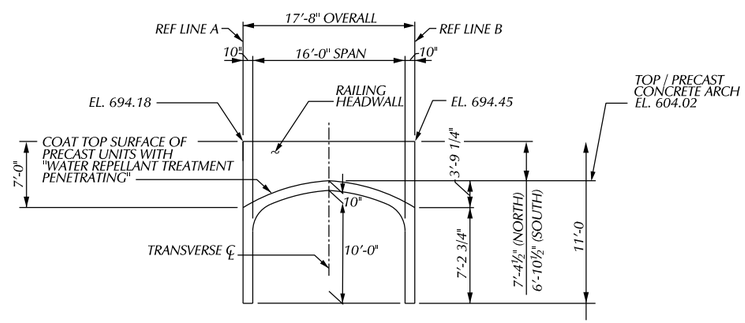

SECTION D-D

(ED BARS NOT SHOWN)

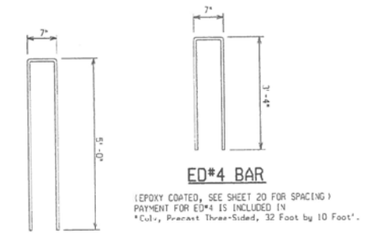

ED#6 BAR

(EPOXY COATED, SEE SHEET 21 FOR SPACING)
PAYMENT FOR ED#6 IS INCLUDED IN
"Culv, Precast Three Sided, 32 Foot by 10 Foot".

ED#4 BAR

(EPOXY COATED, SEE SHEET 20 FOR SPACING)
PAYMENT FOR ED#4 IS INCLUDED IN
"Culv, Precast Three-Sided, 32 Foot by 10 Foot".

MISCELLANEOUS QUANTITIES

___ FT	CULV, PRECAST THREE-SIDED OR ARCH, ___ FOOT BY ___ FOOT	
___ SYD	WATER REPELLANT TREATMENT, PENETRATING	

NOTES:

DESIGN ALL CULVERT / HEADWALL CONNECTIONS FOR TRAFFIC LOADS.

PAYMENT FOR TEXTURING ON HEADWALLS SHALL BE INCLUDED IN, "CULV, PRECAST THREE-SIDED, ___ FOOT BY ___ FOOT. SEE SPECIAL PROVISION FOR TEXTURING CONCRETE. THE FORM LINERS FOR THE HEADWALL MUST BE THE SAME AS THOSE USED ON THE SHEET PILING WALLS.

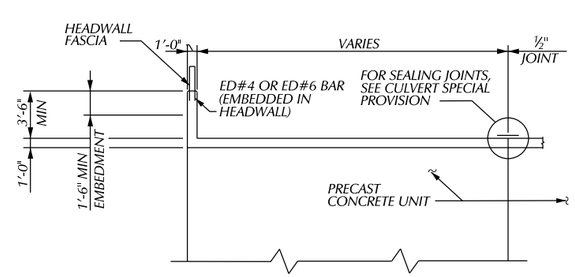

SECTION B-B

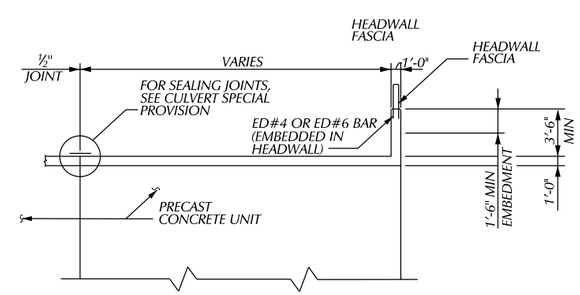

SECTION C-C

DESCRIPTION	DR	NCK	DAPV	DATE
REVISIONS				

	BY	CHECKED BY	APPROVED:
PLAN			ENGINEER OF STREETS
GRADE			
ESTIMATE			
FINAL	SHEET	REVIEW	

CITY OF DETROIT
CITY ENGINEERING DIVISION - D.P.W.
BUREAUS OF STREETS AND HIGHWAYS
FOR

WEST PARKWAY CULVERT OVER ROUGE RIVER

CONCRETE ARCH DETAILS

SHEET OF SHEETS
CONTRACT NO.
ASSIGNMENT NO.
DATE