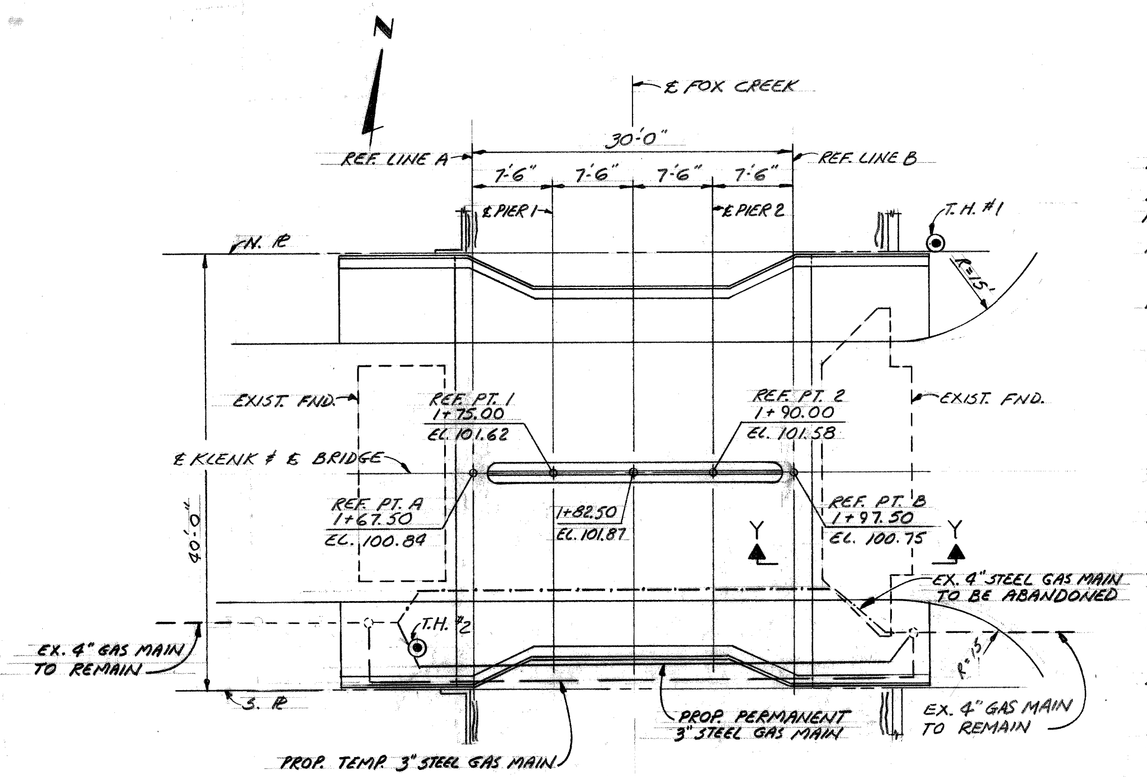

PLAN
SCALE: 1"=10'

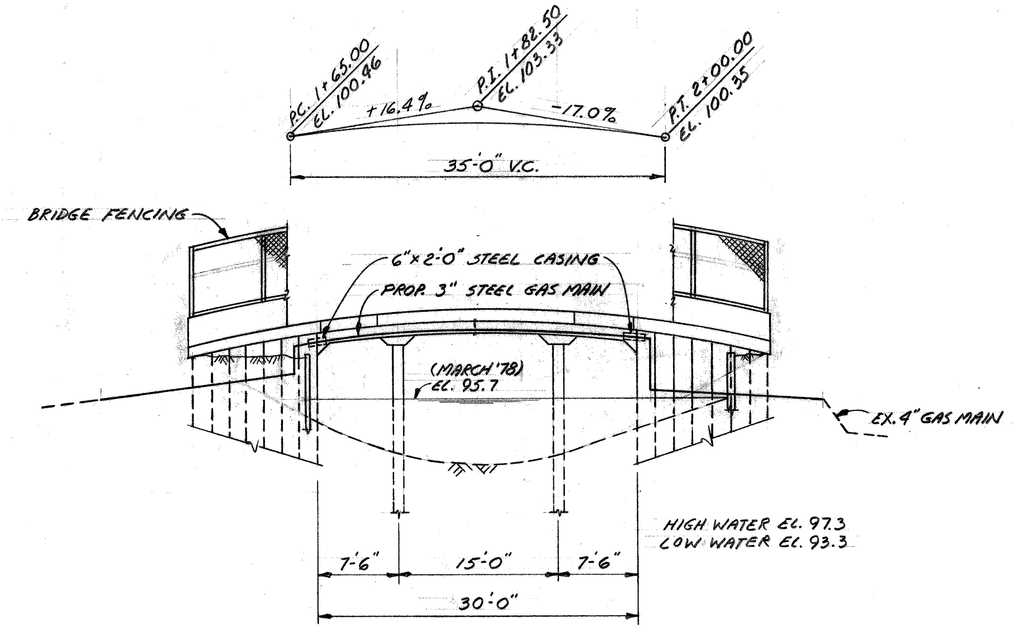

ELEVATION
SCALE: 1"=10'

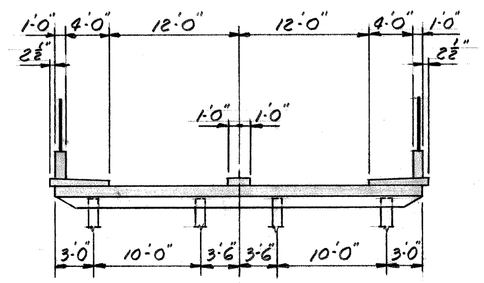

SECTION
SCALE: 1"=10'

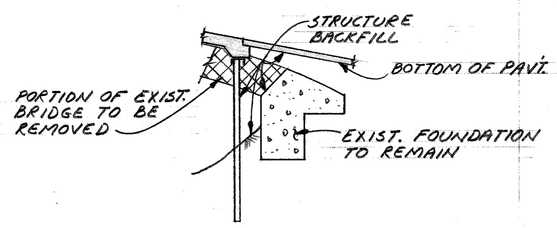

SECTION Y-Y
SCALE: 1"=10'

SOIL BORINGS

TOPO. SEC. NO. 61-A-10
BORING TH 13A
ON S. IR KLENK AVE. 110' W. OF E. IR ALTER RD.
FROM SEWER DRWG. 2-W S.M.#2 OF 13
DATED NOV. 1939

TEST HOLE #1

DEPTH	EL. 99.0±	
N: 4-4-5		STIFF MOIST CLAY & SAND FILL.
N: 2-2-3		FIRM MOIST CLAY & SAND FILL.
N: 3-4-6		MED. COMPACT WET MED. GRAY SAND, WITH SOME ORGANIC CONTENT.
N: 10-19-21	10	FIRM MOIST VARIEGATED CLAY, WITH SAND & PEBBLES.
N: 10-13-16		EXTREMELY STIFF MOIST VARIEGATED CLAY, WITH SAND & PEBBLES.
N: 5-7-9 S: 600	20	EXTREMELY STIFF MOIST BROWN CLAY, WITH SAND & PEBBLES.
N: 6-7-9 S: 403		EXTREMELY STIFF MOIST BLUE CLAY, WITH SAND & PEBBLES.
N: 6-8-10 S: 475	30	STIFF MOIST BLUE CLAY, WITH SAND & PEBBLES.
N: 11-13-19		VERY STIFF MOIST BLUE CLAY, WITH SAND & PEBBLES.
N: 3-4-5 S: 230	40	EXTREMELY STIFF MOIST BLUE CLAY, WITH SAND & PEBBLES.
N: 3-4-5		STIFF MOIST BLUE CLAY, WITH SAND & PEBBLES.
N: 4-4-5	50	
N: 3-4-5 S: 230		
N: 3-4-5 S: 302	60	END OF BORING.

TEST HOLE #2

DEPTH	EL. 99.0±	
N: 1-2-1		LOOSELY COMPACT MOIST MED. BROWN SAND (POSSIBLE FILL).
N: 1-1-1		VERY LOOSE WET MED. BROWN SAND (POSSIBLE FILL).
N: 3-1-2		SLIGHTLY COMPACT WET VARIEGATED SAND, WITH SOME VEGETATION, CLAY & PEBBLES.
N: 10-18-27	10	EXTREMELY STIFF MOIST VARIEGATED CLAY WITH SAND & PEBBLES.
N: 8-11-13		VERY STIFF MOIST VARIEGATED CLAY, WITH SAND & PEBBLES.
N: 4-5-6	20	VERY STIFF MOIST BLUE CLAY, WITH SAND & PEBBLES.
N: 10-18-30		STIFF MOIST BLUE CLAY, WITH SAND & PEBBLES.
N: 81-105-120	30	EXTREMELY STIFF MOIST BLUE CLAY, WITH SAND & PEBBLES. (LAYER OF HARD-PAN FROM 28' TO 33')
N: 10-18-20		
N: 6-8-8	40	
N: 5-5-5		STIFF MOIST BLUE CLAY, WITH SAND & PEBBLES.
N: 5-5-6	50	
N: 5-5-6		
N: 5-6-6	60	END OF BORING.

DEPTH	EL. 98.28	
60		SOFT MOIST BLUE PEBBLY CLAY.
70		
80		EXTREMELY SOFT, WET BLUE PEBBLY CLAY.
90		
100		WET COMPACT GREY SAND (28 TO 48 MESH)
110		BOULDER SHELF
120		WET COMPACT GREY SAND.
130		HARDPAN, SAND & GRAVEL
140		VERY SOFT GREY ANTRIM SHALE ROCK FORMATION NUMEROUS VOIDS FILLED WITH FINE SAND.
150		

NOTES:
N = INDICATES THE NUMBER OF BLOWS REQUIRED TO DRIVE THE 2" Ø SAMPLER 6" (OR AS NOTED) USING A 140 LB. HAMMER FALLING 30".
S = INDICATES TRANSVERSE SHEARING RESISTANCE IN LBS. PER SQ. FT. AS DETERMINED BY M.D.S.H.&T. STANDARD TEST.
THE CHARACTER OF ALL MATERIALS AND THE EXTENT THEREOF AS SHOWN BY BORINGS HAS BEEN OBTAINED BY METHODS AND FROM SOURCES BELIEVED TO BE RELIABLE. THE EXACTNESS OF THIS INFORMATION IS, HOWEVER, IN NO CASE GUARANTEED.

CONSTRUCTION BENCH MARKS

C.B.M. #1 - TOP OF ARROW ON HYDRANT S. SIDE KLENK AVE. OPP. HOUSE # 14705 EL. 99.60.
C.B.M. #2 - SPIKE IN POLE N. SIDE KLENK AVE. OPP. HOUSE # 14621 EL. 97.73.
GOV'T. B.M. D-1 - S.W. CORNER OF FOX CREEK BRIDGE EL. 104.42.

GENERAL NOTES

THE DESIGN OF THIS STRUCTURE IS BASED ON CURRENT AASHTO STANDARD SPECIFICATIONS FOR HIGHWAY BRIDGES H20-44 LOADING.

EXCEPT WHERE OTHERWISE INDICATED ON THESE PLANS OR IN THE PROPOSAL AND SUPPLEMENTAL SPECIFICATIONS CONTAINED THEREIN, ALL MATERIALS AND WORKMANSHIP SHALL BE IN ACCORDANCE WITH THE M.D.S.H.&T. STANDARD SPECIFICATIONS FOR HIGHWAY CONSTRUCTION 1976 EDITION.

THE DESIGN OF THE STRUCTURAL MEMBERS IS BASED ON MATERIAL OF THE FOLLOWING GRADES AND STRESSES:

CONCRETE: GRADE 45D	f_c' = 3000 P.S.I.
STEEL REINFORCEMENT	f_y = 60,000 P.S.I.
STRUCTURAL STEEL: A36	F_y = 36,000 P.S.I.

SILT AND OTHER UNSUITABLE MATERIAL BELOW ROADWAY SLAB, AND BETWEEN WINGWALLS AT ABUTMENTS ARE TO BE REMOVED, AND BACKFILLED WITH STRUCTURE BACKFILL AS DIRECTED BY THE ENGINEER.

WATER LEVEL IS SUBJECT TO CHANGE. THE CONTRACTOR IS RESPONSIBLE FOR MAKING HIS OWN DETERMINATION OF WATER LEVEL THAT WILL EXIST DURING CONSTRUCTION.

POST #	SLOPE
1 & 2	2:12
3	1⅞:12
4	1:12
5	0:12

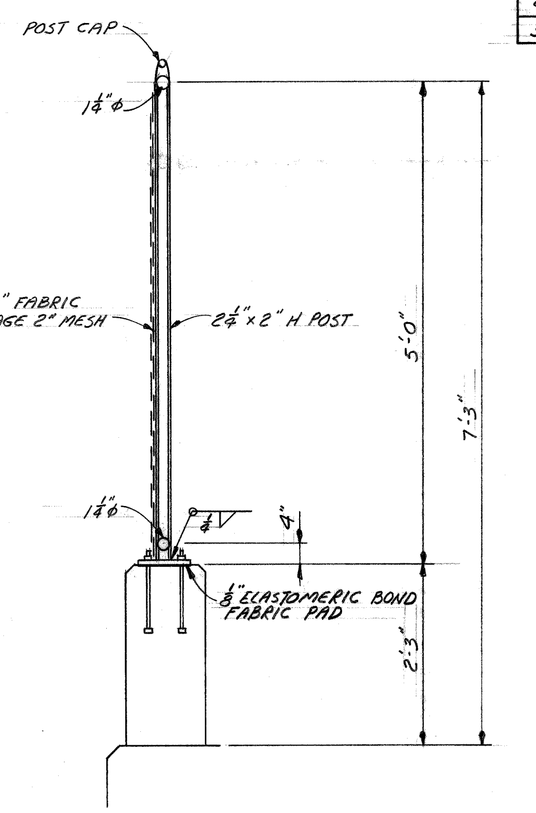

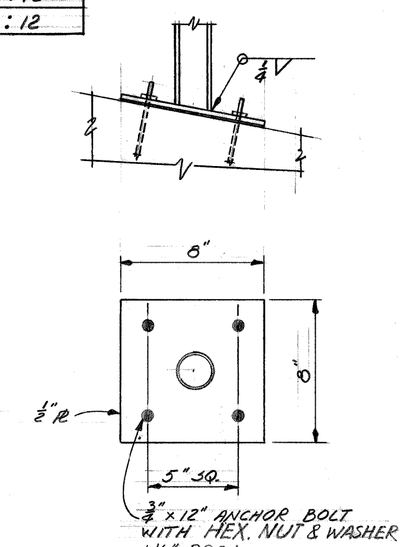

BASE PLATE DETAIL
SCALE: 2"=1'-0"

BRIDGE FENCING - SOLID PARAPET TYPE
(N.T.S.)

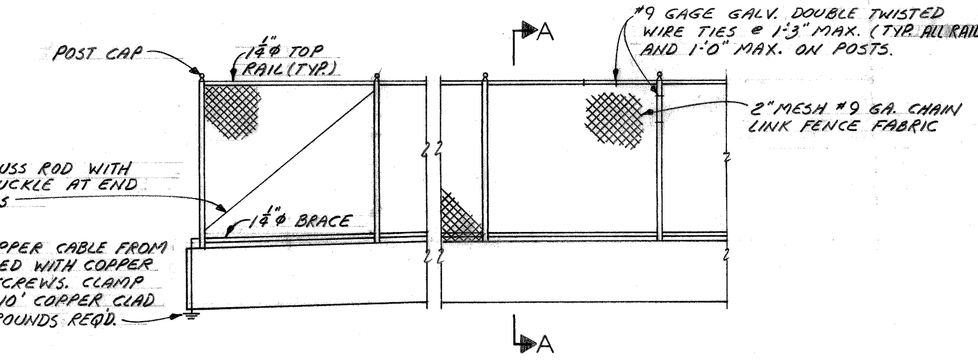

ELEVATION - BRIDGE FENCING
(N.T.S.)

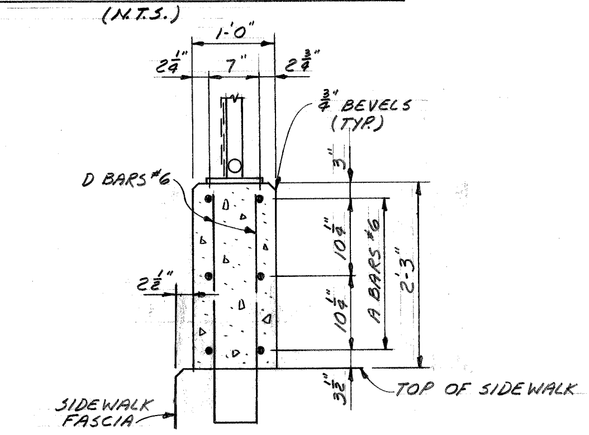

SECTION A-A
SCALE: ¾"=1'-0"

NOTES:
THE CHAIN LINK FENCE AND FRAMING SHALL CONFORM TO THE M.D.S.H.&T. SPECIFICATIONS FOR HIGHWAY CONSTRUCTION 1976 EDITION.
DIMENSIONS ARE HORIZONTAL ALONG ℄ FENCING POSTS.
THE POSTS SHALL BE 2½"x2" STEEL H POSTS WEIGHING 9.1 LBS. PER FT. GALVANIZED. NOMINAL 1⅞"Ø PIPE SHALL BE 1⅞" OUTSIDE DIAMETER STEEL PIPE OR TUBING WEIGHING 2.27 LBS. PER FT. GALVANIZED.
POSTS AND TUBING SHALL BE FURNISHED WITH THE MANUFACTURERS STANDARD CONNECTIONS AND ITS MINIMUM WEIGHT SHALL BE WITHIN 5% OF THAT SPECIFIED. TUBING SHALL BE BENT IN THE SHOP AS SHOWN ON THE PLANS. THE ENCLOSURE POSTS SHALL BE PLACED VERTICALLY.

ALL COMPONENTS ARE TO BE GALVANIZED AFTER FABRICATION. BOLTS, NUTS AND WASHERS ARE TO BE GALVANIZED IN ACCORDANCE WITH A.S.T.M. DESIGNATION A153.
ALL FABRIC FOR CHAIN LINK FENCE SHALL BE FURNISHED WITH KNUCKLING OF BOTH SELVAGES.
ALL FENCE FABRIC SHALL BE #9 GAGE 2" MESH.
ROUND POSTS HAVING AN OUTSIDE DIAMETER OF 2.875" AND WEIGHT OF 5.79 LBS. PER FT. MAY BE USED AT THE TENSIONING POSTS.

BW-297

revisions

approved
T. E. McManus — STRUCTURAL ENGINEER
W. A. Lawrence — HEAD, PUBLIC ENGINEER
[illegible] — CITY ENGINEER

date 1-79
designed T.M./N.C.
drawn A.G.
checked M.C.

CITY OF DETROIT
CITY ENGINEERING
EP & MD
FOR THE ENVIRONMENTAL PROTECTION & MAINTENANCE DEPARTMENT

KLENK AVE. BRIDGE OVER FOX CREEK

GENERAL DRAWING, SOIL BORINGS & FENCING DETAILS

contract: PW-6602

sheet: 2 of: 10 drawing:

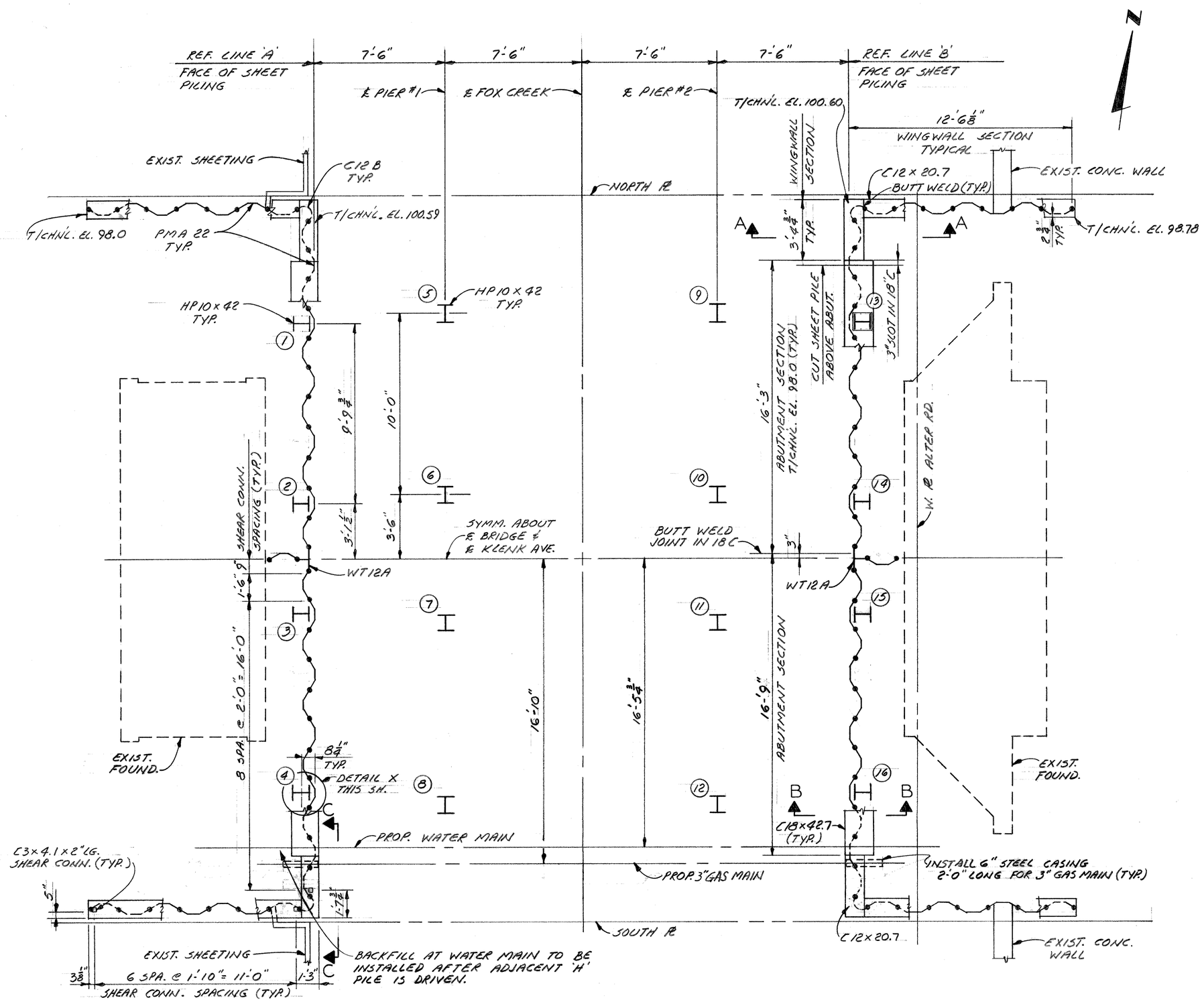

FOUNDATION PLAN
SCALE: ¼" = 1'-0"

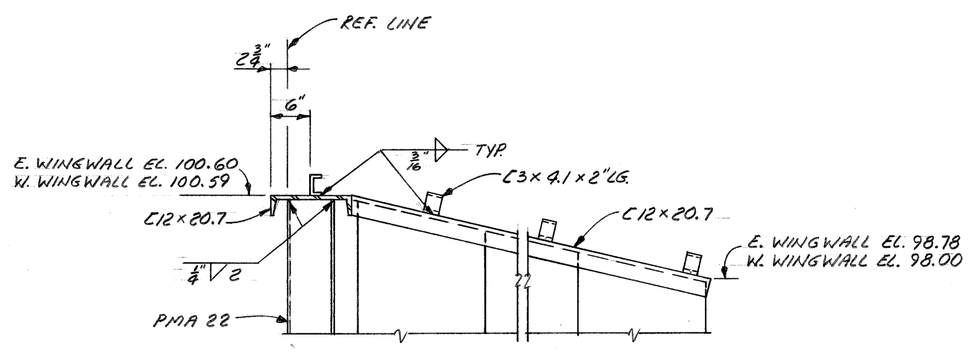

SECTION A-A
SCALE: ⅜" = 1'-0"

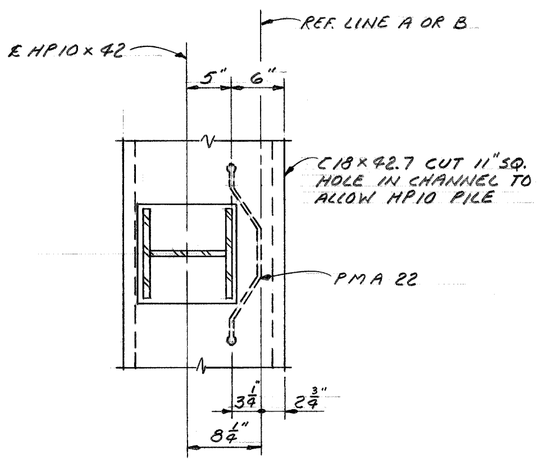

DETAIL X
SCALE: 1" = 1'-0"

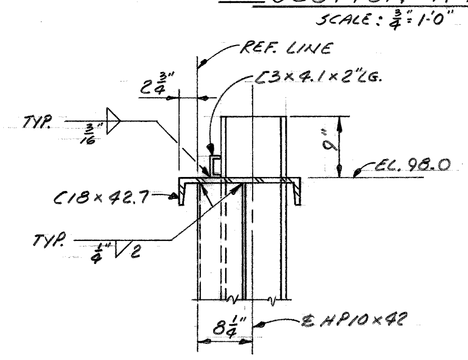

SECTION B-B
SCALE: ⅜" = 1'-0"

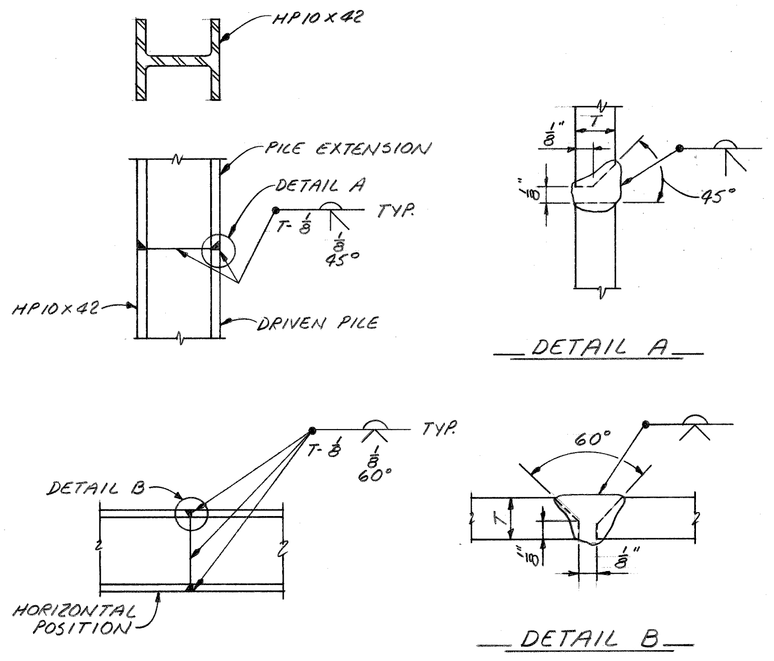

BUTT WELD SPLICE DETAIL

NOTE: USE DETAIL A WHEN WELDING PILES IN PLACE (HORIZ. JOINT). USE DETAIL B FOR WELDING WHEN PILE IS IN HORIZ. POSITION.

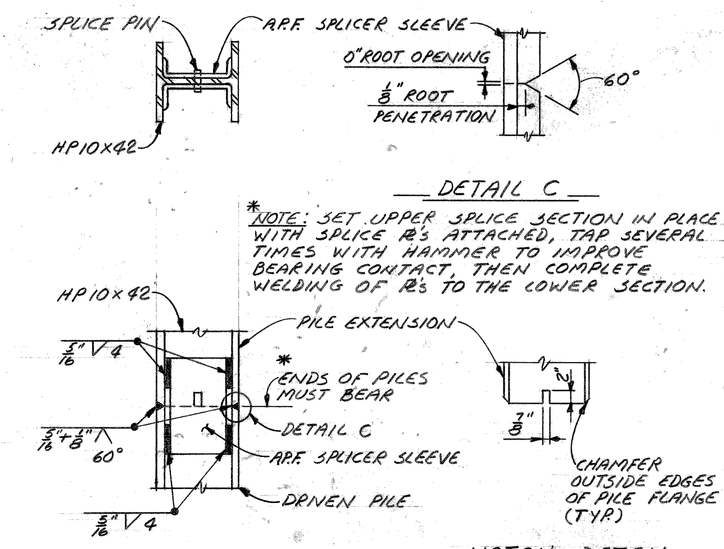

NOTCH DETAIL

ALTERNATE SPLICE DETAILS
(A.P.F. = ASSOCIATED PIPE & FITTING COMPANY)

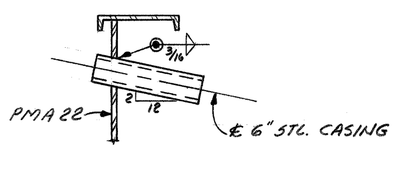

SECTION X-X

PILE QUANTITIES				
ITEM	UNIT	AMOUNT		TOTAL
		PIER	ABUT.	
EST. LENGTH OF EA. PILE - FURN. & DRIVEN	LIN. FT.	136	135	-
STEEL H PILES	EACH	8	8	-
STEEL H PILES FURNISHED & DRIVEN	LIN. FT.	1088	1080	2168
STEEL TEST PILE (EST.)	LIN. FT.	148	-	-
SPLICES - STEEL H PILE	EACH	28	28	56

NOTES:

ALL PILES SHALL BE DRIVEN TO A MINIMUM BEARING CAPACITY OF 50 TONS.
STEEL H PILES SHALL BE HP10 x 42.
PILES SHALL BE DRIVEN IN ACCORDANCE WITH THE M.D.S.H.&T. STANDARD SPECIFICATION.
PILES ARE TO BE DRIVEN TO SUCH ACCURACY THAT THE ENDS OF THE PILES TO BE EMBEDDED IN THE CONCRETE ARE WITHIN 1⅛" OF THE LOCATION SHOWN ON THE PLANS.
MINIMUM PILE PENETRATION EL. 98.0.
ALL PIER H PILES ABOVE EL. 85.0, ALL STEEL SHEET PILING, CHANNELS, AND ANY STRUCTURAL MATERIALS TO BE EXPOSED SHALL BE GALVANIZED IN ACCORDANCE WITH M.D.S.H.&T. STANDARD SPECIFICATION 5.04.22.
DAMAGED GALVANIZED SURFACES AND ALL FIELD WELDS SHALL BE REPAIRED IN ACCORDANCE WITH M.D.S.H.&T. STANDARD SPECIFICATION 5.12.05.
NO SPLICING WILL BE PERMITTED WITHIN THE GALVANIZED PORTION OF THESE PILES.
CONTRACTOR SHALL PROVIDE SHOP DRAWINGS FOR ALL PILING INCLUDING ANY FORM SUPPORTS WHICH MAY BE EMBEDDED IN THE CONCRETE SLAB. ALL SUCH ITEMS SHALL BE GALVANIZED.
LENGTH OF STEEL SHEET PILING TO BE 15 FEET, EXCEPT ADJACENT TO WATER MAIN WHICH SHALL BE 20 FEET.

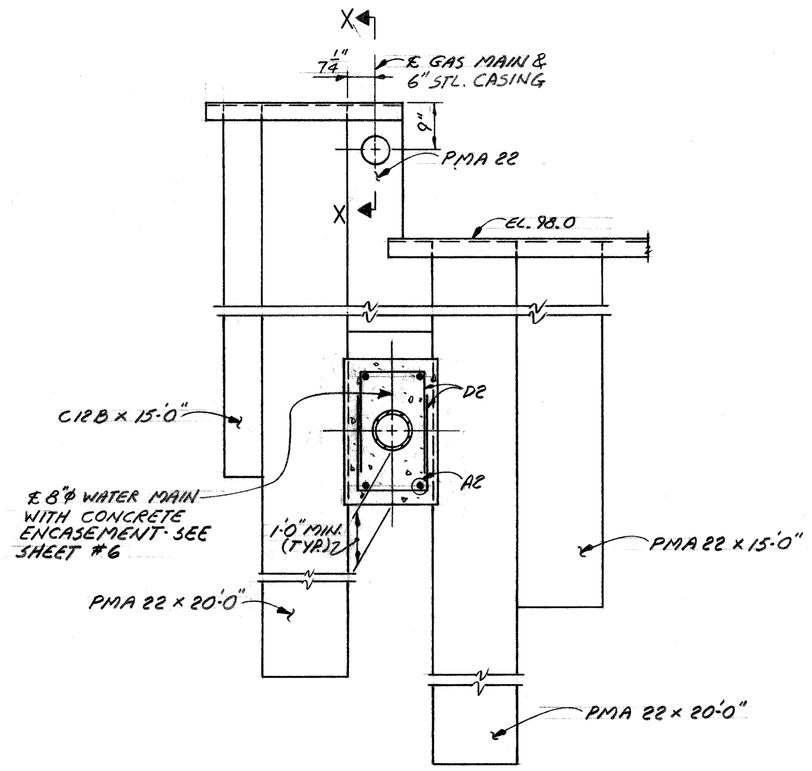

SECTION C-C
SCALE: ⅜" = 1'-0"

revisions

approved
T. E. McGlynn
STRUCTURAL ENGINEER
HEAD, CIVIL ENGINEER
CITY ENGINEER

date 1-79
designed T.M./M.C.
drawn A.G.
checked M.C.

CITY OF DETROIT
CITY ENGINEERING
E.P. & M.D.
FOR THE ENVIRONMENTAL PROTECTION & MAINTENANCE DEPARTMENT

KLENK AVE. BRIDGE OVER FOX CREEK

FOUNDATION PLAN & DETAILS

contract: PW-6602

sheet: 4 of: 10
drawing:

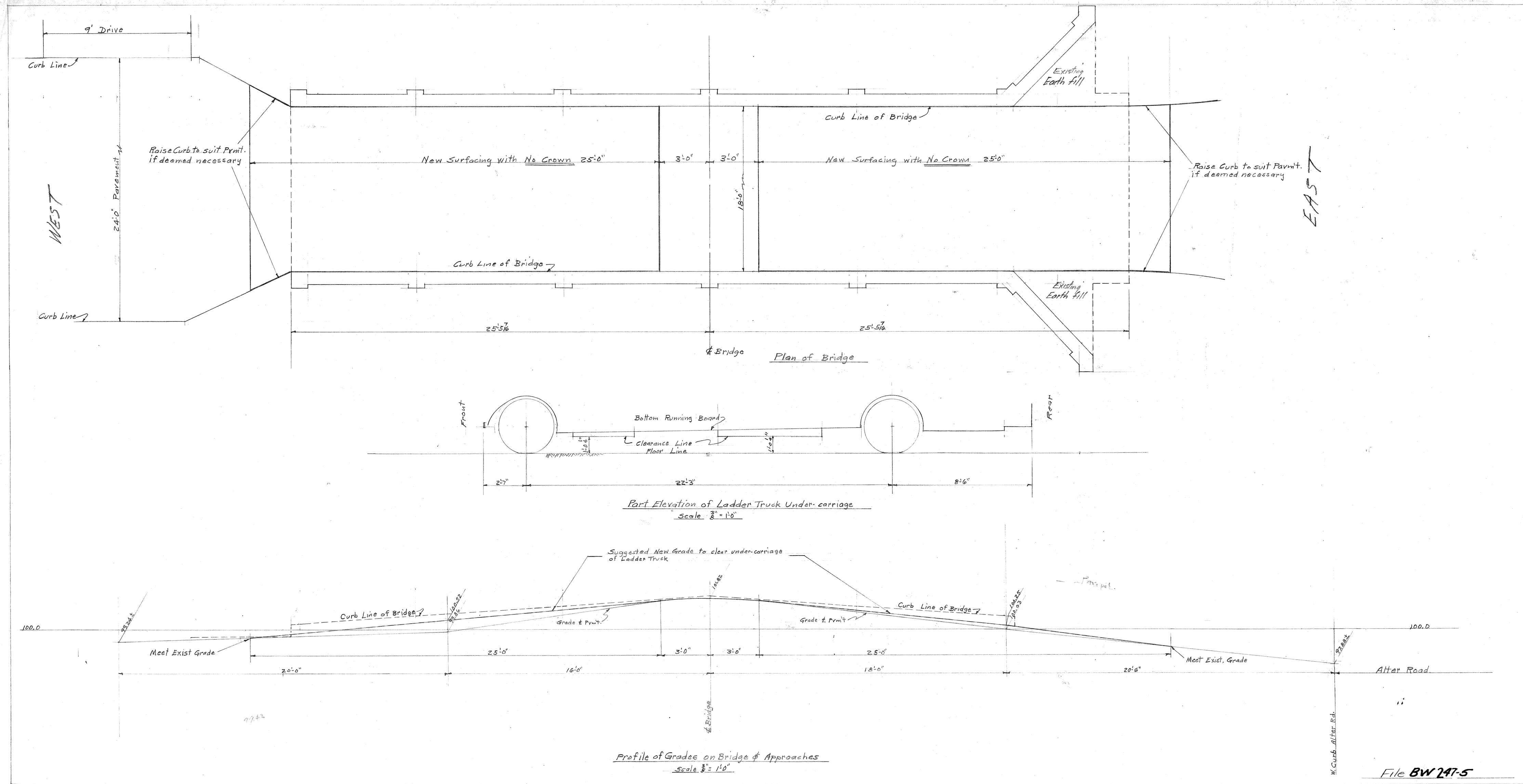

File BW 247-5

DRAWN BY	R.H. Speck	APPROVED	J. L. Barton
CHECKED BY	J. L. Barton	CITY ENGINEER	G. R. Thompson

CITY OF DETROIT
DEPARTMENT OF PUBLIC WORKS
CITY ENGINEERS OFFICE

KLENK AVE. BRIDGE AT ALTER ROAD

CHANGE IN GRADE
TO SUIT D.F.D. LADDER TRUCK

DRWG No. C-1658
DATE 6-14-51