CITY OF DETROIT

KWAME M. KILPATRICK – MAYOR

CITY ENGINEERING DIVISION
DEPARTMENT OF PUBLIC WORKS

72 HOURS
(3 WORKING DAYS)
BEFORE YOU DIG
CALL MISS DIG
800-482-7171
(TOLL-FREE)

THE CITY OF DETROIT
SPERAMUS MELIORA
RESURGET CINERIBUS
MICHIGAN

ASHLAND AVE. INDEX OF SHEETS

PLANS

TITLE SHEET	A1
GENERAL PLAN OF SITE	A2
LOG OF BORINGS	A3
GENERAL PLAN OF STRUCTURE	A4
FOOTING DETAILS	A5
MISCELLANEOUS DETAILS	A6
SUPERSTRUCTURE DETAILS	A7, A8
PRECAST CULVERT SPECIFICATIONS	A9
STEEL REINFORCEMENT	A10
STEEL REINFORCEMENT AND QUANTITIES	A11
DETOUR PLAN	A12

MDOT STANDARD PLANS

CHAIN LINK FENCE, FABRIC HEIGHT = 3048	R-98A
LIGHTED ARROWS AND BARRICADES	R-125A
SOIL EROSION AND SEDIMENTATION CONTROL MEASURES	R-96A
SEEDING AND SODDING	R-100B
MOLDING, BEVEL, LIGHT STANDARD ANCHOR BOLT ASSEMBLY AND NAME PLATE DETAILS	B-103B
BRIDGE RAILING, SOLID PARAPET TYPE	B-18B
BRIDGE RAILING, 1 TUBE	B-24A

CITY OF DETROIT STANDARD PLANS (3-7-98)

TYPE IIIR INTEGRAL CURB	C-4380
TYPICAL PAVEMENT CROSS SECTION	C-4381
LOCATION OF TRANSVERSE EXPANSION AND CONTRACTION JOINT	C-4492

PLANS FOR PROPOSED

REPLACEMENT OF THE ASHLAND AVE. BRIDGE OVER FOX CREEK

(BW-245), FEDERAL STRUCTURE NO. 0024400B01

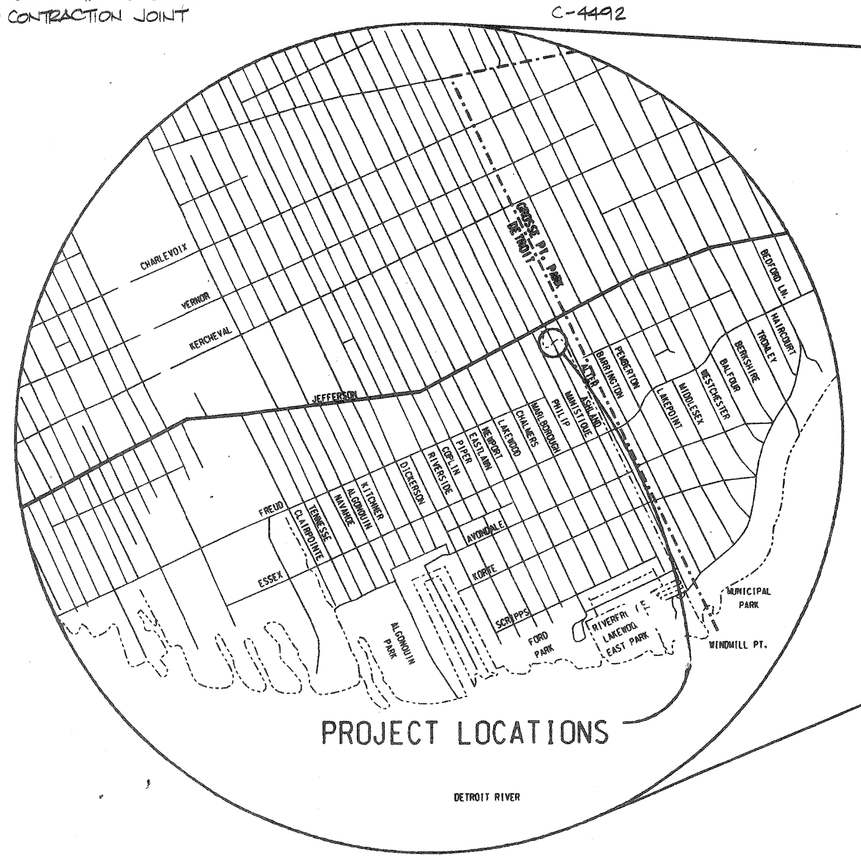

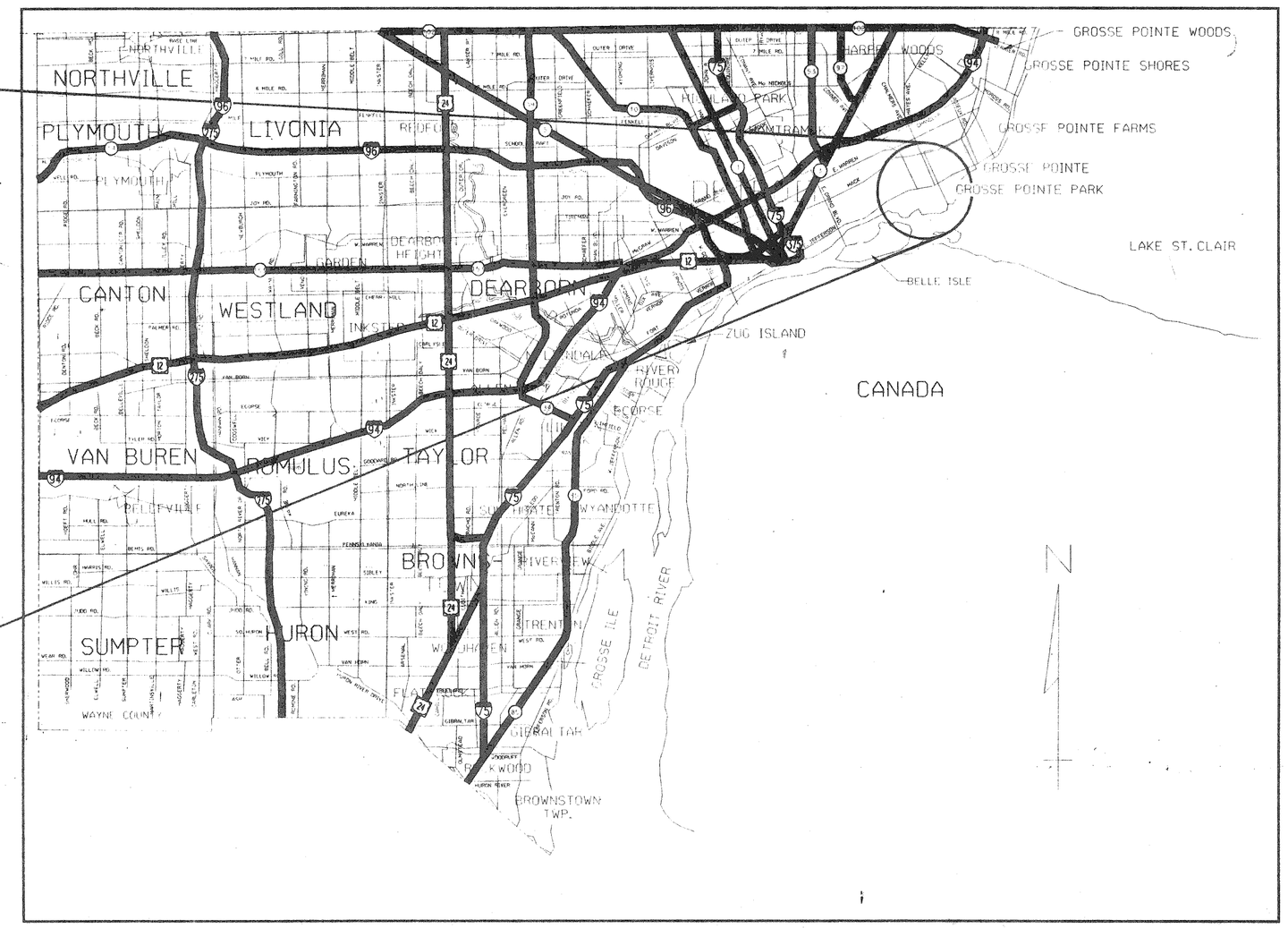

THE DESIGN OF THIS STRUCTURE IS BASED ON CURRENT AASHTO STANDARD SPECIFICATIONS FOR HIGHWAY BRIDGES MS18 LOADING. LIVE LOAD PLUS IMPACT DEFLECTION DOES NOT EXCEED 1/1000 OF THE SPAN LENGTH. THE LOAD FACTOR METHOD OF DESIGN WAS USED FOR THIS STRUCTURE.

EXCEPT WHERE OTHERWISE INDICATED ON THESE PLANS, THE PROPOSAL, AND SUPPLEMENTAL SPECIFICATIONS CONTAINED HEREIN, ALL MATERIALS AND WORKMANSHIP SHALL BE IN ACCORDANCE WITH THE MICHIGAN DEPARTMENT OF TRANSPORTATION STANDARD SPECIFICATIONS FOR CONSTRUCTION 1996 EDITION.

THE STATIONING AS SHOWN ON THESE PLANS FOR THE INTERSECTION OF THE CENTERLINE OF BRIDGE AND ROADWAY CENTERLINE IS BELIEVED TO BE CORRECT. IT SHALL, HOWEVER, BE CHECKED AT THE TIME OF STARTING CONSTRUCTION, AND IF THE STATIONING SHOWN ON THE PLANS IS INCORRECT IT SHALL BE REPORTED TO THE DESIGN OFFICE IN DETROIT, AND THE STRUCTURE SHALL BE STAKED OUT USING THE ACTUAL INTERSECTION OF THE CENTERLINE OF THE BRIDGE AND ROADWAY CENTERLINE AS THE CONTROL POINT.

ALL EXPOSED CONCRETE CORNERS SHOWN SQUARE ON THE PLANS SHALL BE BEVELED WITH 13 mm TRIANGULAR MOLDINGS EXCEPT AS OTHERWISE NOTED.

THE DESIGN OF THE STRUCTURAL MEMBERS IS BASED ON MATERIAL OF THE FOLLOWING GRADES AND STRESSES.

CONCRETE:	GRADE S2	f'c = 21 MPa
CONCRETE:	GRADE D	f'c = 28 MPa
STEEL REINFORCEMENT:		fy = 400 MPa

ALL DIMENSIONS ON THESE PLANS ARE IN MILLIMETERS EXCEPT AS NOTED.

PROJECT:
REMOVAL AND REPLACEMENT OF THE STRUCTURES AT

CONTRACT NO.

PLANS PREPARED BY
SNELL ENVIRONMENTAL GROUP, INC.
FOR
CITY ENGINEERING DIVISION

STATE OF MICHIGAN
RONALD G. WOOLF
23348
REGISTERED PROFESSIONAL ENGINEER

RECOMMENDED FOR APPROVAL	STRUCTURAL ENGINEER	DATE 12-16-99
RECOMMENDED FOR APPROVAL	BUILDINGS AND BRIDGES ENGINEER	DATE 12/16/99
APPROVED	HEAD ENGINEER	DATE 12/15/99
APPROVED	CITY ENGINEER	DATE 12/15/99

DATE

DRWG. NO.

METRIC

DIMENSIONS ARE IN MILLIMETERS UNLESS OTHERWISE SHOWN. ELEVATIONS, COORDINATES, CURVE AND ALIGNMENT DATA ARE IN METERS. STATIONS ARE IN KILOMETERS + METERS.

REVISIONS			
	DSGN BY	M.A.M.	5-97
	DR'N BY	R.J.D.	5-97
	CK'D BY	R.G.W.	5-97
	FINAL CK'D BY	M.D.W.	2-99
	APP'D BY		

SEG
SNELL ENVIRONMENTAL GROUP, INC. A DLZ Company
151 W. CONGRESS, SUITE 328
DETROIT, MICHIGAN 48226
TELEPHONE (313) 961-4040

DETROIT
Making it better for you

CITY OF DETROIT
MICHIGAN

ASHLAND AVE. OVER FOX CREEK (BW-245)

TITLE SHEET

SCALE NOT TO SCALE
PROJECT NO. 9641-5160-01
SHEET NO. A1 OF 22

FILE NAME: TITLE01.DGN

h:\96415160.01\bridge\final\title Feb. 2, 1999 14:13:57

UTILITIES

ELECTRIC
DETROIT EDISON
2000 SECOND AVE.
ROOM 607 G.O., DETROIT, MICHIGAN 48226
ATTN.: JOHN SQUIRES
PHONE No.: (313) 235-6597

TELEPHONE
AMERITECH
4000 ALLEN RD., ROOM 101
ALLEN PARK, MICHIGAN 48101
ATTN.: DAVE BUCIENSKI
PHONE No.: (313) 389-9819

GAS
MICHIGAN CONSOLIDATED GAS CO.
DRAFTING CLERK
MAIN REPLACEMENT TEAM
NOBLE SECOND FLOOR
3200 HOBSON
DETROIT, MICHIGAN 48201
PHONE No.: (313) 577-7236

WATER & SEWAGE
CITY OF DETROIT WATER & SEWERAGE DEPARTMENT
735 RANDOLPH ST.
DETROIT, MICHIGAN 48226
PHONE No.: (313) 224-4800

LIGHTING
CITY OF DETROIT PUBLIC LIGHTING DEPARTMENT
9449 GRINNEL
DETROIT, MICHIGAN 48226
PHONE No.: (313) 267-7336

EXISTING STRUCTURE

ONE - SPAN REINFORCED CONCRETE ARCH STRUCTURE MEASURING 11.28 METERS REFERENCE LINE TO REFERENCE LINE. BUILT IN 1917, 7925 mm CLEAR ROADWAY.

BENCH MARK

B.M. #61-255A ELEV. 174.776
MONUMENT BOX IN SIDEWALK, NORTHEAST QUADRANT OF SCRIPPS AND PHILIP

B.M. #62-254A ELEV. 174.852
MONUMENT BOX IN SIDEWALK, NORTHEAST QUADRANT OF AVONDALE AND PHILIP

PROPOSED REPLACEMENT ASHLAND AVE. BRIDGE
MDOT - B01 OF 244
CITY - BW-245

WITNESSES

WITNESS TO SURVEY ℄ STA. 9+900		(MAG NAIL)
N 20° E	N & S IN W. SIDE 508 mm MAPLE	8.580 m
S 50° E	N & S IN W. SIDE 508 mm MAPLE	9.370 m
S 20° W	POWER POLE	8.334 m

WITNESS TO SURVEY ℄ STA. 10+100		(MAG NAIL)
N 10° E	CENTER OF PHONE BOX	22.050 m
S 50° E	N & S IN W. SIDE POWER POLE	12.100 m
S 20° W	FENCE CORNER	14.430 m

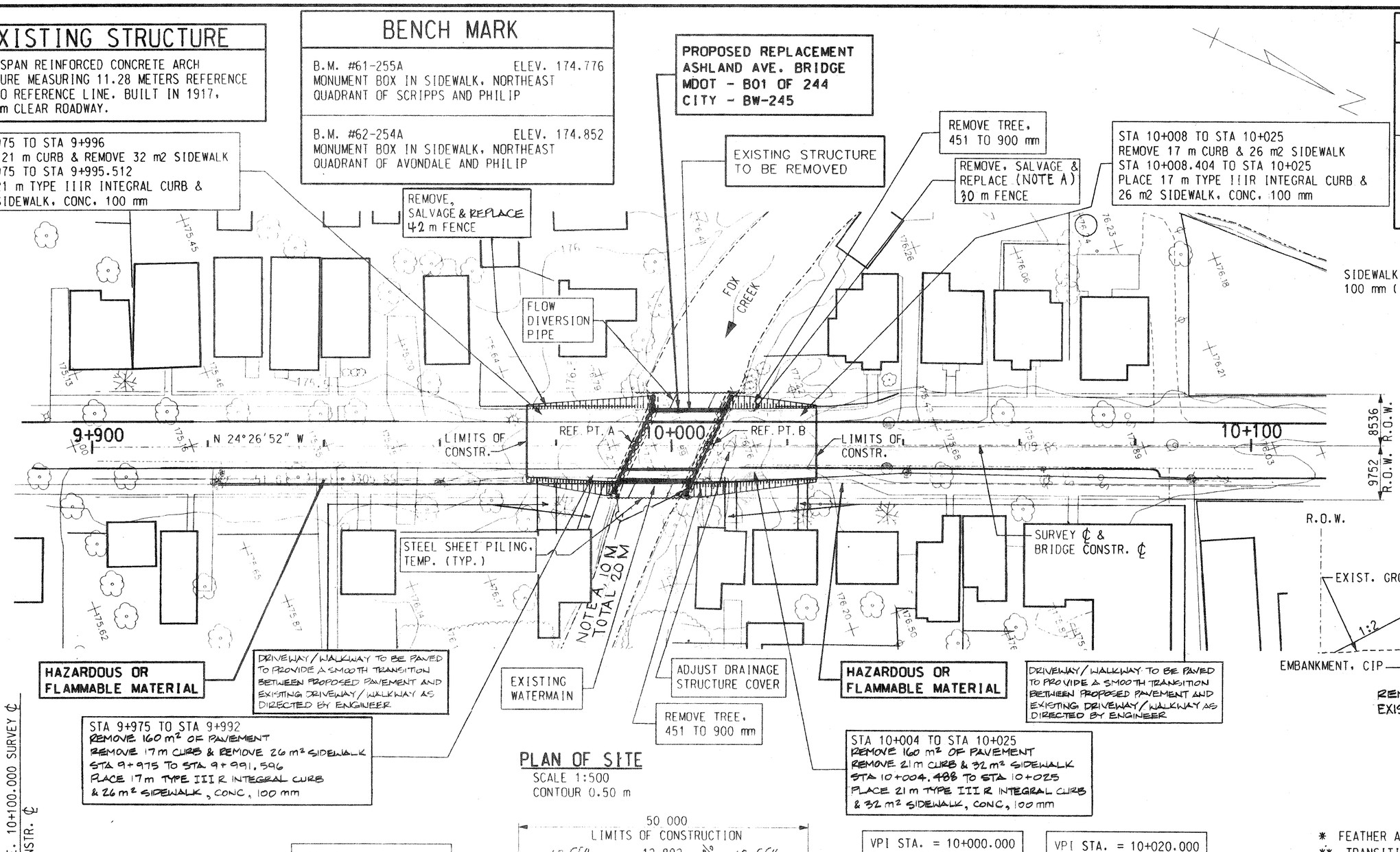

PLAN OF SITE
SCALE 1:500
CONTOUR 0.50 m

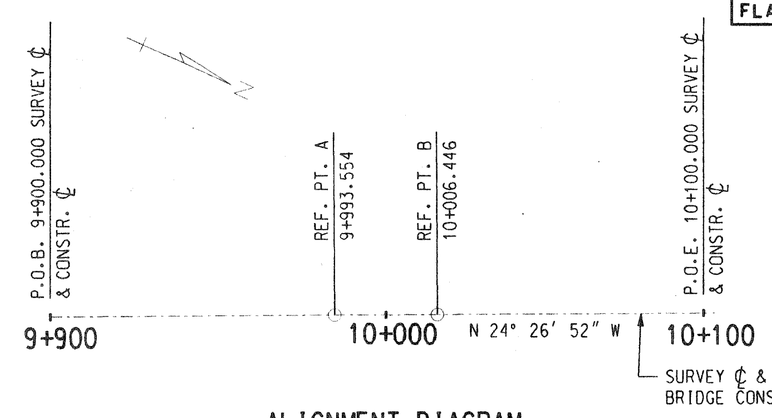

ALIGNMENT DIAGRAM

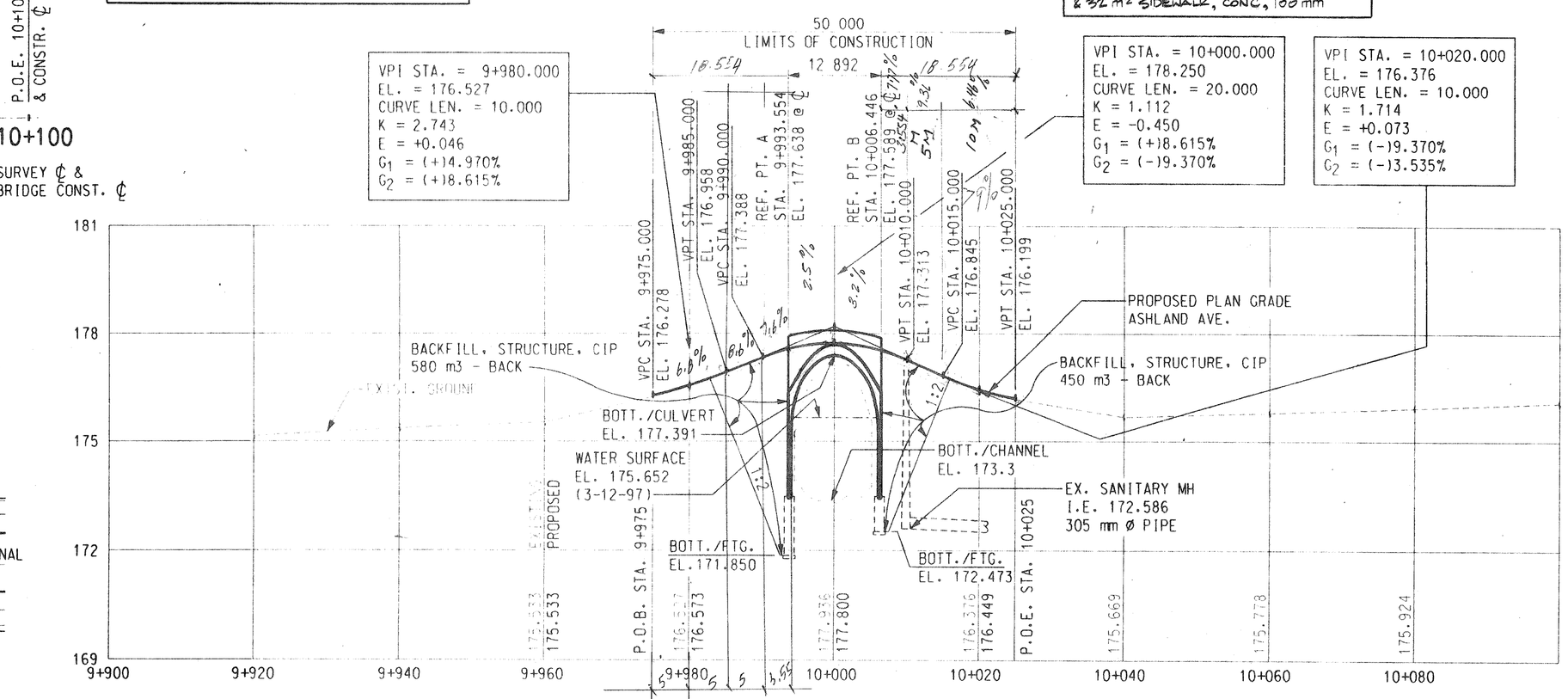

PROFILE ALONG ℄ SURVEY ASHLAND AVE.
VERT. SCALE 1:100
HORIZ. SCALE 1:500

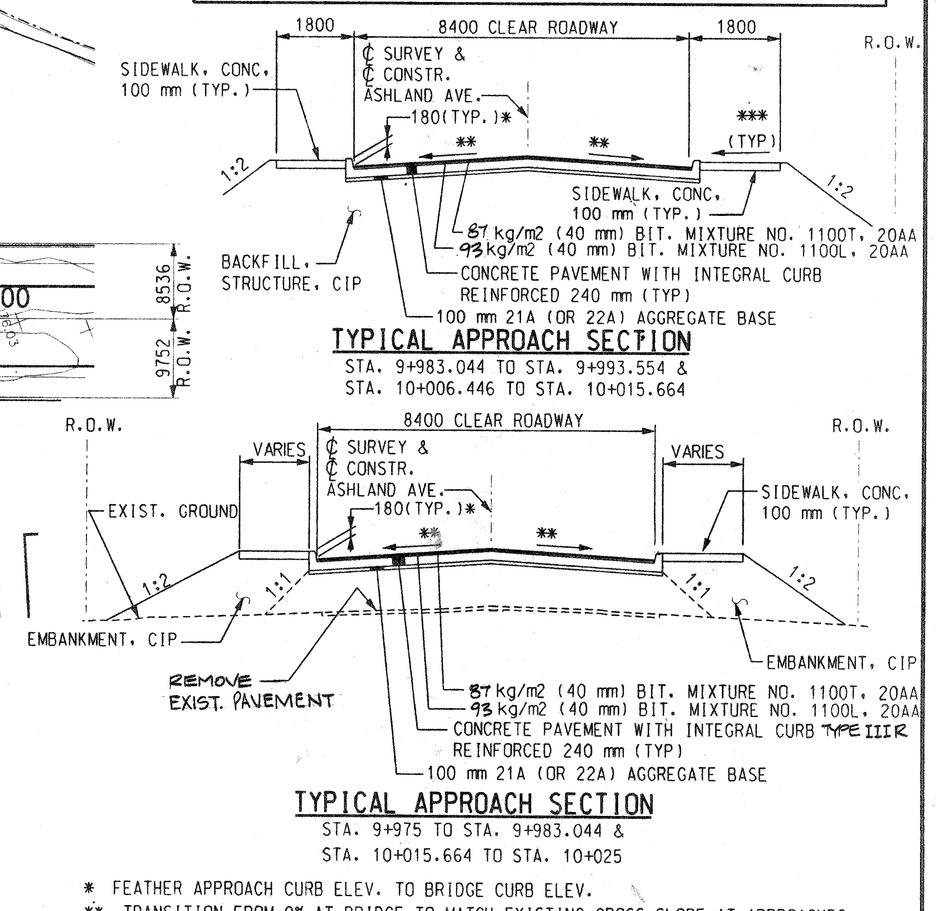

TYPICAL APPROACH SECTION
STA. 9+983.044 TO STA. 9+993.554 &
STA. 10+006.446 TO STA. 10+015.664

TYPICAL APPROACH SECTION
STA. 9+975 TO STA. 9+983.044 &
STA. 10+015.664 TO STA. 10+025

* FEATHER APPROACH CURB ELEV. TO BRIDGE CURB ELEV.
** TRANSITION FROM 0% AT BRIDGE TO MATCH EXISTING CROSS-SLOPE AT APPROACHES.
*** 31 mm/m OR AS DIRECTED BY THE ENGINEER (21 mm/m MIN. 62 mm/m MAX). TRANSITION TO 0% AT BRIDGE.

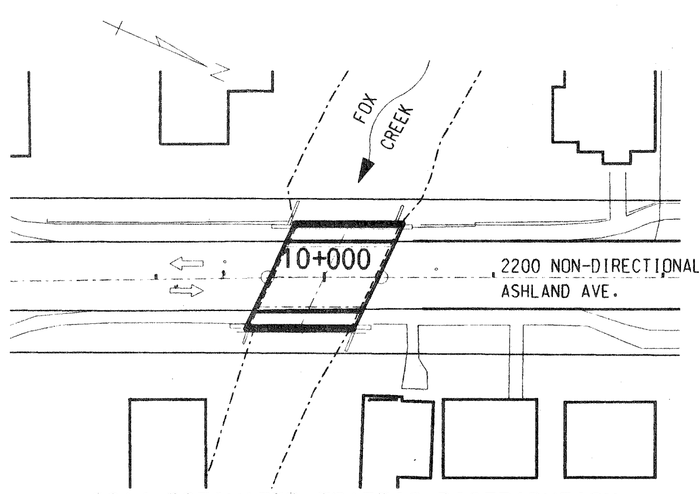

2014 ESTIMATED TRAFFIC DISTRIBUTION
000 AVERAGE DAILY TRAFFIC
⇨ DIRECTIONAL TRAFFIC

METRIC
DIMENSIONS ARE IN MILLIMETERS UNLESS OTHERWISE SHOWN. ELEVATIONS, COORDINATES, CURVE AND ALIGNMENT DATA ARE IN METERS. STATIONS ARE IN KILOMETERS + METERS.

NOTES:

CONTRACTOR IS ALERTED THAT AN ACTIVE WATERMAIN CURRENTLY EXISTS ON THE BRIDGE. IT IS CURRENTLY ATTACHED TO THE EAST FASCIA. THE WATERMAIN SHALL BE RELOCATED BY THE UTILITY COMPANY.

THE WORK COVERED BY THESE PLANS INCLUDES MAINTAINING TRAFFIC, REMOVAL OF EXISTING BRIDGE, CONSTRUCTION OF THE PROPOSED BRIDGE AND APPROACH WORK.

THE CONTRACTOR SHALL LOCATE ALL ACTIVE UNDERGROUND UTILITIES PRIOR TO STARTING WORK AND SHALL CONDUCT HIS OPERATIONS IN SUCH A MANNER AS TO ENSURE THAT THOSE UTILITIES NOT REQUIRING RELOCATION WILL NOT BE DISTURBED.

ASHLAND AVE. TRAFFIC IS TO BE DETOURED OVER EXISTING ROADS.

DATUM REFERS TO N.A.V.D. DATUM.

WATER LEVEL IS SUBJECT TO CHANGE. THE CONTRACTOR IS RESPONSIBLE FOR MAKING HIS OWN DETERMINATION OF WATER LEVELS THAT WILL EXIST DURING CONSTRUCTION.

MEASURES SHALL BE TAKEN TO PREVENT DEBRIS FROM FALLING FROM THE STRUCTURE. IF DEBRIS FALLS INTO THE WATERWAY, IT SHALL BE REMOVED WITHIN 24 HOURS. SINCE DISTURBANCE OF THE WATERWAY BOTTOM MAY BE AS HARMFUL AS THE DEBRIS ITSELF, THE PREVENTIVE MEASURES MUST BE MADE AS EFFECTIVE AS POSSIBLE. DEBRIS WHICH HAS PREVIOUSLY FALLEN FROM THE BRIDGE SHALL ALSO BE REMOVED AS DIRECTED BY THE ENGINEER.

TEMPORARILY STORED EXCAVATED MATERIAL SHALL NOT BE ALLOWED TO ERODE INTO THE WATERCOURSE.

ALL DISTURBED EXISTING GROUND AND ANY NEW FILL SLOPES SHALL BE SEEDED, FERTILIZED, AND MULCHED AS DIRECTED BY THE ENGINEER. TO BE INCLUDED IN THE PAY ITEMS "SEEDING, MIXTURE TUF," "FERTILIZER, CHEMICAL NUTRIENT, CLASS A," AND "MULCH BLANKET."

THE PAY ITEM "FLOW DIVERSION" SHALL INCLUDE DEWATERING, STEEL SHEET PILING, TEMPORARY, SANDBAGS AND FLOW DIVERSION PIPE.

REVISIONS				
	DSGN BY	M.A.M.	6-97	
	DR'N BY	R.J.D.	6-97	
	CK'D BY	R.G.W.	6-97	
	FINAL CK'D BY	M.D.W.	2-99	
	APP'D BY			

SEG
SNELL ENVIRONMENTAL GROUP, INC. A DLZ Company
151 W. CONGRESS, SUITE 328
DETROIT, MICHIGAN 48226
TELEPHONE (313) 961-4040

DETROIT Making it better for you

CITY OF DETROIT
MICHIGAN

ASHLAND AVE.
OVER THE FOX CREEK
(BW-245)

GENERAL
PLAN OF
SITE

SCALE	NOT TO SCALE
PROJECT NO.	9641-5160-03
SHEET NO.	A2 OF 22

FILE NAME: 02SITE03.DGN

h:\9641516O.03\bridge\finals\02sit Feb 2, 1999 14:57:06

TEST HOLE TB-#A-1

LOCATION STATION 10+013.344 1746 LT.
ASHLAND AVE. OVER THE FOX CREEK
GROUND SURFACE ELEVATION 176.740

ELEV.		
176.740		76 mm of ASPHALTIC CONCRETE over 114 mm of BRICK over 165 mm of P.C. CONCRETE
176.384		Driller reported P.C. CONCRETE to 762 mm depth
175.978		
175.368	3 3 3	FILL - Loose silty fine sand, trace gravel and clay, with occasional clay seams, dark brown, gray and black, moist (SM)
174.606	4 4 4	
174.302		
173.844	5 6 6	Stiff SILTY CLAY, with sand, trace gravel, mottled brown and gray (CL)
		ESTIMATED TOTAL SCOUR LIMIT ABUT. B ELEV. 173.700 +/-
173.082		Hard SILTY CLAY, some sand, trace gravel, brown (CL)
172.320	10 20 25	BOTT./FTG. ELEV. 172.473 ABUT. B
171.254		
170.796	5 9 10	Stiff SILTY CLAY, with sand, trace gravel, gray (CL)
169.272	5 6 9	
168.206		
167.748	40 40 41	Very dense SILTY FINE SAND, some gravel and clay, gray, wet (SM)
166.224	21 40 38	
165.615		Medium to stiff SILTY CLAY, some sand, trace gravel, with occasional sand seams, gray (CL)
164.700	6 6 7	
163.176	5 6 7	
163.024		Bottom of Boring - 13.716 m

NOTE:
WATER LEVEL AT COMPLETION: NONE

BORING DATE 4/ 3/97

TEST HOLE TB-#A-2

LOCATION STATION 9+988.641 2343 LT.
RIVERSIDE AVE. OVER FOX CREEK
GROUND SURFACE ELEVATION 177.032

ELEV.		
177.032		152 mm ASPHALTIC CONCRETE over 102 mm of BRICK over 127 mm of P.C. CONCRETE
176.651		Driller reported 76 mm of soil
176.575		Driller reported 305 mm of P. C. CONCRETE
176.270		
175.660	3 4 4	FILL - Loose to very loose clayey fine sand and silty clay, trace gravel, organics, and concrete pieces, dark brown to black, moist (SC)
174.898	2 2 2	
174.136	2 1 1	Very loose SILTY FINE SAND, trace clay, gravel and organics, gray, wet (SM)
		Medium SILTY CLAY, some sand, trace gravel, mottled brown and greenish gray (CL)
		ESTIMATED TOTAL SCOUR LIMIT ABUT. A ELEV. 173.500 +/-
172.612	2 2 6	
		BOTT./FTG. ELEV. 171.850 ABUT. A
171.850		
171.088	15 22 25	Hard SILTY CLAY, some sand, trace gravel, occasional sand partings, mottled brown and gray (CL)
170.326		
169.564	6 6 7	Medium to stiff SILTY CLAY, some sand, trace gravel, with frequent sand seams between 8.534 m and 9.144 m, gray (CL)
168.040	4 12 16	
167.888		Medium to soft SILTY CLAY, trace to some sand, trace gravel, gray (CL)
166.516	4 4 5	
164.992	5 5 6	
163.468	3 4 6	
161.944	3 3 3	
160.420	3 3 3	

CONTINUED

NOTE:
WATER LEVEL AT COMPLETION: NONE

BORING DATE 4/ 2/97

CONTINUED

ELEV.		
158.896	3 3 3	
157.372	3 4 4	
155.848	4 4 4	
154.324	4 4 5	
152.800	4 5 5	
151.734		
151.276	4 4 5	Very soft SILTY CLAY, trace sand and gravel, pinkish gray (CL)
150.514		
149.752	3 5 5	Soft to medium SILTY CLAY, trace sand and gravel, with occasional sand partings, gray (CL)
148.228	3 5 5	
146.704	4 4 7	
145.942		
145.180	20 25 25	Dense CLAYEY SILT, some sand, with frequent seams of silty clay, gray (ML)
144.418		
143.656	13 15 17	STIFF SILTY CLAY, some sand, trace gravel, with frequent silt seams, gray (CL/ML)
143.199		
		Hard SILTY SANDY CLAY, some gravel, gray (hardpan) (CL)
142.132	50 41 31/4"	Hard SILTY CLAY, some sand, trace gravel, gray (CL)
141.980	25-80-2	
141.736		Bottom of Boring - 35.296 m

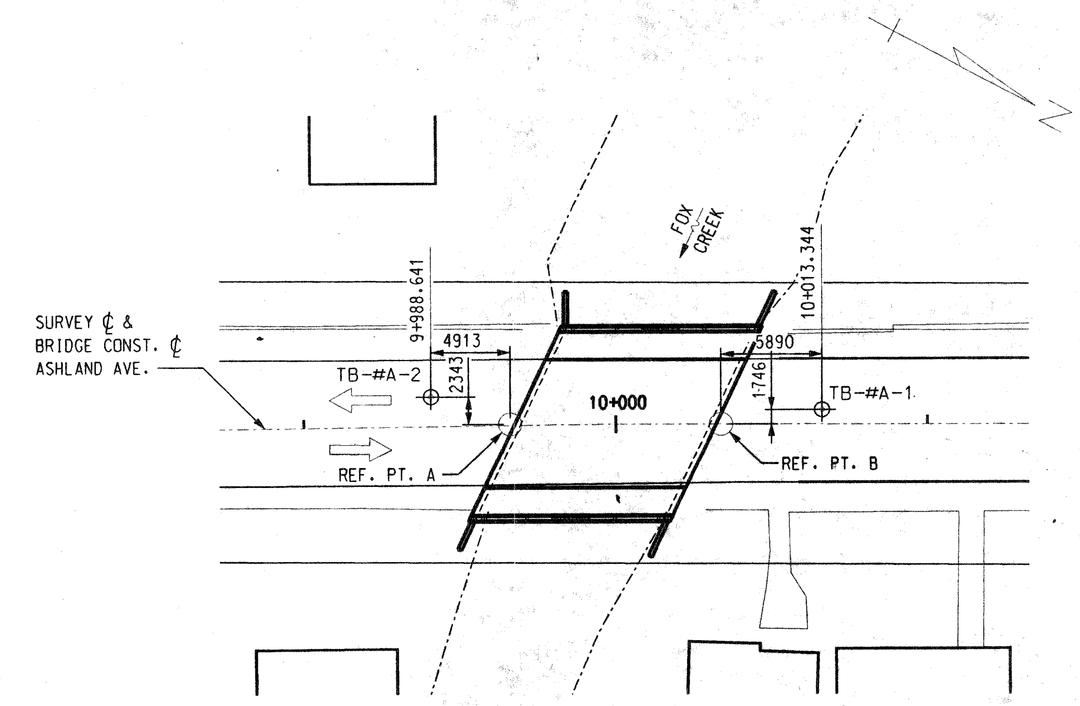

PLAN
SCALE: NTS

NOTES:

NUMBERS IN CIRCLES DENOTE NUMBER OF BLOWS REQUIRED TO DRIVE A 50.8 mm SPLIT SPOON SAMPLER 3 SUCCESSIVE 0.15 m INCREMENTS USING A 63.5 kg HAMMER FALLING 0.76 m. WHERE THE SAMPLER IS DRIVEN DISTANCES OTHER THAN THE 0.15 m INCREMENT, THE DISTANCE IS SHOWN IN PARENTHESIS TO THE RIGHT OF THE NUMBER OF BLOWS.

X / X / X — NUMBER OF BLOWS PER 0.15 m / NUMBER OF BLOWS PER 0.15 m / NUMBER OF BLOWS PER 0.15 m

X / X / XX(XX) — NUMBER OF BLOWS PER 0.15 m / NUMBER OF BLOWS PER 0.15 m / NUMBER OF BLOWS PER DISTANCE (mm)

XX(XX) — NUMBER OF BLOWS PER DISTANCE (mm)

CONSISTENCY WAS DETERMINED BY INSPECTION OF SAMPLES AND SUBSTANTIATED BY SOILS RESISTANCE TO DRILLING TOOLS.

WATER LEVELS MAY BE INFLUENCED BY RESIDUAL BORING WATER.

THE SOIL BORING LOGS REPRESENT POINT INFORMATION. PRESENTATION OF THIS INFORMATION IN NO WAY IMPLIES THAT SUBSURFACE CONDITIONS ARE THE SAME AT LOCATIONS OTHER THAN THE EXACT LOCATION OF THE BORING.

SOIL BORINGS WERE PERFORMED ON DATES SHOWN BELOW BORING.

BY: SOMAT ENGINEERING, INC.
26445 Northline Rd
Taylor, Michigan 48180
PHONE: (313) 946-4966

METRIC
DIMENSIONS ARE IN MILLIMETERS, UNLESS OTHERWISE SHOWN. ELEVATIONS, COORDINATES, CURVE AND ALIGNMENT DATA ARE IN METERS. STATIONS ARE IN KILOMETERS + METERS.

REVISIONS				
	DSGN BY	C.D.P.	6-97	
	DR'N BY	R.J.D.	6-97	
	CK'D BY	R.G.W.	6-97	
	FINAL CK'D BY	M.D.W.	2-99	
	APP'D BY			

SEG
SNELL ENVIRONMENTAL GROUP, INC. A DLZ Company
151 W. CONGRESS, SUITE 328
DETROIT, MICHIGAN 48226
TELEPHONE (313) 961-4040

DETROIT Making it better for you

CITY OF DETROIT
MICHIGAN

ASHLAND AVE.
OVER THE FOX CREEK
(BW-245)

LOG OF BORINGS

SCALE NOT TO SCALE
PROJECT NO. 9641-5160-03
SHEET NO. A3 OF 22

FILE NAME: 02BORING.DGN

13

h:\96415160.03\bridge\finals\03bor Feb. 2, 1999 15:43:12

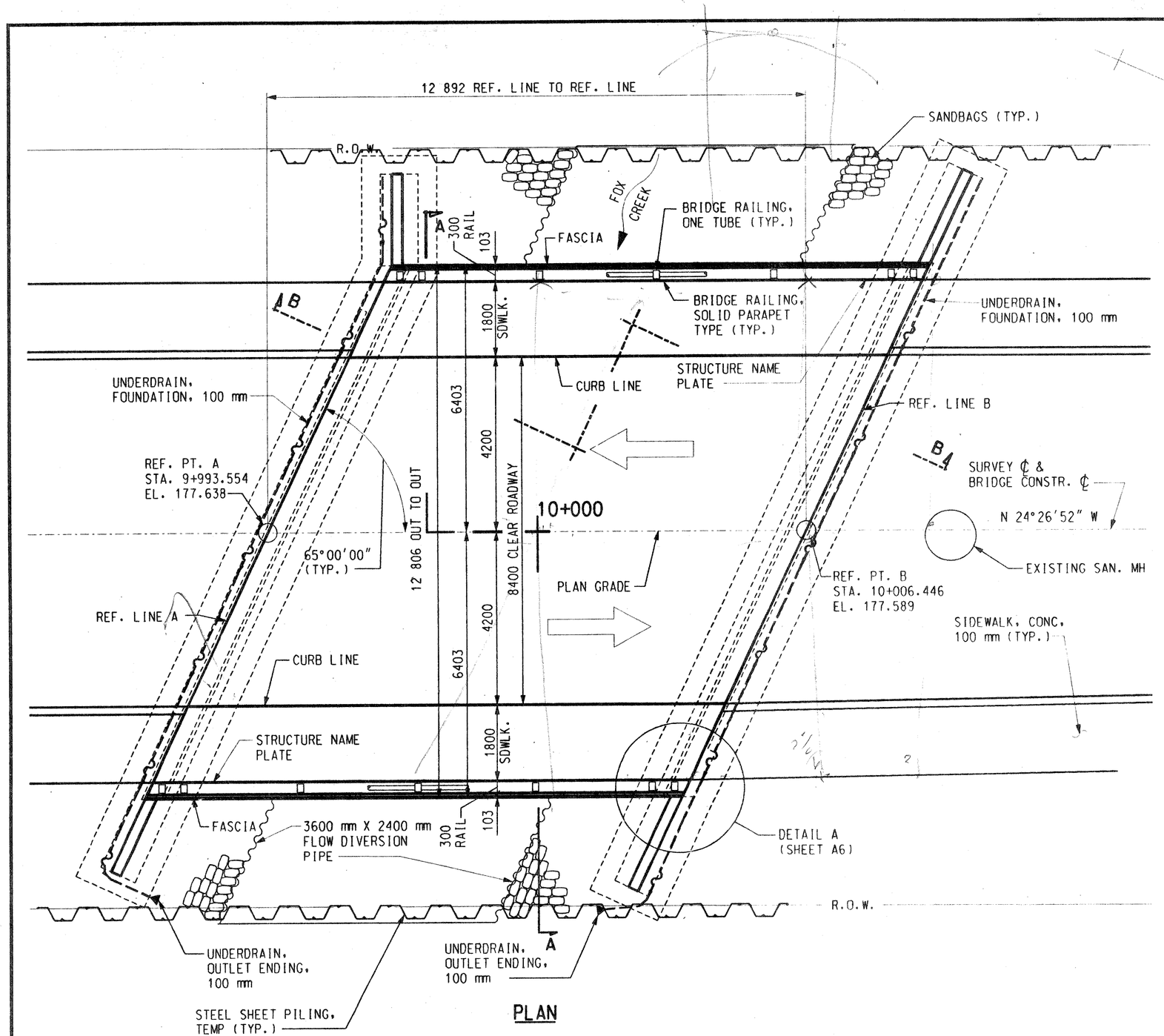

PLAN

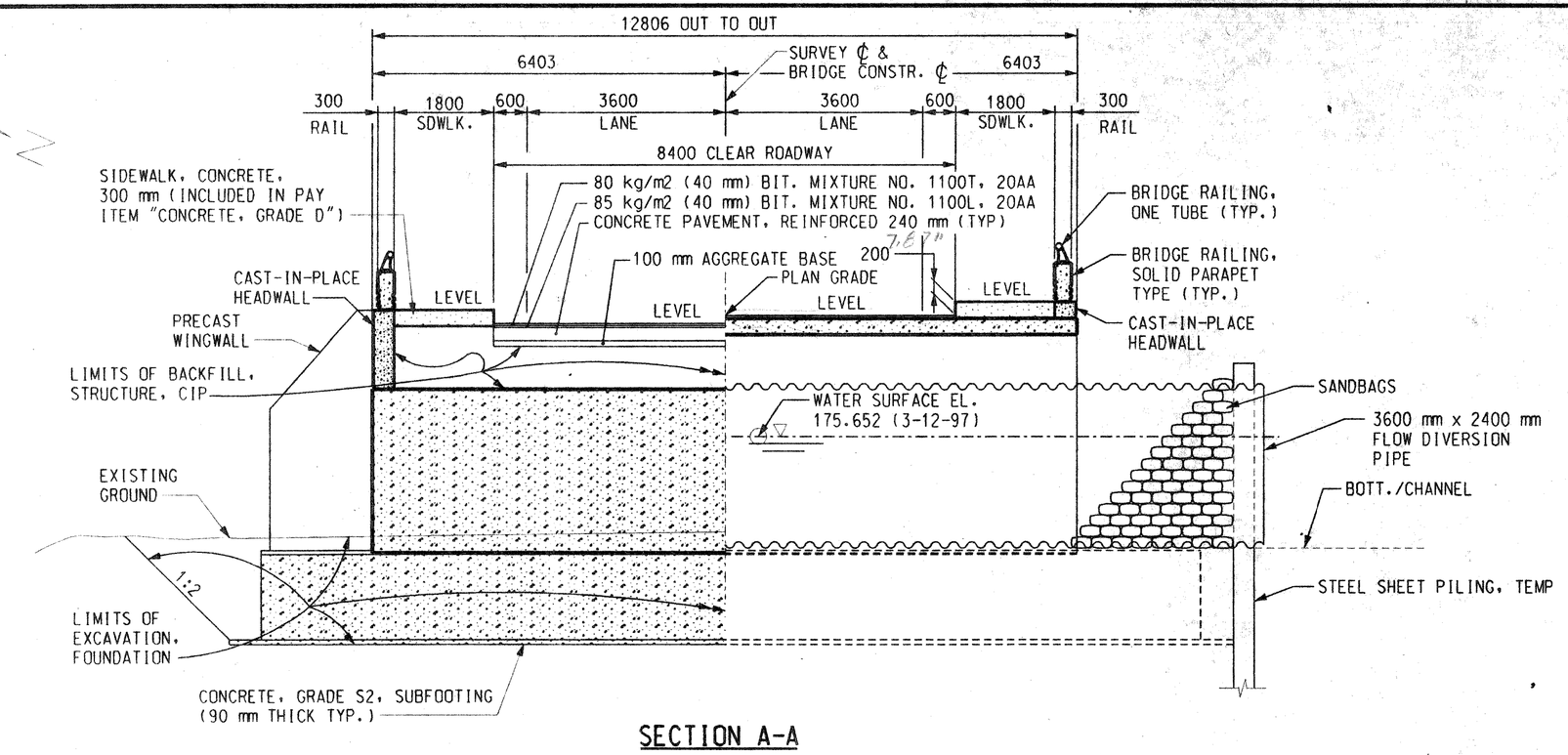

SECTION A-A

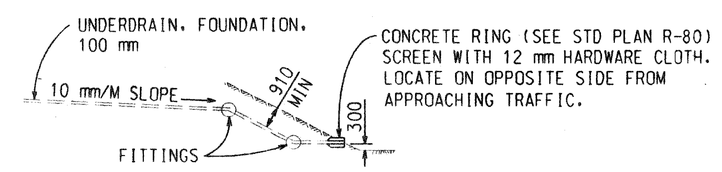

DETAIL FOR UNDERDRAIN DRAINAGE

NOTES:

THE DESIGN OF THIS STRUCTURE IS BASED ON CURRENT AASHTO STANDARD SPECIFICATIONS FOR HIGHWAY BRIDGES MS18 LOADING. LIVE LOAD PLUS IMPACT DEFLECTION DOES NOT EXCEED 1/1000 OF SPAN LENGTH.

THE TOP OF THE ROADWAY AND TOPS OF SIDEWALKS ARE PARALLEL TO THE VERTICAL CURVE.

STEEL SHEET PILING, TEMP., FLOW DIVERSION PIPE, SANDBAGS, AND DEWATERING SHALL BE INCLUDED IN THE PAY ITEM "FLOW DIVERSION".

FOOTINGS SHALL BE EMBEDDED IN "HARD SILTY CLAY" AS DIRECTED BY ENGINEER.

REMOVAL OF STRUCTURE INCLUDES ANY DEBRIS IN CHANNEL THAT WAS PREVIOUSLY PART OF THE STRUCTURE. THIS WILL ASLO INCLUDE ANY PILING THAT CONFLICTS WITH PROPOSED STRUCTURE.

IMMEDIATELY BACKFILL BEHIND STEEL SHEET PILING (TEMP. LEFT IN PLACE) TO AVOID CAVING OF EXISTING SOIL. SIDEWALK SLOPE SHOULD BE ADJUSTED TO PROVIDE A SMOOTH TRANSITION BETWEEN THE PROPOSED ROAD AND SIDEWALKS

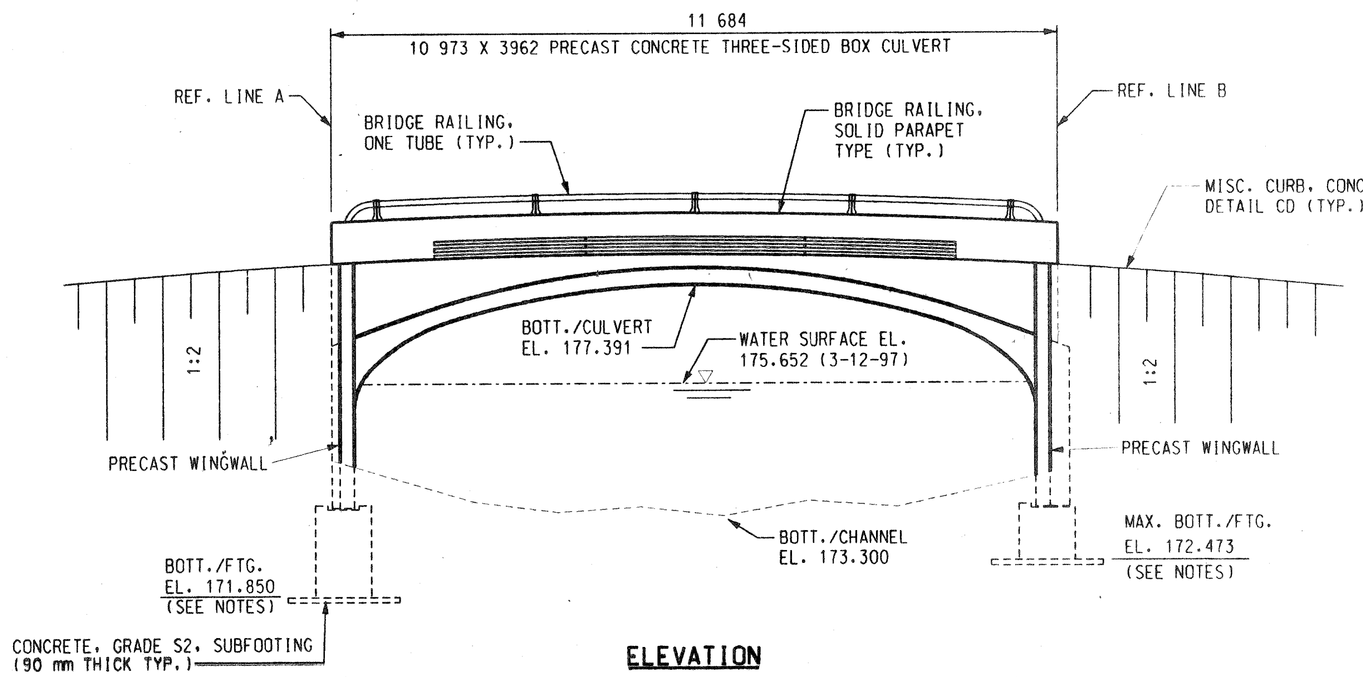

ELEVATION

(SHOWN NORMAL TO FOX CREEK)

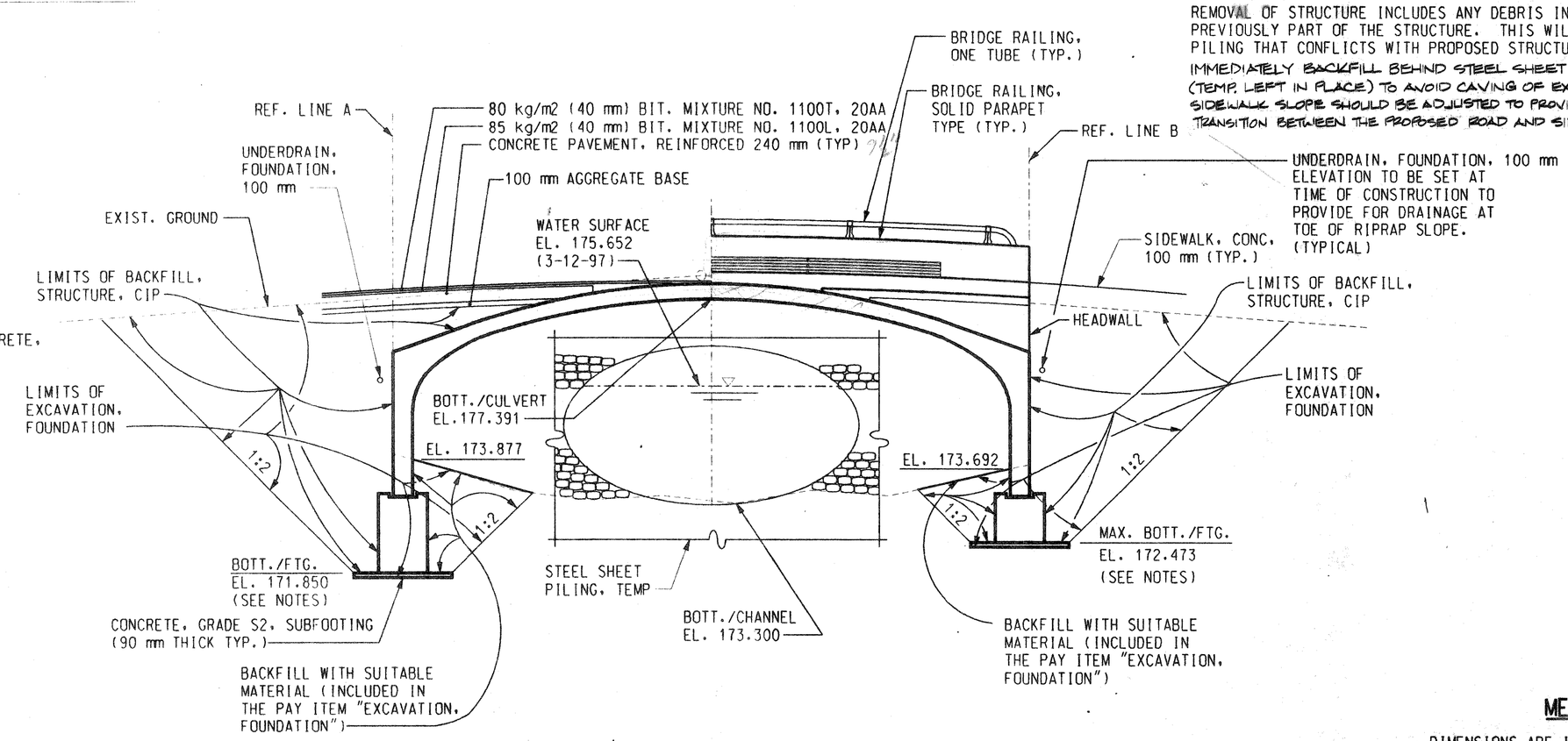

SECTION B-B

METRIC

DIMENSIONS ARE IN MILLIMETERS UNLESS OTHERWISE SHOWN. ELEVATIONS, COORDINATES, CURVE AND ALIGNMENT DATA ARE IN METERS. STATIONS ARE IN KILOMETERS + METERS.

REVISIONS				
	DSGN BY	M.A.M.	6-97	
	DR'N BY	R.J.D.	6-97	
	CK'D BY	R.G.W.	6-97	
	FINAL CK'D BY	M.D.W.	2-99	
	APP'D BY			

SEG

SNELL ENVIRONMENTAL GROUP, INC. A DLZ Company
151 W. CONGRESS, SUITE 328
DETROIT, MICHIGAN 48226
TELEPHONE (313) 961-4040

DETROIT — Making it better for you

CITY OF DETROIT
MICHIGAN

ASHLAND AVE.
OVER THE FOX CREEK
(BW-245)

GENERAL PLAN OF STRUCTURE

SCALE	NOT TO SCALE
PROJECT NO.	9641-5160-03
SHEET NO.	A4 OF 22

FILE NAME: 04GPSTR3.DGN

h:\96415160.03\bridge\finals\04gps Feb. 2, 1999 15:44:48

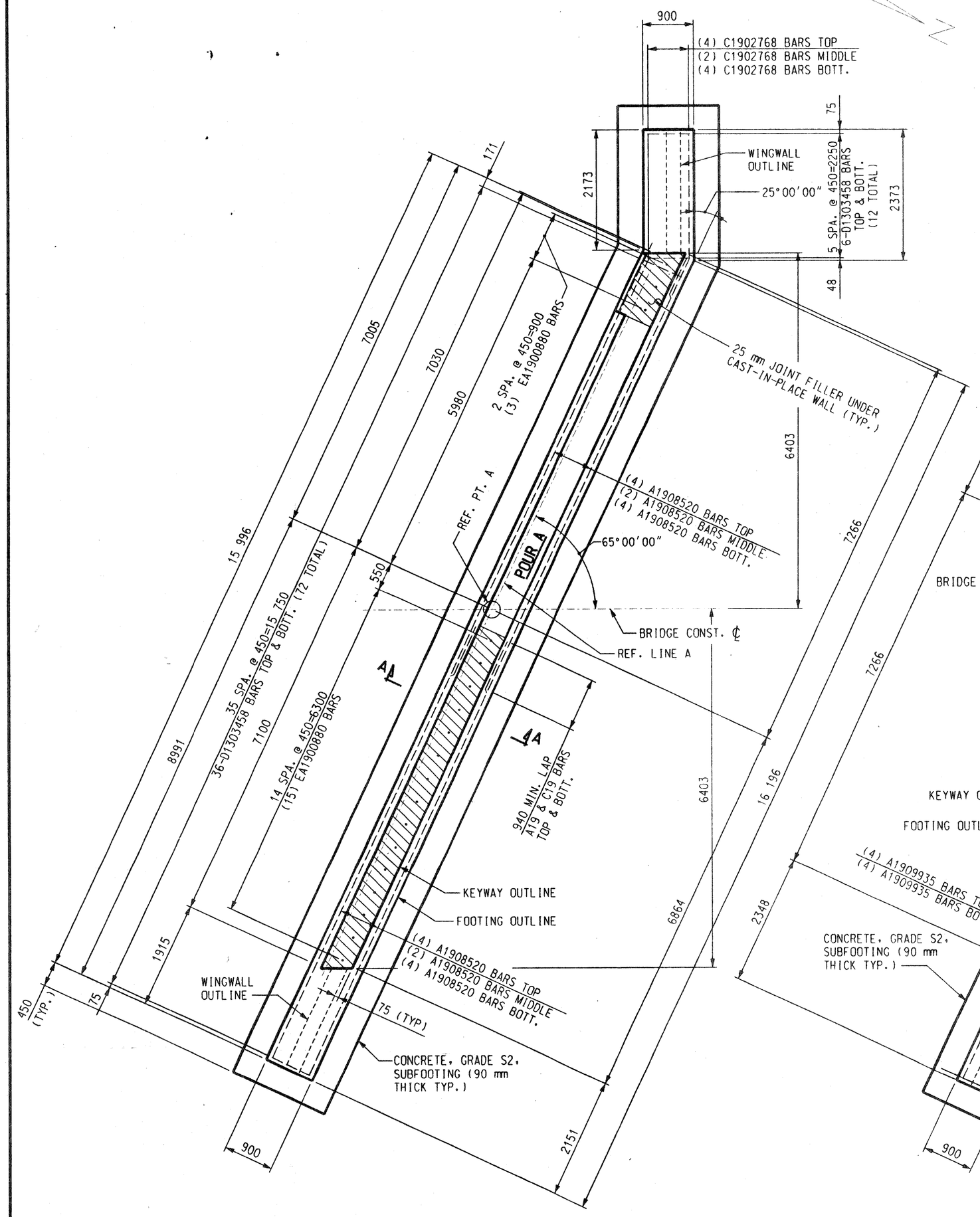

PLAN OF FOOTING
(ABUTMENT A)

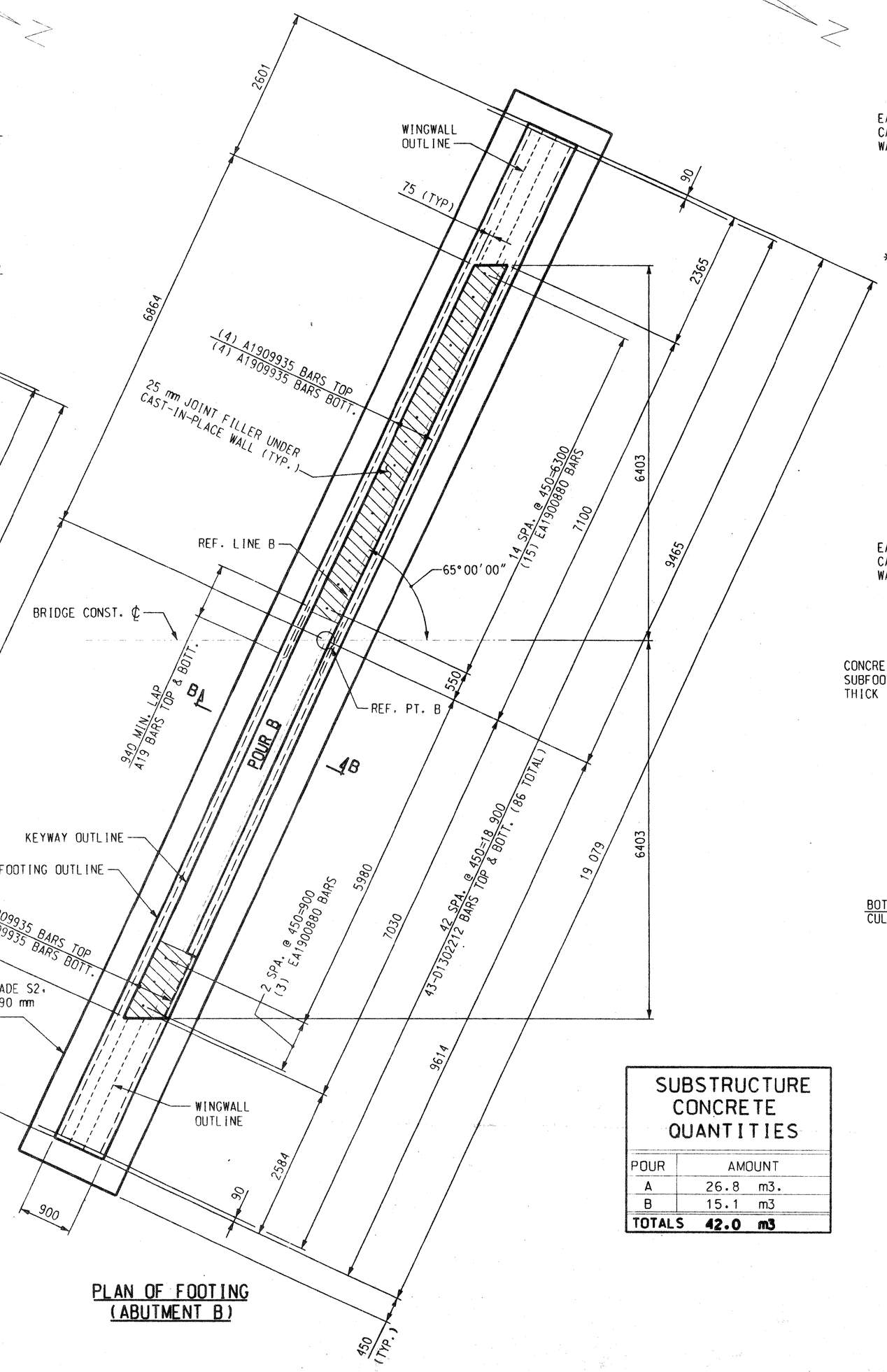

PLAN OF FOOTING
(ABUTMENT B)

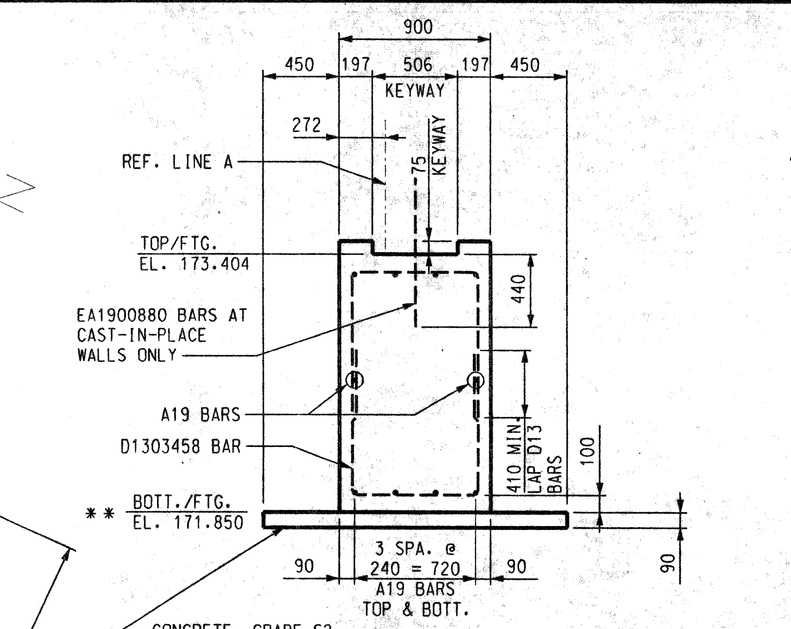

SECTION A-A

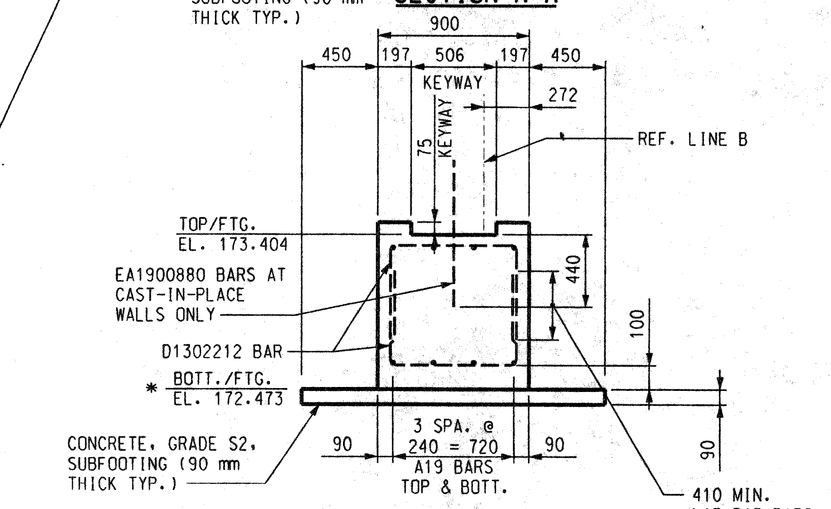

SECTION B-B

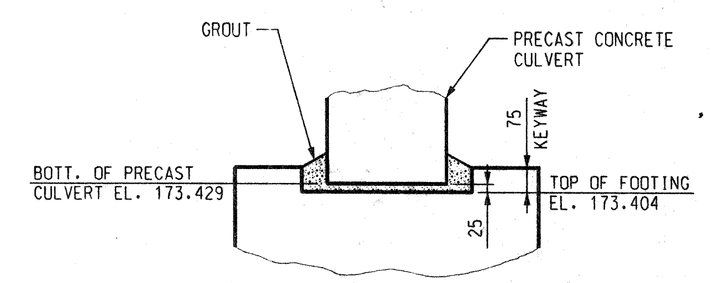

DETAIL AT KEYWAY

SUBSTRUCTURE CONCRETE QUANTITIES	
POUR	AMOUNT
A	26.8 m3.
B	15.1 m3
TOTALS	**42.0 m3**

NOTES:

FOR ABUTMENTS A AND B THE MAXIMUM FOUNDATION PRESSURE IS CALCULATED TO BE 304 kPa AVERAGE DEAD LOAD PLUS LIVE LOAD PRESSURE.

* ABUTMENT B BOTTOM OF FOOTING ELEVATION 172.473 IS A MAXIMUM. BOTTOM OF FOOTING MAY BE LOWERED AS DIRECTED BY THE ENGINEER TO ENSURE THAT THE FOOTING IS EMBEDDED IN "HARD SILITY CLAY".

** ABUTMENT A BOTTOM OF FOOTING MAY BE ADJUSTED AS DIRECTED BY THE ENGINEER TO ENSURE THAT THE FOOTING IS EMBEDDED IN "HARD SILTY CLAY". BOTTOM OF FOOTING MAY NOT EXCEED ELEVATION 172.217.

METRIC

DIMENSIONS ARE IN MILLIMETERS UNLESS OTHERWISE SHOWN. ELEVATIONS, COORDINATES, CURVE AND ALIGNMENT DATA ARE IN METERS. STATIONS ARE IN KILOMETERS + METERS.

REVISIONS			
DSGN BY	C.D.P.	6-97
DR'N BY	R.J.D.	6-97
CK'D BY	R.G.W.	6-97
FINAL CK'D BY	M.D.W.	2-99
APP'D BY		

SEG

SNELL ENVIRONMENTAL GROUP, INC. A DLZ Company
151 W. CONGRESS, SUITE 328
DETROIT, MICHIGAN 48226
TELEPHONE (313) 961-4040

DETROIT Making it better for you

CITY OF DETROIT
MICHIGAN

ASHLAND AVE.
OVER THE FOX CREEK
(BW-245)

FOOTING DETAILS

SCALE NOT TO SCALE
PROJECT NO. 9641-5160-03
SHEET NO. A5 OF 22

FILE NAME: D5FTG03 .DGN

h:\9641516\0.03\bridge\finals\05ftg Feb. 2, 1999 15:56:12

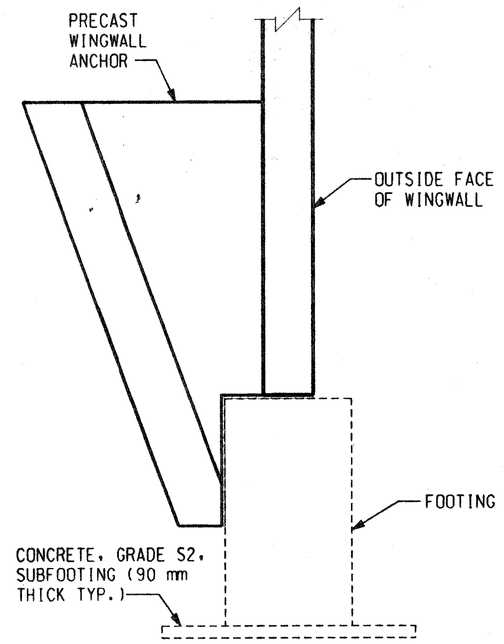

TYPICAL SECTION THRU PRECAST WINGWALL

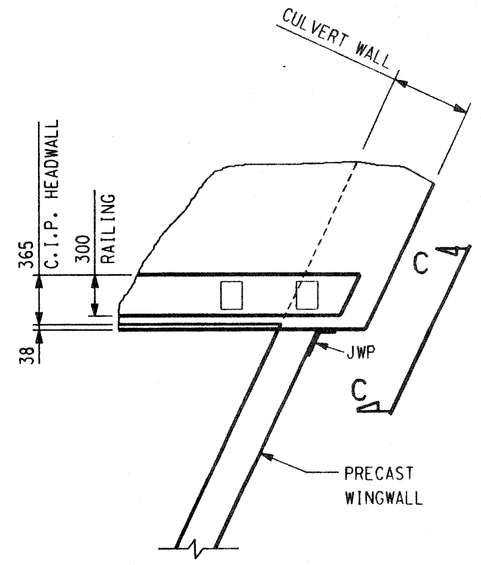

DETAIL A

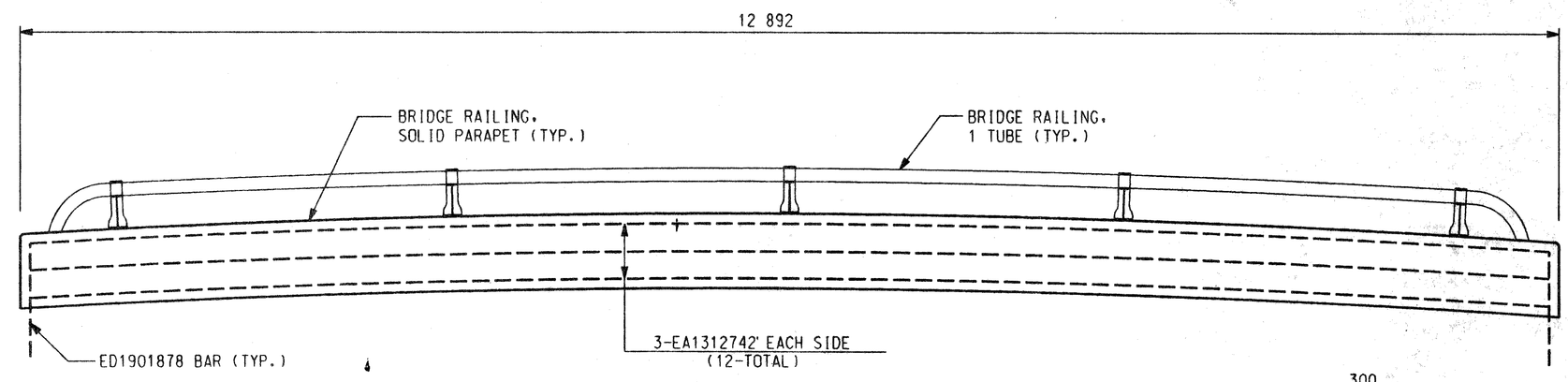

BRIDGE RAILING ELEVATION

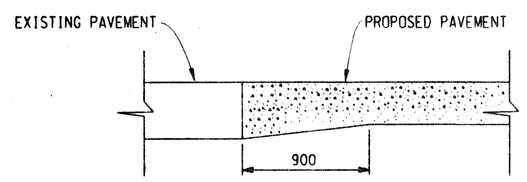

PROVIDE THIS THICKENED EDGE WHERE PROPOSED PAVEMENT MEETS EXIST. PAVEMENT

DETAIL OF THICKENED EDGE

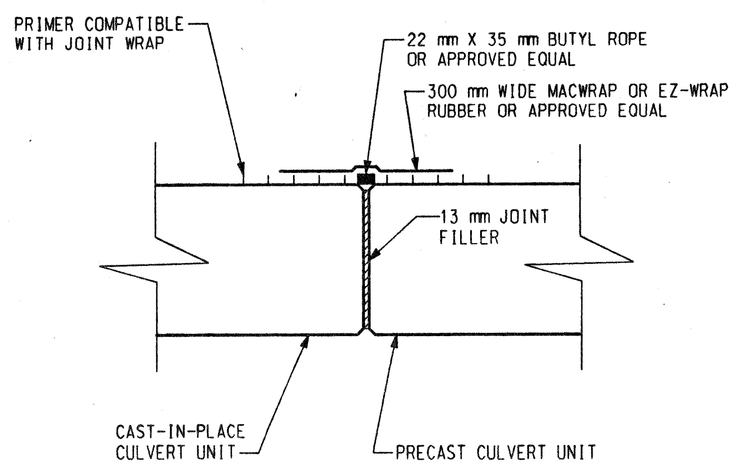

STANDARD CAST-IN-PLACE/PRECAST JOINT DETAIL

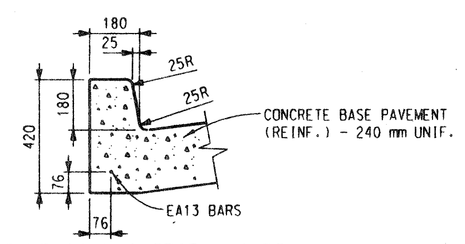

TYPE IIIR INTEGRAL CURB

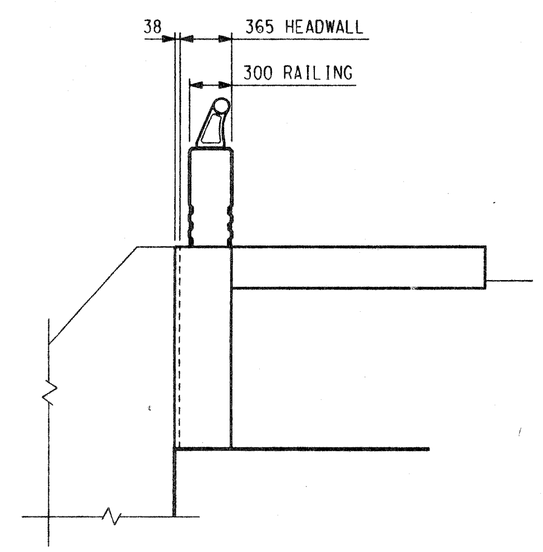

SECTION C-C

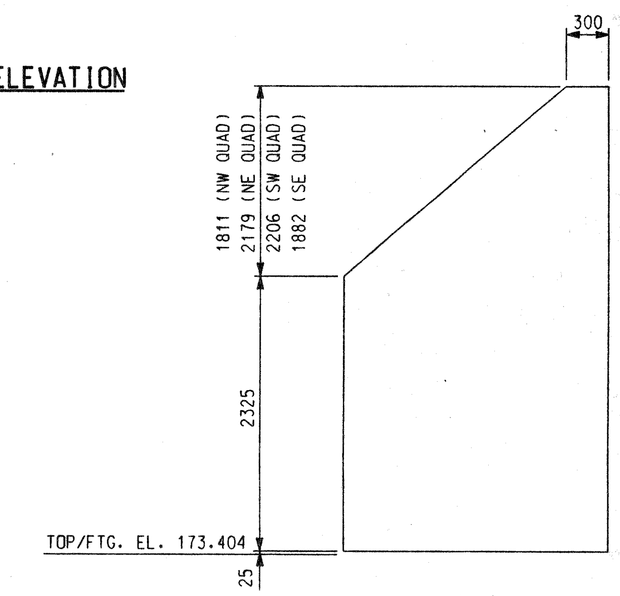

WINGWALL ELEVATION

(SHOWN PARALLEL TO WALL)

LENGTH OF WINGWALL SHALL BE DERIVED FROM PLAN OF FOOTING SHEET 5)

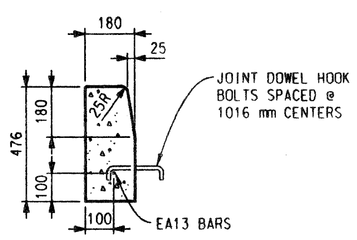

TYPE IIR CONCRETE CURB

(OPTIONAL)

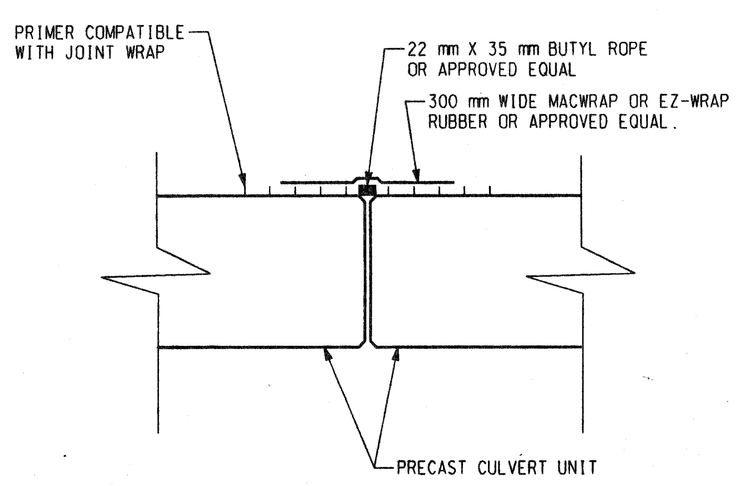

STANDARD PRECAST JOINT DETAIL

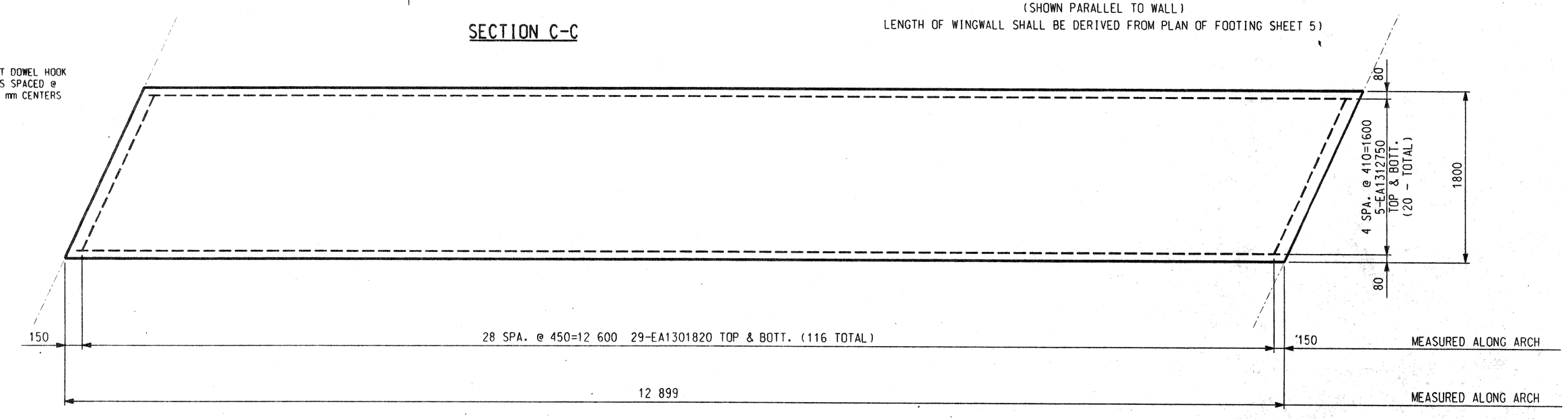

TYPICAL PLAN OF SIDEWALK

METRIC

DIMENSIONS ARE IN MILLIMETERS UNLESS OTHERWISE SHOWN. ELEVATIONS, COORDINATES, CURVE AND ALIGNMENT DATA ARE IN METERS. STATIONS ARE IN KILOMETERS + METERS.

REVISIONS			
	DSGN BY	C.D.P.	6-97
	DR'N BY	R.J.D.	6-97
	CK'D BY	R.G.W.	6-97
	FINAL CK'D BY	M.D.W.	2-99
	APP'D BY		

SEG

SNELL ENVIRONMENTAL GROUP, INC. A DLZ Company
151 W. CONGRESS, SUITE 328
DETROIT, MICHIGAN 48226
TELEPHONE (313) 961-4040

DETROIT — Making it better for you

CITY OF DETROIT
MICHIGAN

ASHLAND AVE.
OVER THE FOX CREEK
(BW-245)

MISCELLANEOUS DETAILS

SCALE NOT TO SCALE
PROJECT NO. 9641-5160-01
SHEET NO. A6 OF 22

FILE NAME: 06DET03.DGN

16

h:\96415160.03\bridge\finals\06det Feb. 2, 1999 15:57:29

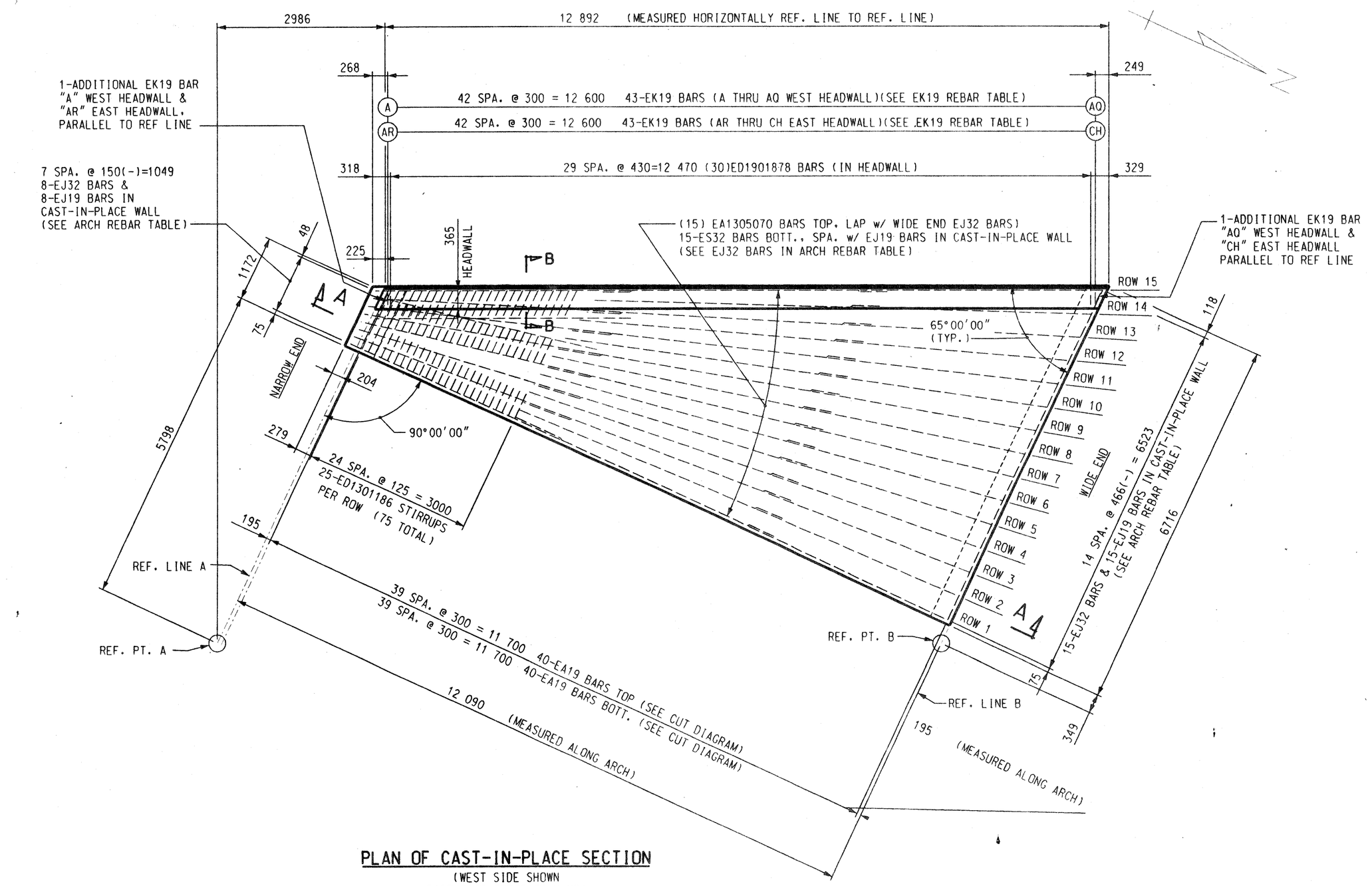

PLAN OF CAST-IN-PLACE SECTION

(WEST SIDE SHOWN
EAST SIDE OPPOSITE HAND)

EK19 REBAR TABLE

WEST CULVERT SECTION		EAST CULVERT SECTION	
A	EK1904143	AR	EK1904089
B	EK1903943	AS	EK1903895
C	EK1903741	AT	EK1903697
D	EK1903539	AU	EK1903499
E	EK1903335	AV	EK1903299
F	EK1903129	AW	EK1903099
G	EK1902931	AX	EK1902907
H	EK1902749	AY	EK1902727
I	EK1902577	AZ	EK1902561
J	EK1902419	BA	EK1902405
K	EK1902271	BB	EK1902263
L	EK1902137	BC	EK1902133
M	EK1902013	BD	EK1902113
N	EK1901901	BE	EK1901905
O	EK1901799	BF	EK1901809
P	EK1901709	BG	EK1901723
Q	EK1901629	BH	EK1901647
R	EK1901559	BI	EK1901583
S	EK1901501	BJ	EK1901529
T	EK1901453	BK	EK1901485
U	EK1901417	BL	EK1901453
V	EK1901389	BM	EK1901431
W	EK1901373	BN	EK1901419
X	EK1901367	BO	EK1901417
Y	EK1901373	BP	EK1901427
Z	EK1901387	BQ	EK1901445
AA	EK1901413	BR	EK1901477
AB	EK1901449	BS	EK1901517
AC	EK1901497	BT	EK1901569
AD	EK1901555	BU	EK1901631
AE	EK1901623	BV	EK1901705
AF	EK1901705	BW	EK1901789
AG	EK1901795	BX	EK1901885
AH	EK1901899	BY	EK1901993
AI	EK1902013	BZ	EK1902113
AJ	EK1902141	CA	EK1902243
AK	EK1902279	CB	EK1902387
AL	EK1902431	CC	EK1902543
AM	EK1902597	CD	EK1902713
AN	EK1902765	CE	EK1902887
AO	EK1902933	CF	EK1903059
AP	EK1903101	CG	EK1903231
AQ	EK1903265	CH	EK1903399

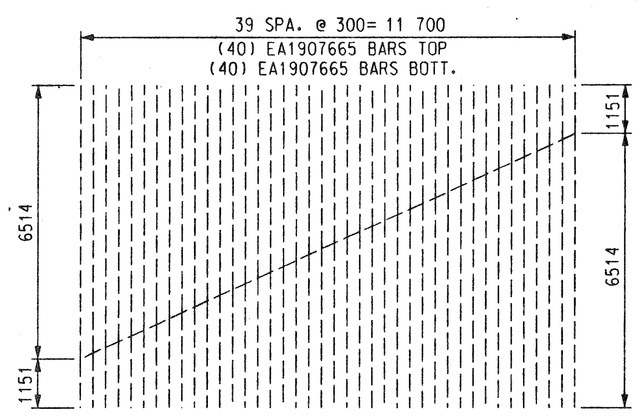

CUT DIAGRAM

ARCH REBAR TABLE

	ES32 BARS	EJ19 BARS	EJ32 BARS	
			NARROW END	WIDE END
ROW 1	ES3211885	EJ1904097	EJ3207027	EJ3206888
ROW 2	ES3209292	EJ1904098	-	EJ3206891
ROW 3	ES3211910	EJ1904101	EJ3207036	EJ3206897
ROW 4	ES3209343	EJ1904103	-	EJ3206907
ROW 5	ES3211985	EJ1904108	EJ3207062	EJ3206921
ROW 6	ES3209445	EJ1904116	-	EJ3206940
ROW 7	ES3212108	EJ1904124	EJ3207105	EJ3206963
ROW 8	ES3209595	EJ1904133	-	EJ3206989
ROW 9	ES3212280	EJ1904144	EJ3207166	EJ3207019
ROW 10	ES3209795	EJ1904156	-	EJ3207054
ROW 11	ES3212499	EJ1904170	EJ3207241	EJ3207091
ROW 12	ES3210037	EJ1904184	-	EJ3207133
ROW 13	ES3212758	EJ1904199	EJ3207331	EJ3207177
ROW 14	ES3210323	EJ1904216	-	EJ3207225
ROW 15	ES3213059	EJ1904235	EJ3207433	EJ3207277

METRIC

DIMENSIONS ARE IN MILLIMETERS UNLESS OTHERWISE SHOWN. ELEVATIONS, COORDINATES, CURVE AND ALIGNMENT DATA ARE IN METERS. STATIONS ARE IN KILOMETERS + METERS.

REVISIONS			
DSGN BY	C.D.P.	6-97
DR'N BY	R.J.D.	6-97
CK'D BY	R.G.W.	6-97
FINAL CK'D BY	M.D.W.	2-99
APP'D BY		

SEG

SNELL ENVIRONMENTAL GROUP, INC. A DLZ Company
151 W. CONGRESS, SUITE 328
DETROIT, MICHIGAN 48226
TELEPHONE (313) 961-4040

DETROIT Making it better for you

CITY OF DETROIT
MICHIGAN

ASHLAND AVE.
OVER THE FOX CREEK
(BW-245)

SUPERSTRUCTURE DETAILS

SCALE NOT TO SCALE
PROJECT NO. 9641-5160-03
SHEET NO. A7 OF 22

FILE NAME: 05SPR03.DGN

17

h:\96415160.03\bridge\finals\07spr Feb. 2, 1999 16:01:20

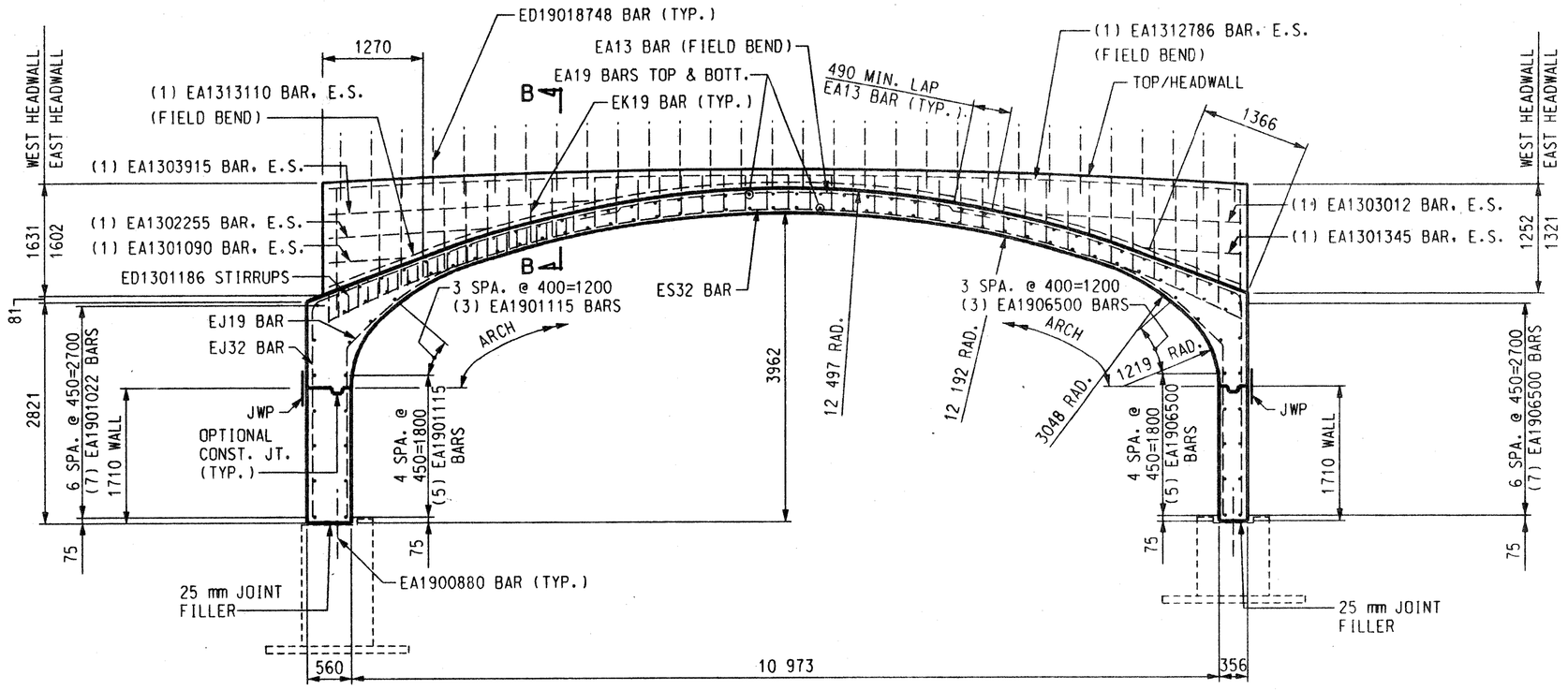

SECTION A-A

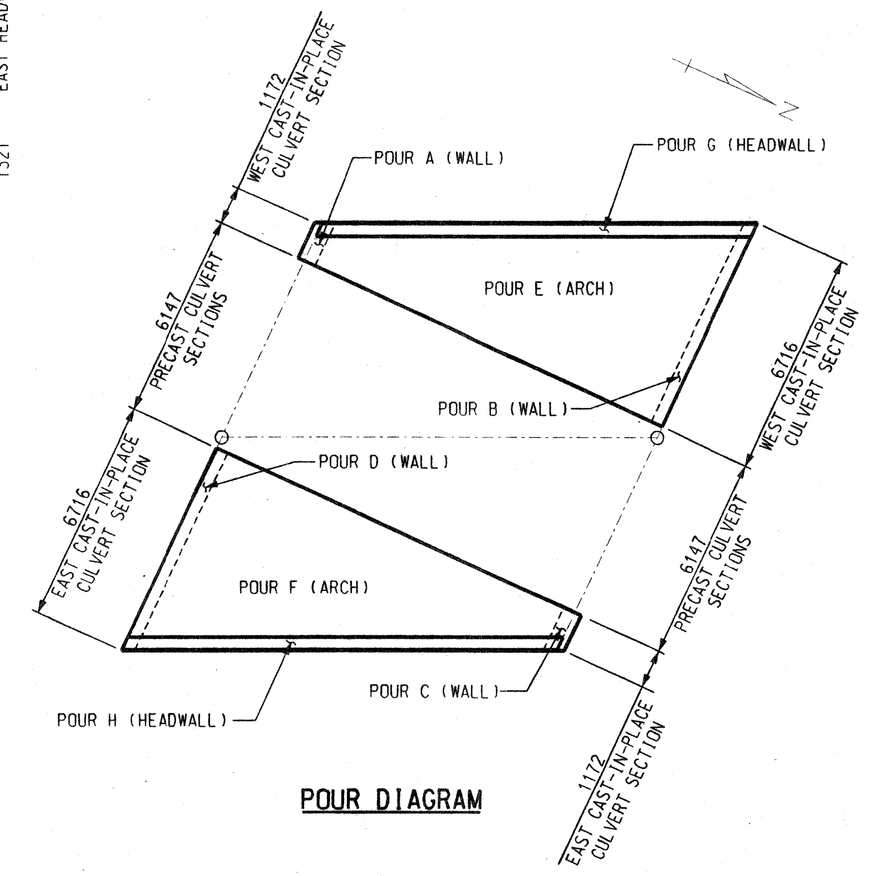

POUR DIAGRAM

SUPERSTRUCTURE CONCRETE QUANTITIES	
POUR	AMOUNT
A	1.5 m3
B	4.1 m3
C	1.5 m3
D	4.1 m3
E	16.4 m3
F	16.4 m3
G	4.9 m3
H	4.9 m3
TOTALS	54.0 m3

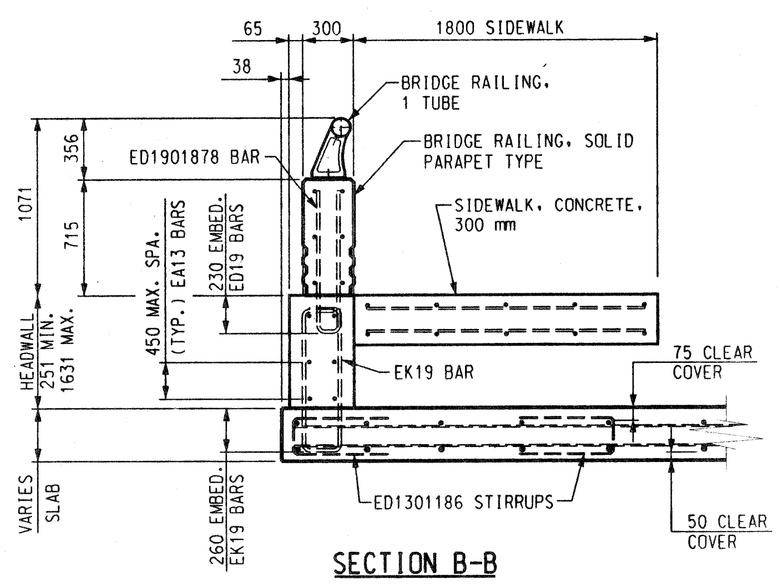

SECTION B-B

NOTES:

FOR NAME PLATE MOUNTING, MOLDING AND BEVEL DETAILS, SEE STANDARD B-103-B. FOR BRIDGE RAILING, SOLID PARAPET TYPE, SEE STANDARD B-18-B. FOR BRIDGE RAILING ONE TUBE, SEE STANDARD B-24-A.

FOR NAME PLATE LOCATION, SEE SHEET 4.

A RUBBED SURFACE FINISH ON THE VERTICAL AND TOP CONCRETE SURFACES OF THE PARAPET RAILING IS REQUIRED ON THIS STRUCTURE.

DUE TO THE "HINGED" CONNECTION BETWEEN THE CAST-IN-PLACE WALL AND THE FOOTING, THE CAST-IN-PLACE WALL SHALL BE SUPPORTED FROM BOTH FACES DURING ITS CONSTRUCTION AND DURING THE CONSTRUCTION OF THE "ARCH".

BACKFILLING SHALL NOT BE PERMITTED PRIOR TO BOTH OF THE CAST-IN-PLACE "ARCHES" AND HEADWALLS ATTAINING THEIR RESPECTIVE MINIMUM 28 DAY COMPRESSIVE STRENGTHS.

CAST-IN-PLACE CULVERT SECTIONS SHALL BE CONNECTED TO THE ADJACENT PRECAST CULVERT SECTIONS IN A MANNER THAT IS SIMILAR TO THE CONNECTION BETWEEN TWO ADJACENT PRECAST CULVERT SECTIONS. THE CONTRACTOR SHALL SUPPLY DETAILS OF SAID CONNECTION TO THE ENGINEER FOR APPROVAL.

TOP OF HEADWALL IS PARALLEL TO THE VERTICAL CURVE.

METRIC

DIMENSIONS ARE IN MILLIMETERS UNLESS OTHERWISE SHOWN. ELEVATIONS, COORDINATES, CURVE AND ALIGNMENT DATA ARE IN METERS. STATIONS ARE IN KILOMETERS + METERS.

REVISIONS			
DSGN BY	C.D.P.	6-97	
DR'N BY	R.J.D.	6-97	
CK'D BY	R.G.W.	6-97	
FINAL CK'D BY	M.D.W.	2-99	
APP'D BY			

SNELL ENVIRONMENTAL GROUP, INC. A DLZ Company
151 W. CONGRESS, SUITE 328
DETROIT, MICHIGAN 48226
TELEPHONE (313) 961-4040

DETROIT Making it better for you

CITY OF DETROIT
MICHIGAN

ASHLAND AVE.
OVER THE FOX CREEK
(BW-245)

SUPERSTRUCTURE DETAILS

SCALE NOT TO SCALE
PROJECT NO. 9641-5160-03
SHEET NO. A8 OF 22

FILE NAME: OSSPR03 .DGN

h:\96415160.03\bridge\finals\08spr Feb. 2, 1999 16:02:49

SPECIFICATIONS FOR MANUFACTURE AND INSTALLATION OF PRECAST CULVERT BRIDGE SYSTEMS

1. DESCRIPTION

This work shall consist of constructing a Con/Span culvert or approved equal in accordance with these specifications and in reasonably close conformity with the lines, grades, design and dimensions shown on the plans or as established by the Engineer.

2. TYPES

Precast reinforced concrete Con/Span culverts or approved equal manufactured in accordance with this specification shall be designated by span and rise.

3. MATERIALS - CONCRETE

The concrete for the culverts shall be air-entrained when installed in areas subject to freeze-thaw conditions, composed of portland cement, fine and course aggregates, admixtures and water. Concrete shall contain 6 ± 2 percent air. The air entraining admixture shall conform to AASHTO M154.

3.1. Cement - Portland cement shall conform to the requirements of ASTM Specifications C150-Type I, Type II, or Type III cement.

3.2 Course Aggregate - Shall consist of stone having a maximum size of 25 mm Aggregate shall meet requirements for ASTM C33.

3.3 Water Reducing Admixture - The manufacturer may submit for approval by the Engineer, water-reducing admixture for the purpose of increasing workability and reducing the water requirement for the concrete.

3.4 Calcium Chloride - The addition to the mix of calcium chloride or admixtures containing calcium chloride will not be permitted.

4. MATERIALS - STEEL REINFORCEMENT AND HARDWARE

All reinforcing steel for the culverts shall be fabricated and placed in accordance with the detailed shop drawings submitted by the manufacturer.

4.1 Steel Reinforcement - Reinforcement shall consist of welded wire fabric conforming to ASTM Specification A 185 or A 497, or deformed billet steel bars conforming to ASTM Specification A 615, Grade 400. Longitudinal distribution reinforcement may consist of welded wire fabric or deformed billet-steel bars.

5. MANUFACTURE

5.1 Mixture - The aggregates, cement and water shall be proportioned and mixed in a batch mixer to produce a homogeneous concrete meeting the strength requirements of this specification. The proportion of portland cement in the mixture shall not be less than 256 kg (5 sacks) per cubic meter of concrete.

5.2 Curing - The precast concrete culvert units shall be cured for a sufficient length of time so that the concrete will develop the specified compressive strength in 28 days or less. Any one of the following methods of curing or combinations thereof shall be used:

5.2.1 Steam Curing - The culverts may be low pressure, steam cured by a system that will maintain a moist atmosphere.

5.2.2 Water Curing - The culverts may be water cured by any method that will keep the sections moist.

5.2.3 Membrane Curing - A sealing membrane conforming to the requirements ASTM Specification C 309 may be applied and shall be left intact until the required concrete compressive strength is attained. The Concrete temperature at the time of application shall be within ± 6 degree C of the atmospheric temperature. All surfaces shall be kept moist prior to the application of the compounds and shall be damp when the compound is applied.

5.3 Forms - the forms used in manufacture shall be sufficiently rigid and accurate to maintain the culvert dimensions within the permissible variations given in Section 7. All casting surfaces shall be of smooth material.

5.4 Handling - Handling devices or holes shall be permitted in each culvert for the purpose of handling and setting.

5.5 Storage - The culverts shall be stored in such a manner to prevent cracking or damage. The units shall not be stored in an upright position until the compressive strength is a minimum of 28 MPa.

6. DESIGN

6.1 The culvert dimension and reinforcement details shall be as prescribed in the plan and the shop drawings provided by the manufacturer subject to the provisions of Section 7. The minimum concrete compressive strength shall be 28 MPa. The minimum steel yield strength shall be 400 MPa.

The culverts are designed in accordance with the "Standard Specifications for Highway Bridges" adopted by the American Association of State Highway and Transportation Officials, 1996 ; and the Alternate Military Loading. A minimum of 300 mm of cover above the crown of the culvert is required in the installed condition. (Unless noted otherwise and designed accordingly.)

6.2 Placement of Reinforcement - The cover of concrete over the outside circumferential reinforcement shall be 50 mm minimum. The cover of concrete over the inside circumferential reinforcement shall be 40 mm minimum. The clear distance of the end circumferential wires shall not be less than 25 mm nor more than 50 mm from the ends of the culvert. Reinforcement shall be assembled utilizing single or multiple layers of welded wire fabric, or utilizing a single layer of deformed billet-steel bars. The welded wire fabric shall be composed of circumferential and longitudinal wires meeting the spacing requirements of 6.4 and shall contain sufficient longitudinal wires extending through the culvert to maintain the shape and position of reinforcement. Longitudinal distribution reinforcement may be welded wire fabric or deformed billet-steel bars and shall meet the spacing requirements of 6.4. The ends of the longitudinal distribution reinforcement shall be not more than 75 mm from the ends of the culvert.

6.3 Bending of Reinforcement - the outside and inside circumferential reinforcing steel for the corners of the culvert shall be bent to such an angle that is approximately equal to the configuration of the culvert's outside corner.

6.4 Laps, Welds, and Spacing - Tension splices in the circumferential reinforcement shall be made by lapping. Laps may be tack welded together for assembly purposes. For smooth welded wire fabric, the overlap shall meet the requirements of ACI 12.8 and 12.19. For deformed welded wire fabric, the overlap shall meet the requirements of ACI 12.7 and 12.18. For deformed billet-steel bars, the overlap shall meet the requirements of ACI 12.2. For splices other than tension splices, the overlap shall be a minimum of 300 mm for welded wire fabric or deformed billet-steel bars. The spacing center to center of the circumferential wires in a wire fabric sheet shall be not less than 50 mm nor more than 100 mm. For the wire fabric, the spacing center to center of the longitudinal wires shall not be more than 200 mm. The spacing center to center of the longitudinal distribution steel for either line of reinforcing in the top slab shall be not more than 400 mm.

7. PERMISSIBLE VARIATIONS

7.1 Internal Dimensions - The internal dimension shall vary not more than 1% from the design dimensions nor more than 40 mm whichever is less. The haunch dimensions shall vary not more than 20 mm from the design dimension.

7.2 Slab and Wall Thickness - The slab and wall thickness shall not be less than that shown in the design by more than 6 mm. A thickness more than that required in the design shall not be cause for rejection.

7.3 Length of Opposite Surfaces - Variations in laying lengths of two opposite surfaces of the culvert shall not be more than 16 mm in any culvert section, except where beveled ends for laying of curves are specified by the purchaser.

7.4 Length of Section - The underrun in length of a section shall not be more than 13 mm in any culvert.

7.5 Position of Reinforcement - The maximum variation in position of the reinforcement shall be ± 13 mm. In no case shall the cover over the reinforcement be less than 40 mm for the outside circumferential steel or be less than 25 mm for the inside circumferential steel as measured to the external or internal surface of the culvert. These tolerances or cover requirements do not apply to mating surfaces of the joints.

7.6 Area of Reinforcement - The areas of steel reinforcement shall be the design steel areas as shown in the manufacturer's shop drawings. Steel areas greater than those required shall not be cause for rejection. The permissible variation in diameter of any reinforcement shall conform to the tolerances

8. TESTING AND INSPECTION

8.1 Type of Test Specimen - Concrete compressive strength shall be determined from compression tests made on cylinders or cores. For cylinder testing a minimum of 4 cylinders shall be taken during each production run. For core testing, one core shall be cut from a culvert section selected at random from each group of 15 culverts or less of a particular size and production run. For each continuous production run, each group of 15 culverts of a single size or fraction thereof shall be considered separately for the purpose of testing and acceptance. A production run shall be considered continuous if not interrupted for more than 3 consecutive days.

8.2 Compression Testing - Cylinders shall be made and tested as prescribed by the ASTM C 39 Specification. Cores shall be obtained and tested for compressive strength in accordance with the provisions of the ASTM C 497 Specification.

8.3 Acceptability of Cylinder Tests - Failure of any of the 28 day test cylinders to meet 90 percent of the minimum compressive strength requirement can be cause for rejection.

8.4 Acceptability of Core Tests - The Compressive strength of the concrete in each group of culverts as defined in 8.1 is acceptable when the core test strength are equal to or greater than the design concrete strength. When the compressive strength of the core tested is less than the design concrete strength, the culvert from which that core was taken may be recored. When the compressive strength of the recore is equal to or greater than the design concrete strength, the compressive strength of the concrete in that group of culverts is acceptable.

8.4.1 When the compressive strength of any recore is less than the design concrete strength, the culvert from which that core was taken shall be rejected. Two culverts from the remainder of the group shall be selected at random and one core shall be taken from each. If the compressive strength of both cores is equal to or greater than the design concrete strength, the compressive strength of the remainder of that group of culverts is acceptable. If the compressive strength of either of the two cores tested is less than the design concrete strength, the remainder of the group of culverts shall be rejected or, at the option of the manufacturer, each culvert of the remainder of the group shall be cored and accepted individually, and any of these culverts that have cores with less than the design concrete strength shall be rejected.

8.4.2 Plugging Core Holes - The core holes shall be plugged and sealed by the manufacturer in a manner such that the culvert will meet all of the test requirements of this specification. Culverts so sealed shall be considered satisfactory for use.

8.4.3 Test Equipment - Every manufacturer furnishing culverts under this specification shall furnish all facilities and personnel necessary to carryout the test required.

9. JOINTS

The culverts shall be produced with flat butt ends. The ends of the culvert shall be such that when the sections are laid together they will make a continuous line of culverts with a smooth interior free of appreciable irregularities, all compatible with the permissible variations in Section 7. The joint width shall not exceed 20 mm.

10. WORKMANSHIP AND FINISH

The culverts shall be substantially free of fractures. The ends of the culverts shall be normal to the walls and centerline of the culvert section, within the limits of the variations given in Section 7, except where beveled ends are specified. The surface of the culverts shall be a smooth steel form or troweled surface. Trapped air pockets causing surface defects shall be considered as part of a smooth steel form finish.

11. REPAIRS

Culverts may be repaired, if necessary, because of imperfections in manufacture or handling damage and will be acceptable if, in the opinion of the purchaser, the repairs are sound, properly finished and cured, and the repaired section conforms to the requirements of this specification.

12. INSPECTION

The quality of materials, the process of manufacture, and the finished culverts shall be subject to inspection by the purchaser.

13. REJECTION

Culverts shall be subject to rejection on account of any of the specification requirements. Individual culverts may be rejected because of any of the following.

13.1 Fractures or cracks passing through the wall, except for a single end crack that does not exceed one half the thickness of the wall.

13.2 Defects that indicate proportioning, mixing, and molding not in compliance with Section 5.

13.3 Honeycombed or open texture, and

13.4 Damaged ends, where such damage would prevent making a satisfactory joint.

14. MARKING

Each culvert shall be clearly marked by waterproof paint. The following shall be shown on the inside of the vertical leg of the culvert section:

Culvert Section Span X Culvert Rise

Date of Manufacture

Name or trademark of the manufacturer

And in the case of headwall sections, east or west face shall also be marked

15. CONSTRUCTION REQUIREMENTS

15.1 Footings - the culverts shall be installed on either precast or cast-in-place concrete footings. The design size and elevation of the footers shall be as determined by the Engineer. A 75 mm deep keyway shall be formed in the top surface of the footing 75 mm clear of the outside faces of the culvert, unless specified otherwise on the plans. the footings shall be given a smooth float finish and shall reach a compressive strength of 14 MPa before placement of the culvert sections. The completed footing surface shall be constructed in accordance with grades shown on the plans. When tested with a 3000 mm straight edge, the surface shall not vary more than 6 mm in 3000 mm. If a precast concrete footer is used, the contractor shall prepare a 100 mm thick layer of compacted granular material the full width of the footer prior to placing the precast footer.

15.2 Placement of the Culverts - The culverts shall be placed as shown on the Engineer's plan drawings. Special care shall be taken in setting the culverts to the true line and grade. The culverts shall be set on 150 mm X 150 mm masonite or steel shims. A minimum of 13 mm gap shall be provided between the footing and the bottom of the culvert's vertical legs. The gap shall be filled with cement grout (portland cement and water or cement mortar composed of one part portland cement and three parts of sand, by volume, and water.

15.3 External Protection of Joints - The butt joint made by two adjoining culverts shall be covered with a 22 mm X 35 mm (32 mm round equivalent) piece of butyl rope and a minimum of 230 mm wide joint wrap. The surface shall be free of dirt before applying the joint material. A primer compatible with the joint wrap to be used shall be applied for a minimum width of 230 mm on each side of the joint. The external wrap shall be either EZ-WRAP RUBBER by PRESS-SEAL GASKET CORPORATION, SEAL WRAP by MAR MAC MANUFACTURING CO. INC. or approved equal. The joint shall be covered continuously from the bottom of the culvert leg, across the top of the arch and to the opposite culvert section leg. Any laps that result in the loint wrap shall be a minimum of 150 mm long with the overlap running downhill.

In addition to the joints between units, the joint between the end unit and the headwall shall be sealed. If using precast wingwalls, the joint between the end bridge unit and the wingwall shall be sealed with this type of wrap or at the discretion of the Engineer, filter fabric shall be substituted.

During the backfilling operation, care shall be taken to keep the joint wrap in its proper location over the joint.

15.4 Backfill - Backfill shall be considered as all replaced excavation and new embankment adjacent to the Con/Span or approved equal bridge units and wingwalls. The project construction and material specifications which include the specifications for excavation for structures and roadway excavation and embankment construction shall apply except as modified in this section.

Backfill material for a minimum width of 1220 mm on each side of the culvert, from the base of the unit to 300 mm above the outside corner shall be a soil meeting AASHTO classification A1, A2, A3 or A4 unless authorization to use a different materials given in writing by the designer. For heights of fill over 3660 mm, only A1 & A3 materials shall be used. Maximum dry density shall be determined by AASHTO T-99 or other approved methods. Backfill shall be placed and compacted in layers until the density is not less than 95% of maximum dry density. All material outside the backfill zone shall be good quality, well compacted ,embankment or in situ soil.

No backfill shall be placed against any structural elements until they have been approved by the Engineer.

Backfill against a waterproofed surface shall be placed carefully to avoid damage to the waterproofing material.

Mechanical tampers or approved compacting equipment shall be used to compact all backfill and embankment immediately adjacent to each side of the culvert and over the top of the culvert until it is covered to a minimum depth of 300 mm. The backfill within 1220 mm of each side of the culvert shall be placed in lifts of 200 mm or less (loose depth). Heavy compaction equipment shall not be operated in this area or over the culvert until it is covered to a depth of 300 mm.

Lightweight dozers and graders may be operated over culverts having one 300 mm of compacted cover, but heavy earth moving equipment (larger than a D-4 Dozer weighing in excess of 107 kN and having track pressures of 55 kPa or greater) shall require 600 mm of cover unless the design cover is less than 600 mm. In no case shall equipment operating in excess of the design load (MS18 or MS23) is to be permitted over the culvert unless approved by Con\Span or approved equal.

Any additional fill and subsequent excavation required to provide this minimum cover shall be made at no additional cost to the project.

As a precaution against introducing unbalanced stresses in the culvert and wingwalls, when placing backfill at no time shall the difference between the heights of fill on opposite sides of the culvert exceed 600 mm.

Backfill in front of wingwalls shall be carried to ground lines shown in the plans.

16. MEASUREMENT AND PAYMENT

The completed work as measured for Precast Culvert will be paid for at the contract unit price for the following contract item (pay item).

Pay Item	Pay Unit
10 973 x 3962 Precast Concrete Three - Sided Box Culvert	Meter

Payment for Precast Culvert shall be payment in full for labor, equipment and material necessary to design, manufacture and install the arch elements, including any steel shims needed to level the arch elements, casting holes in the elements as needed for guardrail posts, casting in the anchor assembly per STD. B-18-B, furnishing and placing the grout between the footing and the arch elements, precast headwall units, steel connection plates between units, and furnishing and placing the joint waterproofing.

METRIC

DIMENSIONS ARE IN MILLIMETERS UNLESS OTHERWISE SHOWN. ELEVATIONS, COORDINATES, CURVE AND ALIGNMENT DATA ARE IN METERS. STATIONS ARE IN KILOMETERS + METERS.

REVISIONS			
DSGN BY	M.A.M.	6-97
DR'N BY	R.J.D.	6-97
CK'D BY	R.G.W.	6-97
FINAL CK'D BY	M.D.W.	2-99
APP'D BY		

SNELL ENVIRONMENTAL GROUP, INC. A DLZ Company
151 W. CONGRESS, SUITE 328
DETROIT, MICHIGAN 48226
TELEPHONE (313) 961-4040

DETROIT Making it Better for you

CITY OF DETROIT
MICHIGAN

ASHLAND AVE.
OVER THE FOX CREEK
(BW-245)

PRECAST CULVERT
SPECIFICATIONS

SCALE NOT TO SCALE
PROJECT NO. 9641-5160-03
SHEET NO. A9 OF 22

FILE NAME: OBNOTE03.DGN

19

	BAR	DIMENSIONS a	b	c	d	e	f	g	h	j	NO. REQ'D	TOTAL MASS
ABUT. A	A1908520	8520									20	381
	C1902768	444	2278	0	0	0	207	490			10	62
	D1303458	1354	750	1354							84	289
										SUBTOTAL =		732 kg
	EA1900880	880									18	35
										EPOXY SUBTOTAL =		35 kg
ABUT. B	A1909935	9935									16	355
	D1302212	731	750	731							86	189
										SUBTOTAL =		544 kg
	EA1900880	880									18	35
										EPOXY SUBTOTAL =		35 kg
SUPERSTRUCTURE	EA1301022	1022									7	7
	EA1301090	1090									4	4
	EA1301115	1115									8	9
	EA1301345	1345									4	5
	EA1301820	1820									116	210
	EA1302255	2255									4	9
	EA1303012	3012									4	12
	EA1303915	3915									4	16
	EA1305070	5070									30	151
	EA1306500	6500									15	97
	EA1312742	12742									12	152
	EA1312750	12750									20	253
	EA1312786	12786									4	51
	EA1313110	13110									4	52
	EJ1904097	2159	371	370	524	1414	3098				4	37
	EJ1904098	2159	371	370	524	1415	3100				2	18
	EJ1904101	2159	371	371	525	1417	3105				4	37
	EJ1904103	2159	371	372	525	1419	3115				4	37
	EJ1904108	2159	371	373	526	1423	3129				4	37
	EJ1904116	2159	372	376	529	1428	3146				2	18
	EJ1904124	2159	372	378	531	1434	3167				4	37
	EJ1904133	2159	372	381	533	1441	3193				2	18
	EJ1904144	2159	373	385	536	1449	3222				4	37
	EJ1904156	2159	373	388	539	1458	3255				2	19
	EJ1904170	2159	374	393	543	1468	3292				4	37
	EJ1904184	2159	374	397	546	1479	3333				2	19
	EJ1904199	2159	375	402	550	1490	3378				4	38
	EJ1904216	2159	375	407	554	1503	3427				2	19
	EJ1904235	2159	376	413	559	1517	3480				4	38
	EJ3206888	2776	482	1223	1314	2798	12422				2	88
	EJ3206891	2776	482	1223	1315	2800	12433				2	88
	EJ3206897	2776	482	1225	1317	2804	12473				2	88
	EJ3206907	2776	482	1229	1320	2811	12534				2	88
	EJ3206921	2776	482	1233	1324	2821	12635				2	89
	EJ3206940	2776	482	1239	1329	2835	12733				2	89
	EJ3206963	2776	482	1246	1336	2851	12902				2	89

	BAR	DIMENSIONS a	b	c	d	e	f	g	h	j	NO. REQ'D	TOTAL MASS
SUPERSTRUCTURE	EJ3206989	2776	482	1254	1344	2869	13030				2	90
	EJ3207019	2776	481	1263	1352	2891	13276				2	90
	EJ3207027	2695	563	1428	1535	2797	12422				2	90
	EJ3207036	2695	563	1431	1538	2803	12473				2	90
	EJ3207054	2776	481	1275	1362	2916	13427				2	90
	EJ3207062	2695	563	1439	1546	2821	12635				2	90
	EJ3207091	2776	481	1286	1373	2942	13760				2	91
	EJ3207105	2695	563	1455	1560	2850	12902				2	91
	EJ3207133	2777	481	1299	1385	2971	13962				2	91
	EJ3207166	2696	562	1475	1579	2891	13276				2	92
	EJ3207177	2777	481	1313	1398	3002	14346				2	92
	EJ3207225	2777	480	1328	1412	3036	14523				2	93
	EJ3207241	2696	562	1502	1604	2941	13760				2	93
	EJ3207277	2777	480	1344	1427	3073	15044				2	93
	EJ3207331	2696	561	1533	1633	3002	14346				2	94
	EJ3207433	2696	561	1570	1667	3070	15044				2	95
	EK1901367	436	140	140	215						1	3
	EK1901373	439	140	140	215						2	6
	EK1901387	446	140	140	215						1	3
	EK1901389	447	140	140	215						1	3
	EK1901413	459	140	140	215						1	3
	EK1901417	461	140	140	215						2	6
	EK1901419	462	140	140	215						1	3
	EK1901427	466	140	140	215						1	3
	EK1901431	468	140	140	215						1	3
	EK1901445	475	140	140	215						1	3
	EK1901449	477	140	140	215						1	3
	EK1901453	479	140	140	215						2	6
	EK1901477	491	140	140	215						1	3
	EK1901485	495	140	140	215						1	3
	EK1901497	501	140	140	215						1	3
	EK1901501	503	140	140	215						1	3
	EK1901517	511	140	140	215						1	3
	EK1901529	517	140	140	215						1	3
	EK1901555	530	140	140	215						1	3
	EK1901559	532	140	140	215						1	3
	EK1901569	537	140	140	215						1	4
	EK1901583	544	140	140	215						1	4
	EK1901623	564	140	140	215						1	4
	EK1901629	567	140	140	215						1	4
	EK1901631	568	140	140	215						1	4
	EK1901647	576	140	140	215						1	4
	EK1901705	605	140	140	215						2	8
	EK1901709	607	140	140	215						1	4
	EK1901723	614	140	140	215						1	4
	EK1901789	647	140	140	215						1	4
	EK1901795	650	140	140	215						1	4
	EK1901799	652	140	140	215						1	4
	EK1901809	657	140	140	215						1	4
	EK1901885	695	140	140	215						1	4
	EK1901899	702	140	140	215						1	4
	EK1901901	703	140	140	215						1	4

	BAR	DIMENSIONS a	b	c	d	e	f	g	h	j	NO. REQ'D	TOTAL MASS
SUPERSTRUCTURE	EK1901905	705	140	140	215						1	4
	EK1901993	749	140	140	215						1	4
	EK1902013	759	140	140	215						2	9
	EK1902113	809	140	140	215						2	9
	EK1902133	819	140	140	215						1	5
	EK1902137	821	140	140	215						1	5
	EK1902141	823	140	140	215						1	5
	EK1902243	874	140	140	215						1	5
	EK1902263	884	140	140	215						1	5
	EK1902271	888	140	140	215						1	5
	EK1902279	892	140	140	215						1	5
	EK1902387	946	140	140	215						1	5
	EK1902405	955	140	140	215						1	5
	EK1902419	962	140	140	215						1	5
	EK1902431	968	140	140	215						1	5
	EK1902543	1024	140	140	215						1	6
	EK1902561	1033	140	140	215						1	6
	EK1902577	1041	140	140	215						1	6
	EK1902597	1051	140	140	215						1	6
	EK1902713	1109	140	140	215						1	6
	EK1902727	1116	140	140	215						1	6
	EK1902749	1127	140	140	215						1	6
	EK1902765	1135	140	140	215						1	6
	EK1902887	1196	140	140	215						1	6
	EK1902907	1206	140	140	215						1	6
	EK1902931	1218	140	140	215						1	7
	EK1902933	1219	140	140	215						1	7
	EK1903059	1282	140	140	215						1	7
	EK1903099	1302	140	140	215						1	7
	EK1903101	1303	140	140	215						1	7
	EK1903129	1317	140	140	215						1	7
	EK1903231	1368	140	140	215						1	7
	EK1903265	1385	140	140	215						2	15
	EK1903299	1402	140	140	215						1	7
	EK1903335	1420	140	140	215						1	7
	EK1903399	1452	140	140	215						2	15
	EK1903499	1502	140	140	215						1	8
	EK1903539	1522	140	140	215						1	8
	EK1903697	1601	140	140	215						1	8
	EK1903741	1623	140	140	215						1	8
	EK1903895	1700	140	140	215						1	9

REINFORCEMENT SHALL BE BUNDLED AND TAGGED AS TO THE LOCATION AS SHOWN ON THIS SHEET.

ALL BENDS IN REINFORCING STEEL TO BE MADE ABOUT A PIN OF THE MINIMUM DIAMETER ALLOWED BY THE STANDARD SPECIFICATIONS.

TOLERANCES IN CUTTING AND BENDING BARS ARE AS ESTABLISHED IN THE MANUAL OF STANDARD PRACTICE OF THE CONCRETE REINFORCING STEEL INSTITUTE AND DETAILING MANUAL OF THE AMERICAN CONCRETE INSTITUTE.

WHERE FIELD CUTTING OF EPOXY BARS IS REQUIRED, THE CONTRACTOR SHALL REPAIR THE EPOXY COATING AT THE CUT END AS PROVIDED FOR IN STANDARD SPECIFICATION 706.03.E.8.

EPOXY COATED
BAR SIZE
BAR LENGTH (mm)
EA2013000
BAR SHAPE

BAR LEGEND

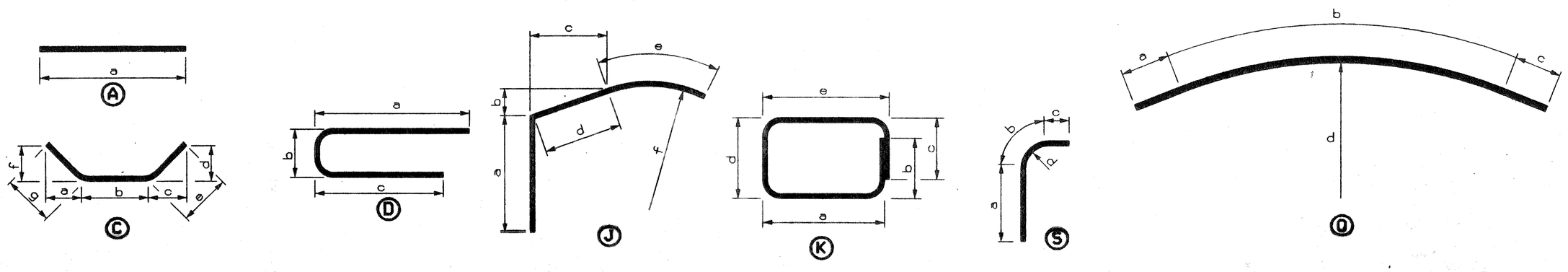

METRIC

DIMENSIONS ARE IN MILLIMETERS UNLESS OTHERWISE SHOWN. ELEVATIONS, COORDINATES, CURVE AND ALIGNMENT DATA ARE IN METERS. STATIONS ARE IN KILOMETERS + METERS.

REVISIONS			
DSGN BY	C.D.P.	6-97
DR'N BY	R.J.D.	6-97
CK'D BY	R.G.W.	6-97
FINAL CK'D BY	M.D.W.	2-99
APP'D BY		

SEG

SNELL ENVIRONMENTAL GROUP, INC. A DLZ Company
1511 W. CONGRESS, SUITE 328
DETROIT, MICHIGAN 48226
TELEPHONE (313) 961-4040

DETROIT Making it better for you

CITY OF DETROIT
MICHIGAN

ASHLAND AVE.
OVER THE FOX CREEK
(BW-245)

STEEL REINFORCEMENT

SCALE NOT TO SCALE
PROJECT NO. 9641-5160-03
SHEET NO. A10 OF 22

FILE NAME: 09BAR03.DGN

20

N:\96415160.03\bridge\finals\10bar Feb. 2, 1999 16:06:41

SUPERSTRUCTURE

BAR	DIMENSIONS a	b	c	d	e	f	g	h	j	NO. REQ'D	TOTAL MASS
EK1903943	1724	140	140	215						1	9
EK1904089	1797	140	140	215						2	18
EK1904143	1824	140	140	215						2	19
ES3209292	0	7933	1359	12254						2	119
ES3209343	0	7979	1364	12358						2	120
ES3209445	0	8071	1374	12567						2	121
ES3209595	0	8207	1388	12879						2	123
ES3209795	0	8387	1408	13298						2	125
ES3210037	0	8606	1431	13819						2	129
ES3210323	0	8864	1459	14445						2	132
ES3211885	1358	9169	1358	12242						2	152
ES3211910	1361	9188	1361	12291						2	153
ES3211985	1368	9249	1368	12450						2	154
ES3212108	1380	9348	1380	12710						2	155
ES3212280	1397	9486	1397	13075						2	157
ES3212499	1419	9661	1419	13547						2	160
ES3212758	1445	9868	1445	14119						2	163
ES3213059	1475	10109	1475	14798						2	167
ED1301186	490	206	490							75	88
ED1901878	870	138	870							60	252
							EPOXY SUBTOTAL =				6486 kg

SUMMARY OF QUANTITIES

ITEM NO.	ITEM DESCRIPTION	UNIT	QUANTITY
1500000	MOBILIZATION, MAX.	Lsum	1
2020002	TREE, REMOVE, 451 TO 900 mm	ea	2
2040005	CURB, REMOVE	m	76
2040011	PAVEMENT, REMOVE	m2	320
2040013	SIDEWALK, REMOVE	m2	116
2040020	STRUCTURES, REMOVE	Lsum	1
2047102	FENCE, REMOVAL, SALVAGE AND REPLACE	m	92
2050010	EMBANKMENT, CIP	m3	110
2060002	BACKFILL, STRUCTURE, CIP	m3	1030
2060011	EXCAVATION, FOUNDATION	m3	1200
2080025	EROSION CONTROL, SILT FENCE	m	63
3020014	AGGREGATE BASE, 100 mm	m2	353
3050001	BITUMINOUS BASE CRUSHING AND SHAPING	m2	146
4017102	10 973 X 3962 PRECAST CONC THREE-SIDED BOX CULVERT	m	6.2
4030043	DRAINAGE STRUCTURE COVER, ADJUST, ADDITIONAL DEPTH	m	1
4030045	DRAINAGE STRUCTURE COVER, ADJUST, CASE 1	ea	1
4040030	UNDERDRAIN, FOUNDATION, 100 mm	m	44
4040110	UNDERDRAIN, OUTLET ENDING, 100 mm	ea	2
5020115	BIT. MIXTURE NO. 1100L, 20AA	t	37
5020116	BIT. MIXTURE NO. 1100T, 20AA	t	43
6020206	CONCRETE PAVEMENT WITH INTEGRAL CURB (TYPE IIIR), REINFORCED 240 mm	m2	450
7047051	FLOW DIVERSION	Lsum	1
7060007	CONCRETE, GRADE D	m3	14
7060010	CONCRETE, GRADE S2, SUBFOOTING	m3	7
7060020	SUBSTRUCTURE CONCRETE	m3	42
7060022	SUPERSTRUCTURE CONCRETE	m3	54
7060024	SUPERSTRUCTURE CONCRETE, FORM, FINISH, AND CURE	LS	1
7060030	REINFORCEMENT, STEEL	kg	1276
7060031	REINFORCEMENT, STEEL, EPOXY COATED	kg	6556
7060040	CONCRETE, LOW TEMPERATURE PROTECTION	m3	152
7060250	STRUCTURE NAME PLATE	ea	2
7100001	JOINT WATERPROOFING	m2	27
7110004	BRIDGE RAILING, SOLID PARAPET TYPE	m	26
7110007	BRIDGE RAILING, ONE TUBE	m	26
8030002	SIDEWALK, CONCRETE, 100 mm	m2	146
8110241	PAVT MRKG, REGULAR DRY, 100 mm, WHITE	m	100
8110242	PAVT MRKG, REGULAR DRY, 100 mm, YELLOW	m	100
8120026	PLASTIC DRUM, LIGHTED, FURN	ea	20
8120027	PLASTIC DRUM, LIGHTED, OPER	ea	20
8120036	BARRICADE, TYPE III, LIGHTED, FURN.	ea	8
8120037	BARRICADE, TYPE III, LIGHTED, OPER.	ea	8
8120041	CONCRETE BARRIER, TEMPORARY, FURNISHED	m	36.5
8120042	CONCRETE BARRIER, TEMPORARY, OPERATED	m	36.5
8120054	MINOR TRAFFIC DEVICES	LS	1
8120060	SIGN, TYPE B TEMPORARY, PRISMATIC RETRFLEC SHEETING	m2	35.0
8160003	WATER	kL	22
8160007	SEEDING, MIXTURE TUF	kg	3
8160020	FERTILIZER, CHEMICAL NUTRIENT, CLASS A	kg	3
8160072	MULCH ANCHORING	m2	100
8160077	MULCH BLANKET	m2	100
8017120	DRIVEWAY, NONREINFORCED CONCRETE	m^3	9

METRIC

DIMENSIONS ARE IN MILLIMETERS UNLESS OTHERWISE SHOWN. ELEVATIONS, COORDINATES, CURVE AND ALIGNMENT DATA ARE IN METERS. STATIONS ARE IN KILOMETERS + METERS.

REVISIONS			
	DSGN BY	C.D.P.	6-97
	DR'N BY	R.J.D.	6-97
	CK'D BY	R.G.W.	6-97
	FINAL CK'D BY	M.D.W.	2-99
	APP'D BY		

SEG SNELL ENVIRONMENTAL GROUP, INC. A DLZ Company
151 W. CONGRESS, SUITE 328
DETROIT, MICHIGAN 48226
TELEPHONE (313) 961-4040

DETROIT Making it better for you

CITY OF DETROIT
MICHIGAN

ASHLAND AVE.
OVER THE FOX CREEK
(BW-245)

STEEL REINFORCEMENT
AND
QUANTITIES

SCALE NOT TO SCALE
PROJECT NO. 9641-5160-03
SHEET NO. A11 OF 22

FILE NAME: 09BAR03.DGN

21

h:\96415160.03\bridge\finals\llqty Feb. 2, 1999 17:35:45

MISCELLANEOUS QUANTITIES

	ITEM	UNIT	AMOUNT
	BARRICADE, TYPE III, LIGHTED, OPER	ea	8
	BARRICADE, TYPE III, LIGHTED, FURN	ea	8
	PLASTIC DRUM, LIGHTED, FURN	ea	20
	PLASTIC DRUM, LIGHTED, OPER	ea	20
	SIGN, TYPE B, TEMPORARY, PRISMATIC RETROREFLECTIVE SHEETING	m2	35.0
	PAVT MRKG, REGULAR DRY, 100 mm, WHITE	m	100
	PAVT MRKG, REGULAR DRY, 100 mm, YELLOW	m	100
*	CONCRETE BARRIER, TEMPORARY, FURNISHED	m	36.5
*	CONCRETE BARRIER, TEMPORARY, OPERATED	m	36.5
	MINOR TRAFFIC DEVICES	LS	1

* CONCRETE BARRIER, TEMPORARY IS TO BE PLACED BEHIND TYPE III BARRICADES.

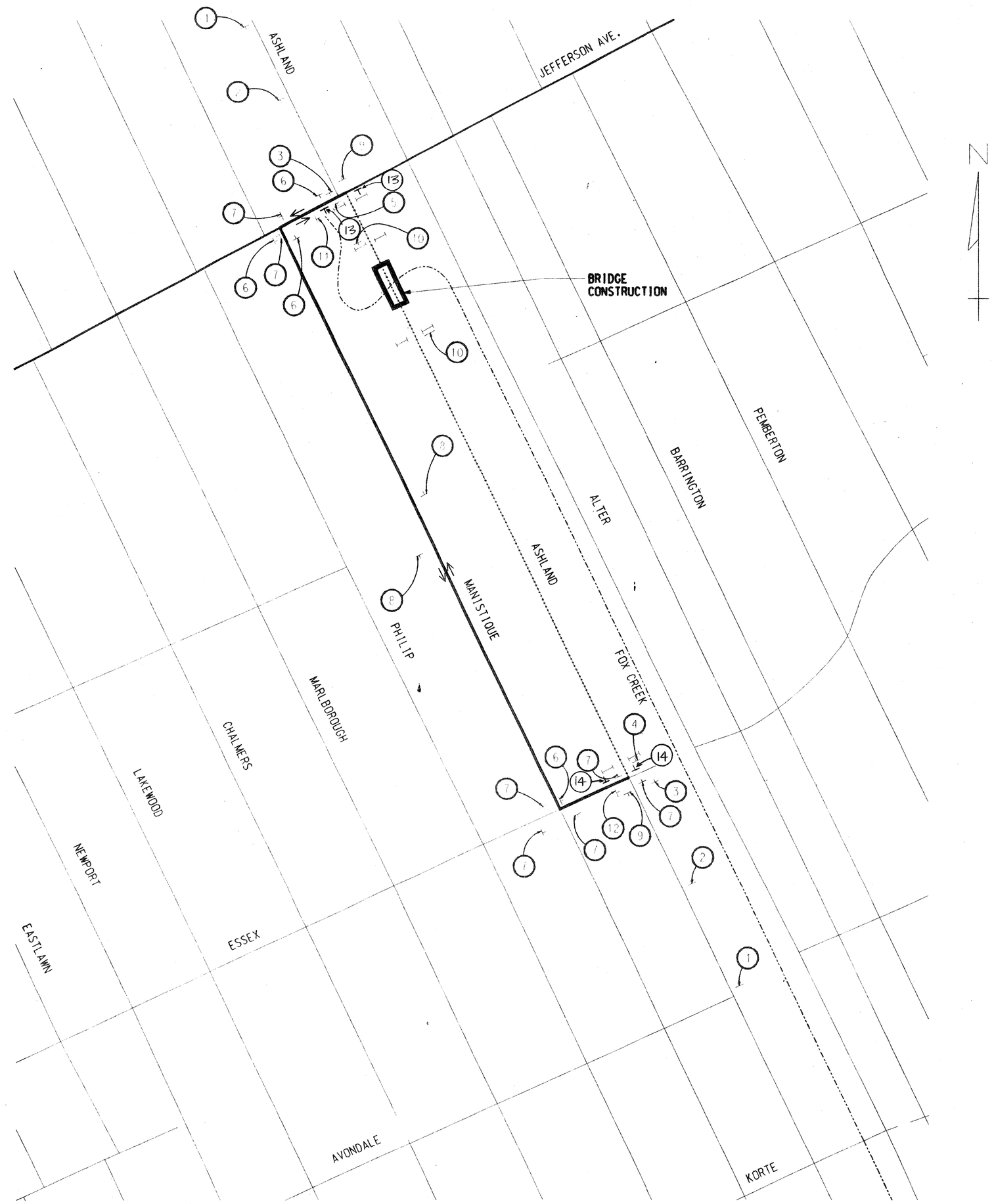

SIGN TYPE LEGEND

- SIGN, TYPE B
- TYPE III BARRICADE

SIGN CHART

I.D. NUMBER	SIGN	SIGN DESIGNATION	SIZE	NUMBER REQUIRED
1	ROAD CLOSED 1/2 MILE	W20-3	1200X1200	2
2	DETOUR AHEAD	W20-2	1200X1200	2
3	ROAD CLOSED AHEAD	W20-3	1200X1200	2
4	ROAD CLOSED TO THRU TRAFFIC DETOUR	R11-4 M4-10	1500X750 1200X450	1
5	ROAD CLOSED TO THRU TRAFFIC DETOUR	R11-4 M4-10	1500X750 1200X450	1
6	ASHLAND AVE DETOUR	D3-1 M4-9	1200X300 750X600	4
7	ASHLAND AVE DETOUR	D3-1 M4-9	1200X300 750X600	8
8	ASHLAND AVE DETOUR	D3-1 M4-9	1200X300 750X600	2
9	DETOUR ENDS	M4-8a	600X450	2
10	ROAD CLOSED	R11-2	1200X750	2
11	ASHLAND AVE	D3-1 M6-1b	1200X300 525X375	1
12	ASHLAND AVE	D3-1 M6-1b	1200X300 525X375	1
13	SIDEWALK CLOSED AHEAD	R11-4	1500 x 750	2
14	SIDEWALK CLOSED AHEAD NO ACCESS TO JEFFERSON AVE.	R11-4 R11-2	1500 x 750 1200 x 750	2

NOTES:

THE CONTRACTOR WILL FURNISH AND ERECT THE SIGNS LISTED ON THE SIGN CHART AT THE LOCATIONS SHOWN.

AS DIRECTED BY THE ENGINEER, THE CONTRACTOR SHALL PROVIDE AND MAINTAIN ANY ADDITIONAL SIGNS, BARRICADES AND LIGHTS WITHIN THE PROJECT TO PROTECT THE TRAFFIC AND WORK AREA.

THE CONTRACTOR SHALL PLACE SANDBAGS ON BARRICADES TO PREVENT MOVEMENT OF THE BARRICADES. THE CONTRACTOR SHALL ATTACH AND MAINTAIN THREE (3) STEADY BURN AMBER LIGHTS (TYPE "C") ON EACH OF THE BARRICADES.

THE CONTRACTOR SHALL ATTACH AND MAINTAIN ONE (1) BATTERY OPERATED AMBER FLASHER LIGHTS (TYPE "A") AND ONE (1) ORANGE FLUORESCENT DAY-GLO FLAG ON EACH ADVANCE CONSTRUCTION SIGN (SIGNS ①, ② & ③).

TRAFFIC CONTROL SIGNS WHICH ARE REMOVED FROM THE VICINITY OF THE PROJECT DUE TO INTERFERENCE SHALL BE TURNED OVER TO THE CITY. UPON COMPLETION OF THE PROJECT, TRAFFIC CONTROL SIGNS AND STREET NAME SIGNS WILL BE RESET IN THEIR PROPER POSITION BY THE CONTRACTOR.

THE CONTRACTOR SHALL NOT BEGIN ANY OPERATIONS ON THE PROJECT UNTIL ALL OF THE SIGNS HAVE BEEN POSITIONED AND FLASHER LIGHTS AND FLAGS ARE ATTACHED TO ALL REQUIRED SIGNS AND BARRICADES.

ANY OTHER SIGNS WHICH THE CONTRACTOR MAY BE REQUIRED TO FURNISH SHALL CONFORM TO THE MICHIGAN MANUAL OF UNIFORM TRAFFIC CONTROL DEVICES.

ALL CONSTRUCTION SIGNS SHALL CONFORM TO MDOT 1996 STANDARD SPECIFICATIONS FOR CONSTRUCTION 812.02.B.1.

METRIC

DIMENSIONS ARE IN MILLIMETERS UNLESS OTHERWISE SHOWN. ELEVATIONS, COORDINATES, CURVE AND ALIGNMENT DATA ARE IN METERS. STATIONS ARE IN KILOMETERS + METERS.

REVISIONS			
DSGN BY	C.D.P.	6-97
DR'N BY	R.J.D.	6-97
CK'D BY	R.G.W.	6-97
FINAL CK'D BY	M.D.W.	2-99
APP'D BY		

SNELL ENVIRONMENTAL GROUP, INC. A DLZ Company
151 W. CONGRESS, SUITE 328
DETROIT, MICHIGAN 48226
TELEPHONE (313) 961-4040

DETROIT — Making it better for you

CITY OF DETROIT
MICHIGAN

ASHLAND AVE.
OVER THE FOX CREEK
(BW-245)

DETOUR PLAN

SCALE NOT TO SCALE
PROJECT NO. 9641-5160-03
SHEET NO. A12 OF 22

FILE NAME: .DGN

22

h:\96415160.03\bridge\finals\12tra Feb. 2, 1999 16:16:47

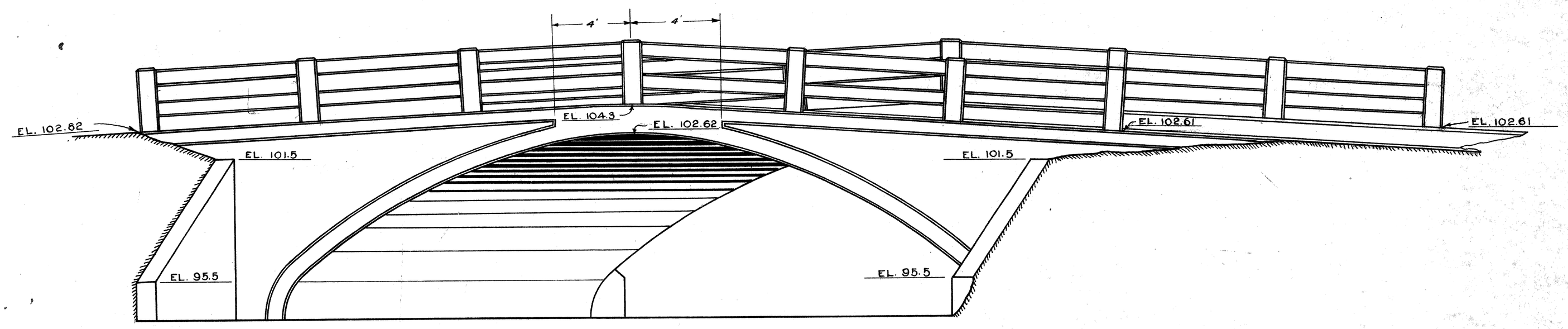

ELEVATION

Note: All pavements, sidewalks, and such portion of fill as is not obtained from excavations made in course of bridge construction, will be made by the City of Detroit.

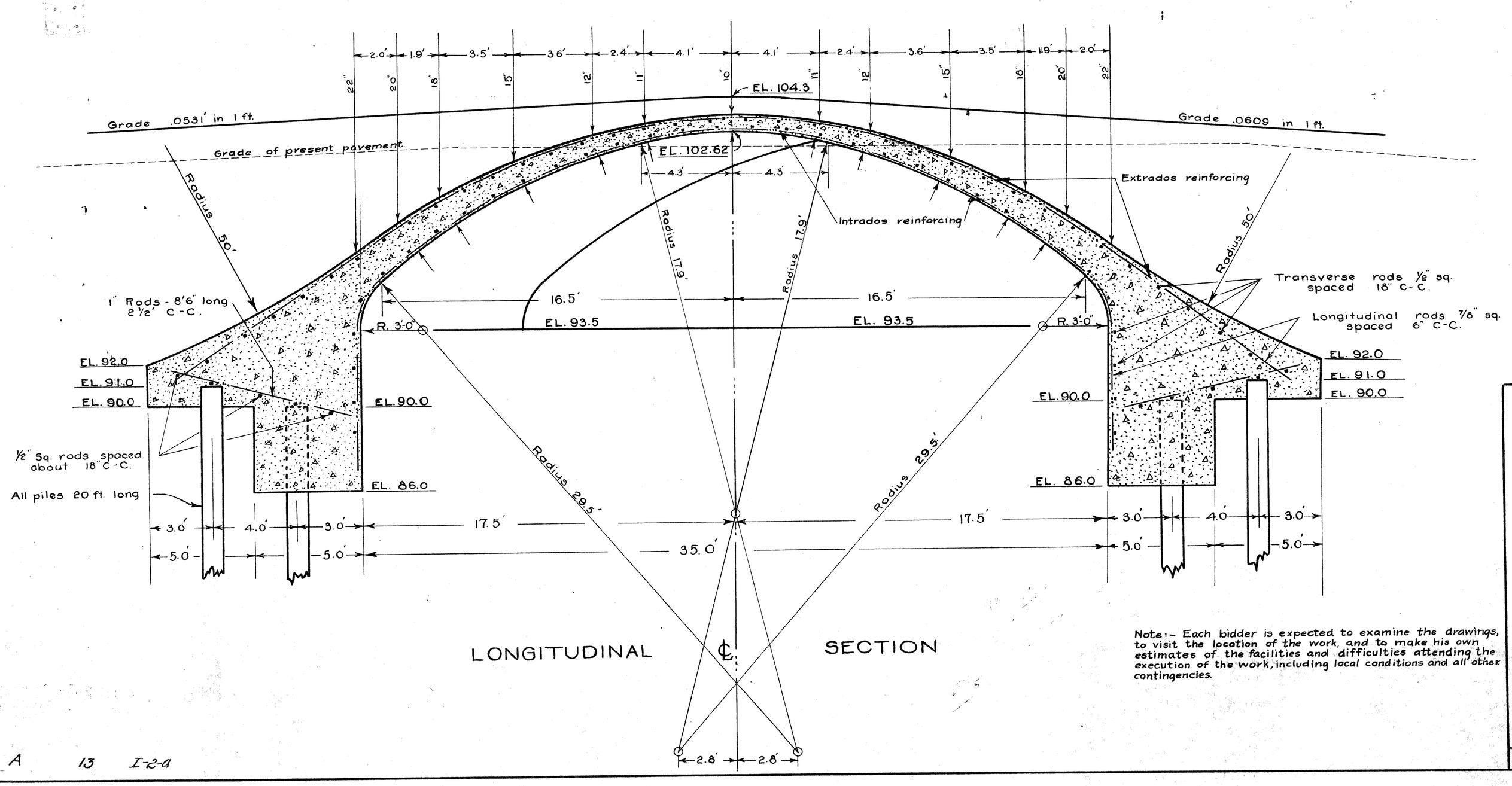

LONGITUDINAL ℄ SECTION

Note:- Each bidder is expected to examine the drawings, to visit the location of the work, and to make his own estimates of the facilities and difficulties attending the execution of the work, including local conditions and all other contingencies.

APPROVED: Charles E. Stubbell
City Engineer.

APPROVED: [illegible]
Ass't Engineer.

ASHLAND AVE. BRIDGE OVER FOX CREEK

SOUTH OF EAST JEFFERSON

CONCRETE ARCH

CITY OF DETROIT

CITY ENGINEER'S OFFICE
AUGUST 21, 1917.

Scale: 1" = 3'	Computed: [illegible]	Drawn: M.&G.	Checked: [illegible]	Traced: M.&G.

A 13 I-2-a

A-15 II-1

File BW 245-5

II 2

A 13 I-2b

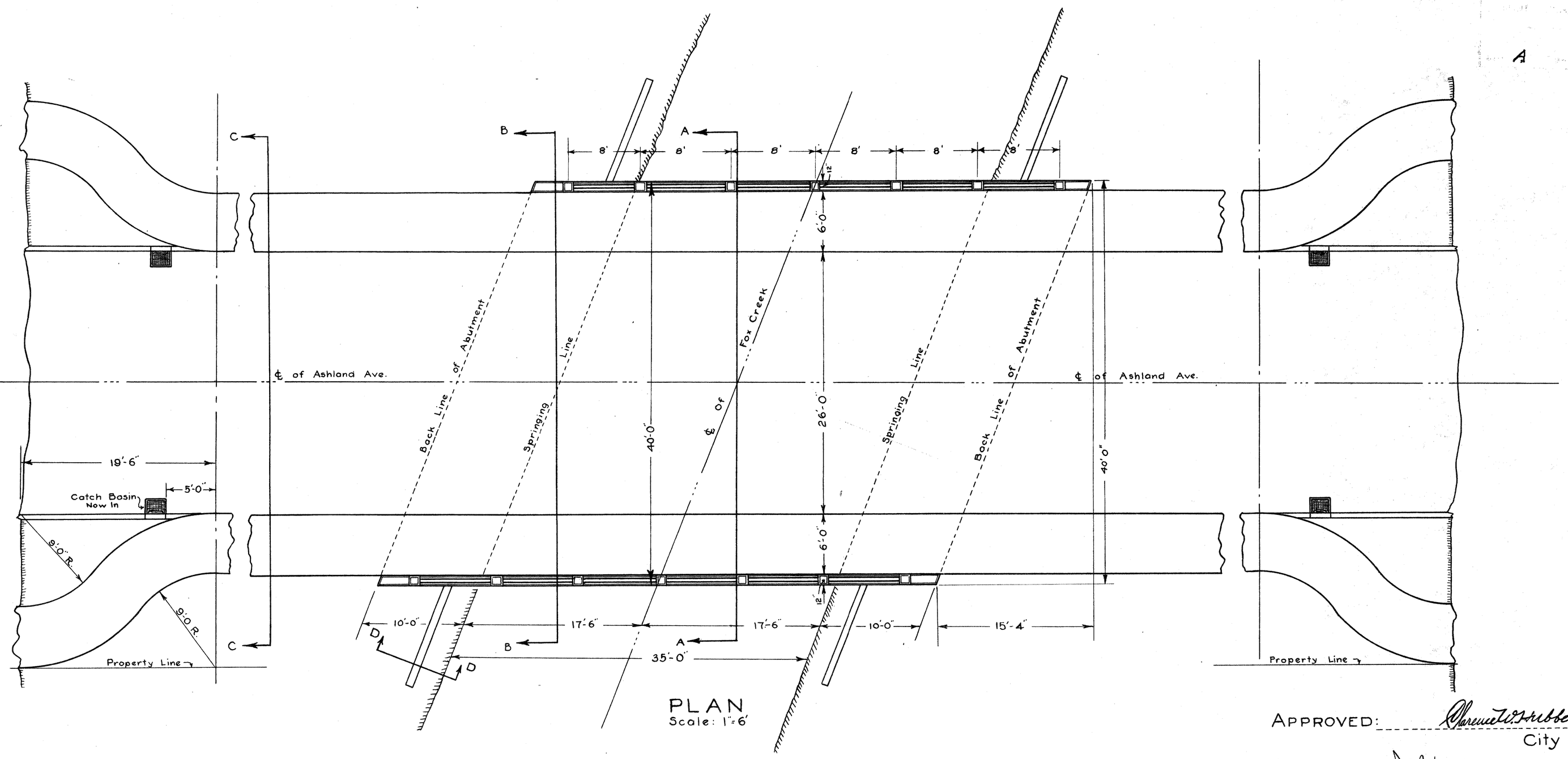

PLAN
Scale: 1" = 6'

APPROVED: Clarence W. Hubbell
City Engineer.

APPROVED: J. H. Hunter
Ass't Engineer.

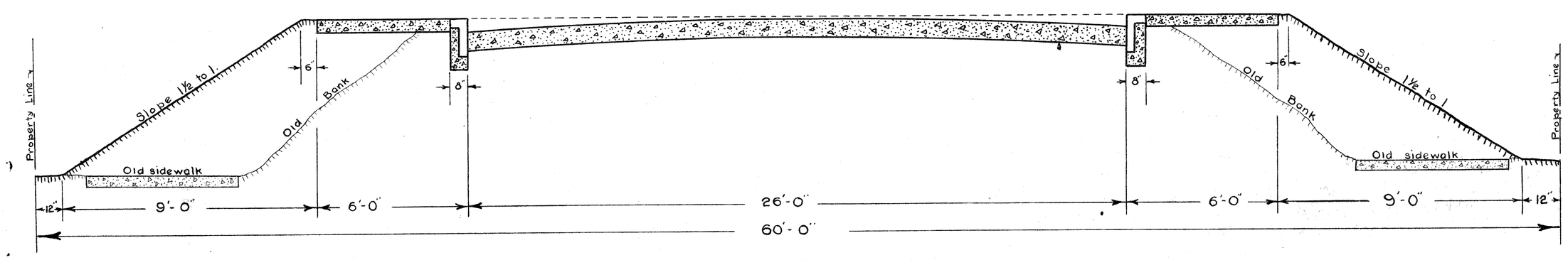

SECTION C-C
Scale: 1" = 3'

ASHLAND AVE. BRIDGE OVER FOX CREEK
SOUTH OF EAST JEFFERSON
CONCRETE ARCH

CITY OF DETROIT
CITY ENGINEER'S OFFICE
AUGUST 21, 1917.

Scale: As Shown	Computed:	Drawn: M.G.L.	Checked:	Traced: M.G.L.

A. 13 II-2

File BW 245-6

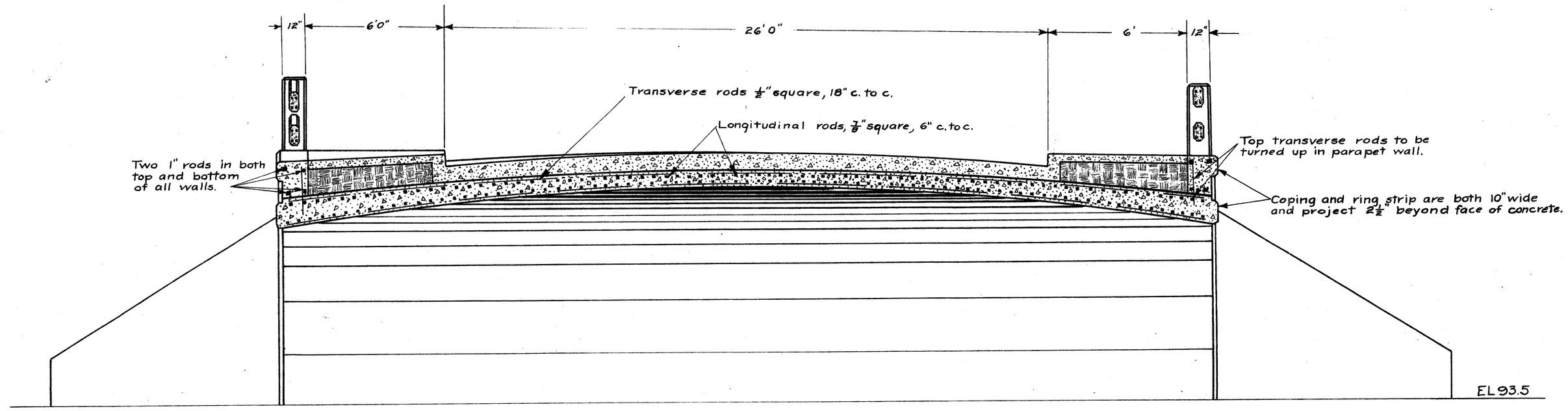

SECTION A-A.

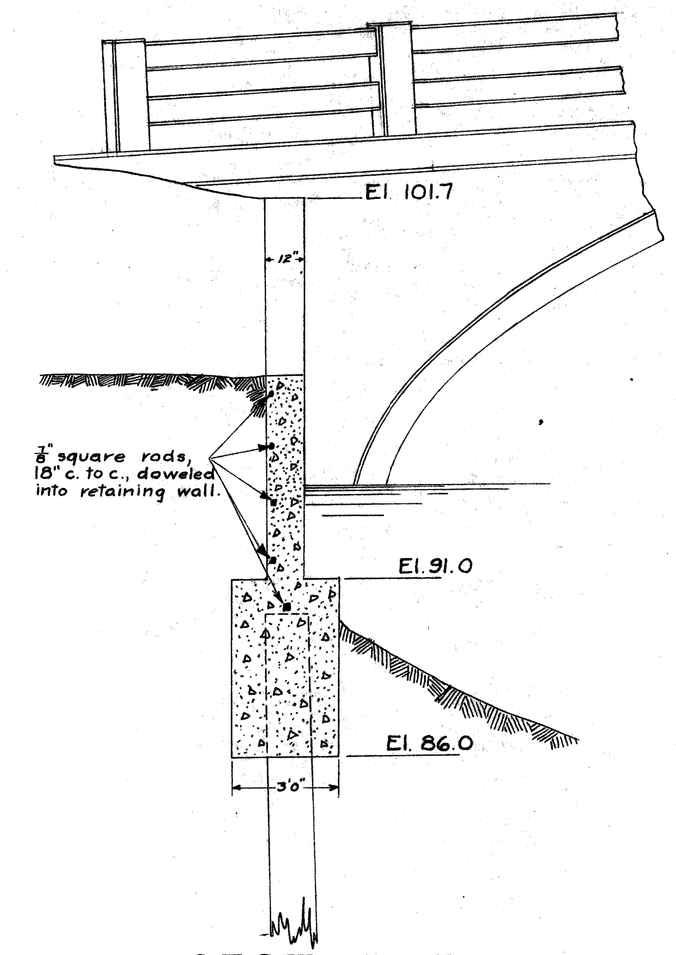

SECTION D-D.

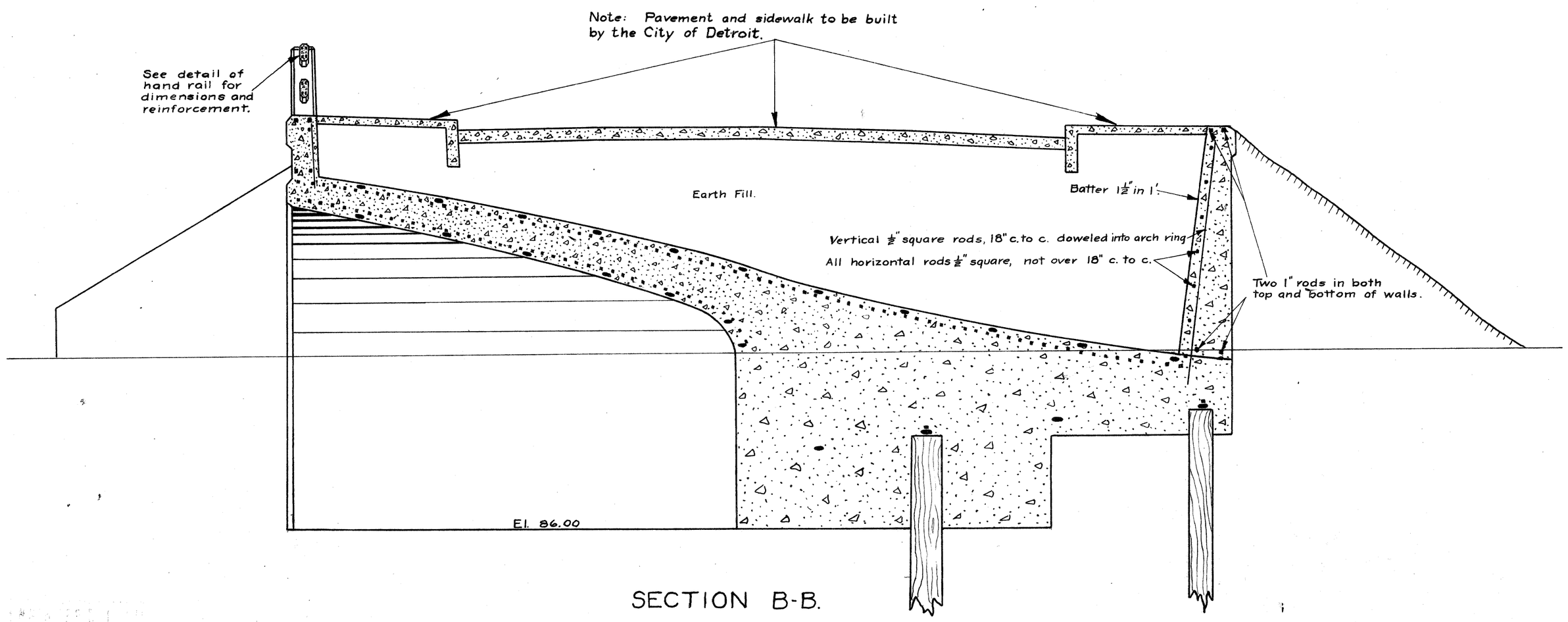

SECTION B-B.

APPROVED: Charles E. Hubbell
City Engineer.

APPROVED: J. R. Hudson
Ass't. Engineer.

ASHLAND AVE. BRIDGE OVER FOX CREEK SOUTH OF EAST JEFFERSON

CONCRETE ARCH

CITY OF DETROIT
CITY ENGINEER'S OFFICE.
AUGUST 21, 1917.

Scale: 3"=1"	Computed:	Drawn M.E.L.	Checked	Traced

A 13 I-2-C

A-13 I-3

F.L. Ray 245-7

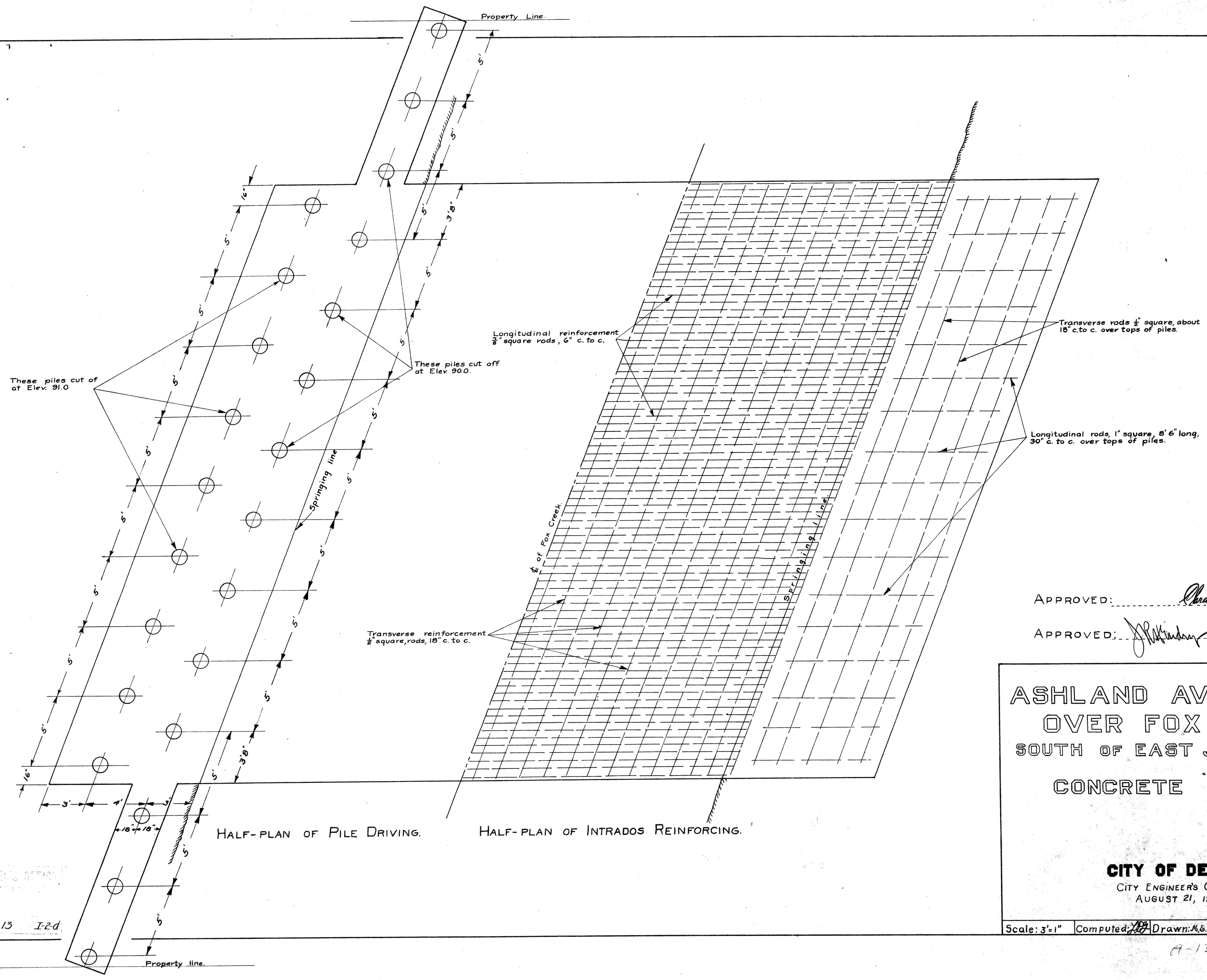

APPROVED: Bruce W. Hubbell
City Engineer.

APPROVED: J. R. Lindsay
Ass't Engineer.

ASHLAND AVE. BRIDGE OVER FOX CREEK SOUTH OF EAST JEFFERSON

CONCRETE ARCH

CITY OF DETROIT

CITY ENGINEER'S OFFICE
AUGUST 21, 1917

Scale: 3'=1"	Computed:	Drawn: M.E.S.	Checked:	Traced: A.de.la.C.

CITY ENGINEER'S OFFICE
A 13 I-2d

A-13 II-4

File BW 245-8

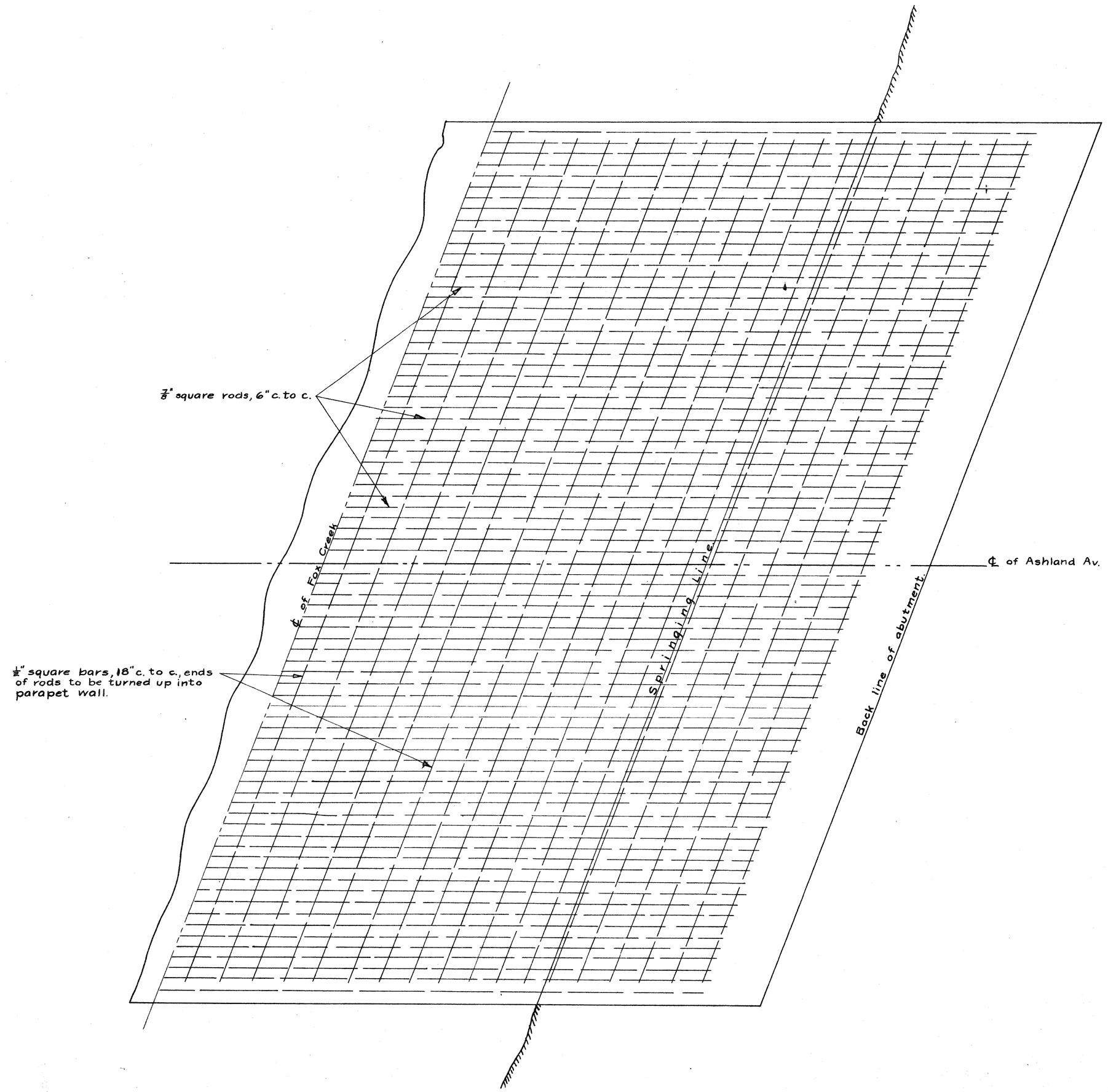

HALF-PLAN OF EXTRADOS REINFORCEMENT.

Scale 3' = 1"

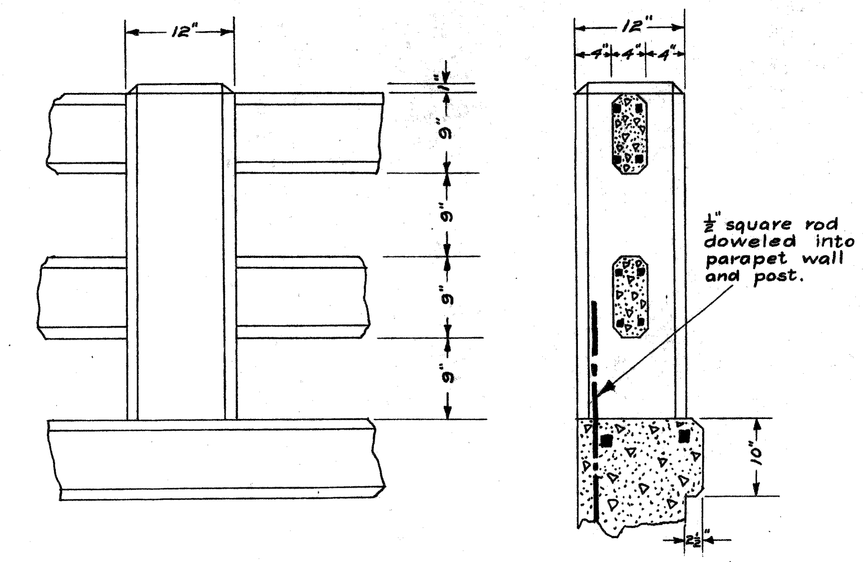

DETAIL OF HAND RAIL

Scale 1" = 1'.

APPROVED: Clement W. Hubbell
City Engineer.

APPROVED: J. R. Lindsay
Ass't Engineer.

ASHLAND AVE. BRIDGE OVER FOX CREEK SOUTH OF EAST JEFFERSON

CONCRETE ARCH

CITY OF DETROIT

CITY ENGINEER'S OFFICE
AUGUST 21, 1917

Scale: As Shown	Computed:	Drawn:	Checked:	Traced:

A 13 I-2-e

A-13 II-5

File BW 245-9