RIVERSIDE AVE. INDEX OF SHEETS

PLANS	SHEET No.
TITLE SHEET	1
GENERAL PLAN OF SITE	R2
LOG OF BORINGS	R3
GENERAL PLAN OF STRUCTURE	R4
FOOTING DETAILS	R5
MISCELLANEOUS DETAILS	R6
PRECAST CULVERT SPECIFICATIONS	R7
STEEL REINFORCEMENT AND QUANTITES	R8

CITY OF DETROIT

DENNIS W. ARCHER-MAYOR

CITY ENGINEERING DIVISION
DEPARTMENT OF PUBLIC WORKS

PLANS FOR PROPOSED

REPLACEMENT OF THE RIVERSIDE AVE. BRIDGE OVER CANAL (BW-242), FEDERAL STRUCTURE NO. 0108300B02

72 HOURS (3 WORKING DAYS) BEFORE YOU DIG CALL MISS DIG 800-482-7171 (TOLL-FREE)

THE CITY OF DETROIT — SPERANTVS DELIOPA — ABSVNDET CHARITAS — MICHIGAN

MDOT STANDARD PLANS

LIGHTED ARROWS AND BARRICADES	R-125A
SOIL EROSION AND SEDIMENTATION CONTROL MEASURES	R-96A
SEEDING AND SODDING	R-100B
WOLDING, BEVEL, LIGHT STANDARD ANCHOR BOLT ASSEMBLY AND NAME PLATE DETAILS	B-103B
BRIDGE RAILING, SOLID PARAPET TYPE	B-18B
BRIDGE RAILING, 1 TUBE	B-24A

CITY OF DETROIT STANDARD PLANS (3-7-98)

TYPE IIIR INTEGRAL CURB	C-4380
TYPICAL PAVEMENT CROSS SECTION	C-4381

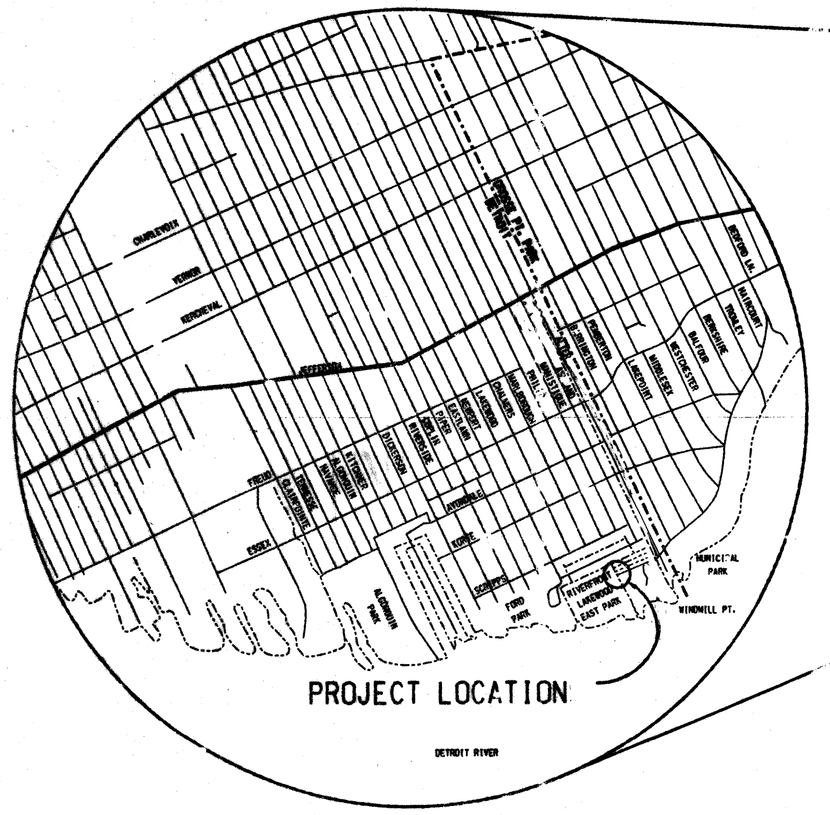

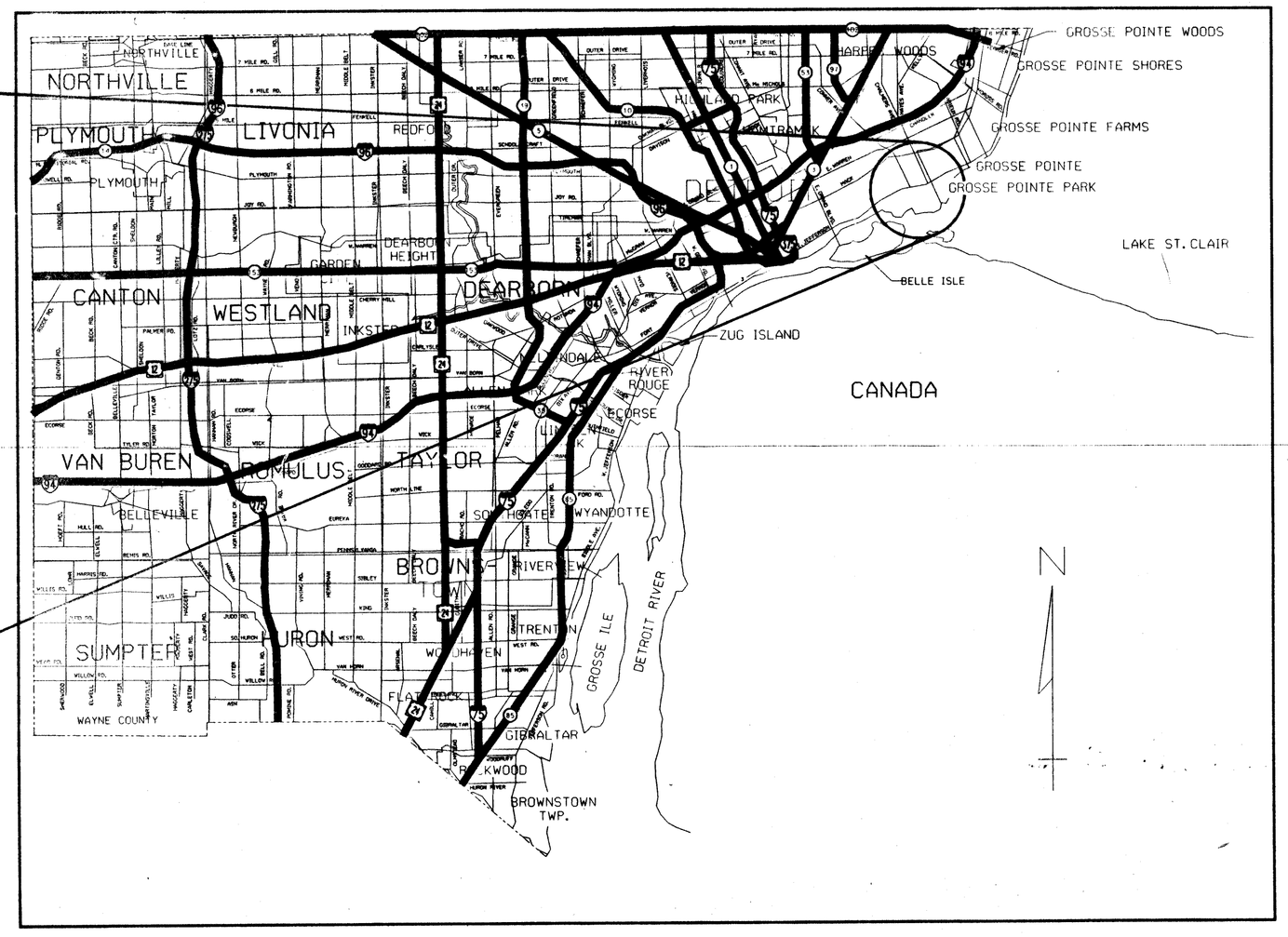

THE DESIGN OF THIS STRUCTURE IS BASED ON CURRENT AASHTO STANDARD SPECIFICATIONS FOR HIGHWAY BRIDGES MS18 LOADING. LIVE LOAD PLUS IMPACT DEFLECTION DOES NOT EXCEED 1/1000 OF THE SPAN LENGTH. THE LOAD FACTOR METHOD OF DESIGN WAS USED FOR THIS STRUCTURE.

EXCEPT WHERE OTHERWISE INDICATED ON THESE PLANS, THE PROPOSAL, AND SUPPLEMENTAL SPECIFICATIONS CONTAINED HEREIN, ALL MATERIALS AND WORKMANSHIP SHALL BE IN ACCORDANCE WITH THE MICHIGAN DEPARTMENT OF TRANSPORTATION STANDARD SPECIFICATIONS FOR CONSTRUCTION 1996 EDITION.

THE STATIONING AS SHOWN ON THESE PLANS FOR THE INTERSECTION OF THE CENTERLINE OF BRIDGE AND ROADWAY CENTERLINE IS BELIEVED TO BE CORRECT. IT SHALL, HOWEVER, BE CHECKED AT THE TIME OF STARTING CONSTRUCTION, AND IF THE STATIONING SHOWN ON THE PLANS IS INCORRECT IT SHALL BE REPORTED TO THE DESIGN OFFICE IN DETROIT, AND THE STRUCTURE SHALL BE STAKED OUT USING THE ACTUAL INTERSECTION OF THE CENTERLINE OF THE BRIDGE AND ROADWAY CENTERLINE AS THE CONTROL POINT.

ALL EXPOSED CONCRETE CORNERS SHOWN SQUARE ON THE PLANS SHALL BE BEVELED WITH 13 mm TRIANGULAR MOLDINGS EXCEPT AS OTHERWISE NOTED.

THE DESIGN OF THE STRUCTURAL MEMBERS IS BASED ON MATERIAL OF THE FOLLOWING GRADES AND STRESSES.

CONCRETE:	GRADE S2	f'c = 21 MPa
CONCRETE:	GRADE D	f'c = 28 MPa
STEEL REINFORCEMENT:		fy = 400 MPa

ALL DIMENSIONS ON THESE PLANS ARE IN MILLIMETERS EXCEPT AS NOTED.

PROJECT: REMOVAL AND REPLACEMENT OF THE STRUCTURES AT RIVERSIDE AVE. OVER CANAL IN THE CITY OF DETROIT.

CONTRACT NO. PW-6869R

PLANS PREPARED BY SNELL ENVIRONMENTAL GROUP, INC. FOR CITY ENGINEERING DIVISION

STATE OF MICHIGAN — RONALD G. WOOLF — 23345 — LICENSED PROFESSIONAL ENGINEER

RECOMMENDED FOR APPROVAL	STRUCTURAL ENGINEER	12-16-99 DATE
RECOMMENDED FOR APPROVAL	BUILDINGS AND BRIDGES ENGINEER	12/16/99 DATE
APPROVED	HEAD ENGINEER	12/15/99 DATE
APPROVED	CITY ENGINEER	12/15/99 DATE

METRIC

DIMENSIONS ARE IN MILLIMETERS UNLESS OTHERWISE SHOWN. ELEVATIONS, COORDINATES, CURVE AND ALIGNMENT DATA ARE IN METERS. STATIONS ARE IN KILOMETERS + METERS.

REVISIONS			
	DSGN BY	M.A.M.	5-97
	DR'N BY	R.J.D.	5-97
	CK'D BY	R.G.W.	5-97
	FINAL CK'D BY	M.D.W.	2-99
	APP'D BY		

SNELL ENVIRONMENTAL GROUP, INC. A DLZ Company, 151 W. CONGRESS, SUITE 328, DETROIT, MICHIGAN 48226, TELEPHONE (313) 961-4040

DETROIT — Making it better for you

CITY OF DETROIT MICHIGAN

RIVERSIDE AVE. OVER CANAL (BW-242)

TITLE SHEET

DATE	DRWG. NO.

SCALE NOT TO SCALE

PROJECT NO. 9641-5160-01

SHEET NO. 1 OF 8

FILE NAME: TITLEOT.DGN

h:\9641516001\bridge\final\title Feb. 2, 1999 14:13:57

UTILITIES

ELECTRIC
DETROIT EDISON
2000 SECOND AVE.
ROOM 607 G.O., DETROIT, MICHIGAN 48226
ATTN.: JOHN SQUIRES
PHONE No.: (313) 235-6597

TELEPHONE
AMERITECH
4000 ALLEN RD., ROOM 101
ALLEN PARK, MICHIGAN 48101
ATTN.: DAVE BUCIENSKI
PHONE No.: (313) 389-9819

GAS
MICHIGAN CONSOLIDATED GAS CO.
DRAFTING CLERK
MAIN REPLACEMENT TEAM
NOBLE SECOND FLOOR
3200 HOBSON
DETROIT, MICHIGAN 48201
PHONE No.: (313) 577-7236

WATER & SEWAGE
CITY OF DETROIT WATER & SEWERAGE DEPARTMENT
735 RANDOLPH ST.
DETROIT, MICHIGAN 48226
PHONE No.: (313) 224-4800

LIGHTING
CITY OF DETROIT PUBLIC LIGHTING DEPARTMENT.
9449 GRINNEL
DETROIT, MICHIGAN 48226
PHONE No.: (313) 267-7336

EXISTING STRUCTURE

ONE - SPAN REINFORCED CONCRETE ARCH STRUCTURE MEASURING 12.80 METERS REFERENCE LINE TO REFERENCE LINE. BUILT IN 1909. 9144 mm CLEAR ROADWAY.

BENCH MARK

B.M. #62-258 ELEV. 175.773
MONUMENT BOX IN SIDEWALK, NORTHEAST QUADRANT OF JEFFERSON AVE. AND CHALMERS

B.M. #62-255A ELEV. 174.776
MONUMENT BOX IN SIDEWALK, NORTHEAST QUADRANT OF FREUD AND CHALMERS

PROPOSED REPLACEMENT RIVERSIDE AVE. BRIDGE
MDOT - B01 OF 1038
CITY - BW-242

EXISTING STRUCTURE TO BE REMOVED

STA 9+975 TO STA 9+989
REMOVE 15 m CURB
STA 9+975 TO STA 9+993.243
PLACE 20 m TYPE IIIR, INTEGRAL CURB

DRIVEWAYS TO BE PAVED TO PROVIDE A SMOOTH TRANSITION BETWEEN PROPOSED PAVEMENT AND EXISTING DRIVEWAY AS DIRECTED BY ENGINEER. INCLUDED IN PAY ITEM "CONCRETE PAVEMENT".

STA 10+010 TO STA 10+019
REMOVE 10 m CURB
STA 10+006.756 TO STA 10+019
PLACE 13 m TYPE IIIR, INTEGRAL CURB

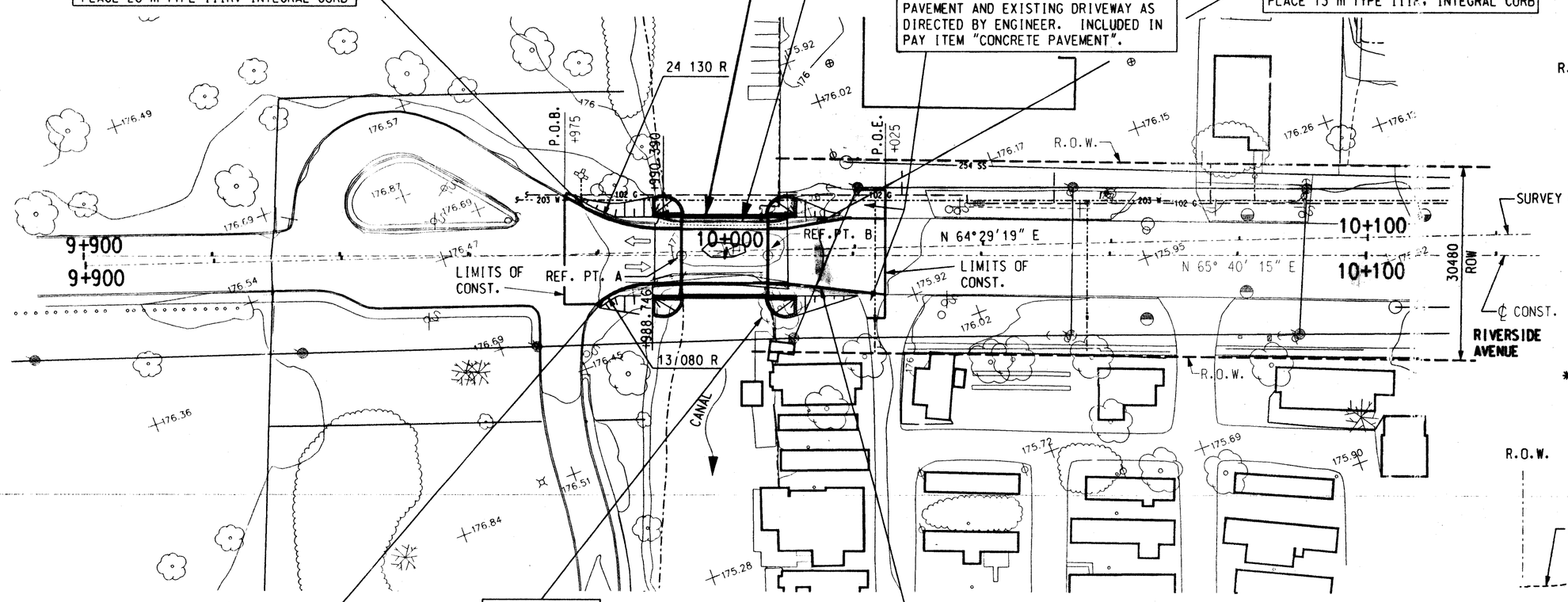

STA 9+980 TO STA 9+989
REMOVE 10 m CURB
STA 9+980 TO STA 9+993.243
PLACE 14 m TYPE IIIR, INTEGRAL CURB

REMOVE TREE, 451 TO 900 mm

STA 10+010 TO STA 10+021
REMOVE 11 m CURB
STA 10+006.756 TO STA 10+021
PLACE 14 m TYPE IIIR, INTEGRAL CURB

PLAN OF SITE

SCALE 1:500
CONTOUR 0.50 m

WITNESSES

WITNESS TO SURVEY ℄ STA. 9+900		(MAG NAIL)
N 60° W	N & S IN W. SIDE 254 mm LOCUST	10.766 m
N 20° W	N & S IN W. SIDE 203 mm LOCUST	9.372 m
S 10° W	N & S IN E. SIDE POWER POLE	16.278 m
WITNESS TO SURVEY ℄ STA. 10+100		(PK SET)
N 70 W	N & S IN S. SIDE 762 mm MAPLE	11.950 m
S 80° E	N & S IN N. SIDE POWER POLE	33.000 m
N 15° W	N & S IN E. SIDE POWER POLE	18.530 m

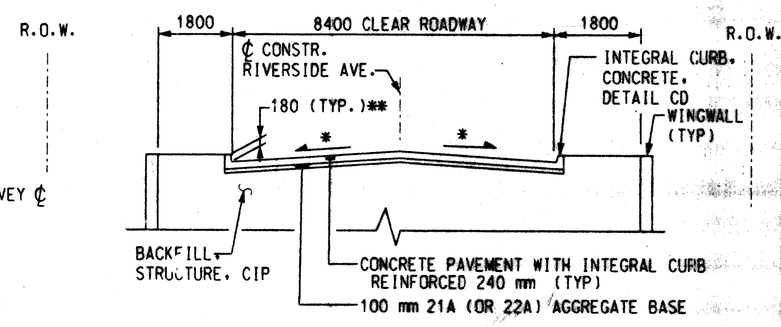

TYPICAL APPROACH SECTION

STA. 9+989.408 TO STA. 9+993.243 &
STA. 10+006.756 TO STA. 10+011.054

** FEATHER APPROACH CURB ELEV. TO BRIDGE CURB ELEV.

* TRANSITION FROM 0% AT BRIDGE TO MATCH EXISTING CROSS SLOPE AT APPROACHES

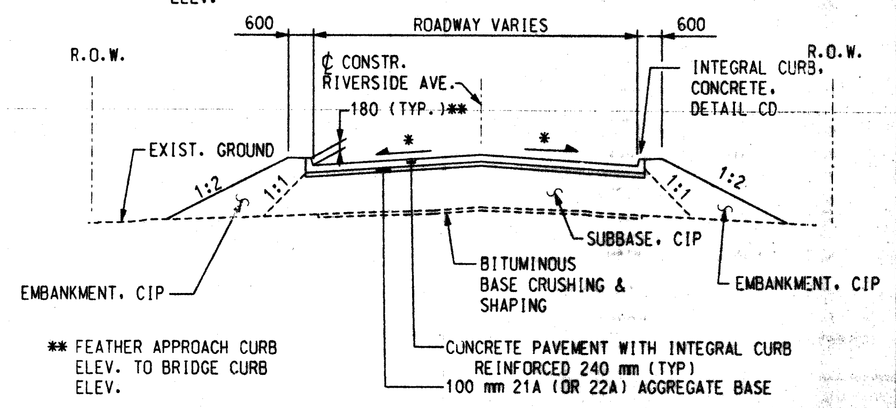

** FEATHER APPROACH CURB ELEV. TO BRIDGE CURB ELEV.

TYPICAL APPROACH SECTION

STA. 9+975.000 TO STA. 9+989.408 &
STA. 10+011.054 TO STA. 10+025.000

* TRANSITION FROM 0% AT BRIDGE TO MATCH EXISTING CROSS SLOPE AT APPROACHES

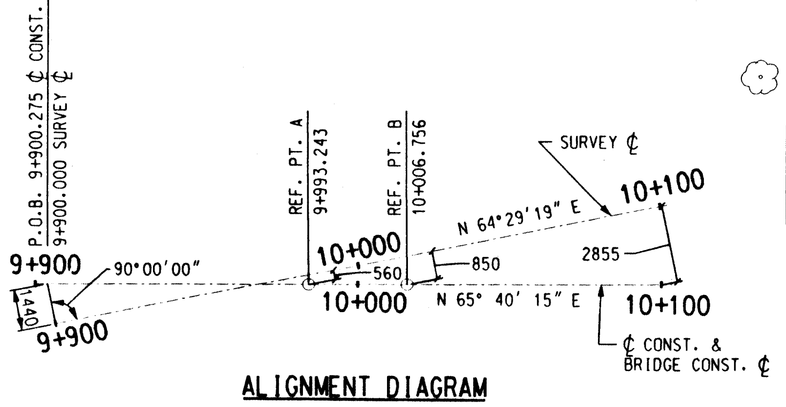

ALIGNMENT DIAGRAM

VPI STA. = 9+980.000
EL. = 176.565
CURVE LEN. = 10.000
K = 0.96
E = -0.131
G_1 = (+)0.80 %
G_2 = (+)11.25%

VPI STA. = 10+000.000
EL. = 178.815
CURVE LEN. = 20.000
K = 0.95
E = -0.582
G_1 = (+)11.25%
G_2 = (-)12.04%

VPI STA. = 10+020.000
EL. = 176.408
CURVE LEN. = 10.000
K = 0.96
E = -0.130
G_1 = (-)12.04%
G_2 = (-)1.67 %

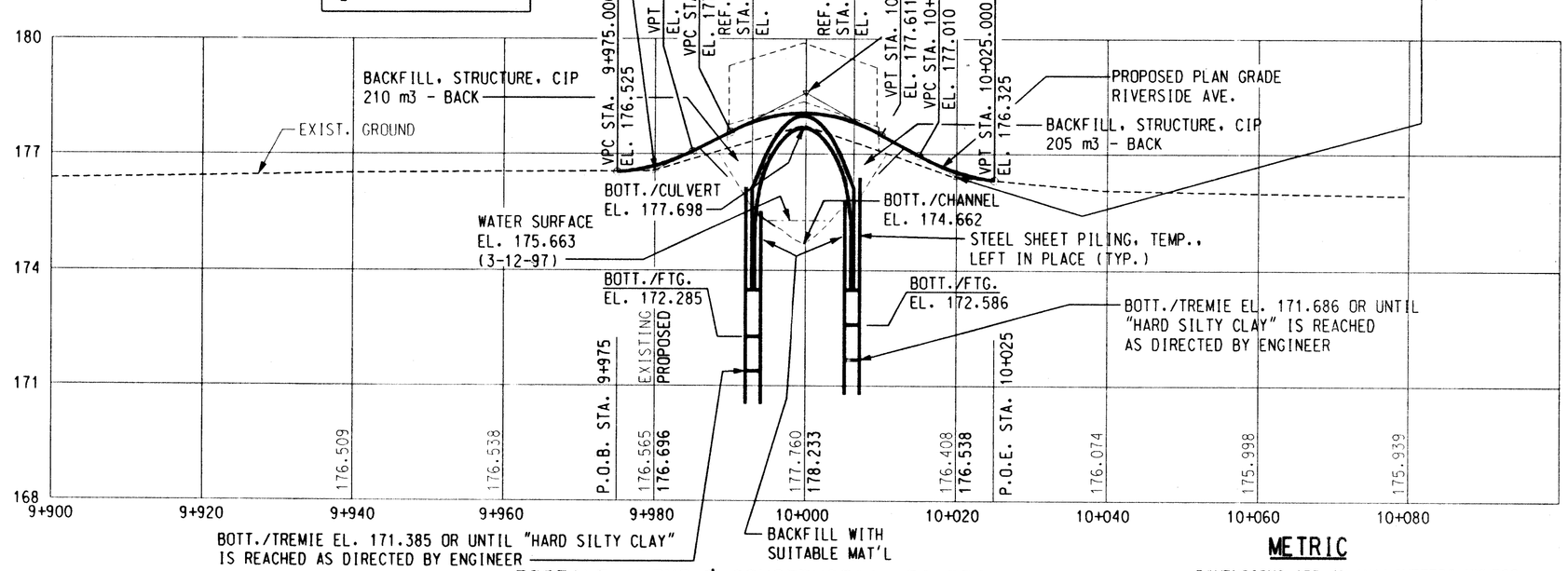

PROFILE ALONG ℄ CONSTRUCTION RIVERSIDE AVE.

VERT. SCALE 1:100
HORIZ. SCALE 1:500

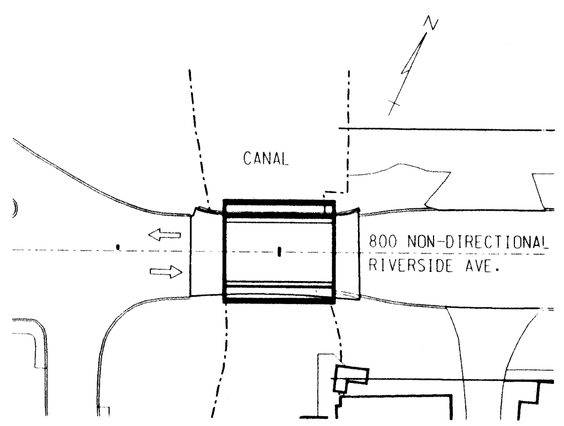

2009 ESTIMATED TRAFFIC DISTRIBUTION

000 AVERAGE DAILY TRAFFIC
⇨ DIRECTIONAL TRAFFIC

METRIC

DIMENSIONS ARE IN MILLIMETERS UNLESS OTHERWISE SHOWN. ELEVATIONS, COORDINATES, CURVE AND ALIGNMENT DATA ARE IN METERS. STATIONS ARE IN KILOMETERS + METERS.

NOTES:

THE WORK COVERED BY THESE PLANS INCLUDES REMOVAL OF EXISTING BRIDGE, CONSTRUCTION OF THE PROPOSED BRIDGE, PLACING RIPRAP AND APPROACH WORK.

THE CONTRACTOR SHALL LOCATE ALL ACTIVE UNDERGROUND UTILITIES PRIOR TO STARTING WORK AND SHALL CONDUCT HIS OPERATIONS IN SUCH A MANNER AS TO ENSURE THAT THOSE UTILITIES NOT REQUIRING RELOCATION WILL NOT BE DISTURBED.

RIVERSIDE AVE. WILL BE CLOSED TO THRU TRAFFIC FOR THE PROJECT DURATION.

DATUM REFERS TO N.A.V.D. DATUM.

WATER LEVEL IS SUBJECT TO CHANGE. THE CONTRACTOR IS RESPONSIBLE FOR MAKING HIS OWN DETERMINATION OF WATER LEVELS THAT WILL EXIST DURING CONSTRUCTION.

MEASURES SHALL BE TAKEN TO PREVENT DEBRIS FROM FALLING FROM THE STRUCTURE. IF DEBRIS FALLS INTO THE WATERWAY, IT SHALL BE REMOVED WITHIN 24 HOURS. SINCE DISTURBANCE OF THE WATERWAY BOTTOM MAY BE AS HARMFUL AS THE DEBRIS ITSELF, THE PREVENTIVE MEASURES MUST BE MADE AS EFFECTIVE AS POSSIBLE. DEBRIS WHICH HAS PREVIOUSLY FALLEN FROM THE BRIDGE SHALL ALSO BE REMOVED AS DIRECTED BY THE ENGINEER.

TEMPORARILY STORED EXCAVATED MATERIAL SHALL NOT BE ALLOWED TO ERODE INTO THE WATERCOURSE.

PRIOR TO PLACEMENT OF THE TREMIE SEAL, WATER PUMPED FROM THE "TEMPORARY STEEL SHEET PILING, TEMP, LEFT IN PLACE" SHALL BE DISCHARGED INTO A GEOTEXTILE FILTER BAG. AFTER TREMIE SEAL PLACEMENT, AND WHERE PERMITTED BY THE ENGINEER, PUMPS MAY OUTLET DIRECTLY INTO THE RIVER.

ALL DISTURBED EXISTING GROUND AND ANY NEW FILL SLOPES SHALL BE SEEDED, FERTILIZED, AND MULCHED AS DIRECTED BY THE ENGINEER. TO BE INCLUDED IN THE PAY ITEMS "SEEDING, MIXTURE TUF," "FERTILIZER, CHEMICAL NUTRIENT, CLASS A," AND "MULCH BLANKET."

REVISIONS			
DSGN BY	C.D.P.	12-97	
DR'N BY	R.J.D.	5-97	
CK'D BY	R.G.W.	5-97	
FINAL CK'D BY	M.D.W.	2-99	
APP'D BY			

SNELL ENVIRONMENTAL GROUP, INC. A DLZ Company
151 W. CONGRESS, SUITE 328
DETROIT, MICHIGAN 48226
TELEPHONE (313) 961-4040

DETROIT — Making it better for you

CITY OF DETROIT
MICHIGAN

RIVERSIDE AVE.
OVER CANAL
(BW-242)

GENERAL PLAN OF SITE

SCALE NOT TO SCALE
PROJECT NO. 9641-5160-01
SHEET NO. R2 OF 8

FILE NAME: 02SITE.DGN

h:\96415160.01\bridge\final\02site Feb 2, 1999 13:57:14

TEST HOLE TB-#R-1

LOCATION STATION 9+986.350 6939 LT.
RIVERSIDE AVE. OVER CANAL
ELEV. GROUND SURFACE ELEVATION 176.567

ESTIMATED TOTAL SCOUR LIMIT ABUT. A
EL. 176.000 +/-

ELEV.		
176.567		FILL - Mixed loose silty fine sand, clayey fine sand and silty clay, with gravel, trace roots, organics and brick pieces, dark brown (SC)
176.037	3 1	(Driller reported concrete, brick and wire)
175.348 / 175.272	1 1	Very loose SILTY FINE TO MEDIUM SAND, with frequent seams and pockets of organic silt, trace gravel, roots, organics and shell fragments, black and gray, wet (SM)
174.510	1 1	
173.748	2 1	
172.909		Loose layered CLAYEY SILT and SILTY FINE SAND, trace gravel and shell fragments, gray, wet (ML) (SM)
172.224	2 2	BOTTOM OF FOOTING (FOOTING A) ELEV. 172.285
171.385		BOTTOM OF TREMIE (FOOTING A) ELEV. 171.385
170.700	14 16 16	Hard SILTY CLAY, with sand, trace gravel, mottled brown and gray (CL)
169.861		Stiff SILTY CLAY, some sand and gravel, mottled gray and brown changing to gray below ELEV. 168.337 (CL)
169.176	4 6 7	
167.652	4 6 6	
166.813		Stiff SANDY CLAY, with silt, trace gravel, gray (CL/SC)
166.128	5 7 7	
165.289		Stiff SILTY CLAY, some sand and gravel, gray (CL)
164.604	4 5 6	
163.765		Soft to medium SILTY CLAY, some sand, trace gravel, gray (CL)
163.080	3 3 3	
161.556	3 3 3	
160.032	2 4 5	

CONTINUED

CONTINUED

ELEV.		
158.508	3 4 4	
156.984	3 4 4	
155.460	3 4 4	
153.936	4 4 4	
152.412	3 4 5	Soft to medium SILTY CLAY, some sand, trace gravel, with occasional silt partings and pockets below ELEV. 150.659, gray (CL)
150.888	4 5 5	
149.364	4 4 4	
147.840	4 5 6	
146.316	4 4 5	
145.477		Stiff SILTY CLAY, trace sand, gray (CL/ML)
144.792	6 10 13	
144.106		Very stiff SILTY CLAY and dense CLAYEY SILT, some sand, trace gravel, gray (CL/ML)
143.268	10 16 28	
141.881	50/127	Limestone fragments, dark gray
141.820		Bottom of Boring - 34.747 m

NOTE:
WATER FIRST ENCOUNTERED AT ELEV. 175.043

BORING DATE 4/ 4/97

TEST HOLE TB-#R-2

LOCATION STATION 10+011.894 3242 LT.
RIVERSIDE AVE. OVER CANAL
ELEV. GROUND SURFACE ELEVATION 176.868

ESTIMATED TOTAL SCOUR LIMIT ABUT. B
EL. 176.000 +/-

ELEV.		
176.868 / 176.716		152 mm of ASPHALTIC CONCRETE
176.335	2 2 2	FILL - Very loose to loose silty fine sand and silty sand topsoil, some gravel, trace clay, roots, vegetation, organics, shell fragments, wood, paper and plastic pieces, brown and black, moist to wet (SM)
175.573	3 4 4	
175.192		Loose SILTY FINE TO COARSE SAND, some gravel, trace organics, brown and gray, wet (SM)
174.811	2 4 4	
174.430		Loose FINE TO MEDIUM SAND, trace gravel and organics, with occasional silt seams, gray, wet (SP)
174.049	3 3 3	
173.210		Loose SILTY FINE SAND, with clay, trace gravel and organics, with frequent clay seams, gray, wet (SM)
172.525	1 2 2	BOTTOM OF FOOTING (FOOTING B) ELEV. 172.586
171.686		BOTTOM OF TREMIE (FOOTING B) ELEV. 171.686
171.001	7 13 13	Hard SILTY CLAY, with sand, trace gravel, mottled brown and gray (CL)
170.162		Very stiff SILTY SANDY CLAY, some gravel, with frequent sand seams, gray (CL)
169.477	7 11 15	
167.953	7 11 12	
166.810		
166.429	6 6 5	Stiff to medium SILTY CLAY, with sand, trace gravel, gray (CL)
164.905	3 6 8	
164.676		Bottom of Boring - 12.192 m.

NOTE:
WATER FIRST ENCOUNTERED AT ELEV. 175.649

BORING DATE 4/ 4/97

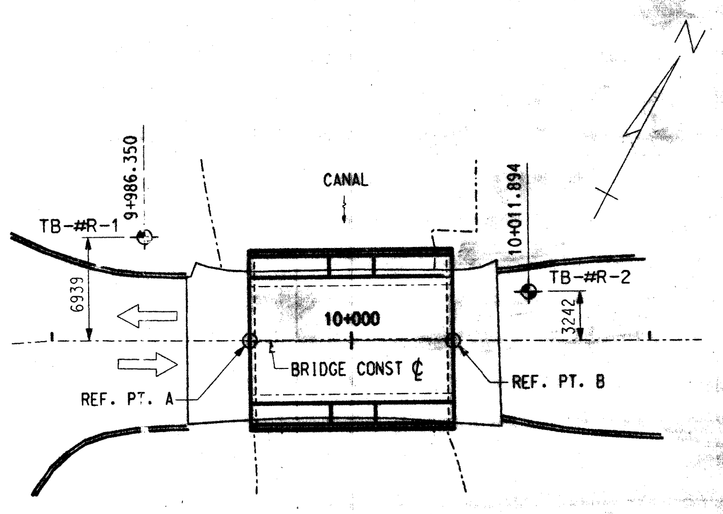

PLAN
SCALE: NTS

NOTES:

NUMBERS IN CIRCLES DENOTE NUMBER OF BLOWS REQUIRED TO DRIVE A 50.8 mm SPLIT SPOON SAMPLER 3 SUCCESSIVE 0.15 m INCREMENTS USING A 63.5 kg HAMMER FALLING 0.76 m. WHERE THE SAMPLER IS DRIVEN DISTANCES OTHER THAN THE 0.15 m INCREMENT, THE DISTANCE IS SHOWN IN PARENTHESIS TO THE RIGHT OF THE NUMBER OF BLOWS.

(X X X) NUMBER OF BLOWS PER 0.15 m
NUMBER OF BLOWS PER 0.15 m
NUMBER OF BLOWS PER 0.15 m

(X X X) NUMBER OF BLOWS PER 0.15 m
NUMBER OF BLOWS PER 0.15 m
XX(XX) NUMBER OF BLOWS PER DISTANCE (mm)

XX(XX) NUMBER OF BLOWS PER DISTANCE (mm)

CONSISTENCY WAS DETERMINED BY INSPECTION OF SAMPLES AND SUBSTANTIATED BY SOILS RESISTANCE TO DRILLING TOOLS.

WATER LEVELS MAY BE INFLUENCED BY RESIDUAL BORING WATER.

THE SOIL BORING LOGS REPRESENT POINT INFORMATION. PRESENTATION OF THIS INFORMATION IN NO WAY IMPLIES THAT SUBSURFACE CONDITIONS ARE THE SAME AT LOCATIONS OTHER THAN THE EXACT LOCATION OF THE BORING.

SOIL BORINGS WERE PERFORMED ON DATES SHOWN BELOW BORING.

BY: SOMAT ENGINEERING, INC.
26445 Northline Rd
Taylor, Michigan 48180
PHONE: (313) 946-4966

METRIC

DIMENSIONS ARE IN MILLIMETERS UNLESS OTHERWISE SHOWN. ELEVATIONS, COORDINATES, CURVE AND ALIGNMENT DATA ARE IN METERS. STATIONS ARE IN KILOMETERS + METERS.

REVISIONS			
DSGN BY	C.D.P.	12-97
DR'N BY	R.J.D.	4-97
CK'D BY	R.G.W.	5-97
FINAL CK'D BY	M.D.W.	2-99
APP'D BY		

SEG
SNELL ENVIRONMENTAL GROUP, INC. A DLZ Company
151 W. CONGRESS, SUITE 328
DETROIT, MICHIGAN 48226
TELEPHONE (313) 961-4040

DETROIT Making it better for you

CITY OF DETROIT
MICHIGAN

RIVERSIDE AVE.
OVER CANAL
(BW-242)

LOG OF BORINGS

SCALE NOT TO SCALE
PROJECT NO. 9641-5160-01
SHEET NO. R3 OF 8

FILE NAME: 02BORING.DGN

h:\96415160.01\bridge\final\02bori Feb. 2, 1999 14:07:04

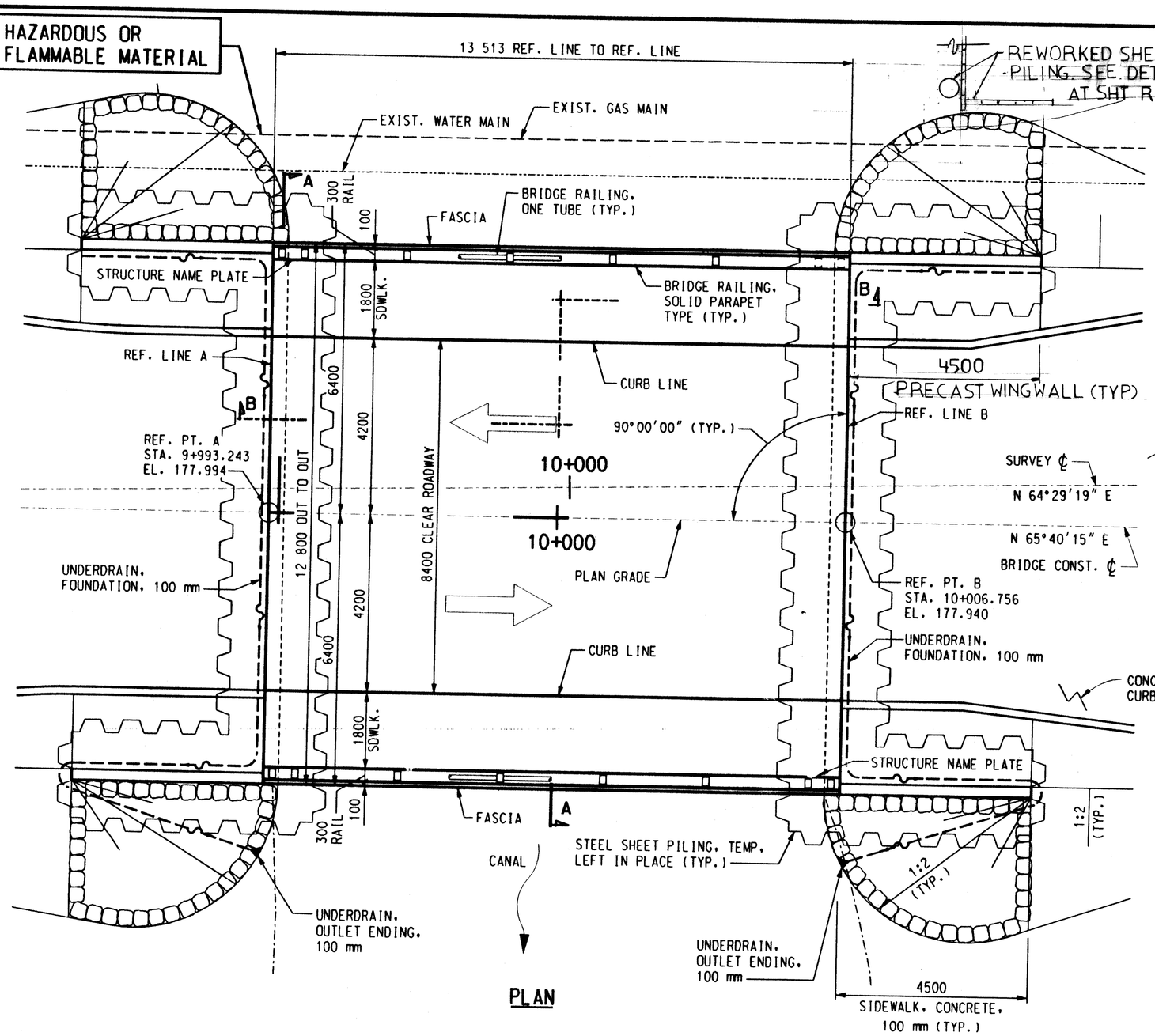

PLAN

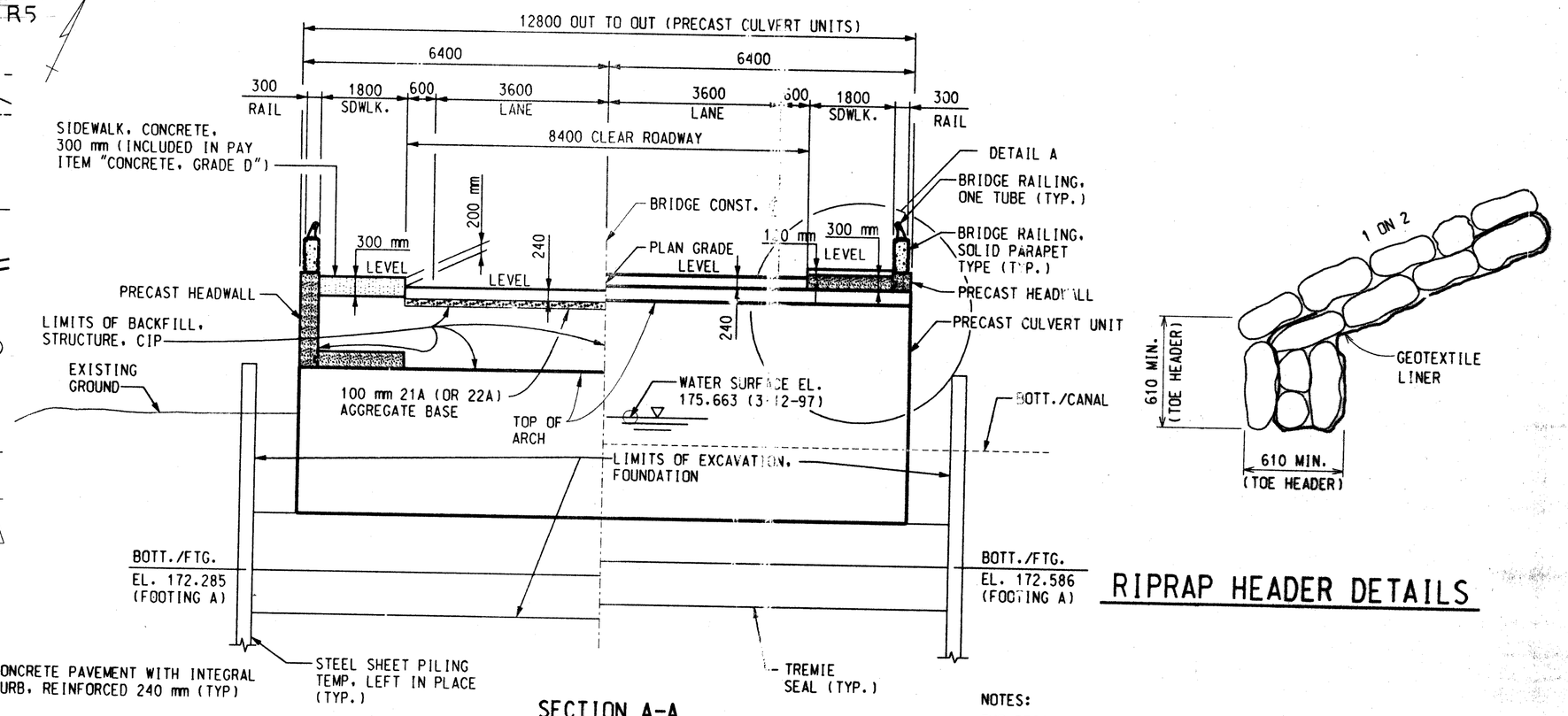

SECTION A-A

RIPRAP HEADER DETAILS

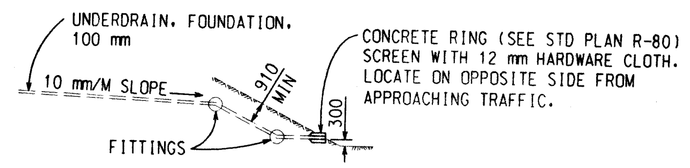

DETAIL FOR UNDERDRAIN DRAINAGE

NOTES:

THE DESIGN OF THIS STRUCTURE IS BASED ON CURRENT AASHTO STANDARD SPECIFICATIONS FOR HIGHWAY BRIDGES MS18 LOADING. LIVE LOAD PLUS IMPACT DEFLECTION DOES NOT EXCEED 1/1000 OF SPAN LENGTH. THE LOAD FACTOR METHOD OF DESIGN WAS USED FOR THIS STRUCTURE.

THE TOP OF THE ROADWAY AND TOPS OF SIDEWALKS ARE PARALLEL TO THE VERTICAL CURVE.

DEWATERING SHALL BE INCLUDED IN THE PAY ITEM "STEEL SHEET PILING, TEMP. LEFT IN PLACE".

RIPRAP, HEAVY TO BE PLACED ON SLOPES AT ALL FOUR QUADRANTS. NO BROKEN CONCRETE SHALL BE PLACED AS RIPRAP, HEAVY

PERIODIC ACCESS SHALL BE PROVIDED BY THE CONTRACTOR TO THE ISLAND (WEST SIDE OF THE BRIDGE) FOR THE CITY OF DETROIT PARKS AND RECREATION DEPARTMENT FOR MOWING.

REMOVAL OF STRUCTURE INCLUDES ANY DEBRIS IN CHANNEL AND THAT WHICH WAS PREVIOUSLY PART OF THE STRUCTURE. THIS WILL ALSO INCLUDE ANY PILING THAT CONFLICTS WITH PROPOSED STRUCTURE.

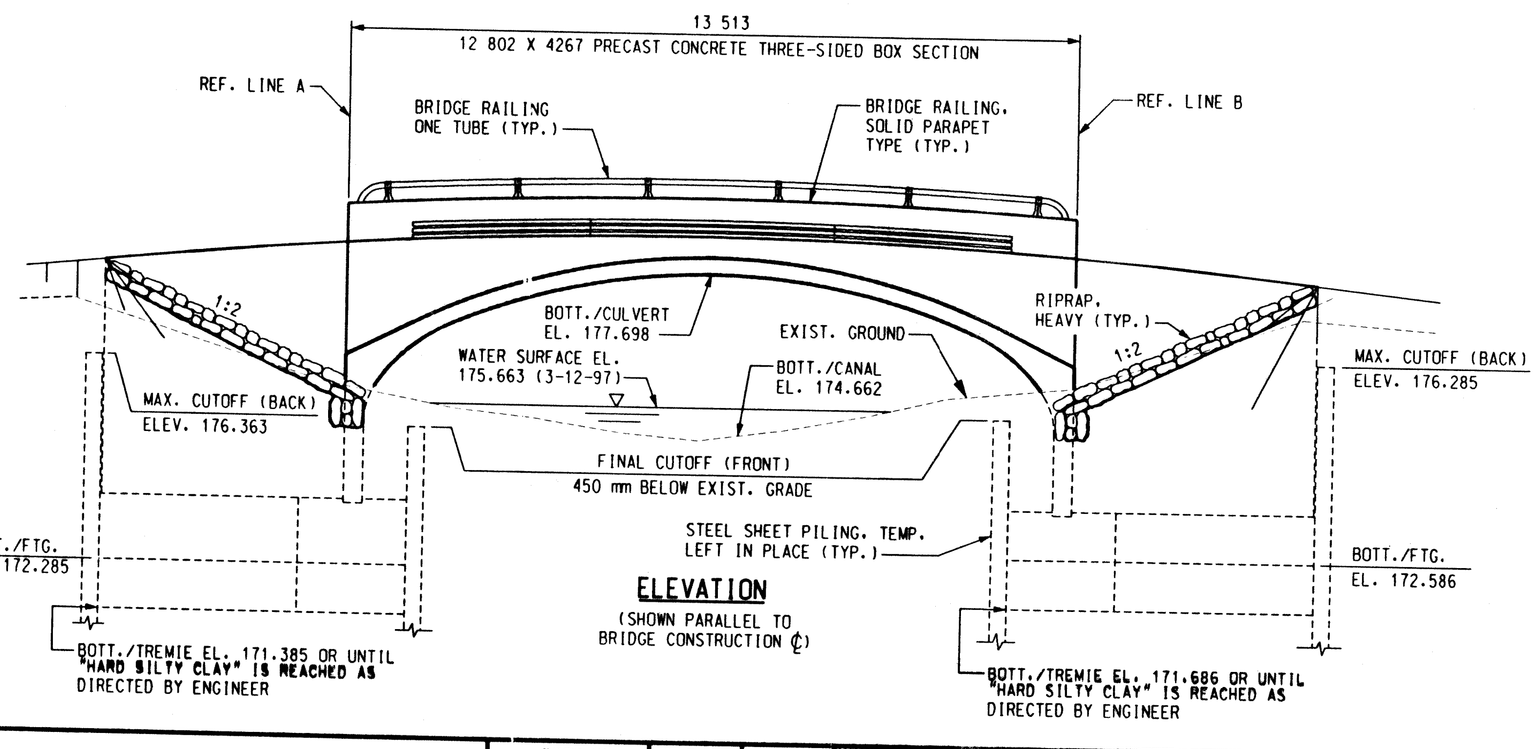

ELEVATION

(SHOWN PARALLEL TO BRIDGE CONSTRUCTION ℄)

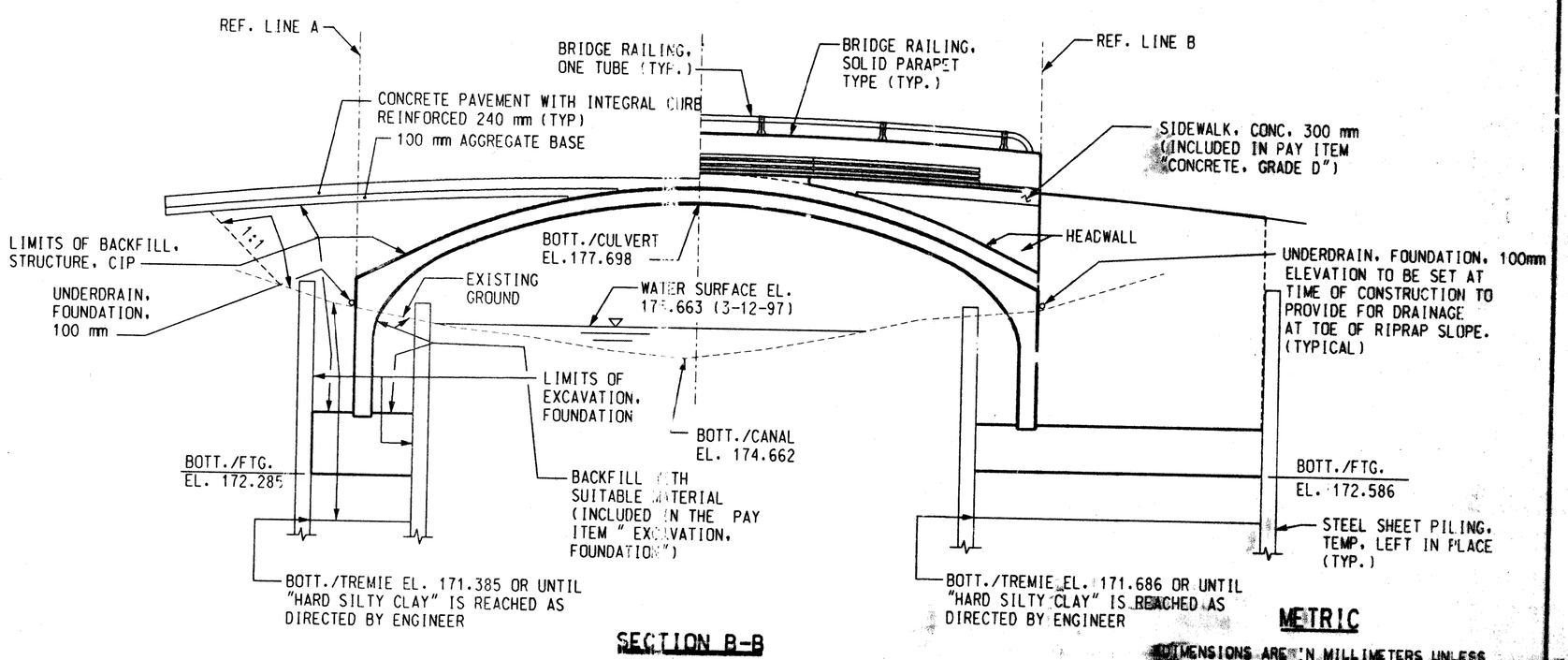

SECTION B-B

METRIC

DIMENSIONS ARE IN MILLIMETERS UNLESS OTHERWISE SHOWN. ELEVATIONS, COORDINATES, CURVE AND ALIGNMENT DATA ARE IN METERS. STATIONS ARE IN KILOMETERS + METERS.

REVISIONS				
	DSGN BY	C.D.P.	12-97	
	DR'N BY	R.J.D.	5-97	
	CK'D BY	R.G.W.	5-97	
	FINAL CK'D BY	M.D.W.	2-99	
	APP'D BY			

SNELL ENVIRONMENTAL GROUP, INC. A DLZ Company
151 W. CONGRESS, SUITE 328
DETROIT, MICHIGAN 48226
TELEPHONE (313) 961-4040

DETROIT — Making it better for you

CITY OF DETROIT
MICHIGAN

RIVERSIDE AVE.
OVER CANAL
(BW-242)

GENERAL
PLAN OF
STRUCTURE

SCALE NOT TO SCALE
PROJECT NO. 9641-5150-01
SHEET NO. R4 OF 8

FILE NAME: 010PSTR1.DGN

h:\96415150.01\bridge\final\04gpst Feb 2, 1999 14:08:39

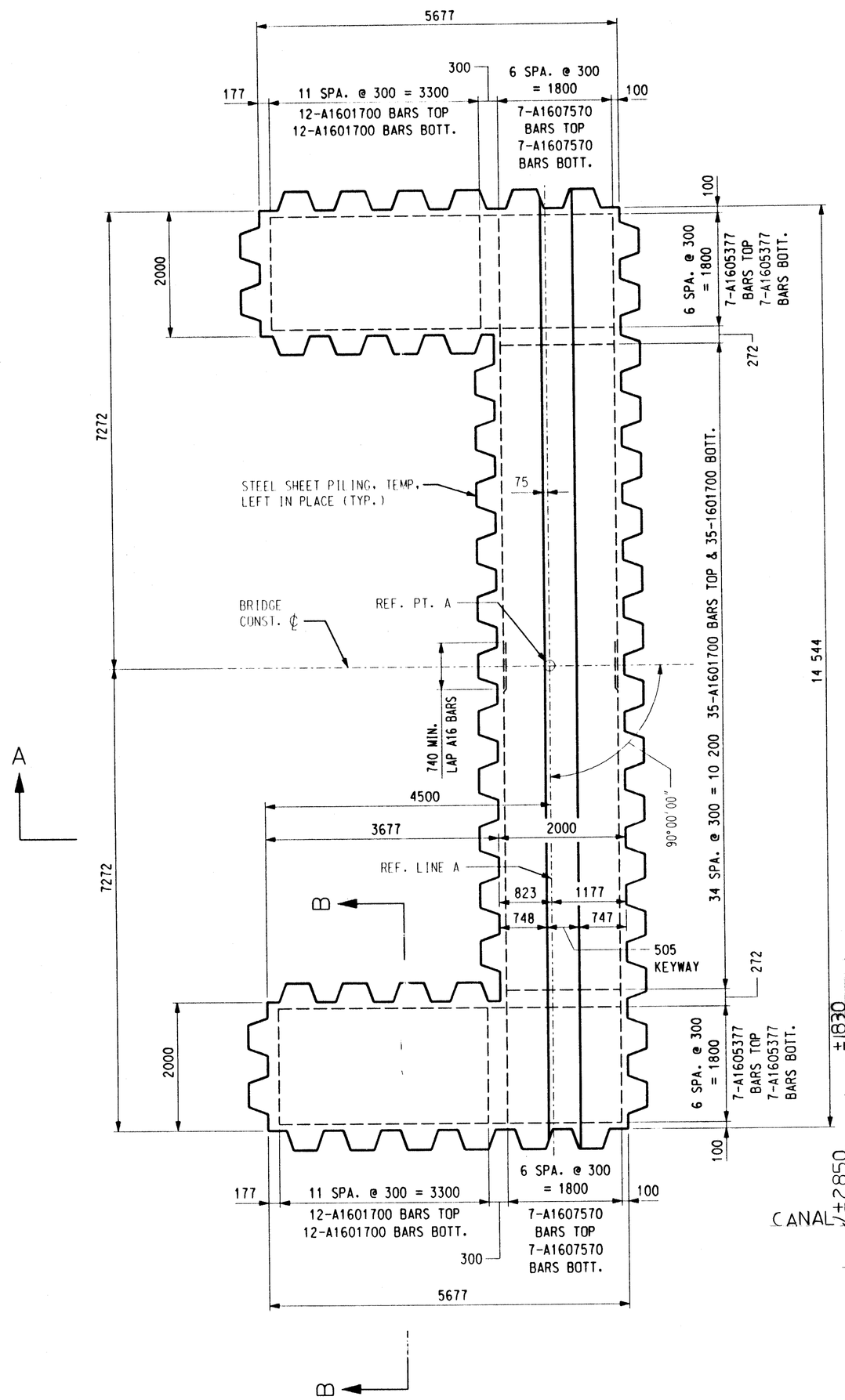

PLAN OF FOOTING LAYOUT

(ABUTMENT A SHOWN ABUTMENT B OPPOSITE HAND)

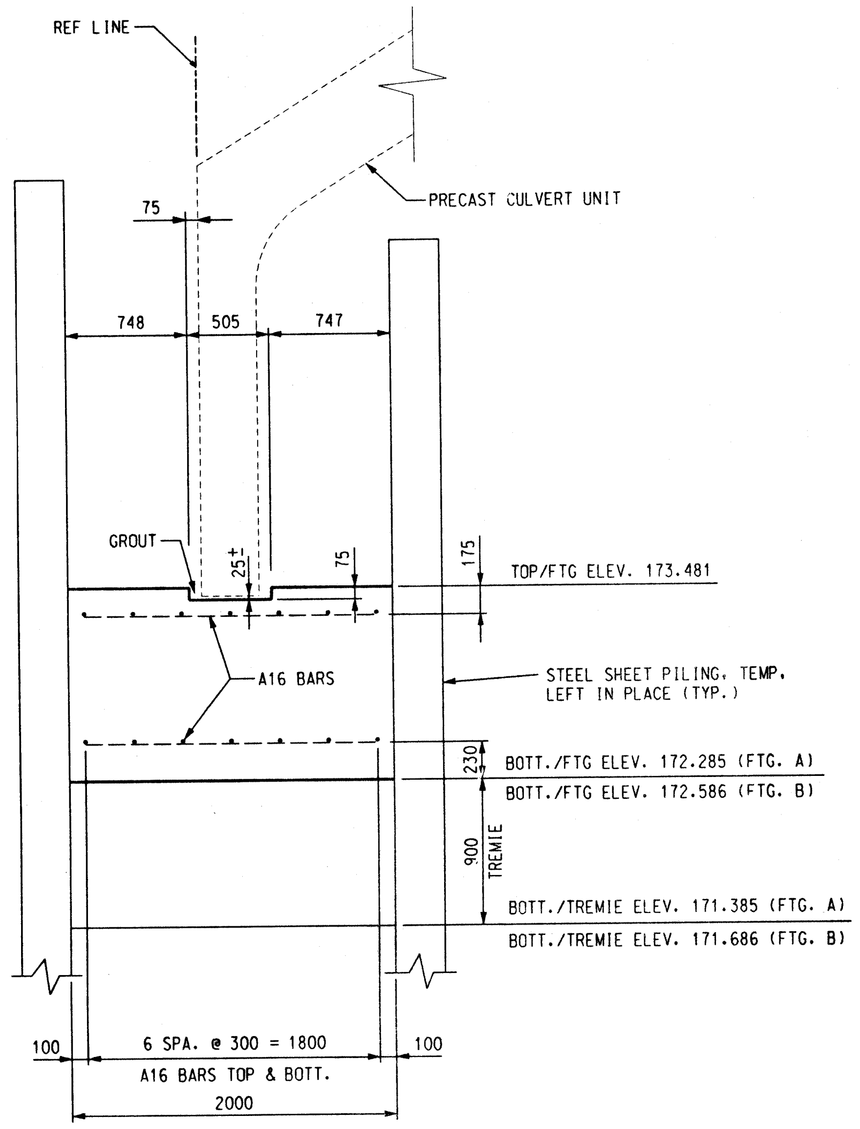

SECTION A-A

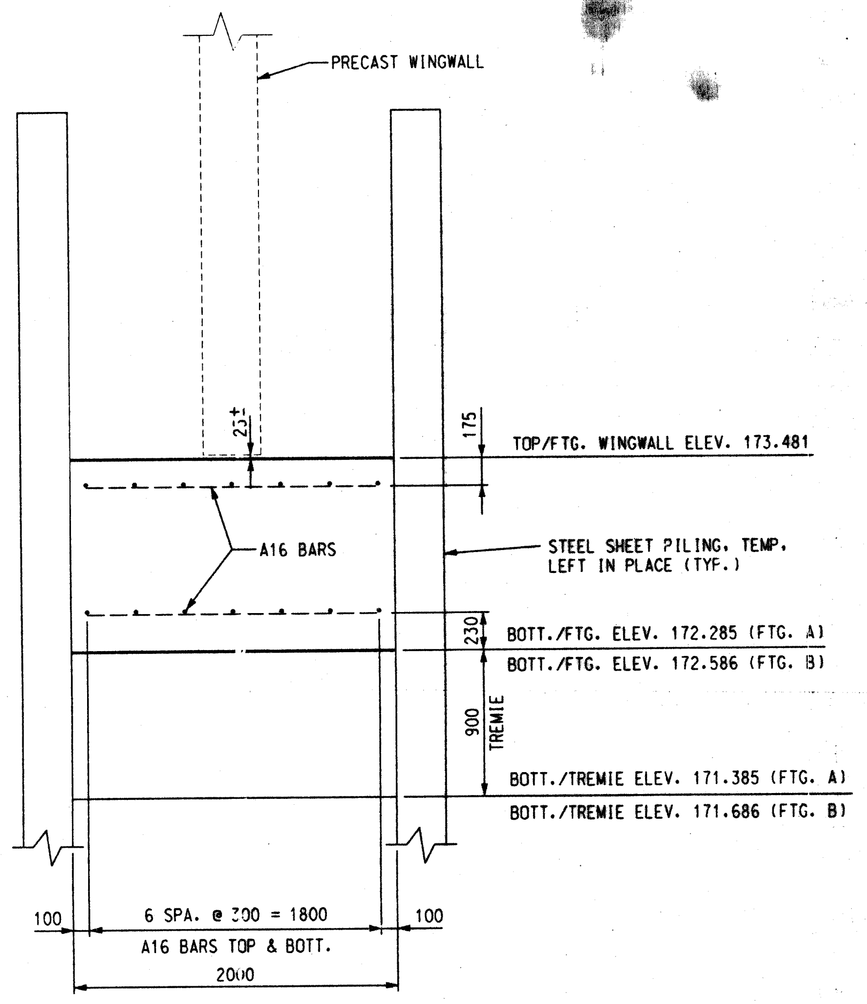

SECTION B-B

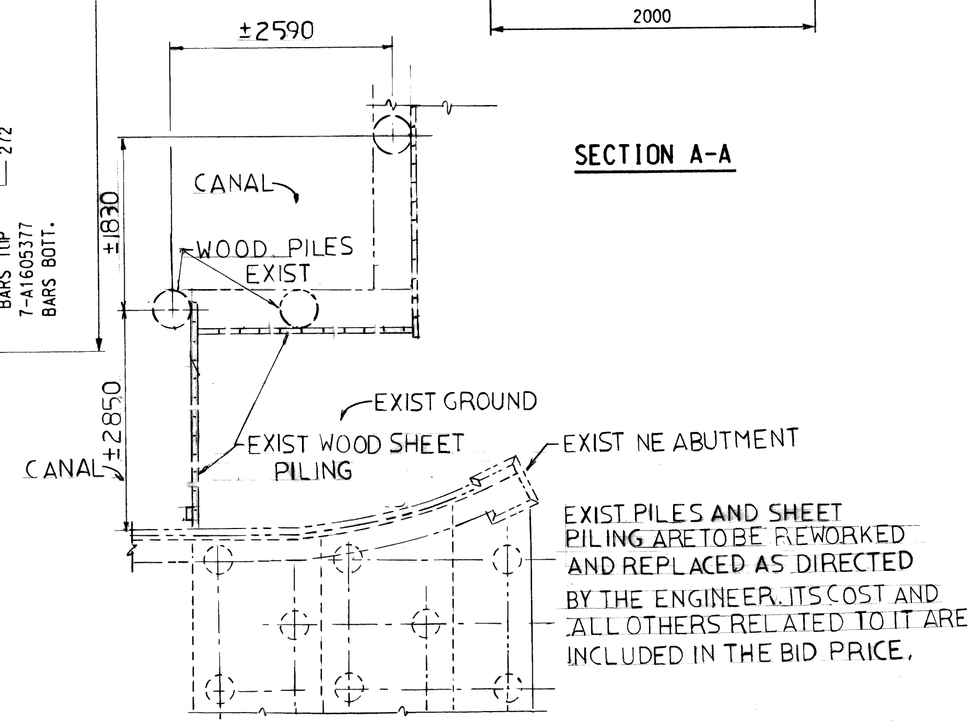

DETAIL A (EXIST)

NTS REF SHT R4

METRIC

DIMENSIONS ARE IN MILLIMETERS UNLESS OTHERWISE SHOWN. ELEVATIONS, COORDINATES, CURVE AND ALIGNMENT DATA ARE IN METERS. STATIONS ARE IN KILOMETERS + METERS.

REVISIONS				
	DSGN BY	C.D.P.	12-97	
	DR'N BY	R.J.D.	5-97	
	CK'D BY	R.G.W.	5-97	
	FINAL CK'D BY	M.D.W.	2-99	
	APP'D BY			

SNELL ENVIRONMENTAL GROUP, INC. A DLZ Company
151 W. CONGRESS, SUITE 328
DETROIT, MICHIGAN 48226
TELEPHONE (313) 961-4040

DETROIT Making it better for you

CITY OF DETROIT
MICHIGAN

RIVERSIDE AVE
OVER CANAL
(BW-242)

FOOTING DETAILS

SCALE NOT TO SCALE
PROJECT NO. 9641-5160-01
SHEET NO. R5 OF 8

FILE NAME: 05CAT501.DGN

h:\96415160.01\bridge\final\05ftg0 Feb. 2, 1999 14:15:29

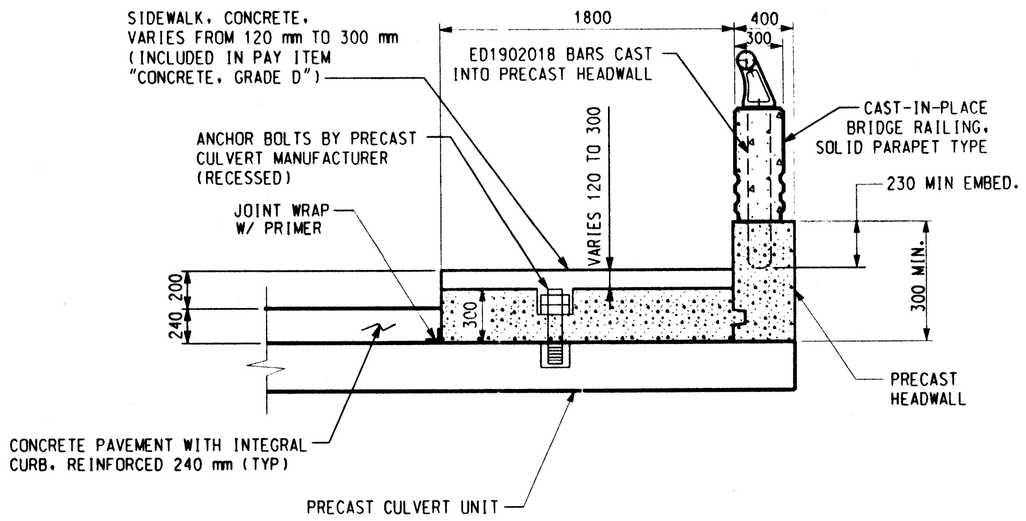

DETAIL A

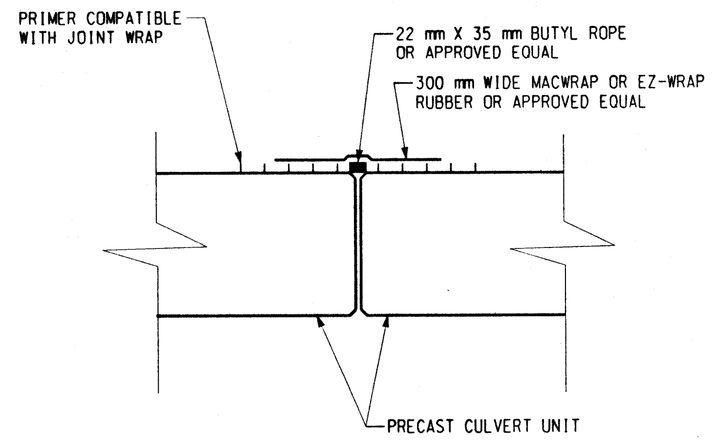

STANDARD JOINT DETAIL

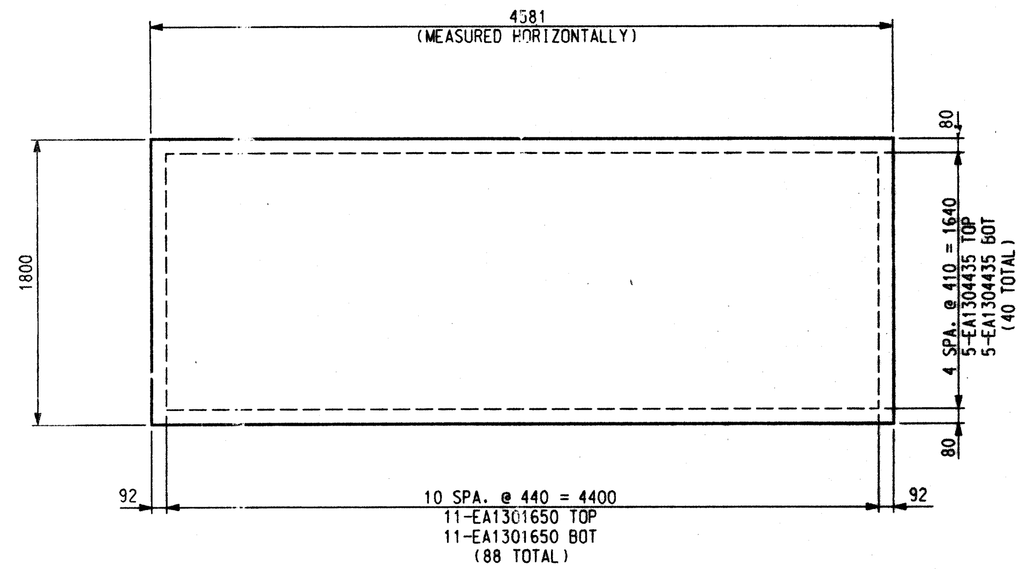

TYPICAL SIDEWALK, CONCRETE, 300 mm DETAIL

(TYPICAL ALL 4 QUADRANTS)

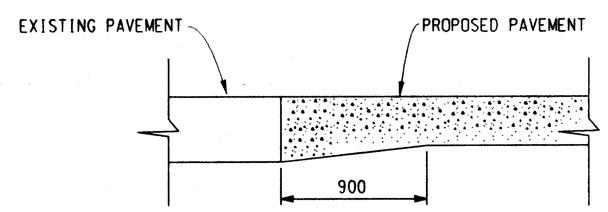

PROVIDE THIS THICKENED EDGE WHERE PROPOSED PAVEMENT MEETS EXIST. PAVEMENT

DETAIL OF THICKENED EDGE

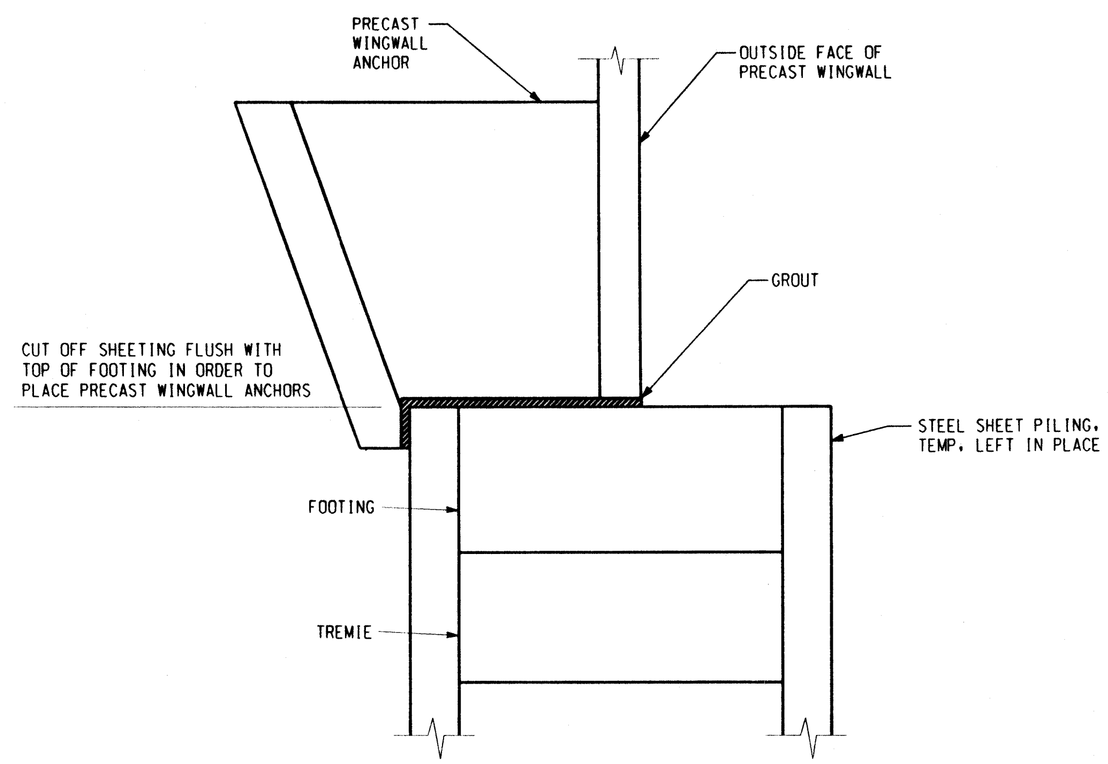

TYPICAL SECTION THRU PRECAST WINGWALL

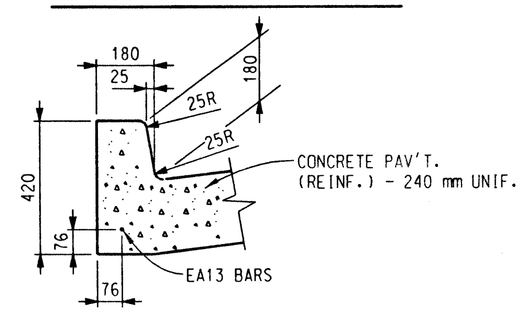

TYPE IIIR, INTEGRAL CURB

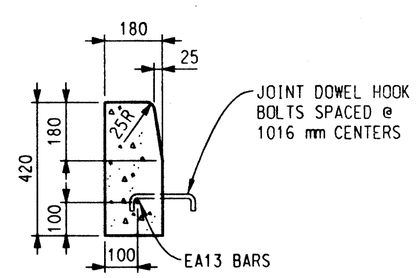

TYPE IIR, CONCRETE CURB

(OPTIONAL)

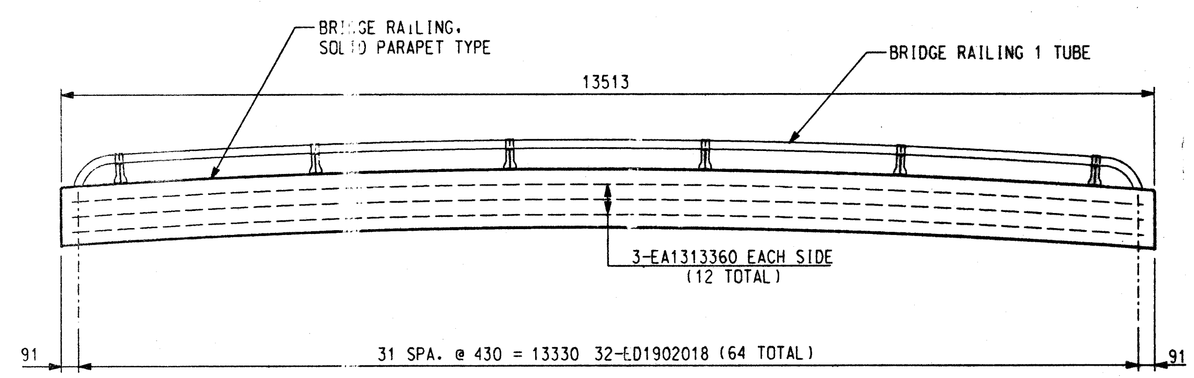

BRIDGE RAILING ELEVATION

NOTE:

DEWATERING SHALL BE INCLUDED IN PAY ITEM "STEEL SHEET PILING, TEMP. LEFT IN PLACE"

METRIC

DIMENSIONS ARE IN MILLIMETERS UNLESS OTHERWISE SHOWN. ELEVATIONS, COORDINATES, CURVE AND ALIGNMENT DATA ARE IN METERS. STATIONS ARE IN KILOMETERS + METERS.

REVISIONS			
	DSGN BY	C.D.P.	12-97
	DR'N BY	R.J.D.	5-97
	CK'D BY	R.G.W.	5-97
	FINAL CK'D BY	M.D.W.	2-99
	APP'D BY		

SNELL ENVIRONMENTAL GROUP, INC. A DLZ Company
151 W. CONGRESS, SUITE 328
DETROIT, MICHIGAN 48226
TELEPHONE (313) 961-4040

DETROIT Making it better for you

CITY OF DETROIT
MICHIGAN

RIVERSIDE AVE. OVER CANAL (BW-242)

MISCELLANEOUS DETAILS

SCALE NOT TO SCALE
PROJECT NO. 9641-5160-01
SHEET NO. R6 OF 8

FILE NAME: 06DET.DGN

h:\96415160.01\bridge\final\06det. Feb. 2, 1999 14:48:23

SPECIFICATIONS FOR MANUFACTURE AND INSTALLATION OF PRECAST CULVERT BRIDGE SYSTEMS

1. DESCRIPTION

This work shall consist of constructing a Con/Span culvert or approved equal in accordance with these specifications and in reasonably close conformity with the lines, grades, design and dimensions shown on the plans or as established by the Engineer.

2. TYPES

Precast reinforced concrete Con/Span culverts or approved equal manufactured in accordance with this specification shall be designated by span and rise.

3. MATERIALS - CONCRETE

The concrete for the culverts shall be air-entrained when installed in areas subject to freeze-thaw conditions, composed of portland cement, fine and course aggregates, admixtures and water. Concrete shall contain 6 ± 2 percent air. The air entraining admixture shall conform to AASHTO M154.

3.1. Cement - Portland cement shall conform to the requirements of ASTM Specifications C150-Type I, Type II, or Type III cement.

3.2 Course Aggregate - Shall consist of stone having a maximum size of 25 mm Aggregate shall meet requirements for ASTM C33.

3.3 Water Reducing Admixture - The manufacturer may submit for approval by the Engineer, water-reducing admixture for the purpose of increasing workability and reducing the water requirement for the concrete.

3.4 Calcium Chloride - The addition to the mix of calcium chloride or admixtures containing calcium chloride will not be permitted.

4. MATERIALS - STEEL REINFORCEMENT AND HARDWARE

All reinforcing steel for the culverts shall be fabricated and placed in accordance with the detailed shop drawings submitted by the manufacturer.

4.1 Steel Reinforcement - Reinforcement shall consist of welded wire fabric conforming to ASTM Specification A 185 or A 497, or deformed billet steel bars conforming to ASTM Specification A 615, Grade 400. Longitudinal distribution reinforcement may consist of welded wire fabric or deformed billet-steel bars.

5. MANUFACTURE

5.1 Mixture - The aggregates, cement and water shall be proportioned and mixed in a batch mixer to produce a homogeneous concrete meeting the strength requirements of this specification. The proportion of portland cement in the mixture shall not be less than 256 kg (5 sacks) per cubic meter of concrete.

5.2 Curing - The precast concrete culvert units shall be cured for a sufficient length of time so that the concrete will develop the specified compressive strength in 28 days or less. Any one of the following methods of curing or combinations thereof shall be used:

5.2.1 Steam Curing - The culverts may be low pressure, steam cured by a system that will maintain a moist atmosphere.

5.2.2 Water Curing - The culverts may be water cured by any method that will keep the sections moist.

5.2.3 Membrane Curing - A sealing membrane conforming to the requirements ASTM Specification C 309 may be applied and shall be left intact until the required concrete compressive strength is attained. The Concrete temperature at the time of application shall be within ± 6 degree C of the atmospheric temperature. All surfaces shall be kept moist prior to the application of the compounds and shall be damp when the compound is applied.

5.3 Forms - the forms used in manufacture shall be sufficiently rigid and accurate to maintain the culvert dimensions within the permissible variations given in Section 7. All casting surfaces shall be of smooth material.

5.4 Handling - Handling devices or holes shall be permitted in each culvert for the purpose of handling and setting.

5.5 Storage - The culverts shall be stored in such a manner to prevent cracking or damage. The units shall not be stored in an upright position until the compressive strength is a minimum of 28 MPa.

6. DESIGN

6.1 The culvert dimension and reinforcement details shall be as prescribed in the plan and the shop drawings provided by the manufacturer subject to the provisions of Section 7. The minimum concrete compressive strength shall be 28 MPa. The minimum steel yield strength shall be 400 MPa.

The culverts are designed in accordance with the "Standard Specifications for Highway Bridges" adopted by the American Association of State Highway and Transportation Officials, 1996 ; and the Alternate Military Loading. A minimum of 300 mm of cover above the crown of the culvert is required in the installed condition. (Unless noted otherwise and designed accordingly.)

6.2 Placement of Reinforcement - The cover of concrete over the outside circumferential reinforcement shall be 50 mm minimum. The cover of concrete over the inside circumferential reinforcement shall be 40 mm minimum. The clear distance of the end circumferential wires shall not be less than 25 mm nor more than 50 mm from the ends of the culvert. Reinforcement shall be assembled utilizing single or multiple layers of welded wire fabric, or utilizing a single layer of deformed billet-steel bars. The welded wire fabric shall be composed of circumferential and longitudinal wires meeting the spacing requirements of 6.4 and shall contain sufficient longitudinal wires extending through the culvert to maintain the shape and position of reinforcement. Longitudinal distribution reinforcement may be welded wire fabric or deformed billet-steel bars and shall meet the spacing requirements of 6.4. The ends of the longitudinal distribution reinforcment shall be not more than 75 mm from the ends of the culvert.

6.3 Bending of Reinforcement - the outside and inside circumferential reinforcing steel for the corners of the culvert shall be bent to such an angle that is approximately equal to the configuration of the culvert's outside corner.

6.4 Laps, Welds, and Spacing - Tension splices in the circumferential reinforcement shall be made by lapping. Laps may be tack welded together for assembly purposes. For smooth welded wire fabric, the overlap shall meet the requirements of ACI 12.8 and 12.19. For deformed welded wire fabric, the overlap shall meet the requirements of ACI 12.7 and 12.18. For deformed billet-steel bars, the overlap shall meet the requirements of ACI 12.2. For splices other than tension splices, the overlap shall be a minimum of 300 mm for welded wire fabric or deformed billet-steel bars. The spacing center to center of the circumferential wires in a wire fabric sheet shall be not less than 50 mm nor more than 100 mm. For the wire fabric, the spacing center to center of the longitudinal wires shall not be more than 200 mm. The spacing center to center of the longitudinal distribution steel for either line of reinforcing in the top slab shall be not more than 400 mm.

7. PERMISSIBLE VARIATIONS

7.1 Internal Dimensions - The internal dimension shall vary not more than 1% from the design dimensions nor more than 40 mm whichever is less. The haunch dimensions shall vary not more than 20 mm from the design dimension.

7.2 Slab and Wall Thickness - The slab and wall thickness shall not be less than that shown in the design by more than 6 mm. A thickness more than that required in the design shall not be cause for rejection.

7.3 Length of Opposite Surfaces - Variations in laying lengths of two opposite surfaces of the culvert shall not be more than 16 mm in any culvert section, except where beveled ends for laying of curves are specified by the purchaser.

7.4 Length of Section - The underrun in length of a section shall not be more than 13 mm in any culvert.

7.5 Position of Reinforcement - The maximum variation in position of the reinforcement shall be ± 13 mm. In no case shall the cover over the reinforcement be less than 40 mm for the outside circumferential steel or be less than 25 mm for the inside circumferential steel as measured to the external or internal surface of the culvert. These tolerances or cover requirements do not apply to mating surfaces of the joints.

7.6 Area of Reinforcement - The areas of steel reinforcement shall be the design steel areas as shown in the manufacturer's shop drawings. Steel areas greater than those required shall not be cause for rejection. The permissible variation in diameter of any reinforcement shall conform to the tolerances prescribed in the ASTM Specification for that type of reinforcement.

8. TESTING AND INSPECTION

8.1 Type of Test Specimen - Concrete compressive strength shall be determined from compression tests made on cylinders or cores. For cylinder testing a minimum of 4 cylinders shall be taken during each production run. For core testing, one core shall be cut from a culvert section selected at random from each group of 15 culverts or less of a particular size and production run. For each continuous production run, each group of 15 culverts of a single size or fraction thereof shall be considered separately for the purpose of testing and acceptance. A production run shall be considered continuous if not interrupted for more than 3 consecutive days.

8.2 Compression Testing - Cylinders shall be made and tested as prescribed by the ASTM C 39 Specification. Cores shall be obtained and tested for compressive strength in accordance with the provisions of the ASTM C 497 Specification.

8.3 Acceptability of Cylinder Tests - Failure of any of the 28 day test cylinders to meet 90 percent of the minimum compressive strength requirement can be cause for rejection.

8.4 Acceptability of Core Tests - The Compressive strength of the concrete in each group of culverts as defined in 8.1 is acceptable when the core test strength are equal to or greater than the design concrete strength. When the compressive strength of the core tested is less than the design concrete strength, the culvert from which that core was taken may be recored. When the compressive strength of the recore is equal to or greater than the design concrete strength, the compressive strength of the concrete in that group of culverts is acceptable.

8.4.1 When the compressive strength of any recore is less than the design concrete strength, the culvert from which that core was taken shall be rejected. Two culverts from the remainder of the group shall be selected at random and one core shall be taken from each. If the compressive strength of both cores is equal to or greater than the design concrete strength, the compressive strength of the remainder of that group of culverts is acceptable. If the compressive strength of either of the two cores tested is less than the design concrete strength, the remainder of the group of culverts shall be rejected or, at the option of the manufacturer, each culvert of the remainder of the group shall be cored and accepted individually, and any of these culverts that have cores with less than the design concrete strength shall be rejected.

8.4.2 Plugging Core Holes - The core holes shall be plugged and sealed by the manufacturer in a manner such that the culvert will meet all of the test requirements of this specification. Culverts so sealed shall be considered satisfactory for use.

8.4.3 Test Equipment - Every manufacturer furnishing culverts under this specification shall furnish all facilities and personnel necessary to carryout the test required.

9. JOINTS

The culverts shall be produced with flat butt ends. The ends of the culvert shall be such that when the sections are laid together they will make a continuous line of culverts with a smooth interior free of appreciable irregularities, all compatible with the permissible variations in Section 7. The joint width shall not exceed 20 mm.

10. WORKMANSHIP AND FINISH

The culverts shall be substantially free of fractures. The ends of the culverts shall be normal to the walls and centerline of the culvert section, within the limits of the variations given in Section 7, except where beveled ends are specified. The surface of the culverts shall be a smooth steel form or troweled surface. Trapped air pockets causing surface defects shall be considered as part of a smooth steel form finish.

11. REPAIRS

Culverts may be repaired, if necessary, because of imperfections in manufacture or handling damage and will be acceptable if, in the opinion of the purchaser, the repairs are sound, properly finished and cured, and the repaired section conforms to the requirements of this specification.

12. INSPECTION

The quality of materials, the process of manufacture, and the finished culverts shall be subject to inspection by the purchaser.

13. REJECTION

Culverts shall be subject to rejection on account of any of the specification requirements. Individual culverts may be rejected because of any of the following.

13.1 Fractures or cracks passing through the wall, except for a single end crack that does not exceed one half the thickness of the wall.

13.2 Defects that indicate proportioning, mixing, and molding not in compliance with Section 5.

13.3 Honeycombed or open texture, and

13.4 Damaged ends, where such damage would prevent making a satisfactory joint.

14. MARKING

Each culvert shall be clearly marked by waterproof paint. The following shall be shown on the inside of the vertical leg of the culvert section:

Culvert Section Span X Culvert Rise

Date of Manufacture

Name or trademark of the manufacturer

And in the case of headwall sections, east or west face shall also be marked

15. CONSTRUCTION REQUIREMENTS

15.1 Footings - the culverts shall be installed on either precast or cast-in-place concrete footings. The design size and elevation of the footers shall be as determined by the Engineer. A 75 mm deep keyway shall be formed in the top surface of the footing 75 mm clear of the outside faces of the culvert, unless specified otherwise on the plans. the footings shall be given a smooth float finish and shall reach a compressive strength of 14 MPa before placement of the culvert sections. The completed footing surface shall be constructed in accordance with grades shown on the plans. When tested with a 3000 mm straight edge, the surface shall not vary more than 6 mm in 3000 mm. If a precast concrete footer is used, the contractor shall prepare a 100 mm thick layer of compacted granular material the full width of the footer prior to placing the precast footer.

15.2 Placement of the Culverts - The culverts shall be placed as shown on the Engineer's plan drawings. Special care shall be taken in setting the culverts to the true line and grade. The culverts shall be set on 150 mm X 150 mm masonite or steel shims. A minimum of 13 mm gap shall be provided between the footing and the bottom of the culvert's vertical legs. The gap shall be filled with cement grout (portland cement and water or cement mortar composed of one part portland cement and three parts of sand, by volume, and water.

15.3 External Protection of Joints - The butt joint made by two adjoining culverts shall be covered with a 22 mm X 35 mm (32 mm round equivalent) piece of butyl tape and a minimum of 230 mm wide joint wrap. The surface shall be free of dirt before applying the joint material. A primer compatible with the joint wrap to be used shall be applied for a minimum width of 230 mm on each side of the joint. The external wrap shall be either EZ-WRAP RUBBER by PRESS-SEAL GASKET CORPORATION, SEAL WRAP by MAR MAC MANUFACTURING CO. INC. or approved equal. The joint shall be covered continuously from the bottom of the culvert leg, across the top of the arch and to the opposite culvert section leg. Any laps that result in the joint wrap shall be a minimum of 150 mm long with the overlap running downhill.

In addition to the joints between units, the joint between the end unit and the headwall shall be sealed. If using precast wingwalls, the joint between the end bridge unit and the wingwall shall be sealed with this type of wrap or at the discretion of the Engineer, filter fabric shall be substituted.

During the backfilling operation, care shall be taken to keep the joint wrap in its proper location over the joint.

15.4 Backfill - Backfill shall be considered as all replaced excavation and new embankment adjacent to the Con/Span or approved equal bridge units and wingwalls. The project construction and material specifications which include the specifications for excavation for structures and roadway excavation and embankment construction shall apply except as modified in this section.

Backfill material for a minimum width of 1220 mm on each side of the culvert, from the base of the unit to 300 mm above the outside corner shall be a soil meeting AASHTO classification A1, A2, A3 or A4 unless authorization to use a different materials given in writing by the designer. For heights of fill over 3660 mm, only A1 & A3 materials shall be used. Maximum dry density shall be determined by AASHTO T-99 or other approved methods. Backfill shall be placed and compacted in layers until the density is not less than 95% of maximum dry density. All material outside the backfill zone shall be good quality, well compacted embankment or in situ soil.

No backfill shall be placed against any structural elements until they have been approved by the Engineer.

Backfill against a waterproofed surface shall be placed carefully to avoid damage to the waterproofing material.

Mechanical tampers or approved compacting equipment shall be used to compact all backfill and embankment immediately adjacent to each side of the culvert and over the top of the culvert until it is covered to a minimum depth of 300 mm. The backfill within 1220 mm of each side of the culvert shall be placed in lifts of 200 mm or less (loose depth). Heavy compaction equipment shall not be operated in this area or over the culvert until it is covered to a depth of 300 mm.

Lightweight dozers and graders may be operated over culverts having one 300 mm of compacted cover, but heavy earth moving equipment (larger than a D-4 Dozer weighing in excess of 107 kN and having track pressures of 55 kPa or greater) shall require 600 mm of cover unless the design cover is less than 600 mm. In no case shall equipment operating in excess of the design load (MS18 or MS23) is to be permitted over the culvert unless approved by Con\Span or approved equal.

Any additional fill and subsequent excavation required to provide this minimum cover shall be made at no additional cost to the project.

As a precaution against introducing unbalanced stresses in the culvert and wingwalls, when placing backfill at no time shall the difference between the heights of fill on opposite sides of the culvert exceed 600 mm.

Backfill in front of wingwalls shall be carried to ground lines shown in the plans.

16. MEASUREMENT AND PAYMENT

The completed work as measured for Precast Culvert will be paid for at the contract unit price for the following contract item (pay item).

Pay Item	Pay Unit
12802 x 4267 precast concrete three - sided box Culvert	Meter

Payment for Precast Culvert shall be payment in full for labor, equipment and material necessary to design, manufacture and install the arch elements, including any steel shims needed to level the arch elements, casting holes in the elements as needed for guardrail posts, casting in the anchor assembly per STD. B-18-B, furnishing and placing the grout between the footing and the arch elements, precast headwall units, steel connection plates between units, and furnishing and placing the joint waterproofing.

METRIC

DIMENSIONS ARE IN MILLIMETERS UNLESS OTHERWISE SHOWN. ELEVATIONS, COORDINATES, CURVE AND ALIGNMENT DATA ARE IN METERS. STATIONS ARE IN KILOMETERS + METERS.

REVISIONS			
DSGN BY	C.D.P.	12-97	
DR'N BY	R.J.D.	5-97	
CK'D BY	R.G.W.	5-97	
FINAL CK'D BY	M.D.W.	2-99	
APP'D BY			

SNEL ENVIRONMENTAL GROUP, INC. A DLZ Company
151 W. CONGRESS, SUITE 328
DETROIT, MICHIGAN 48226
TELEPHONE (313) 961-4040

DETROIT — Making it better for you

CITY OF DETROIT
MICHIGAN

RIVERSIDE AVE.
OVER CANAL
(BW-242)

PRECAST CULVERT
SPECIFICATIONS

SCALE NOT TO SCALE
PROJECT NO. 9641-5160-
SHEET NO. R7 OF 8

FILE NAME: 07note.DGN

BAR	DIMENSIONS a	b	c	d	e	f	g	h	j	k	m	NO. REQ'D	TOTAL MASS
A1601700	1700											236	623
A1605377	5377											56	467
A1607570	7570											56	658
											SUBTOTAL =		1748 kg
EA1301650	1650											88	144
EA1304435	4435											40	176
EA1313360	13360											12	159
ED1902018*	940	138	940									64	289
											EPOXY SUBTOTAL =		768 kg

* SHALL BE CAST IN PRECAST CULVERT HEADWALL.

REINFORCEMENT SHALL BE BUNDLED AND TAGGED AS TO THE LOCATION AS SHOWN ON THIS SHEET.

ALL BENDS IN REINFORCING STEEL TO BE MADE ABOUT A PIN OF THE MINIMUM DIAMETER ALLOWED BY THE STANDARD SPECIFICATIONS.

TOLERANCES IN CUTTING AND BENDING BARS ARE AS ESTABLISHED IN THE MANUAL OF STANDARD PRACTICE OF THE CONCRETE REINFORCING STEEL INSTITUTE AND DETAILING MANUAL OF THE AMERICAN CONCRETE INSTITUTE.

WHERE FIELD CUTTING OF EPOXY BARS IS REQUIRED, THE CONTRACTOR SHALL REPAIR THE EPOXY COATING AT THE CUT END AS PROVIDED FOR IN STANDARD SPECIFICATION 706.03.E.8.

EPOXY COATED
BAR SIZE
BAR LENGTH (mm)

EA2013000

BAR SHAPE

BAR LEGEND

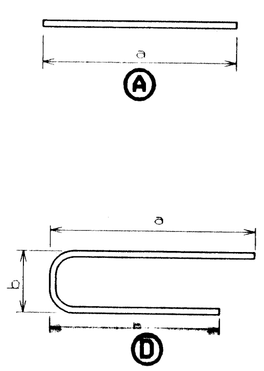

SUMMARY OF QUANTITIES

ITEM NO.	ITEM DESCRIPTION	UNIT	QUANTITY
1500000	MOBILIZATION, MAX.	Lsum	1
2020002	TREE, REMOVE, 451 TO 900 mm	ea	1
2040005	CURB, REMOVE	m	46
2040020	STRUCTURES, REMOVE	Lsum	1
2050010	EMBANKMENT, CIP	m3	110
2060002	BACKFILL, STRUCTURE, CIP	m3	400
2060011	EXCAVATION, FOUNDATION	m3	500
2080025	EROSION CONTROL, SILT FENCE	m	210
3010002	SUBBASE, CIP	m3	42
3020010	AGGREGATE BASE, 100 mm	m2	556
3050001	BITUMINOUS BASE CRUSHING AND SHAPING	m2	345
4017102	12 802 X 4267 PRECAST CONC THREE-SIDED BOX CULVERT	m	13
4040030	UNDERDRAIN, FOUNDATION, 100 mm	m	55
4040110	UNDERDRAIN, OUTLET ENDING, 00 mm	ea	2
6020206	CONCRETE PAVEMENT WITH INTEGRAL CURB (TYPE IIIR), REINFORCED 240 mm	m2	573
7040003	STEEL SHEET PILING, TEMP., LEFT IN PLACE	m2	409
7060002	CONCRETE, GRADE T	m3	92
7060007	CONCRETE, GRADE D	m3	10
7060020	SUBSTRUCTURE CONCRETE	m3	107
7060030	REINFORCEMENT, STEEL	kg	1748
7060031	REINFORCEMENT, STEEL, EPOXY COATED	kg	768
7060040	CONCRETE, LOW TEMPERATURE PROTECTION	m3	117
7060250	STRUCTURE NAME PLATE	ea	2
7110004	BRIDGE RAILING, SOLID PARAPET TYPE	m	27
7110007	BRIDGE RAILING, ONE TUBE	m	27
8030002	SIDEWALK, CONCRETE, 100 mm	m2	33
8120036	BARRICADE, TYPE III, LIGHTED, FURN.	ea	4
8120037	BARRICADE, TYPE III, LIGHTED, OPER.	ea	3
8120041	CONCRETE BARRIER, TEMPORARY, FURNISHED	m	30.5
8120042	CONCRETE BARRIER, TEMPORARY, OPERATED	m	30.5
8120060	SIGN, TYPE B TEMPORARY, PRISMATIC RETRFLEC SHEETING	m2	1
8130015	RIPRAP, HEAVY	m2	66
8160003	WATER	kL	5
8160007	SEEDING, MIXTURE TUF	kg	4
8160020	FERTILIZER, CHEMICAL NUTRIENT, CLASS A	kg	5
8160072	MULCH ANCHORING	m2	160
8160077	MULCH BLANKET	m2	160

METRIC

DIMENSIONS ARE IN MILLIMETERS UNLESS OTHERWISE SHOWN. ELEVATIONS, COORDINATES, CURVE AND ALIGNMENT DATA ARE IN METERS. STATIONS ARE IN KILOMETERS + METERS.

REVISIONS			
DSGN BY	CDP	12-97
DR'N BY	RJD	5-97
CK'D BY	RGW	5-97
FINAL CK'D BY	MDW	2-99
APP'D BY		

SEG

SNELL ENVIRONMENTAL GROUP, INC. A DLZ Company
151 W. CONGRESS, SUITE 328
DETROIT, MICHIGAN 48226
TELEPHONE (313) 961-4040

DETROIT
Making it better for you

CITY OF DETROIT
MICHIGAN

RIVERSIDE AVE.
OVER CANAL
(BW-242)

STEEL REINFORCEMENT
AND
QUANTITIES

SCALE NOT TO SCALE
PROJECT NO. 9641-5160-01
SHEET NO. R8 OF 8

FILE NAME: 08BAR01.DGN

R:\9641516001\bridge\final\08bar0 Feb 2, 1999 16:36:16

UTILITIES

ELECTRIC
DETROIT EDISON
2000 SECOND AVE.
ROOM 607 G.O., DETROIT, MICHIGAN 48226
ATTN.: JOHN SQUIRES
PHONE No.: (313) 235-6597

TELEPHONE
AMERITECH
4000 ALLEN RD., ROOM 101
ALLEN PARK, MICHIGAN 48101
ATTN.: DAVE BUCIENSKI
PHONE No.: (313) 389-9819

GAS
MICHIGAN CONSOLIDATED GAS CO.
DRAFTING CLERK
MAIN REPLACEMENT TEAM
NOBLE SECOND FLOOR
3200 HOBSON
DETROIT, MICHIGAN 48201
PHONE No.: (313) 577-7236

WATER & SEWAGE
CITY OF DETROIT WATER & SEWERAGE DEPARTMENT
735 RANDOLPH ST.
DETROIT, MICHIGAN 48226
PHONE No.: (313) 224-4800

LIGHTING
CITY OF DETROIT PUBLIC LIGHTING DEPARTMENT.
9449 GRINNEL
DETROIT, MICHIGAN 48226
PHONE No.: (313) 267-7336

EXISTING STRUCTURE

ONE - SPAN REINFORCED CONCRETE ARCH STRUCTURE MEASURING 12.80 METERS REFERENCE LINE TO REFERENCE LINE. BUILT IN 1909, 9144 mm CLEAR ROADWAY.

BENCH MARK

B.M. #62-258 ELEV. 175.773
MONUMENT BOX IN SIDEWALK, NORTHEAST QUADRANT OF JEFFERSON AVE. AND CHALMERS

B.M. #62-255A ELEV. 174.776
MONUMENT BOX IN SIDEWALK, NORTHEAST QUADRANT OF FREUD AND CHALMERS

PROPOSED REPLACEMENT RIVERSIDE AVE. BRIDGE
MDOT - B01 OF 1038
CITY - BW-242

EXISTING STRUCTURE TO BE REMOVED

DRIVEWAYS TO BE PAVED TO PROVIDE A SMOOTH TRANSITION BETWEEN PROPOSED PAVEMENT AND EXISTING DRIVEWAY AS DIRECTED BY ENGINEER. INCLUDED IN PAY ITEM "CONCRETE PAVEMENT".

STA 9+975 TO STA 9+989
REMOVE 15 m CURB
STA 9+975 TO STA 9+993.243
PLACE 20 m TYPE IIIR, INTEGRAL CURB

STA 10+010 TO STA 10+019
REMOVE 10 m CURB
STA 10+006.756 TO STA 10+019
PLACE 13 m TYPE IIIR, INTEGRAL CURB

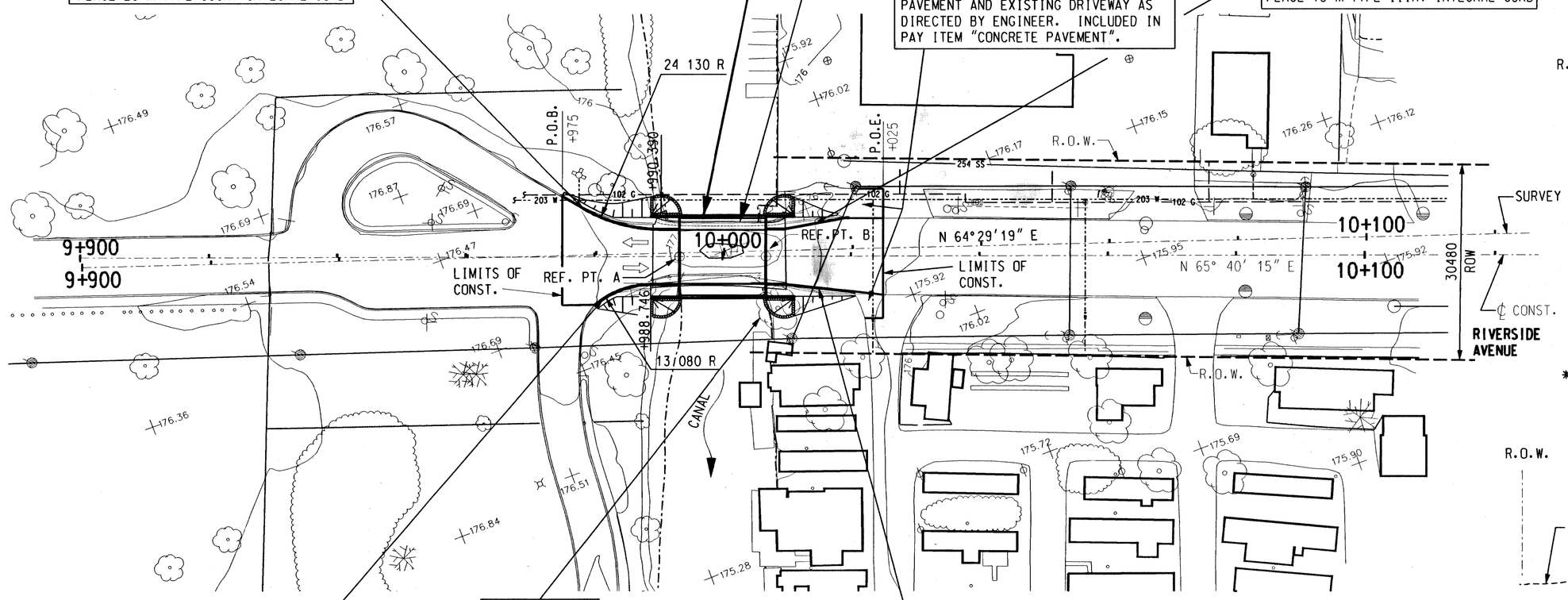

STA 9+980 TO STA 9+989
REMOVE 10 m CURB
STA 9+980 TO STA 9+993.243
PLACE 14 m TYPE IIIR, INTEGRAL CURB

REMOVE TREE, 451 TO 900 mm

STA 10+010 TO STA 10+021
REMOVE 11 m CURB
STA 10+006.756 TO STA 10+021
PLACE 14 m TYPE IIIR, INTEGRAL CURB

PLAN OF SITE
SCALE 1:500
CONTOUR 0.50 m

WITNESSES

WITNESS TO SURVEY ℄ STA. 9+900		(MAG NAIL)
N 60° W	N & S IN W. SIDE 254 mm LOCUST	10.766 m
N 20° W	N & S IN W. SIDE 203 mm LOCUST	9.372 m
S 10° W	N & S IN E. SIDE POWER POLE	16.278 m

WITNESS TO SURVEY ℄ STA. 10+100		(PK SET)
N 70 W	N & S IN S. SIDE 762 mm MAPLE	11.950 m
S 80° E	N & S IN N. SIDE POWER POLE	33.000 m
N 15° W	N & S IN E. SIDE POWER POLE	18.530 m

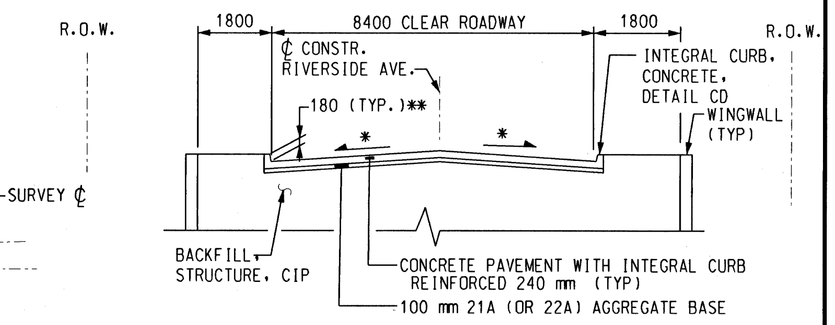

TYPICAL APPROACH SECTION
STA. 9+989.408 TO STA. 9+993.243 &
STA. 10+006.756 TO STA. 10+011.054

** FEATHER APPROACH CURB ELEV. TO BRIDGE CURB ELEV.

* TRANSITION FROM 0% AT BRIDGE TO MATCH EXISTING CROSS SLOPE AT APPROACHES

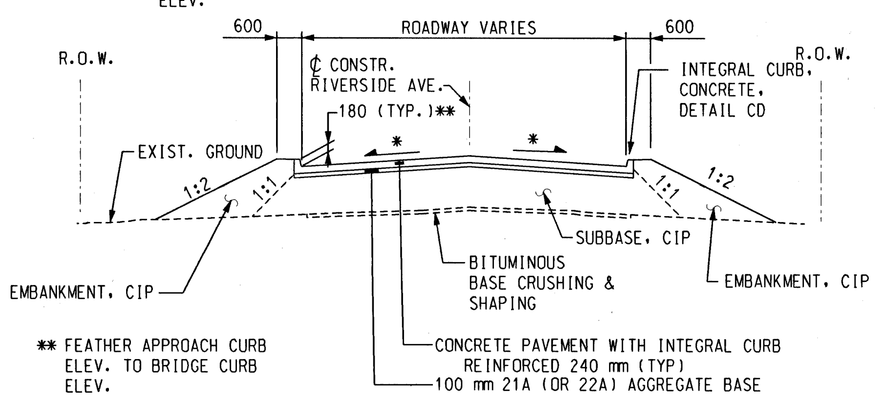

** FEATHER APPROACH CURB ELEV. TO BRIDGE CURB ELEV.

TYPICAL APPROACH SECTION
STA. 9+975.000 TO STA. 9+989.408 &
STA. 10+011.054 TO STA. 10+025.000

* TRANSITION FROM 0% AT BRIDGE TO MATCH EXISTING CROSS SLOPE AT APPROACHES

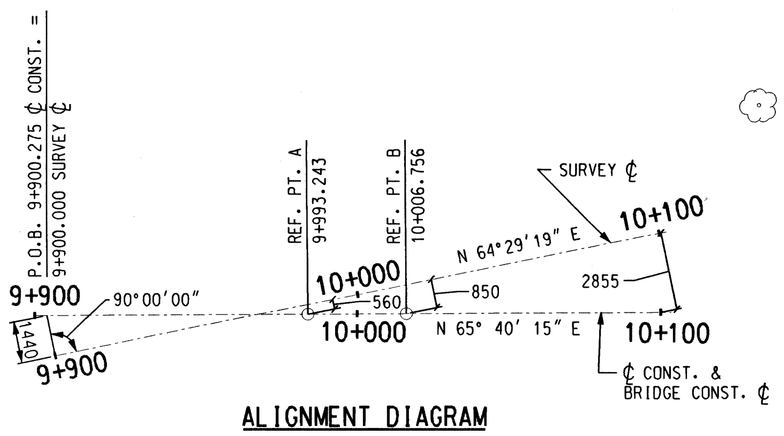

ALIGNMENT DIAGRAM

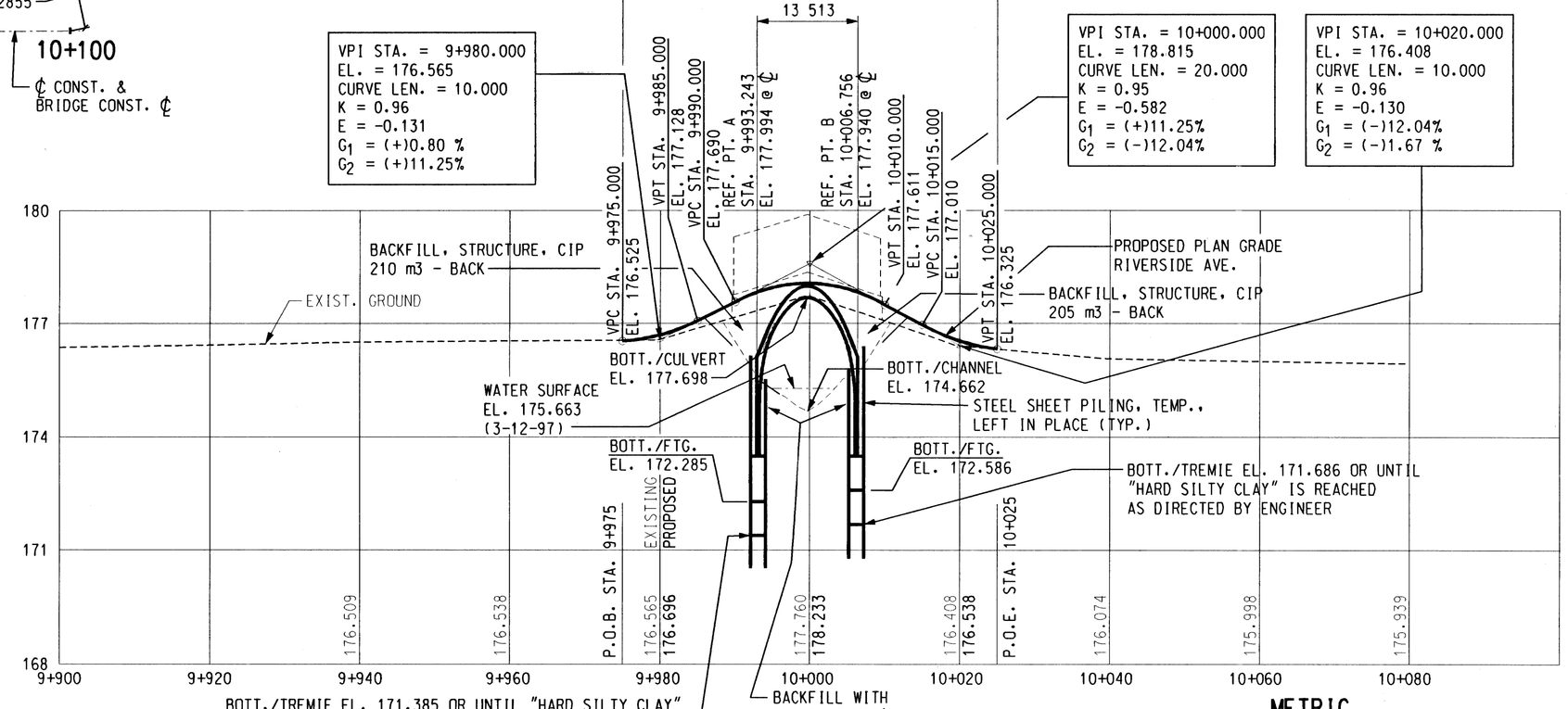

PROFILE ALONG ℄ CONSTRUCTION RIVERSIDE AVE.
VERT. SCALE 1:100
HORIZ. SCALE 1:500

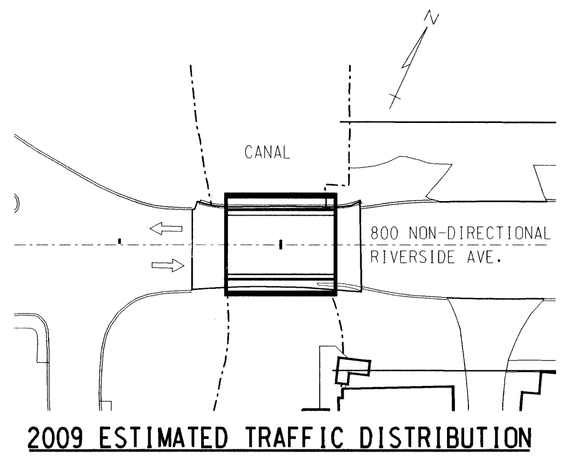

2009 ESTIMATED TRAFFIC DISTRIBUTION
000 AVERAGE DAILY TRAFFIC
⇨ DIRECTIONAL TRAFFIC

METRIC
DIMENSIONS ARE IN MILLIMETERS UNLESS OTHERWISE SHOWN. ELEVATIONS, COORDINATES, CURVE AND ALIGNMENT DATA ARE IN METERS. STATIONS ARE IN KILOMETERS + METERS.

NOTES:

THE WORK COVERED BY THESE PLANS INCLUDES REMOVAL OF EXISTING BRIDGE, CONSTRUCTION OF THE PROPOSED BRIDGE, PLACING RIPRAP AND APPROACH WORK.

THE CONTRACTOR SHALL LOCATE ALL ACTIVE UNDERGROUND UTILITIES PRIOR TO STARTING WORK AND SHALL CONDUCT HIS OPERATIONS IN SUCH A MANNER AS TO ENSURE THAT THOSE UTILITIES NOT REQUIRING RELOCATION WILL NOT BE DISTURBED.

RIVERSIDE AVE. WILL BE CLOSED TO THRU TRAFFIC FOR THE PROJECT DURATION.

DATUM REFERS TO N.A.V.D. DATUM.

WATER LEVEL IS SUBJECT TO CHANGE. THE CONTRACTOR IS RESPONSIBLE FOR MAKING HIS OWN DETERMINATION OF WATER LEVELS THAT WILL EXIST DURING CONSTRUCTION.

MEASURES SHALL BE TAKEN TO PREVENT DEBRIS FROM FALLING FROM THE STRUCTURE. IF DEBRIS FALLS INTO THE WATERWAY, IT SHALL BE REMOVED WITHIN 24 HOURS. SINCE DISTURBANCE OF THE WATERWAY BOTTOM MAY BE AS HARMFUL AS THE DEBRIS ITSELF, THE PREVENTIVE MEASURES MUST BE MADE AS EFFECTIVE AS POSSIBLE. DEBRIS WHICH HAS PREVIOUSLY FALLEN FROM THE BRIDGE SHALL ALSO BE REMOVED AS DIRECTED BY THE ENGINEER.

TEMPORARILY STORED EXCAVATED MATERIAL SHALL NOT BE ALLOWED TO ERODE INTO THE WATERCOURSE.

PRIOR TO PLACEMENT OF THE TREMIE SEAL, WATER PUMPED FROM THE "TEMPORARY STEEL SHEET PILING, TEMP, LEFT IN PLACE" SHALL BE DISCHARGED INTO A GEOTEXTILE FILTER BAG. AFTER TREMIE SEAL PLACEMENT, AND WHERE PERMITTED BY THE ENGINEER, PUMPS MAY OUTLET DIRECTLY INTO THE RIVER.

ALL DISTURBED EXISTING GROUND AND ANY NEW FILL SLOPES SHALL BE SEEDED, FERTILIZED, AND MULCHED AS DIRECTED BY THE ENGINEER. TO BE INCLUDED IN THE PAY ITEMS "SEEDING, MIXTURE TUF," "FERTILIZER, CHEMICAL NUTRIENT, CLASS A," AND "MULCH BLANKET."

REVISIONS			
DSGN BY	C.D.P.	12-97
DR'N BY	R.J.D.	5-97
CK'D BY	R.G.W.	5-97
FINAL CK'D BY	M.D.W.	2-99
APP'D BY		

SNELL ENVIRONMENTAL GROUP, INC. A DLZ Company
151 W. CONGRESS, SUITE 328
DETROIT, MICHIGAN 48226
TELEPHONE (313) 961-4040

DETROIT — Making it better for you

CITY OF DETROIT
MICHIGAN

RIVERSIDE AVE.
OVER CANAL
(BW-242)

GENERAL
PLAN OF
SITE

SCALE NOT TO SCALE
PROJECT NO. 9641-5160-01
SHEET NO. R2 OF 19

FILE NAME: 02SITE .DGN

h:\96415160.01\bridge\final\02site Feb. 2, 1999 13:57:14

TEST HOLE TB-#R-1

LOCATION STATION 9+986.350 6939 LT.
RIVERSIDE AVE. OVER CANAL
ELEV. GROUND SURFACE ELEVATION 176.567 ELEV.

ESTIMATED TOTAL SCOUR LIMIT ABUT. A
EL. 176.000 +/-

Elev.	Blows	Description
176.567		FILL - Mixed loose silty fine sand, clayey fine sand and silty clay, with gravel, trace roots, organics and brick pieces, dark brown (SC)
176.037	3 3 3	(Driller reported concrete, brick and wire)
175.348		
175.272	1 1 1	Very loose SILTY FINE TO MEDIUM SAND, with frequent seams and pockets of organic silt, trace gravel, roots, organics and shell fragments, black and gray, wet (SM)
174.510	1 1 1	
173.748	2 1 1	
172.909		Loose layered CLAYEY SILT and SILTY FINE SAND, trace gravel and shell fragments, gray, wet (ML) (SM)
172.224	1 2 3	BOTTOM OF FOOTING (FOOTING A) ELEV. 172.285
171.385		BOTTOM OF TREMIE (FOOTING A) ELEV. 171.385
170.700	14 16 18	Hard SILTY CLAY, with sand, trace gravel, mottled brown and gray (CL)
169.861		Stiff SILTY CLAY, some sand and gravel, mottled gray and brown changing to gray below ELEV. 168.337 (CL)
169.176	4 6 7	
167.652	4 5 9	
166.813		Stiff SANDY CLAY, with silt, trace gravel, gray (CL/SC)
166.128	5 7 7	
165.289		Stiff SILTY CLAY, some sand and gravel, gray (CL)
164.604	4 5 6	
163.765		Soft to medium SILTY CLAY, some sand, trace gravel, gray (CL)
163.080	3 3 3	
161.556	3 3 3	
160.032	2 4 6	

CONTINUED

CONTINUED

Elev.	Blows	Description
158.508	3 4 4	
156.984	4 3 4	
155.460	3 4 4	
153.936	4 4 4	
152.412	3 4 5	Soft to medium SILTY CLAY, some sand, trace gravel, with occasional silt partings and pockets below ELEV. 150.659, gray (CL)
150.888	4 4 5	
149.364	4 4 4	
147.840	4 3 5	
146.316	4 4 5	
145.477		Stiff SILTY CLAY, trace sand, gray (CL/ML)
144.792	6 10 13	
144.106		Very stiff SILTY CLAY and dense CLAYEY SILT, some sand, trace gravel, gray (CL/ML)
143.268	10 16 28	
141.881		Limestone fragments, dark gray
141.820	TO (15)	Bottom of Boring - 34.747 m

NOTE:
WATER FIRST ENCOUNTERED AT ELEV. 175.043

BORING DATE 4/ 4/97

TEST HOLE TB-#R-2

LOCATION STATION 10+011.894 3242 LT.
RIVERSIDE AVE. OVER CANAL
ELEV. GROUND SURFACE ELEVATION 176.868

ESTIMATED TOTAL SCOUR LIMIT ABUT. B
EL. 176.000 +/-

Elev.	Blows	Description
176.868		152 mm of ASPHALTIC CONCRETE
176.716		
176.335	2 2 2	FILL - Very loose to loose silty fine sand and silty sand topsoil, some gravel, trace clay, roots, vegetation, organics, shell fragments, wood, paper and plastic pieces, brown and black, moist to wet (SM)
175.573	1 3 4	
175.192		
174.811	2 5 4	Loose SILTY FINE TO COARSE SAND, some gravel, trace organics, brown and gray, wet (SM)
174.430		
174.049	2 5 3	Loose FINE TO MEDIUM SAND, trace gravel and organics, with occasional silt seams, gray, wet (SP)
173.210		Loose SILTY FINE SAND, with clay, trace gravel and organics, with frequent clay seams, gray, wet (SM)
172.525	1 2 3	BOTTOM OF FOOTING (FOOTING B) ELEV. 172.586
171.686		BOTTOM OF TREMIE (FOOTING B) ELEV. 171.686
171.001	7 13 21	Hard SILTY CLAY, with sand, trace gravel, mottled brown and gray (CL)
170.162		Very stiff SILTY SANDY CLAY, some gravel, with frequent sand seams, gray (CL)
169.477	7 11 13	
167.953	7 11 12	
166.810		Stiff to medium SILTY CLAY, with sand, trace gravel, gray (CL)
166.429	8 6 5	
164.905	1 6 8	
164.676		Bottom of Boring - 12.192 m.

NOTE:
WATER FIRST ENCOUNTERED AT ELEV. 175.649

BORING DATE 4/ 4/97

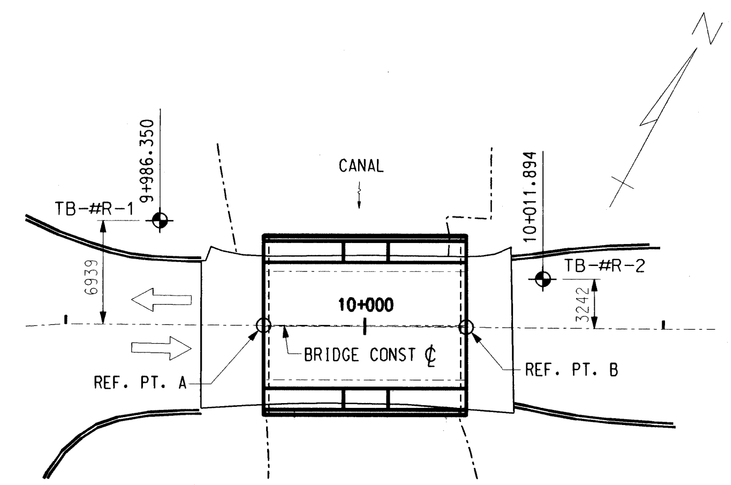

PLAN
SCALE: NTS

NOTES:

NUMBERS IN CIRCLES DENOTE NUMBER OF BLOWS REQUIRED TO DRIVE A 50.8 mm SPLIT SPOON SAMPLER 3 SUCCESSIVE 0.15 m INCREMENTS USING A 63.5 kg HAMMER FALLING 0.76 m. WHERE THE SAMPLER IS DRIVEN DISTANCES OTHER THAN THE 0.15 m INCREMENT, THE DISTANCE IS SHOWN IN PARENTHESIS TO THE RIGHT OF THE NUMBER OF BLOWS.

X
X
X — NUMBER OF BLOWS PER 0.15 m
NUMBER OF BLOWS PER 0.15 m
NUMBER OF BLOWS PER 0.15 m

X
X
XX(XX) — NUMBER OF BLOWS PER 0.15 m
NUMBER OF BLOWS PER 0.15 m
NUMBER OF BLOWS PER DISTANCE (mm)

XX(XX) — NUMBER OF BLOWS PER DISTANCE (mm)

CONSISTENCY WAS DETERMINED BY INSPECTION OF SAMPLES AND SUBSTANTIATED BY SOILS RESISTANCE TO DRILLING TOOLS.

WATER LEVELS MAY BE INFLUENCED BY RESIDUAL BORING WATER.

THE SOIL BORING LOGS REPRESENT POINT INFORMATION. PRESENTATION OF THIS INFORMATION IN NO WAY IMPLIES THAT SUBSURFACE CONDITIONS ARE THE SAME AT LOCATIONS OTHER THAN THE EXACT LOCATION OF THE BORING.

SOIL BORINGS WERE PERFORMED ON DATES SHOWN BELOW BORING.

BY: SOMAT ENGINEERING, INC.
26445 Northline Rd
Taylor, Michigan 48180
PHONE: (313) 946-4966

METRIC

DIMENSIONS ARE IN MILLIMETERS UNLESS OTHERWISE SHOWN. ELEVATIONS, COORDINATES, CURVE AND ALIGNMENT DATA ARE IN METERS. STATIONS ARE IN KILOMETERS + METERS.

REVISIONS			
DSGN BY	C.D.P.	12-97
DR'N BY	R.J.D.	4-97
CK'D BY	R.G.W.	5-97
FINAL CK'D BY	M.D.W.	2-99
APP'D BY		

SNELL ENVIRONMENTAL GROUP, INC. A DLZ Company
151 W. CONGRESS, SUITE 328
DETROIT, MICHIGAN 48226
TELEPHONE (313) 961-4040

DETROIT Making it better for you

CITY OF DETROIT
MICHIGAN

RIVERSIDE AVE.
OVER CANAL
(BW-242)

LOG OF BORINGS

SCALE NOT TO SCALE
PROJECT NO. 9641-5160-01
SHEET NO. R3 OF 19

FILE NAME: 02BORING.DGN

h:\96415160.01\bridge\final\03bor1 Feb. 2, 1999 14:07:04

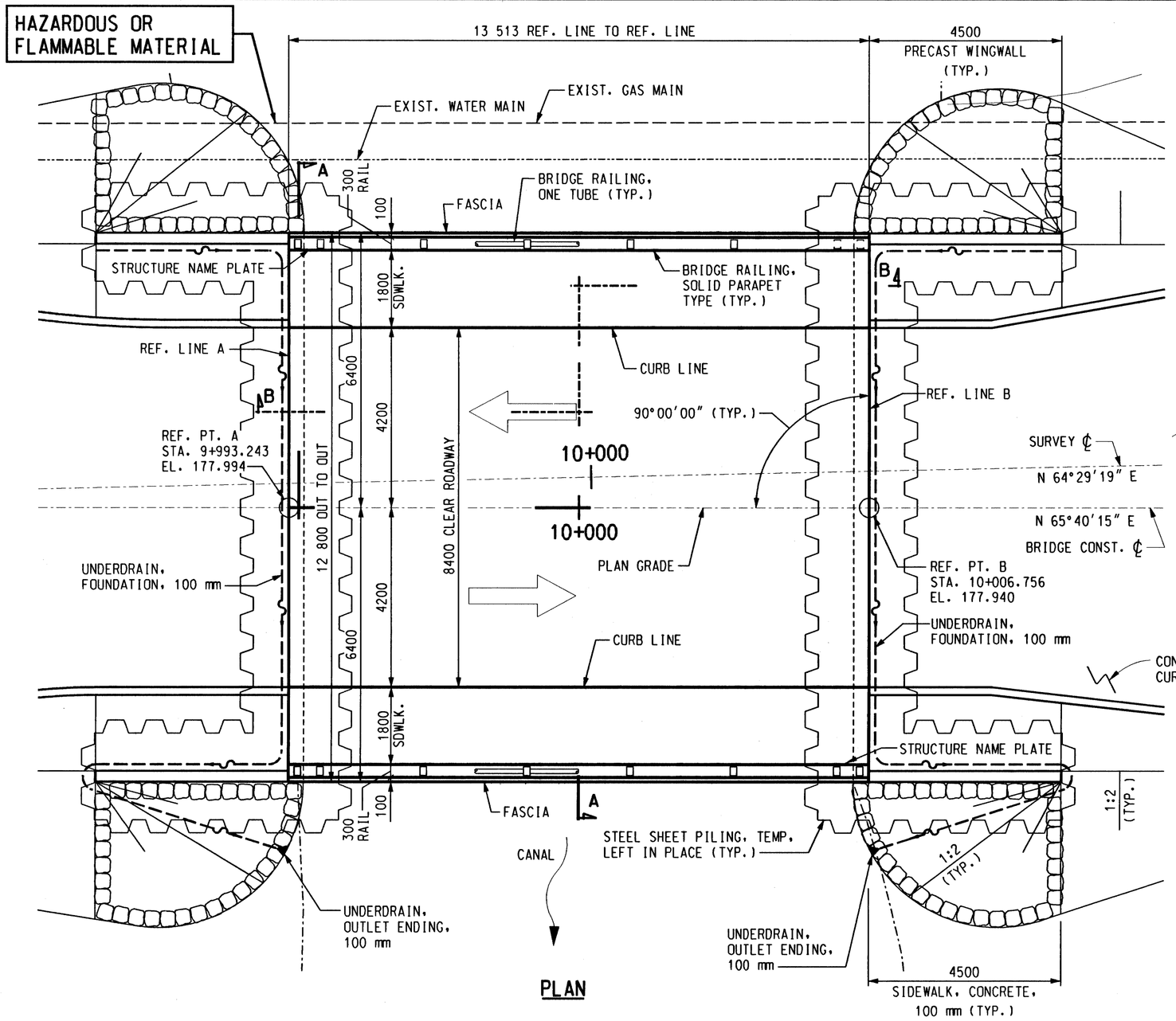

PLAN

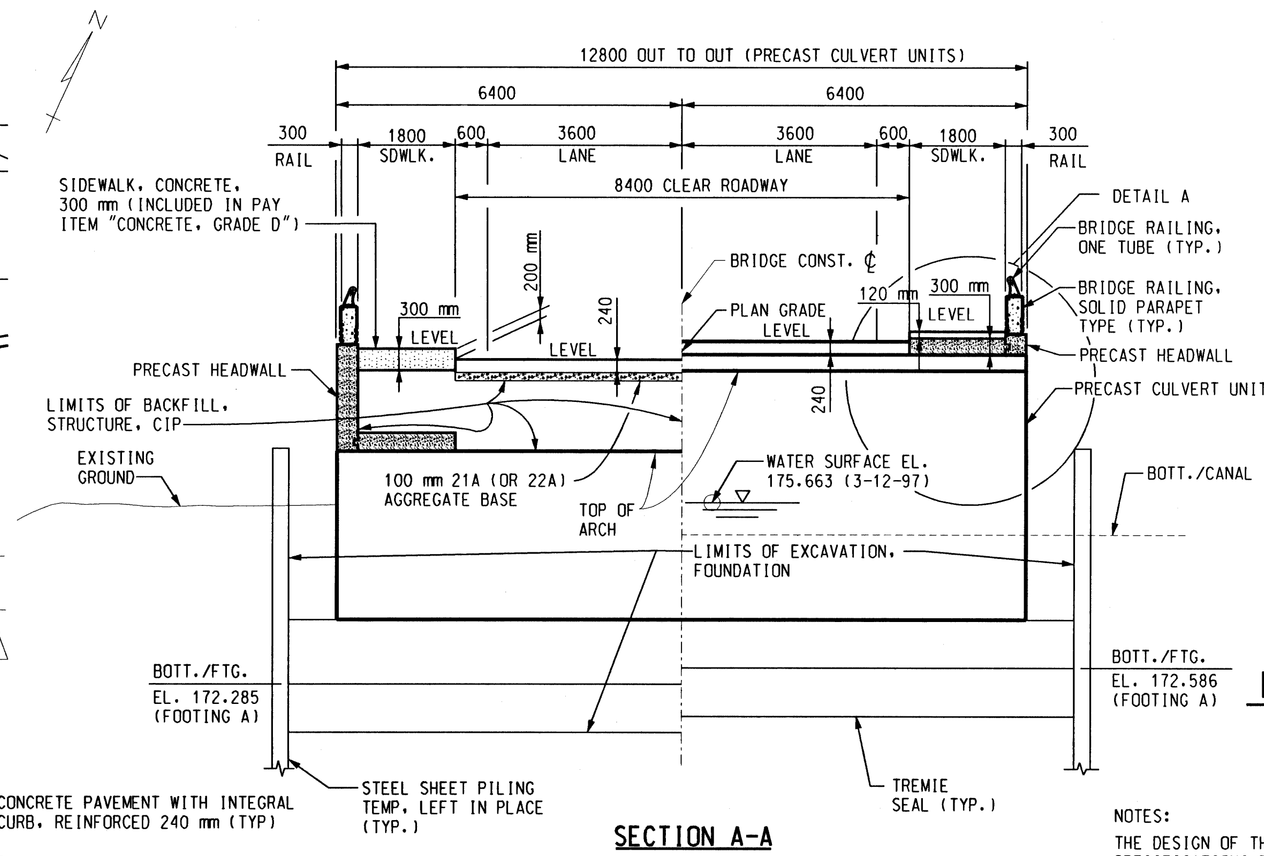

SECTION A-A

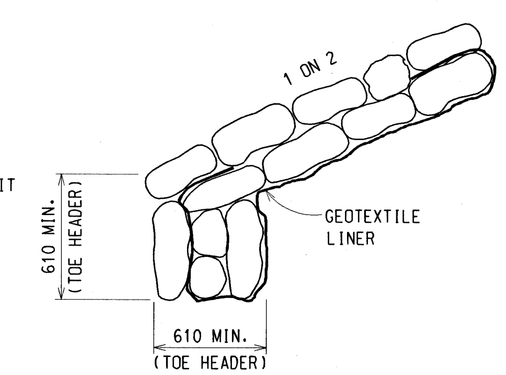

RIPRAP HEADER DETAILS

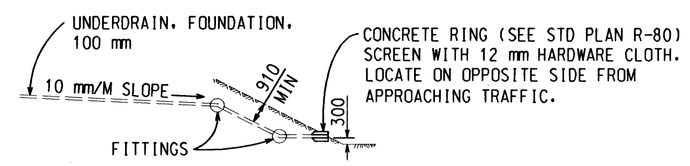

DETAIL FOR UNDERDRAIN DRAINAGE

NOTES:

THE DESIGN OF THIS STRUCTURE IS BASED ON CURRENT AASHTO STANDARD SPECIFICATIONS FOR HIGHWAY BRIDGES MS18 LOADING. LIVE LOAD PLUS IMPACT DEFLECTION DOES NOT EXCEED 1/1000 OF SPAN LENGTH. THE LOAD FACTOR METHOD OF DESIGN WAS USED FOR THIS STRUCTURE.

THE TOP OF THE ROADWAY AND TOPS OF SIDEWALKS ARE PARALLEL TO THE VERTICAL CURVE.

DEWATERING SHALL BE INCLUDED IN THE PAY ITEM "STEEL SHEET PILING, TEMP, LEFT IN PLACE".

RIPRAP, HEAVY TO BE PLACED ON SLOPES AT ALL FOUR QUADRANTS. NO BROKEN CONCRETE SHALL BE PLACED AS RIPRAP, HEAVY

PERIODIC ACCESS SHALL BE PROVIDED BY THE CONTRACTOR TO THE ISLAND (WEST SIDE OF THE BRIDGE) FOR THE CITY OF DETROIT PARKS AND RECREATION DEPARTMENT FOR MOWING.

REMOVAL OF STRUCTURE INCLUDES ANY DEBRIS IN CHANNEL AND THAT WHICH WAS PREVIOUSLY PART OF THE STRUCTURE. THIS WILL ALSO INCLUDE ANY PILING THAT CONFLICTS WITH PROPOSED STRUCTURE.

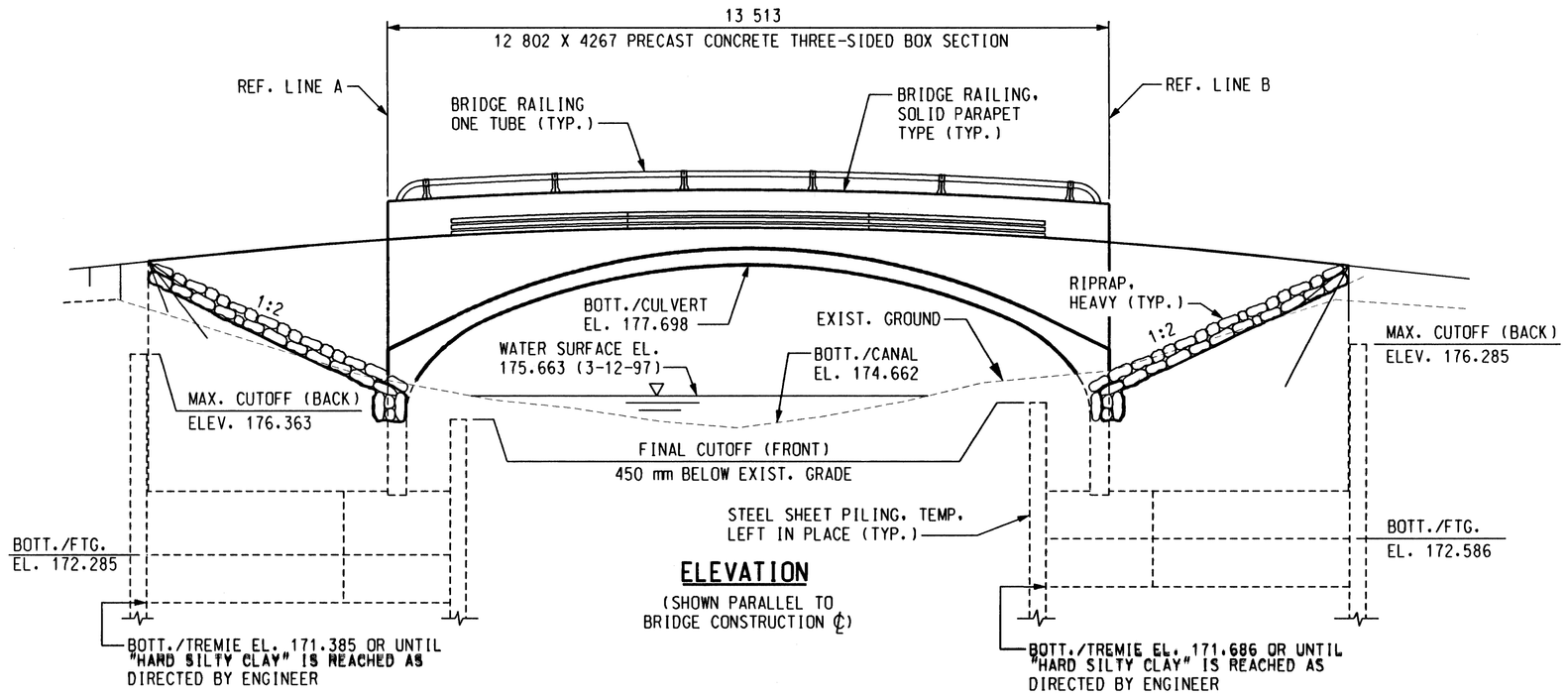

ELEVATION

(SHOWN PARALLEL TO BRIDGE CONSTRUCTION ℄)

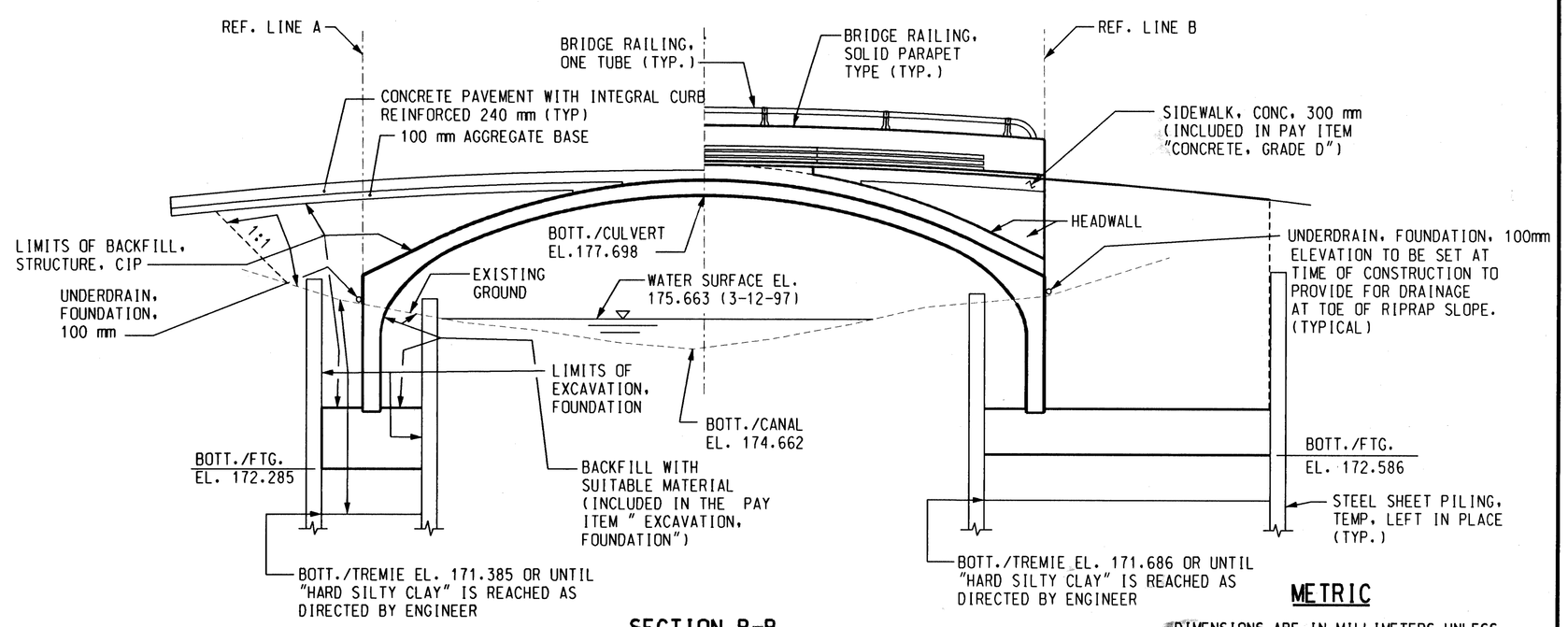

SECTION B-B

METRIC

DIMENSIONS ARE IN MILLIMETERS UNLESS OTHERWISE SHOWN. ELEVATIONS, COORDINATES, CURVE AND ALIGNMENT DATA ARE IN METERS. STATIONS ARE IN KILOMETERS + METERS.

REVISIONS			
	DSGN BY	C.D.P.	12-97
	DR'N BY	R.J.D.	5-97
	CK'D BY	R.G.W.	5-97
	FINAL CK'D BY	M.D.W.	2-99
	APP'D BY		

SNELL ENVIRONMENTAL GROUP, INC. A DLZ Company
151 W. CONGRESS, SUITE 328
DETROIT, MICHIGAN 48226
TELEPHONE (313) 961-4040

DETROIT Making it better for you

CITY OF DETROIT
MICHIGAN

RIVERSIDE AVE.
OVER CANAL
(BW-242)

GENERAL
PLAN OF
STRUCTURE

SCALE NOT TO SCALE
PROJECT NO. 9641-5160-01
SHEET NO. R4 OF 19

FILE NAME: 01GPSTR1.DGN

h:\96415160.01\bridge\final\04gpst Feb. 2, 1999 14:08:39

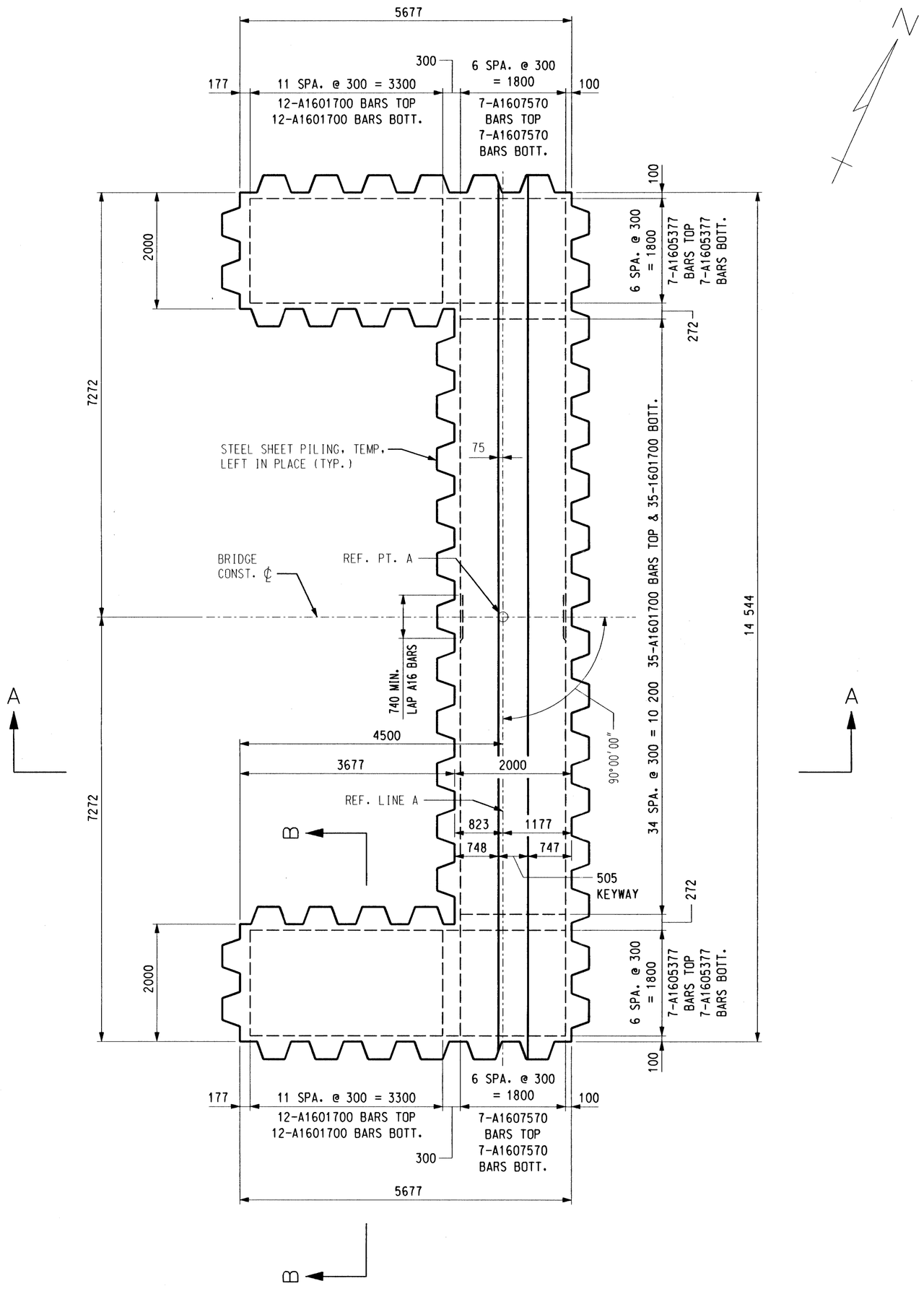

PLAN OF FOOTING LAYOUT

(ABUTMENT A SHOWN ABUTMENT B OPPOSITE HAND)

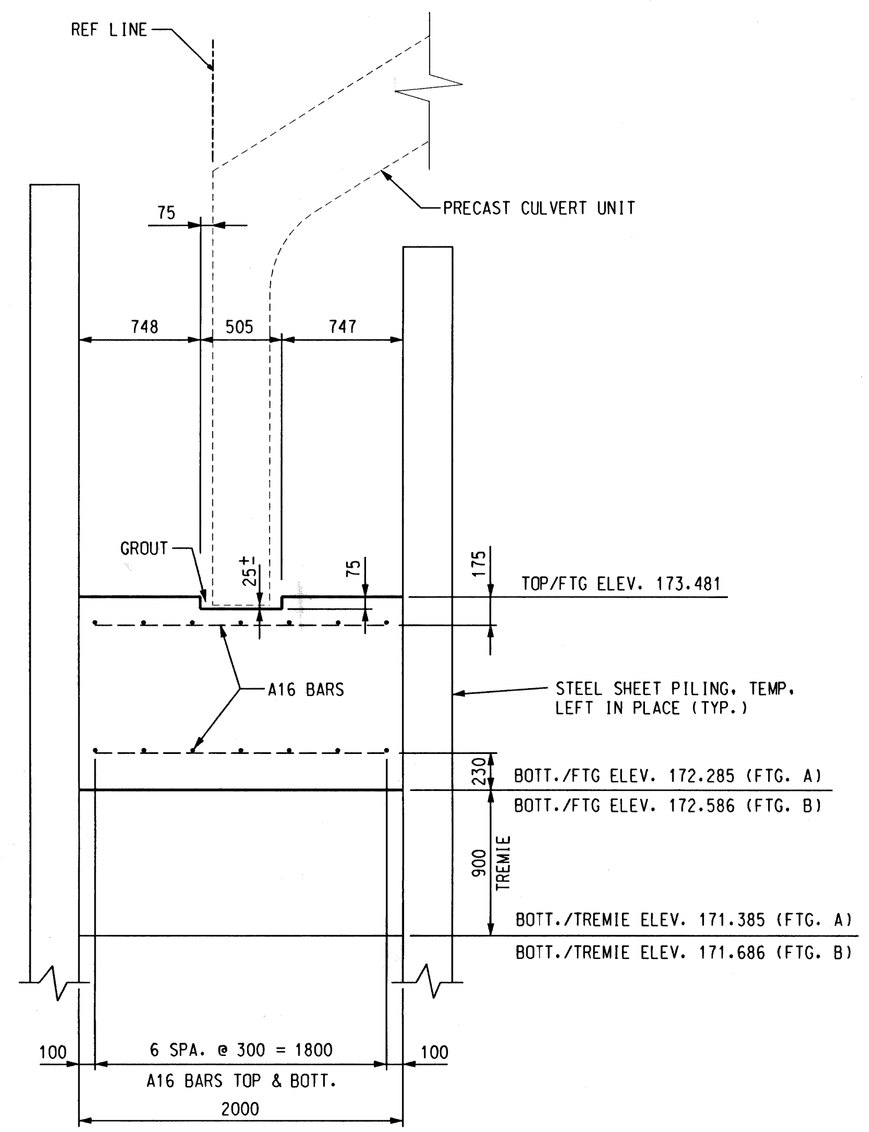

SECTION A-A

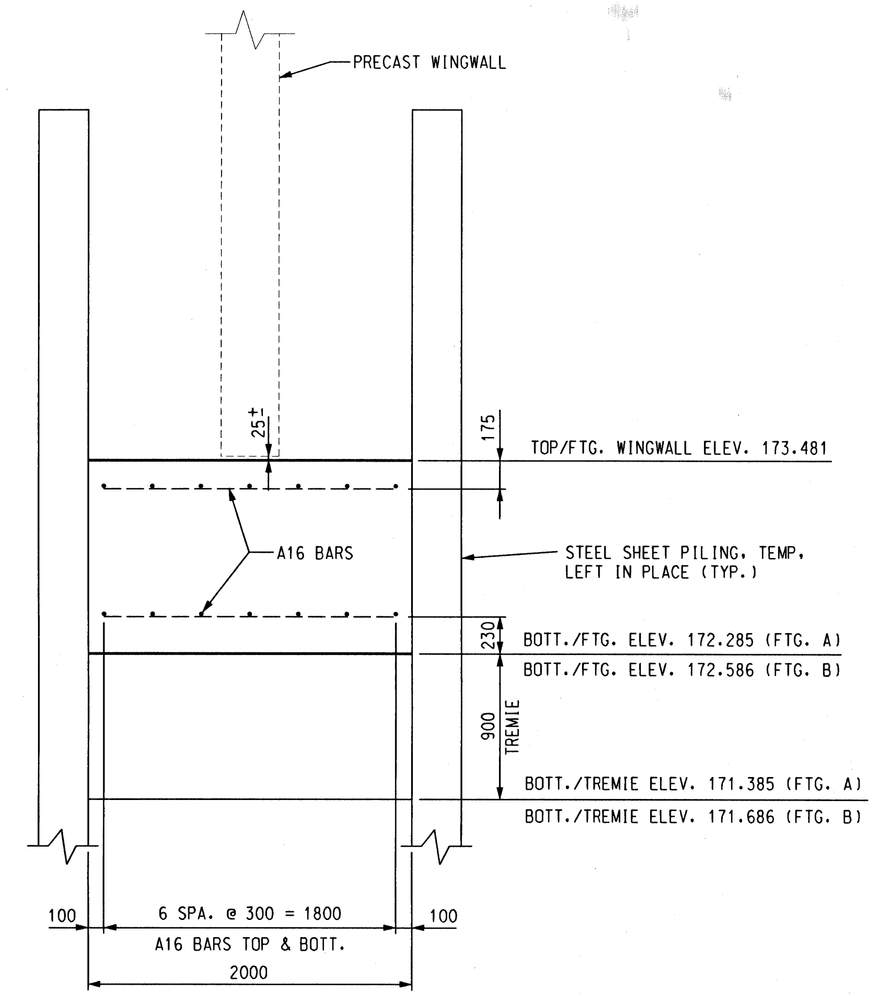

SECTION B-B

METRIC

DIMENSIONS ARE IN MILLIMETERS UNLESS OTHERWISE SHOWN. ELEVATIONS, COORDINATES, CURVE AND ALIGNMENT DATA ARE IN METERS. STATIONS ARE IN KILOMETERS + METERS.

REVISIONS			
DSGN BY	C.D.P.	12-97
DR'N BY	R.J.D.	5-97
CK'D BY	R.G.W.	5-97
FINAL CK'D BY	M.D.W.	2-99
APP'D BY		

SNELL ENVIRONMENTAL GROUP, INC. A DLZ Company
151 W. CONGRESS, SUITE 328
DETROIT, MICHIGAN 48226
TELEPHONE (313) 961-4040

DETROIT Making it better for you

CITY OF DETROIT
MICHIGAN

RIVERSIDE AVE
OVER CANAL
(BW-242)

FOOTING
DETAILS

SCALE NOT TO SCALE
PROJECT NO. 9641-5160-01
SHEET NO. R5 OF 19

FILE NAME: 05CA1S01.DGN

h:\96415160.01\bridge\final\05ftg0 Feb. 2, 1999 14:15:29

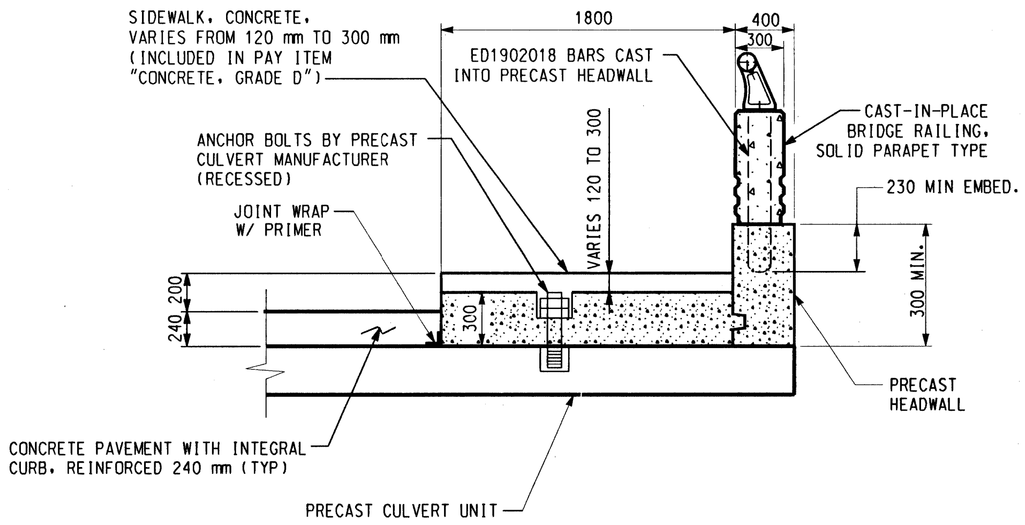

DETAIL A

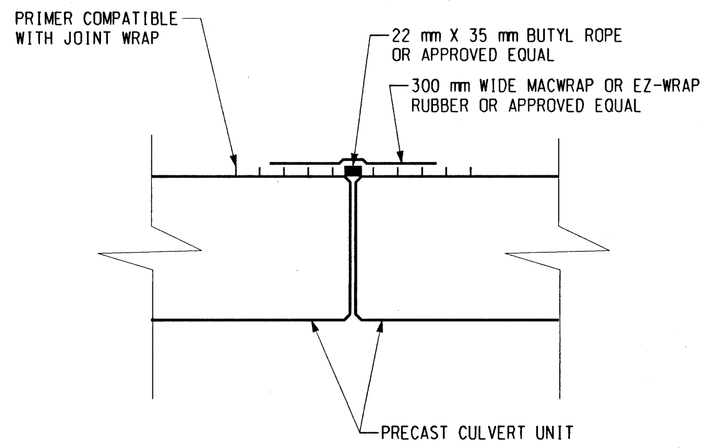

STANDARD JOINT DETAIL

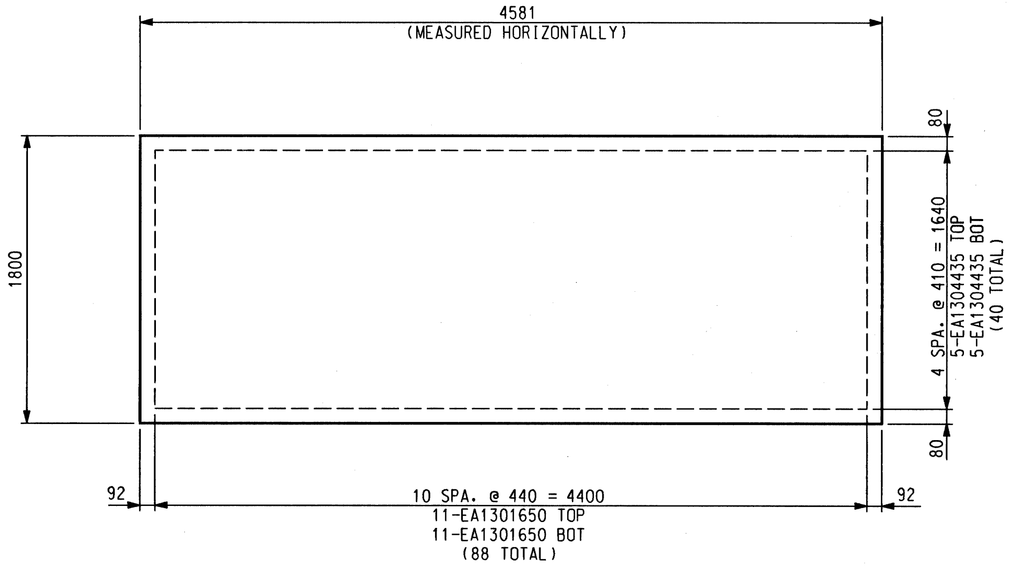

TYPICAL SIDEWALK, CONCRETE, 300 mm DETAIL

(TYPICAL ALL 4 QUADRANTS)

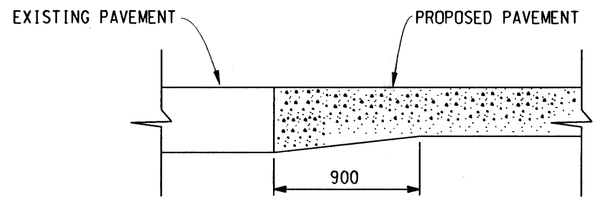

PROVIDE THIS THICKENED EDGE WHERE PROPOSED PAVEMENT MEETS EXIST. PAVEMENT

DETAIL OF THICKENED EDGE

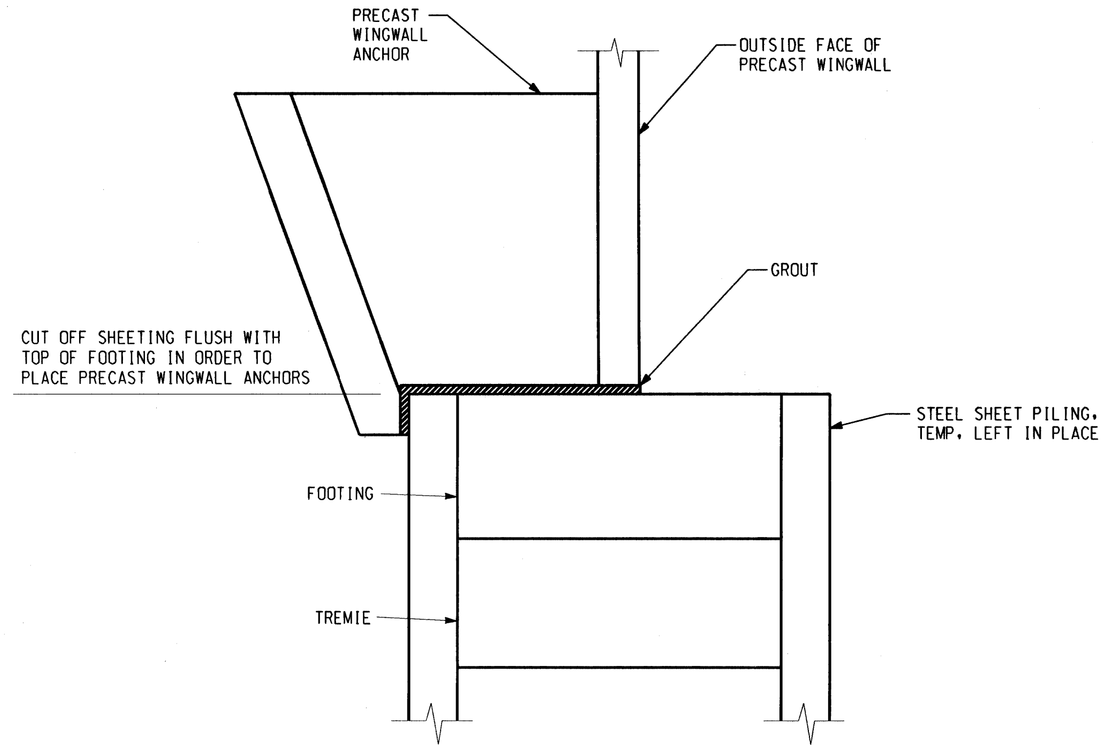

TYPICAL SECTION THRU PRECAST WINGWALL

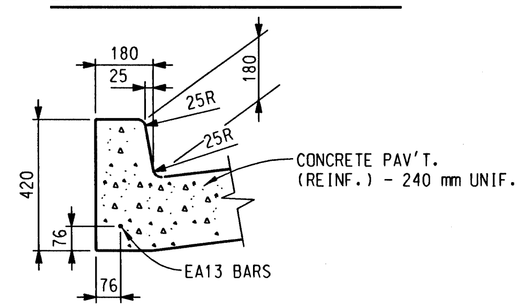

TYPE IIIR, INTEGRAL CURB

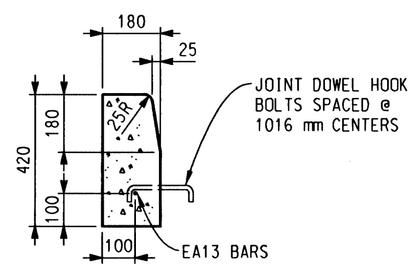

TYPE IIR, CONCRETE CURB

(OPTIONAL)

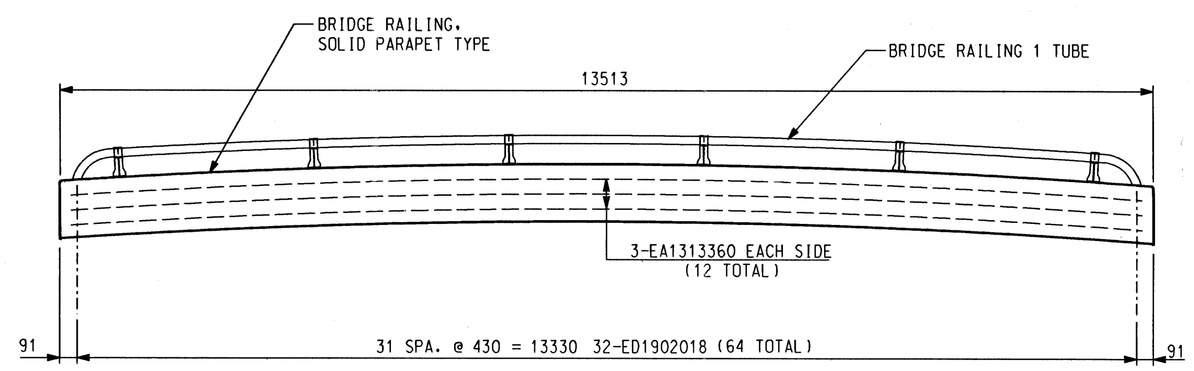

BRIDGE RAILING ELEVATION

NOTE:

DEWATERING SHALL BE INCLUDED IN PAY ITEM "STEEL SHEET PILING, TEMP, LEFT IN PLACE"

METRIC

DIMENSIONS ARE IN MILLIMETERS UNLESS OTHERWISE SHOWN. ELEVATIONS, COORDINATES, CURVE AND ALIGNMENT DATA ARE IN METERS. STATIONS ARE IN KILOMETERS + METERS.

REVISIONS			
DSGN BY	C.D.P.	12-97
DR'N BY	R.J.D.	5-97
CK'D BY	R.G.W.	5-97
FINAL CK'D BY	M.D.W.	2-99
APP'D BY		

SNELL ENVIRONMENTAL GROUP, INC. A DLZ Company
151 W. CONGRESS, SUITE 328
DETROIT, MICHIGAN 48226
TELEPHONE (313) 961-4040

DETROIT Making it better for you

CITY OF DETROIT
MICHIGAN

RIVERSIDE AVE.
OVER CANAL
(BW-242)

MISCELLANEOUS
DETAILS

SCALE NOT TO SCALE
PROJECT NO. 9641-5160-01
SHEET NO. R6 OF 19

FILE NAME: 06DET.DGN

h:\96415160.01\bridge\final\06det. Feb. 2, 1999 14:48:23

SPECIFICATIONS FOR MANUFACTURE AND INSTALLATION OF PRECAST CULVERT BRIDGE SYSTEMS

1. DESCRIPTION

This work shall consist of constructing a Con/Span culvert or approved equal in accordance with these specifications and in reasonably close conformity with the lines, grades, design and dimensions shown on the plans or as established by the Engineer.

2. TYPES

Precast reinforced concrete Con/Span culverts or approved equal manufactured in
accordance with this specification shall be designated by span and rise.

3. MATERIALS - CONCRETE

The concrete for the culverts shall be air-entrained when installed in areas subject to freeze-thaw conditions, composed of portland cement, fine and course aggregates, admixtures and water. Concrete shall contain 6 ± 2 percent air. The air entraining admixture shall conform to AASHTO M154.

3.1. Cement - Portland cement shall conform to the requirements of ASTM Specifications C150-Type I, Type II, or Type III cement.

3.2 Course Aggregate - Shall consist of stone having a maximum size of 25 mm Aggregate shall meet requirements for ASTM C33.

3.3 Water Reducing Admixture - The manufacturer may submit for approval by the Engineer, water-reducing admixture for the purpose of increasing workability and reducing the water requirement for the concrete.

3.4 Calcium Chloride - The addition to the mix of calcium chloride or admixtures containing calcium chloride will not be permitted.

4. MATERIALS - STEEL REINFORCEMENT AND HARDWARE

All reinforcing steel for the culverts shall be fabricated and placed in accordance with the detailed shop drawings submitted by the manufacturer.

4.1 Steel Reinforcement - Reinforcement shall consist of welded wire fabric conforming to ASTM Specification A 185 or A 497, or deformed billet steel bars conforming to ASTM Specification A 615, Grade 400. Longitudinal distribution reinforcement may consist of welded wire fabric or deformed billet-steel bars.

5. MANUFACTURE

5.1 Mixture - The aggregates, cement and water shall be proportioned and mixed in a batch mixer to produce a homogeneous concrete meeting the strength requirements of this specification. The proportion of portland cement in the mixture shall not be less than 256 kg (5 sacks) per cubic meter of concrete.

5.2 Curing - The precast concrete culvert units shall be cured for a sufficient length of time so that the concrete will develop the specified compressive strength in 28 days or less. Any one of the following methods of curing or combinations thereof shall be used:

5.2.1 Steam Curing - The culverts may be low pressure, steam cured by a system that will maintain a moist atmosphere.

5.2.2 Water Curing - The culverts may be water cured by any method that will keep the sections moist.

5.2.3 Membrane Curing - A sealing membrane conforming to the requirements ASTM Specification C 309 may be applied and shall be left intact until the required concrete compressive strength is attained. The Concrete temperature at the time of application shall be within + 6 degree C of the atmospheric temperature. All surfaces shall be kept moist prior to the application of the compounds and shall be damp when the compound is applied.

5.3 Forms - the forms used in manufacture shall be sufficiently rigid and accurate to maintain the culvert dimensions within the permissible variations given in Section 7. All casting surfaces shall be of smooth material.

5.4 Handling - Handling devices or holes shall be permitted in each culvert for the purpose of handling and setting.

5.5 Storage - The culverts shall be stored in such a manner to prevent cracking or damage. The units shall not be stored in an upright position until the compressive strength is a minimum of 28 MPa.

6. DESIGN

6.1 The culvert dimension and reinforcement details shall be as prescribed in the plan and the shop drawings provided by the manufacturer subject to the provisions of Section 7. The minimum concrete compressive strength shall be 28 MPa. The minimum steel yield strength shall be 400 MPa.

The culverts are designed in accordance with the "Standard Specifications for Highway Bridges" adopted by the American Association of State Highway and Transportation Officials, 1996 ; and the Alternate Military Loading. A minimum of 300 mm of cover above the crown of the culvert is required in the installed condition. (Unless noted otherwise and designed accordingly.)

6.2 Placement of Reinforcement - The cover of concrete over the outside circumferential reinforcement shall be 50 mm minimum. The cover of concrete over the inside circumferential reinforcement shall be 40 mm minimum. The clear distance of the end circumferential wires shall not be less than 25 mm nor more than 50 mm from the ends of the culvert. Reinforcement shall be assembled utilizing single or multiple layers of welded wire fabric, or utilizing a single layer of deformed billet-steel bars. The welded wire fabric shall be composed of circumferential and longitudinal wires meeting the spacing requirements of 6.4 and shall contain sufficient longitudinal wires extending through the culvert to maintain the shape and position of reinforcement. Longitudinal distribution reinforcement may be welded wire fabric or deformed billet-steel bars and shall meet the spacing requirements of 6.4. The ends of the longitudinal distribution reinforcment shall be not more than 75 mm from the ends of the culvert.

6.3 Bending of Reinforcement - the outside and inside circumferential reinforcing steel for the corners of the culvert shall be bent to such an angle that is approximately equal to the configuration of the culvert's outside corner.

6.4 Laps, Welds, and Spacing - Tension splices in the circumferential reinforcement shall be made by lapping. Laps may be tack welded together for assembly purposes. For smooth welded wire fabric, the overlap shall meet the requirements of ACI 12.8 and 12.19. For deformed welded wire fabric, the overlap shall meet the requirements of ACI 12.7 and 12.18. For deformed billet-steel bars, the overlap shall meet the requirements of ACI 12.2. For splices other than tension splices, the overlap shall be a minimum of 300 mm for welded wire fabric or deformed billet-steel bars. The spacing center to center of the circumferential wires in a wire fabric sheet shall be not less than 50 mm nor more than 100 mm. For the wire fabric, the spacing center to center of the longitudinal wires shall not be more than 200 mm. The spacing center to center of the longitudinal distribution steel for either line of reinforcing in the top slab shall be not more than 400 mm.

7. PERMISSIBLE VARIATIONS

7.1 Internal Dimensions - The internal dimension shall vary not more than 1% from the design dimensions nor more than 40 mm whichever is less. The haunch dimensions shall vary not more than 20 mm from the design dimension.

7.2 Slab and Wall Thickness - The slab and wall thickness shall not be less than that shown in the design by more than 6 mm. A thickness more than that required in the design shall not be cause for rejection.

7.3 Length of Opposite Surfaces - Variations in laying lengths of two opposite surfaces of the culvert shall not be more than 16 mm in any culvert section, except where beveled ends for laying of curves are specified by the purchaser.

7.4 Length of Section - The underrun in length of a section shall not be more than 13 mm in any culvert.

7.5 Position of Reinforcement - The maximum variation in position of the reinforcement shall be ± 13 mm. In no case shall the cover over the reinforcement be less than 40 mm for the outside circumferential steel or be less than 25 mm for the inside circumferential steel as measured to the external or internal surface of the culvert. These tolerances or cover requirements do not apply to mating surfaces of the joints.

7.6 Area of Reinforcement - The areas of steel reinforcement shall be the design steel areas as shown in the manufacturer's shop drawings. Steel areas greater than those required shall not be cause for rejection. The permissible variation in diameter of any reinforcement shall conform to the tolerances prescribed in the ASTM Specification for that type of reinforcement.

8. TESTING AND INSPECTION

8.1 Type of Test Specimen - Concrete compressive strength shall be determined from compression tests made on cylinders or cores. For cylinder testing a minimum of 4 cylinders shall be taken during each production run. For core testing, one core shall be cut from a culvert section selected at random from each group of 15 culverts or less of a particular size and production run. For each continuous production run, each group of 15 culverts of a single size or fraction thereof shall be considered separately for the purpose of testing and acceptance. A production run shall be considered continuous if not interrupted for more than 3 consecutive days.

8.2 Compression Testing - Cylinders shall be made and tested as prescribed by the ASTM C 39 Specification. Cores shall be obtained and tested for compressive strength in accordance with the provisions of the ASTM C 497 Specification.

8.3 Acceptability of Cylinder Tests - Failure of any of the 28 day test cylinders to meet 90 percent of the minimum compressive strength requirement can be cause for rejection.

8.4 Acceptability of Core Tests - The Compressive strength of the concrete in each group of culverts as defined in 8.1 is acceptable when the core test strength are equal to or greater than the design concrete strength. When the compressive strength of the core tested is less than the design concrete strength, the culvert from which that core was taken may be recored. When the compressive strength of the recore is equal to or greater than the design concrete strength, the compressive strength of the concrete in that group of culverts is acceptable.

8.4.1 When the compressive strength of any recore is less than the design concrete strength, the culvert from which that core was taken shall be rejected. Two culverts from the remainder of the group shall be selected at random and one core shall be taken from each. If the compressive strength of both cores is equal to or greater than the design concrete strength, the compressive strength of the remainder of that group of culverts is acceptable. If the compressive strength of either of the two cores tested is less than the design concrete strength, the remainder of the group of culverts shall be rejected or, at the option of the manufacturer, each culvert of the remainder of the group shall be cored and accepted individually, and any of these culverts that have cores with less than the design concrete strength shall be rejected.

8.4.2 Plugging Core Holes - The core holes shall be plugged and sealed by the manufacturer in a manner such that the culvert will meet all of the test requirements of this specification. Culverts so sealed shall be considered satisfactory for use.

8.4.3 Test Equipment - Every manufacturer furnishing culverts under this specification shall furnish all facilities and personnel necessary to carryout the test required.

9. JOINTS

The culverts shall be produced with flat butt ends. The ends of the culvert shall be such that when the sections are laid together they will make a continuous line of culverts with a smooth interior free of appreciable irregularities, all compatible with the permissible variations in Section 7. The joint width shall not exceed 20 mm.

10. WORKMANSHIP AND FINISH

The culverts shall be substantially free of fractures. The ends of the culverts shall be normal to the walls and centerline of the culvert section, within the limits of the variations given in Section 7, except where beveled ends are specified. The surface of the culverts shall be a smooth steel form or troweled surface. Trapped air pockets causing surface defects shall be considered as part of a smooth steel form finish.

11. REPAIRS

Culverts may be repaired, if necessary, because of imperfections in manufacture or handling damage and will be acceptable if, in the opinion of the purchaser, the repairs are sound, properly finished and cured, and the repaired section conforms to the requirements of this specification.

12. INSPECTION

The quality of materials, the process of manufacture, and the finished culverts shall be subject to inspection by the purchaser.

13. REJECTION

Culverts shall be subject to rejection on account of any of the specification requirements. Individual culverts may be rejected because of any of the following.

13.1 Fractures or cracks passing through the wall, except for a single end crack that does not exceed one half the thickness of the wall.

13.2 Defects that indicate proportioning, mixing, and molding not in compliance with Section 5.

13.3 Honeycombed or open texture, and

13.4 Damaged ends, where such damage would prevent making a satisfactory joint.

14. MARKING

Each culvert shall be clearly marked by waterproof paint. The following shall be shown on the inside of the vertical leg of the culvert section:

Culvert Section Span X Culvert Rise

Date of Manufacture

Name or trademark of the manufacturer

And in the case of headwall sections, east or west face shall also be marked

15. CONSTRUCTION REQUIREMENTS

15.1 Footings - the culverts shall be installed on either precast or cast-in-place concrete footings. The design size and elevation of the footers shall be as determined by the Engineer. A 75 mm deep keyway shall be formed in the top surface of the footing 75 mm clear of the outside faces of the culvert, unless specified otherwise on the plans. the footings shall be given a smooth float finish and shall reach a compressive strength of 14 MPa before placement of the culvert sections. The completed footing surface shall be constructed in accordance with grades shown on the plans. When tested with a 3000 mm straight edge, the surface shall not vary more than 6 mm in 3000 mm. If a precast concrete footer is used, the contractor shall prepare a 100 mm thick layer of compacted granular material the full width of the footer prior to placing the precast footer.

15.2 Placement of the Culverts - The culverts shall be placed as shown on the Engineer's plan drawings. Special care shall be taken in setting the culverts to the true line and grade. The culverts shall be set on 150 mm X 150 mm masonite or steel shims. A minimum of 13 mm gap shall be provided between the footing and the bottom of the culvert's vertical legs. The gap shall be filled with cement grout (portland cement and water or cement mortar composed of one part portland cement and three parts of sand, by volume, and water.

15.3 External Protection of Joints - The butt joint made by two adjoining culverts shall be covered with a 22 mm X 35 mm (32 mm round equivalent) piece of butyl rope and a minimum of 230 mm wide joint wrap. The surface shall be free of dirt before applying the joint material. A primer compatible with the joint wrap to be used shall be applied for a minimum width of 230 mm on each side of the joint. The external wrap shall be either EZ-WRAP RUBBER by PRESS-SEAL GASKET CORPORATION, SEAL WRAP by MAR MAC MANUFACTURING CO. INC. or approved equal. The joint shall be covered continuously from the bottom of the culvert leg, across the top of the arch and to the opposite culvert section leg. Any laps that result in the loint wrap shall be a minimum of 150 mm long with the overlap running downhill.

In addition to the joints between units, the joint between the end unit and the headwall shall be sealed. If using precast wingwalls, the joint between the end bridge unit and the wingwall shall be sealed with this type of wrap or at the discretion of the Engineer, filter fabric shall be substituted.

During the backfilling operation, care shall be taken to keep the joint wrap in its proper location over the joint.

15.4 Backfill - Backfill shall be considered as all replaced excavation and new embankment adjacent to the Con/Span or approved equal bridge units and wingwalls. The project construction and material specifications which include the specifications for excavation for structures and roadway excavation and embankment construction shall apply except as modified in this section.

Backfill material for a minimum width of 1220 mm on each side of the culvert, from the base of the unit to 300 mm above the outside corner shall be a soil meeting AASHTO classification A1, A2, A3 or A4 unless authorization to use a different materials given in writing by the designer. For heights of fill over 3660 mm, only A1 & A3 materials shall be used. Maximum dry density shall be determined by AASHTO T-99 or other approved methods. Backfill shall be placed and compacted in layers until the density is not less than 95% of maximum dry density. All material outside the backfill zone shall be good quality, well compacted embankment or in situ soil.

No backfill shall be placed against any structural elements until they have been approved by the Engineer.

Backfill against a waterproofed surface shall be placed carefully to avoid damage to the waterproofing material.

Mechanical tampers or approved compacting equipment shall be used to compact all backfill and embankment immediately adjacent to each side of the culvert and over the top of the culvert until it is covered to a minimum depth of 300 mm. The backfill within 1220 mm of each side of the culvert shall be placed in lifts of 200 mm or less (loose depth). Heavy compaction equipment shall not be operated in this area or over the culvert until it is covered to a depth of 300 mm.

Lightweight dozers and graders may be operated over culverts having one 300 mm of compacted cover, but heavy earth moving equipment (larger than a D-4 Dozer weighing in excess of 107 kN and having track pressures of 55 kPa or greater) shall require 600 mm of cover unless the design cover is less than 600 mm. In no case shall equipment operating in excess of the design load (MS18 or MS23) is to be permitted over the culvert unless approved by Con\Span or approved equal.

Any additional fill and subsequent excavation required to provide this minimum cover shall be made at no additional cost to the project.

As a precaution against introducing unbalanced stresses in the culvert and wingwalls, when placing backfill at no time shall the difference between the heights of fill on opposite sides of the culvert exceed 600 mm.

Backfill in front of wingwalls shall be carried to ground lines shown in the plans.

16. MEASUREMENT AND PAYMENT

The completed work as measured for Precast Culvert will be paid for at the contract unit price for the following contract item (pay item).

Pay Item	Pay Unit
12802 x 4267 precast concrete three - sided box Culvert	Meter

Payment for Precast Culvert shall be payment in full for labor, equipment and material necessary to design, manufacture and install the arch elements, including any steel shims needed to level the arch elements, casting holes in the elements as needed for guardrail posts, casting in the anchor assembly per STD. B-18-B, furnishing and placing the grout between the footing and the arch elements, precast headwall units, steel connection plates between units, and furnishing and placing the joint waterproofing.

METRIC

DIMENSIONS ARE IN MILLIMETERS UNLESS OTHERWISE SHOWN. ELEVATIONS, COORDINATES, CURVE AND ALIGNMENT DATA ARE IN METERS. STATIONS ARE IN KILOMETERS + METERS.

REVISIONS			
DSGN BY	C.D.P.	12-97
DR'N BY	R.J.D.	5-97
CK'D BY	R.G.W.	5-97
FINAL CK'D BY	M.D.W.	2-99
APP'D BY		

SEG
SNELL ENVIRONMENTAL GROUP, INC. A DLZ Company
151 W. CONGRESS, SUITE 328
DETROIT, MICHIGAN 48226
TELEPHONE (313) 961-4040
DETROIT Making it better for you

CITY OF DETROIT
MICHIGAN

RIVERSIDE AVE.
OVER CANAL
(BW-242)

PRECAST CULVERT
SPECIFICATIONS

SCALE NOT TO SCALE
PROJECT NO. 9641-5160-
SHEET NO. R7 OF 19

FILE NAME: 07note .DGN

h:\96415160.01\bridge\final\07note Feb. 2, 1999 14:25:56

BAR	DIMENSIONS a	b	c	d	e	f	g	h	j	k	m	NO. REQ'D	TOTAL MASS
A1601700	1700											236	623
A1605377	5377											56	467
A1607570	7570											56	658
											SUBTOTAL =		1748 kg
EA1301650	1650											88	144
EA1304435	4435											40	176
EA1313360	13360											12	159
ED1902018*	940	138	940									64	289
											EPOXY SUBTOTAL =		768 kg

* SHALL BE CAST IN PRECAST CULVERT HEADWALL.

REINFORCEMENT SHALL BE BUNDLED AND TAGGED AS TO THE LOCATION AS SHOWN ON THIS SHEET.

ALL BENDS IN REINFORCING STEEL TO BE MADE ABOUT A PIN OF THE MINIMUM DIAMETER ALLOWED BY THE STANDARD SPECIFICATIONS.

TOLERANCES IN CUTTING AND BENDING BARS ARE AS ESTABLISHED IN THE MANUAL OF STANDARD PRACTICE OF THE CONCRETE REINFORCING STEEL INSTITUTE AND DETAILING MANUAL OF THE AMERICAN CONCRETE INSTITUTE.

WHERE FIELD CUTTING OF EPOXY BARS IS REQUIRED, THE CONTRACTOR SHALL REPAIR THE EPOXY COATING AT THE CUT END AS PROVIDED FOR IN STANDARD SPECIFICATION 706.03.E.8.

EPOXY COATED
BAR SIZE
BAR LENGTH (mm)
EA2013000
BAR SHAPE

BAR LEGEND

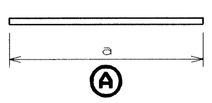

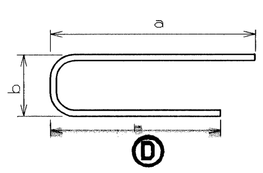

SUMMARY OF QUANTITIES

ITEM NO.	ITEM DESCRIPTION	UNIT	QUANTITY
1500000	MOBILIZATION, MAX.	Lsum	1
2020002	TREE, REMOVE, 451 TO 900 mm	ea	1
2040005	CURB, REMOVE	m	46
2040020	STRUCTURES, REMOVE	Lsum	1
2050010	EMBANKMENT, CIP	m3	110
2060002	BACKFILL, STRUCTURE, CIP	m3	400
2060011	EXCAVATION, FOUNDATION	m3	500
2080025	EROSION CONTROL, SILT FENCE	m	210
3010002	SUBBASE, CIP	m3	42
3020010	AGGREGATE BASE, 100 mm	m2	556
3050001	BITUMINOUS BASE CRUSHING AND SHAPING	m2	345
4017102	12 802 X 4267 PRECAST CONC THREE-SIDED BOX CULVERT	m	13
4040030	UNDERDRAIN, FOUNDATION, 100 mm	m	55
4040110	UNDERDRAIN, OUTLET ENDING, 100 mm	ea	2
6020206	CONCRETE PAVEMENT WITH INTEGRAL CURB (TYPE IIIR), REINFORCED 240 mm	m2	573
7040003	STEEL SHEET PILING, TEMP., LEFT IN PLACE	m2	409
7060002	CONCRETE, GRADE T	m3	92
7060007	CONCRETE, GRADE D	m3	10
7060020	SUBSTRUCTURE CONCRETE	m3	107
7060030	REINFORCEMENT, STEEL	kg	1748
7060031	REINFORCEMENT, STEEL, EPOXY COATED	kg	768
7060040	CONCRETE, LOW TEMPERATURE PROTECTION	m3	117
7060250	STRUCTURE NAME PLATE	ea	2
7110004	BRIDGE RAILING, SOLID PARAPET TYPE	m	27
7110007	BRIDGE RAILING, ONE TUBE	m	27
8030002	SIDEWALK, CONCRETE, 100 mm	m2	33
8120036	BARRICADE, TYPE III, LIGHTED, FURN.	ea	4
8120037	BARRICADE, TYPE III, LIGHTED, OPER.	ea	3
8120041	CONCRETE BARRIER, TEMPORARY, FURNISHED	m	30.5
8120042	CONCRETE BARRIER, TEMPORARY, OPERATED	m	30.5
8120060	SIGN, TYPE B TEMPORARY, PRISMATIC RETRFLEC SHEETING	m2	1
8130015	RIPRAP, HEAVY	m2	66
8160003	WATER	kL	5
8160007	SEEDING, MIXTURE TUF	kg	4
8160020	FERTILIZER, CHEMICAL NUTRIENT, CLASS A	kg	5
8160072	MULCH ANCHORING	m2	160
8160077	MULCH BLANKET	m2	160

METRIC

DIMENSIONS ARE IN MILLIMETERS UNLESS OTHERWISE SHOWN. ELEVATIONS, COORDINATES, CURVE AND ALIGNMENT DATA ARE IN METERS. STATIONS ARE IN KILOMETERS + METERS.

REVISIONS			
DSGN BY	CDP	12-97
DR'N BY	RJD	5-97
CK'D BY	RGW	5-97
FINAL CK'D BY	MDW	2-99
APP'D BY		

SEG
SNELL ENVIRONMENTAL GROUP, INC. A DLZ Company
151 W. CONGRESS, SUITE 328
DETROIT, MICHIGAN 48226
TELEPHONE (313) 961-4040

DETROIT Making it better for you

CITY OF DETROIT
MICHIGAN

RIVERSIDE AVE.
OVER CANAL
(BW-242)

STEEL REINFORCEMENT
AND
QUANTITIES

SCALE NOT TO SCALE
PROJECT NO. 9641-5160-01
SHEET NO. R8 OF 19

FILE NAME: 08BAR01.DGN

h:\96415160.01\bridge\final\08bar0 Feb. 2, 1999 16:36:16