CITY OF DETROIT

COLEMAN A. YOUNG — MAYOR

CITY ENGINEERING DEPARTMENT

PLANS FOR PROPOSED BRIDGE REPAIRS

FOR

DEPARTMENT OF PUBLIC WORKS

WOODSIDE OVER CANAL (BELLE ISLE) BW-216

RIDGE ROAD OVER ROUGE RIVER BW-283

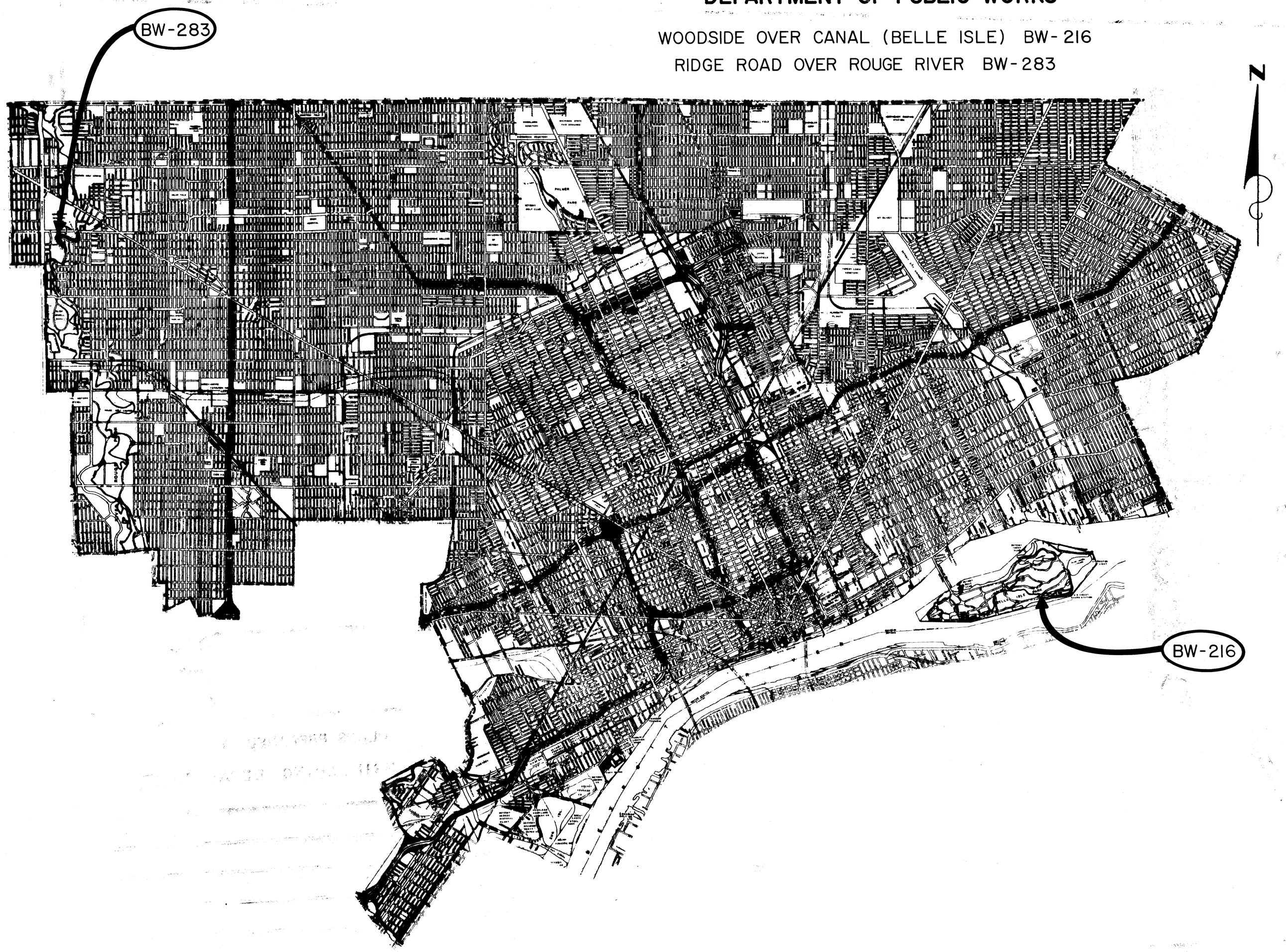

INDEX OF SHEETS

SHEET NO.	DESCRIPTION
1.	TITLE SHEET
2.	BRIDGE REPAIR PLAN (BW-216)
3.	BRIDGE REPAIR DETAILS (BW-216)
4.	RAILING REPLACEMENT (BW-283)
5.	GUARDRAIL REPLACEMENT (BW-283)

PROJECT: BRIDGE REPAIRS FOR WOODSIDE OVER CANAL (BELLE ISLE) AND RIDGE ROAD OVER ROUGE RIVER.

CONTRACT NO. PW-6751

PLANS PREPARED BY

CITY ENGINEERING DEPARTMENT

RECOMMENDED FOR APPROVAL	ENGINEER OF INSPECTION	4-21-87 DATE
RECOMMENDED FOR APPROVAL	STRUCTURAL ENGINEER	4-21-87 DATE
APPROVED	HEAD ENGINEER	4-21-87 DATE
APPROVED	DIRECTOR	4-21-87 DATE

DATE 10/31/86

DRWG. NO. 1 of 5

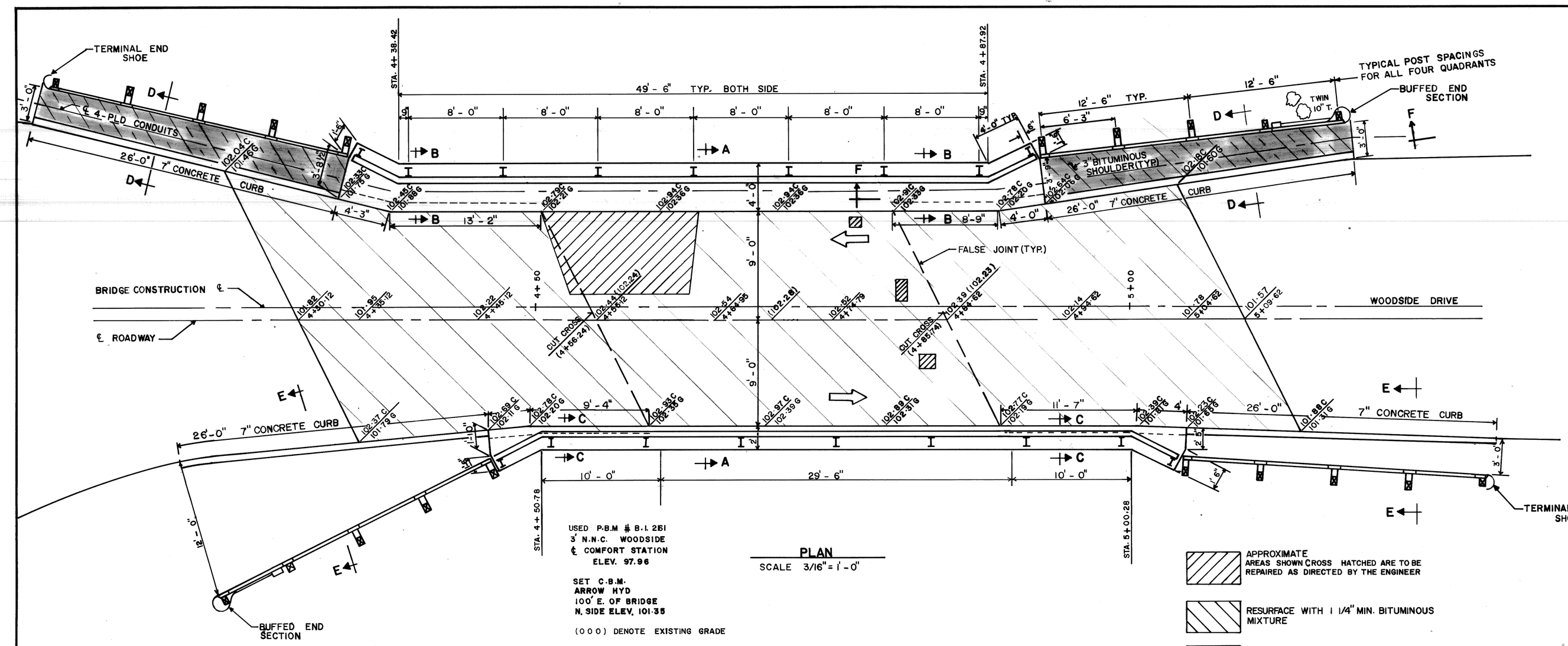

PLAN
SCALE 3/16" = 1'-0"

APPROXIMATE AREAS SHOWN CROSS HATCHED ARE TO BE REPAIRED AS DIRECTED BY THE ENGINEER

RESURFACE WITH 1 1/4" MIN. BITUMINOUS MIXTURE

3" MIN. BITUMINOUS SHOULDER

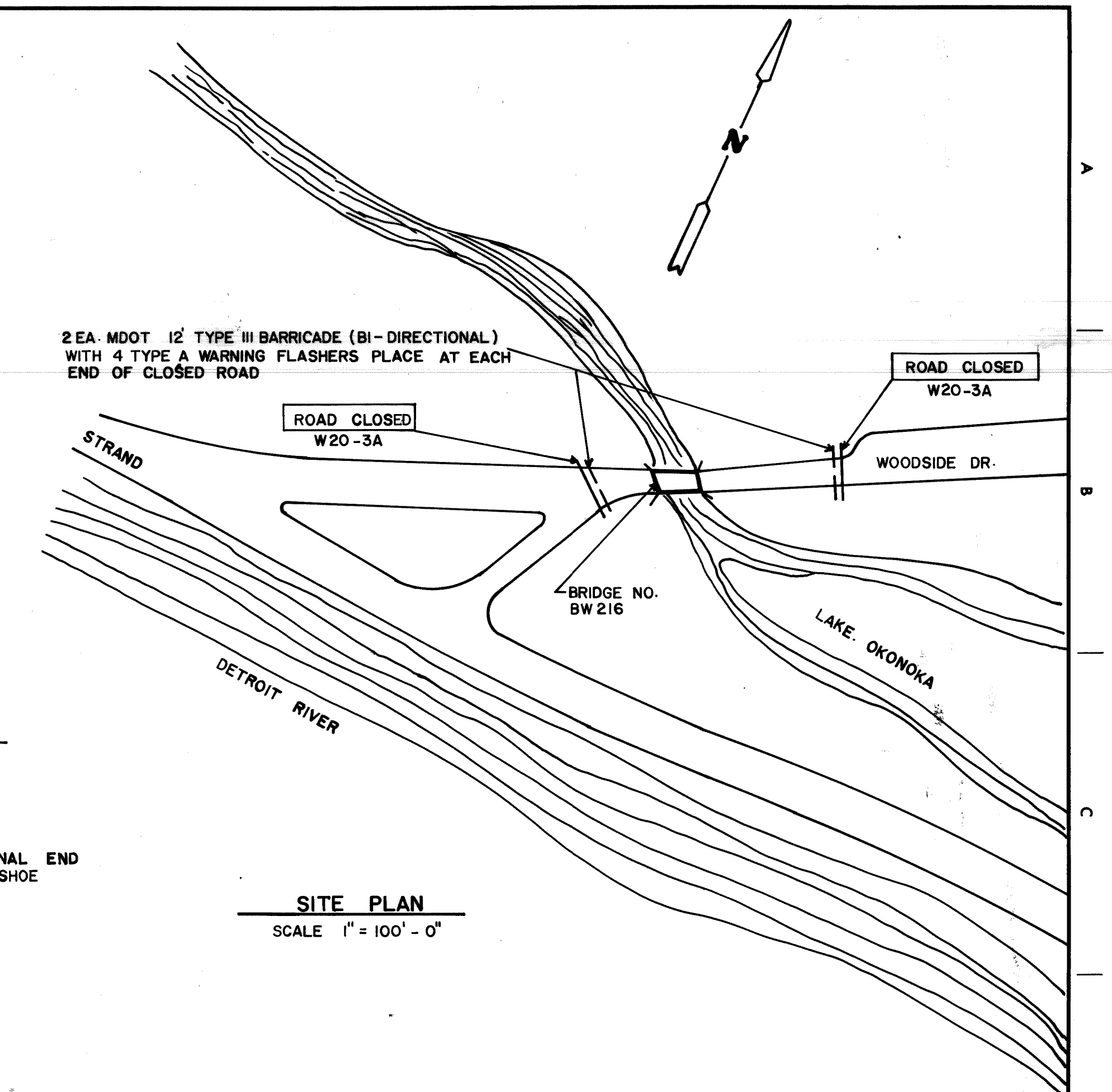

SITE PLAN
SCALE 1" = 100'-0"

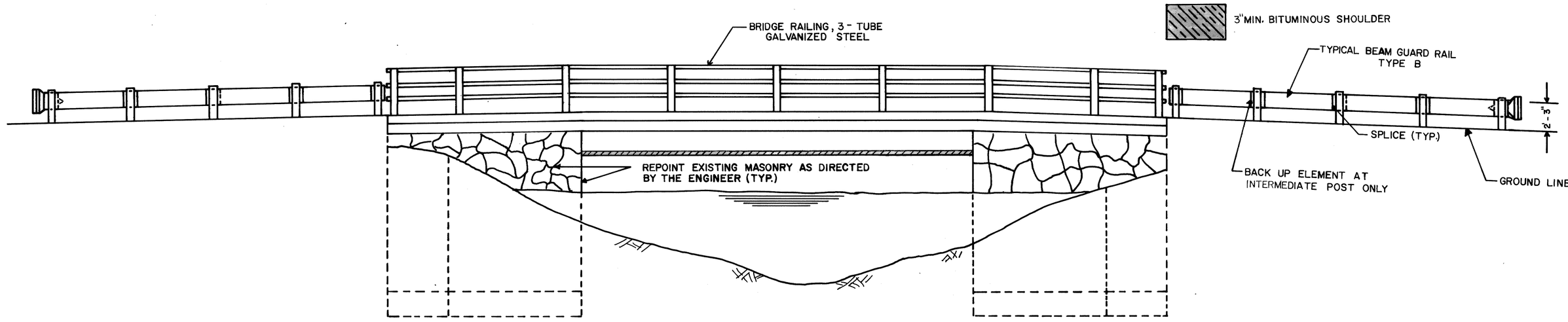

ELEVATION
SCALE 3/16" = 1'-0"

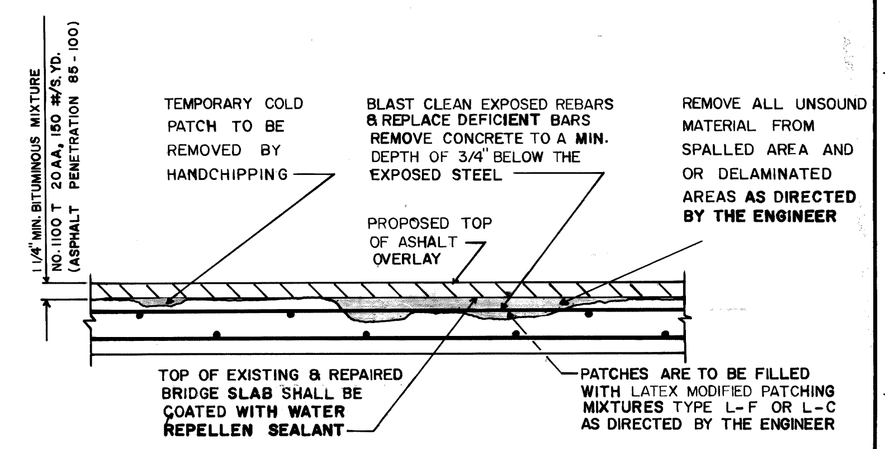

PARTIAL DECK RESURFACING SECTION

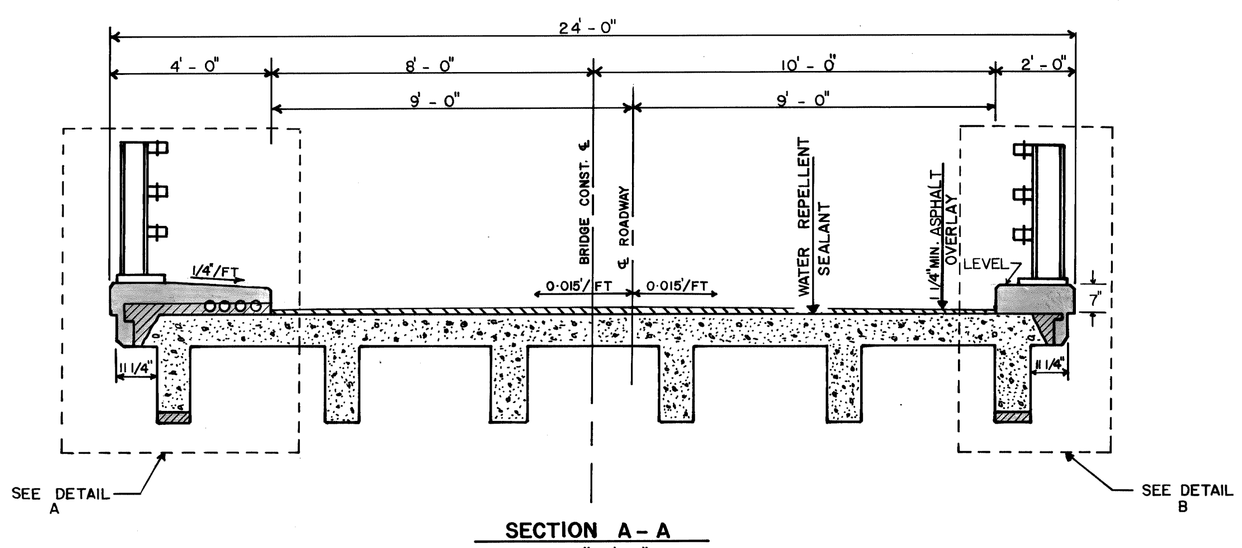

SECTION A-A
SCALE 3/8" = 1'-0"

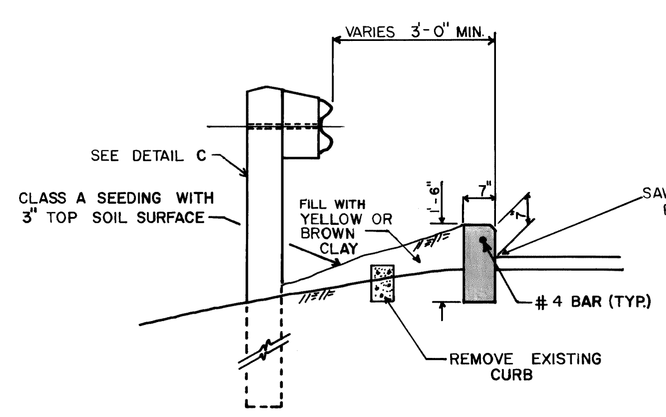

SECTION E-E
SCALE 1/2" = 1'-0"

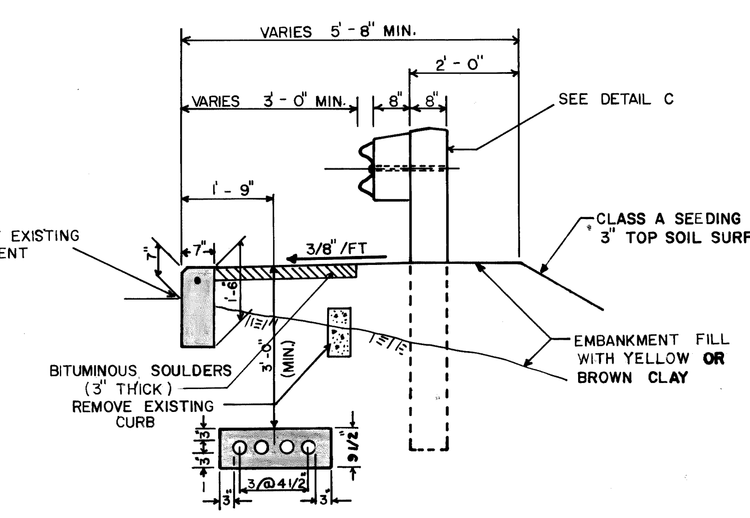

SECTION D-D
SCALE 1/2" = 1'-0"

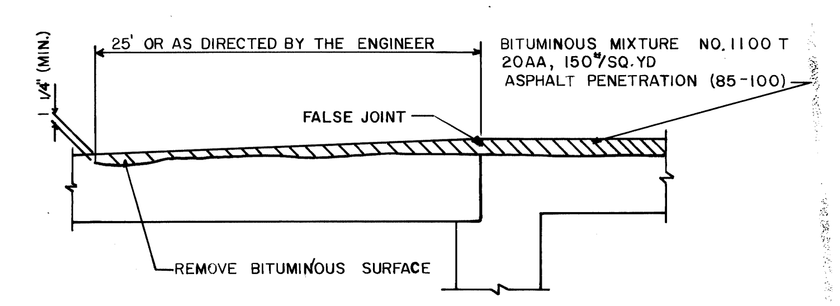

APPROACH WEDGE DETAIL

COOR'D	DESCRIPTION	DR'N	CK'D	AP'VD	DATE
REVISIONS LOCATED BY COORDINATES ON SHEET					

REFERENCE DRAWINGS

DESIGNED BY	H. DICKOW
DRAWN BY	H. DICKOW
TRACED BY	
CHECKED BY	M. CHAN

APPROVED:
STRUCTURAL ENGINEER
HEAD ENGINEER

CITY OF DETROIT
CITY ENGINEERING DEPARTMENT
FOR
DEPARTMENT OF PUBLIC WORKS

WOODSIDE BRIDGE OVER CANEL (BW-216)

BRIDGE REPAIR PLAN

SHEET 2 OF 5 SHEETS
CONTRACT NO. PW-6751
ASSIGNMENT NO.
DATE 10-31-86

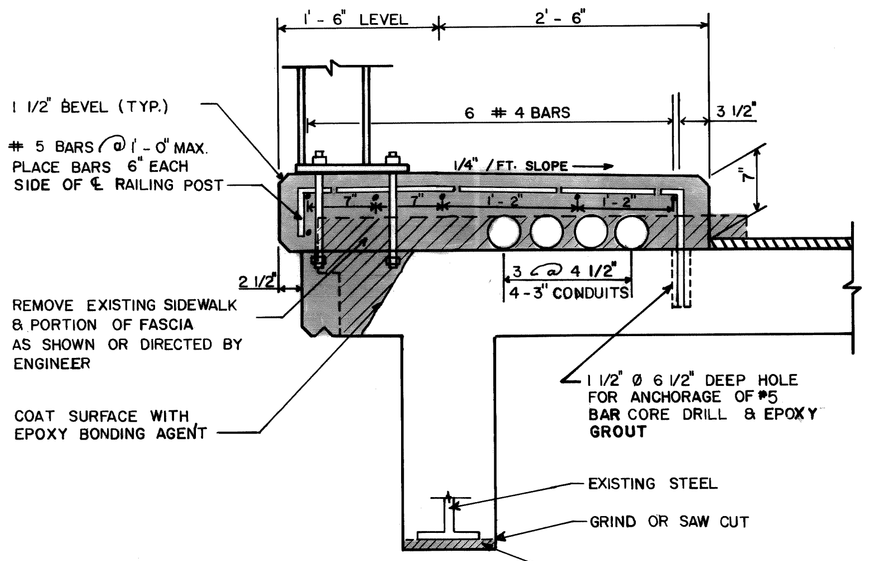

DETAIL - A -
SCALE 1" = 1'-0"

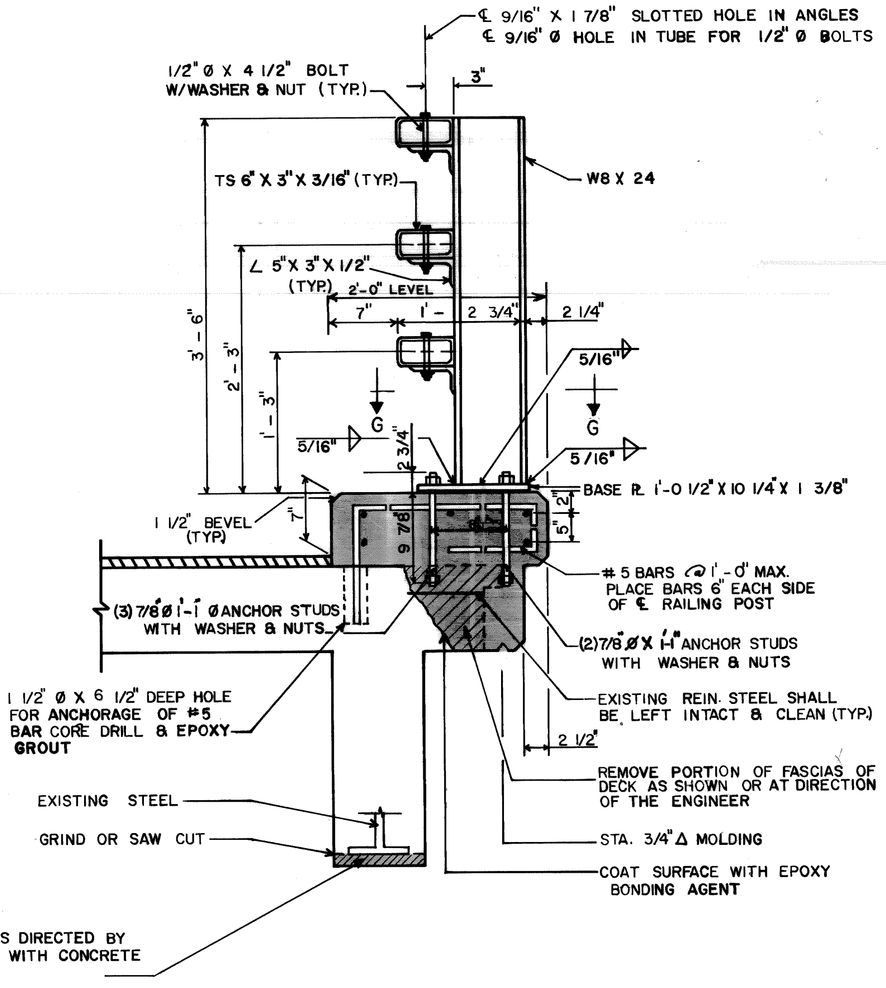

DETAIL - B -
SCALE 1" = 1'-0"

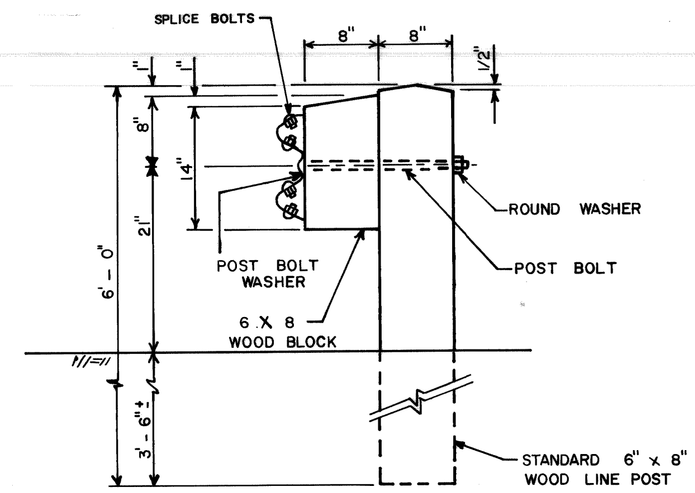

DETAIL - C -
SCALE 1" = 1'-0"

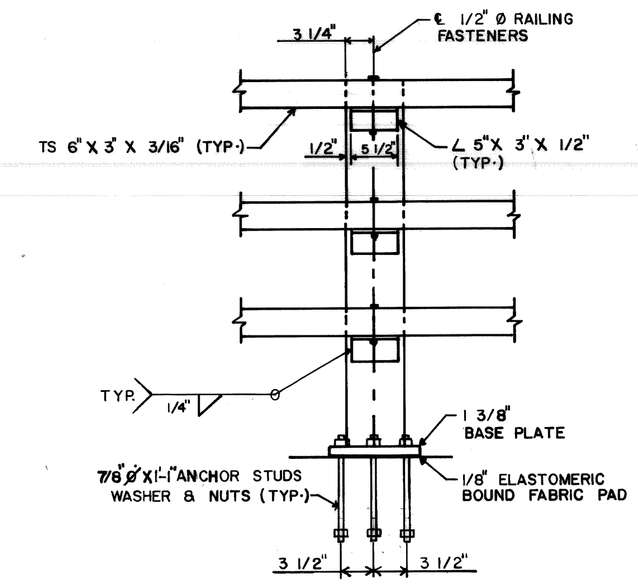

POST - INSIDE ELEVATION
SCALE 1" = 1'-0"

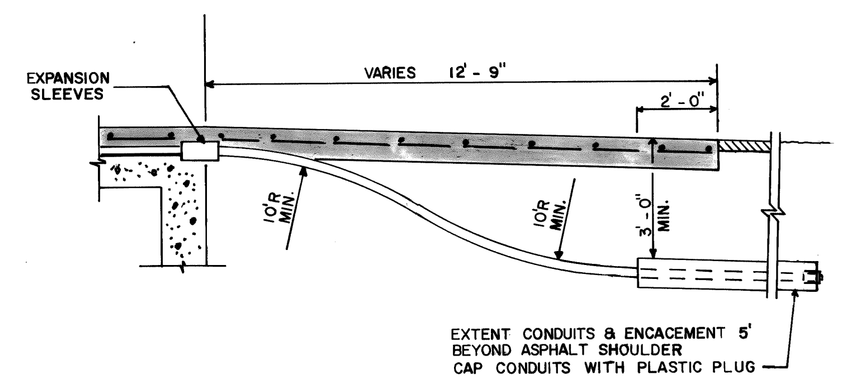

SECTION F - F
SCALE 3/8" = 1'-0"

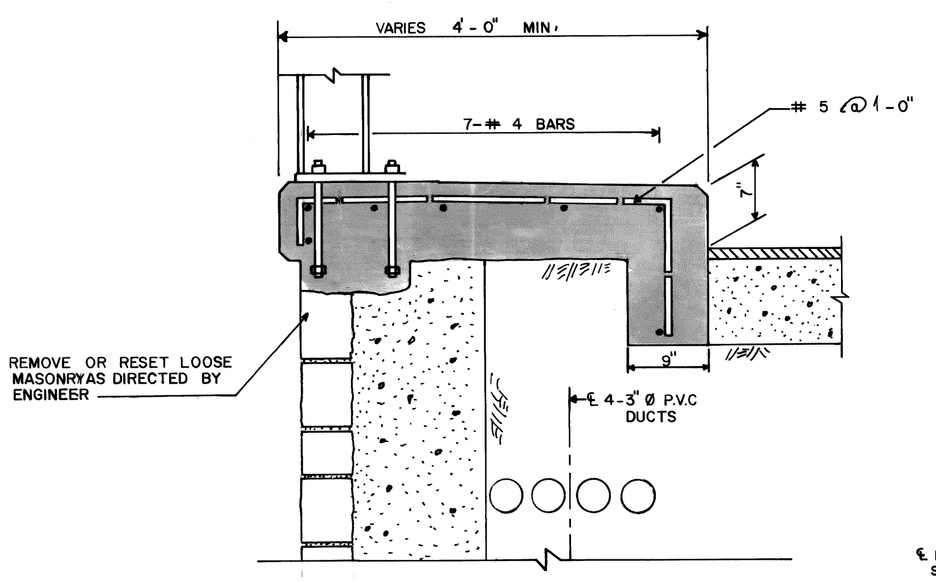

SECTION B-B
SCALE 1" = 1'-0"

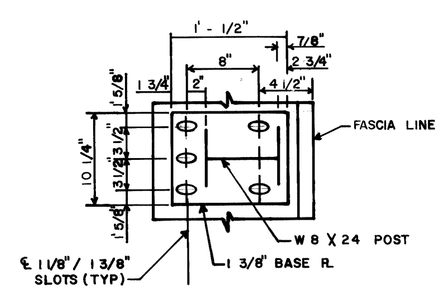

SECTION G - G
SCALE 1" = 1'-0"

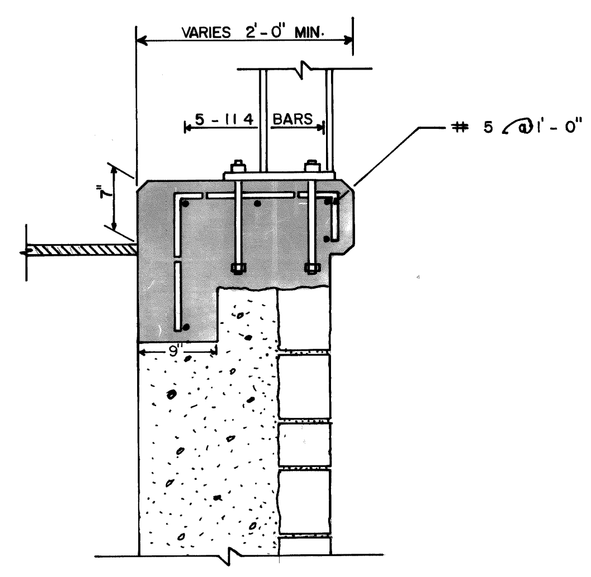

SECTION C - C
SCALE 1" = 1'-0"

GENERAL NOTES

- EXCEPT WHERE OTHERWISE INDICATED ON THESE PLANS OR IN THE PROPOSALS AND SUPPLEMENTAL SPECIFICATIONS CONTAINED THEREIN, ALL WORKMANSHIP AND MATERIALS SHALL BE IN ACCORDANCE WITH MICHIGAN DEPARTMENT OF TRANSPORTATION STANDARD SPECIFICATIONS FOR CONSTRUCTION, 1984 EDITION.
  CONCRETE GRADE 45D $F_c' = 4{,}000$ PSI
  STEEL REINFORCEMENT (EPOXY COATED) $F_y = 60{,}000$ PSI
- FOR BEAM GUARD RAIL TYPE B AND BRIDGE RAILING NOTES AND DETAILS (SEE SPECIFICATIONS)
- THE CONTRACTOR SHALL FURNISH INSTALL AND MAINTAIN ALL NECESSARY TRAFFIC CONTROL DEVICES AS SPECIFIED UNDER "TRAFFIC MAINTANCE AND CONTROL", SECTION 6.31 OF M.D.O.T STANDARD SPECIFICATION
- BITUMINOUS FALSE JOINTS SHALL BE PAVED OVER AS IT THEY DID NOT EXIST. THEY SHOULD THEN BE SAW CUT TO CUT TO A DEPTH OF 1 1/2". ROUND BUTYL RUBBER BACK UP ROD SHALL BE INSERTED AND THE TOP 1/2" FILLED WITH ALLIED PRODUCTS # 9005, HOT POURED SEALANT, OR APPROVED EQUAL
- APPLY PENETRATING CONCRETE SEALER TO SIDE WALK, BRUSH BLOCK AND CURB FACE (SEE SPECIFICATIONS)
- PROVIDE EXPANSION SLEEVES FOR 3" SCHEDULE 80 P.V.C CONDUIT AT ABUTMENTS
- METHOD OF DRILLING SHALL BE WITH HIGH SPEED ROTARY DRILL APPROVED BY THE ENGINEER
- BLAST CLEAN EXPOSED REBARS. THOSE BARS THAT HAVE LOST 1/4" OR MORE OF THEIR ORIGINAL DIAMETER SHALL BE SUPPLEMENTED BY SPLICING IN NEW BARS.
- WATER REPELLENT SEALANT SHALL BE "HYDROZO CLEAR 56" MANUFACTURED BY HYDROZO COATINGS CO. OR APPROVED EQUAL, APPLICATION METHOD SHALL BE IN ACCORDANCE WITH THE MANUFACTUR RECOMMENDATION.

COORD	DESCRIPTION	DR'N	CK'D	APV'D	DATE
REVISIONS LOCATED BY COORDINATES ON SHEET					

REFERENCE DRAWINGS

DESIGNED BY	H. DICKOW
DRAWN BY	H. DICKOW
TRACED BY	
CHECKED BY	M. CHAN

APPROVED:
STRUCTURAL ENGINEER
HEAD ENGINEER

CITY OF DETROIT
CITY ENGINEERING DEPARTMENT
FOR
DEPARTMENT OF PUBLIC WORKS

WOODSIDE BRIDGE OVER CANEL (BW - 216)
BRIDGE REPAIR DETAILS

SHEET 3 OF 5 SHEETS
CONTRACT NO. PW-6751
ASSIGNMENT NO.
DATE 10-31-86

DUNN 250 6-83 66269F

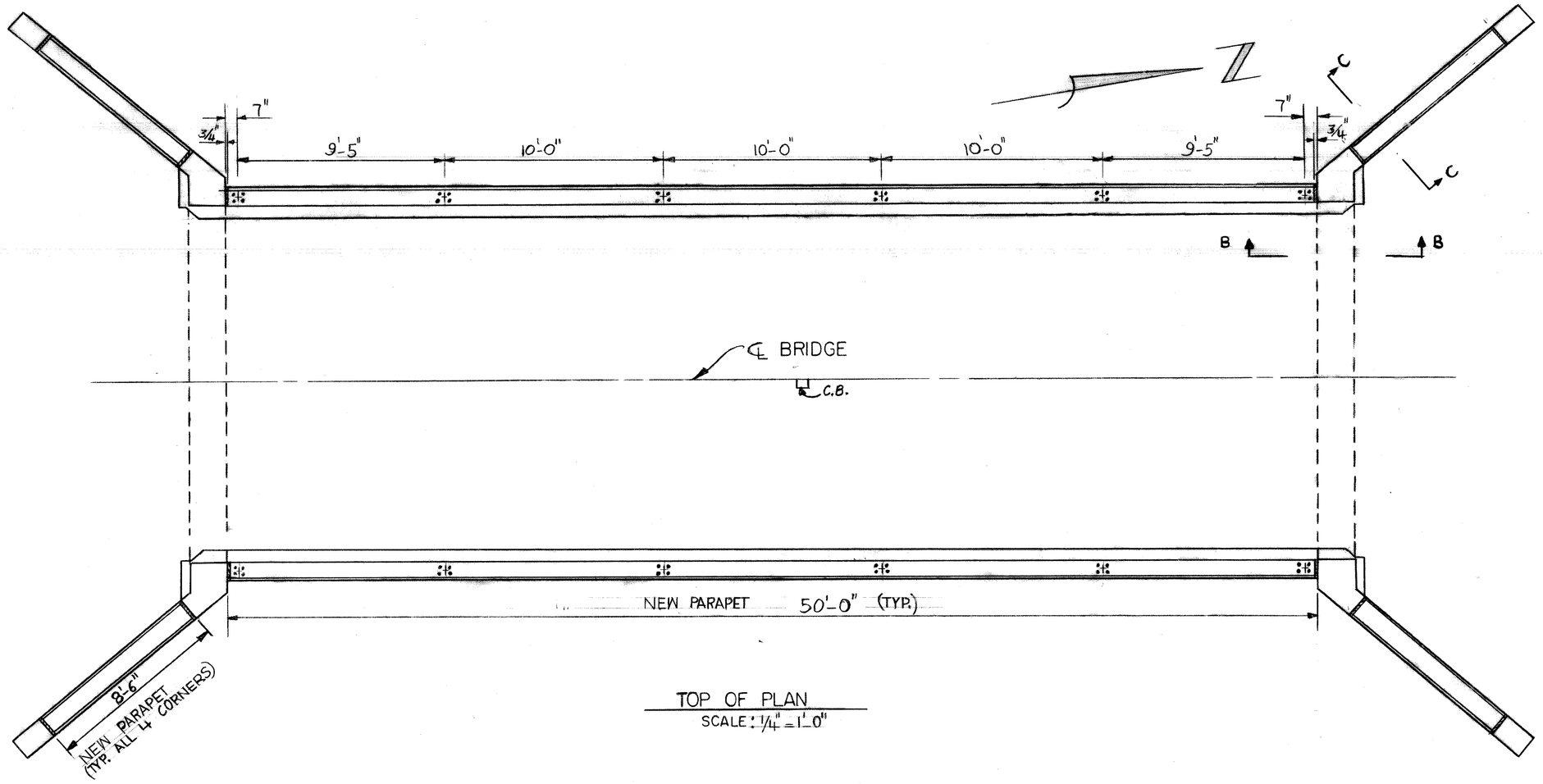

TOP OF PLAN
SCALE: 1/4" = 1'-0"

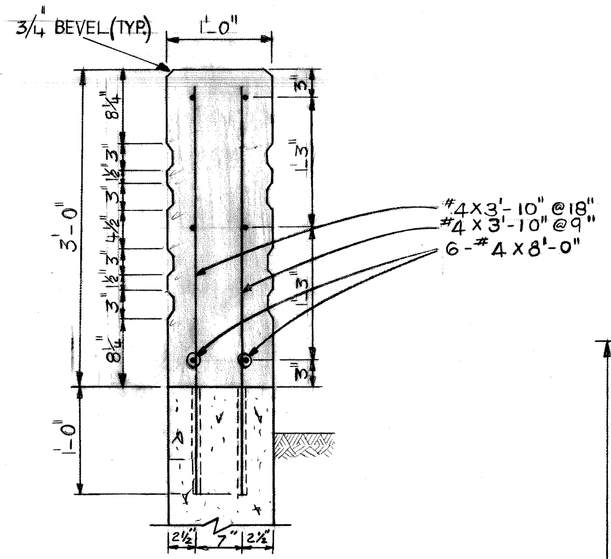

SECTION C-C (TYP)
SCALE: 1" = 1'-0"

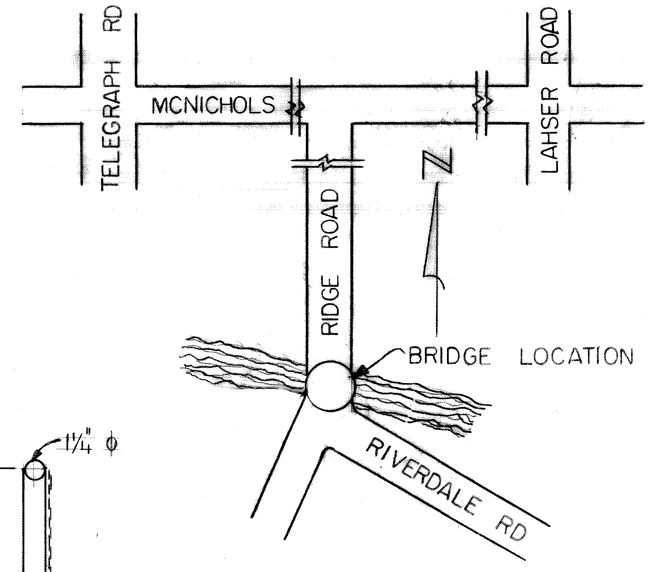

LOCATION PLAN

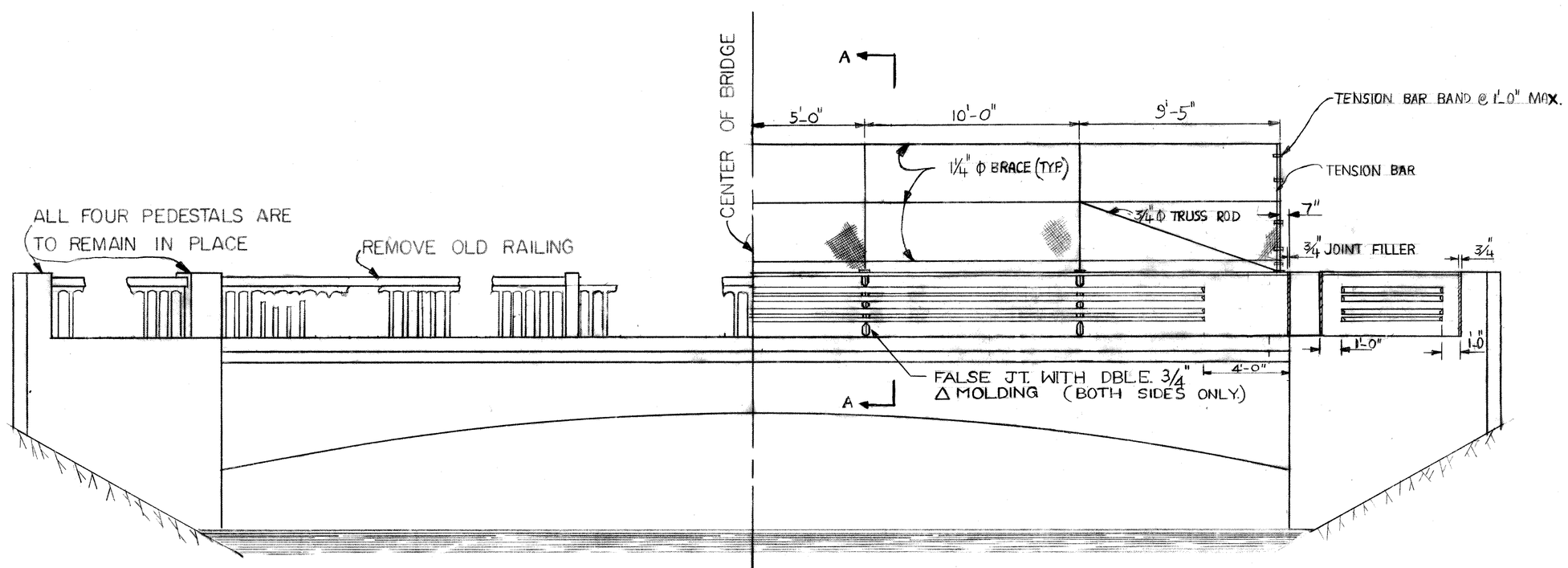

EXISTING HALF ELEVATION
SCALE: 1/4" = 1'-0"

PROPOSED HALF ELEVATION
SCALE: 1/4" = 1'-0"

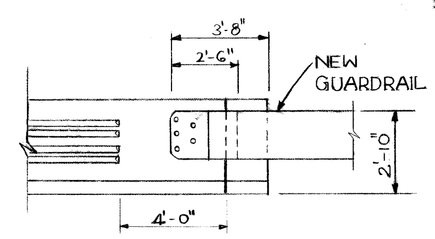

SECTION B-B. (TYP.)
SCALE: 1/4" = 1'-0"

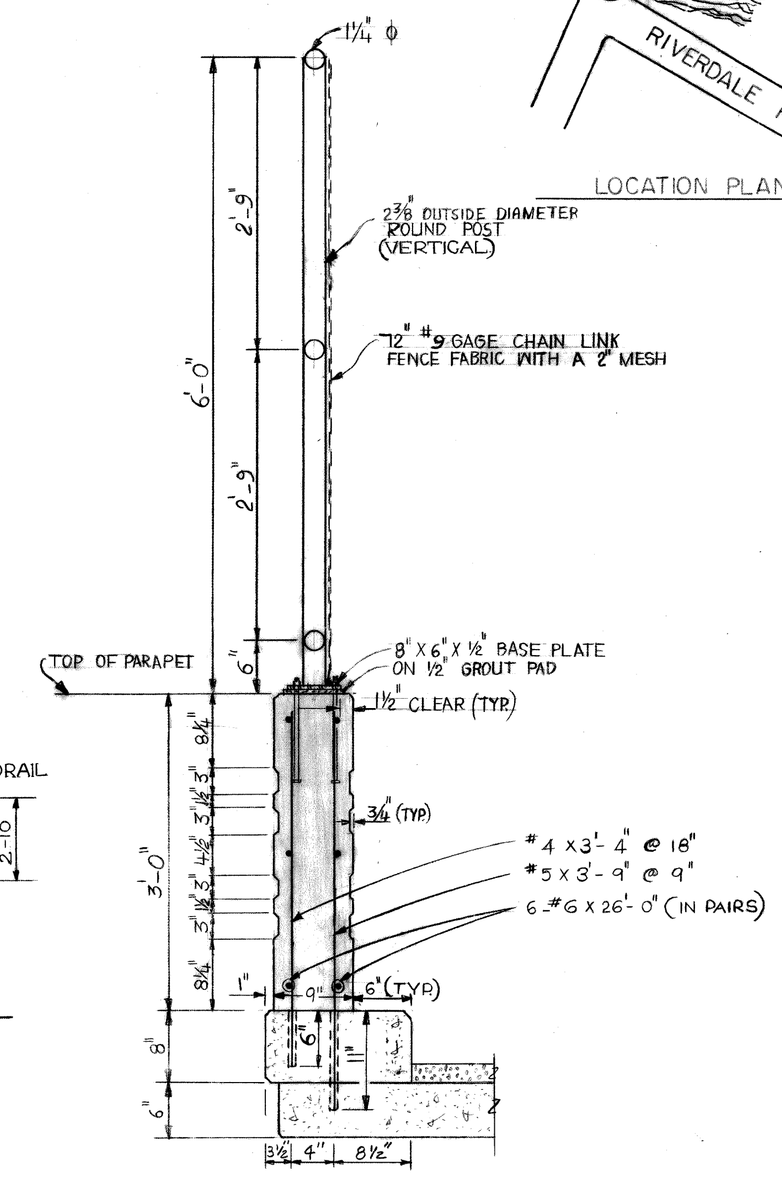

SECTION A-A (TYP.)
SCALE: 1" = 1'-0"

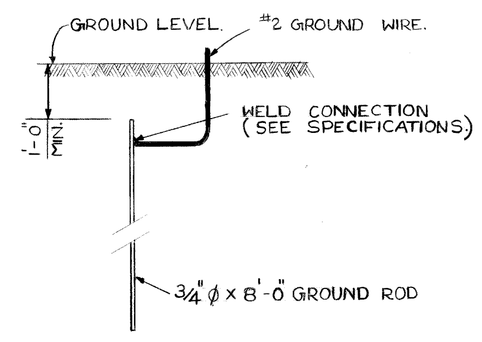

GROUNDING DETAIL

PARAPET AND FENCING NOTES

ALL WORK SHALL CONFORM TO MICHIGAN DEPARTMENT OF TRANSPORTATION STANDARD SPECIFICATIONS FOR HIGHWAY CONSTRUCTION, 1984 EDITION.

ALL FENCE FABRIC SHALL BE GALVANIZED, #9 GAGE WITH A 2" MESH, AND FURNISHED WITH KNUCKLING AT BOTH SELVAGES.

THE POSTS SHALL BE ROUND POSTS HAVING AN OUTSIDE DIAMETER OF 2 3/8" AND WEIGHT 3.65 P.L.F., GALVANIZED.

THE NOMINAL 1 1/4" ϕ PIPE SHALL BE 1 5/8" ϕ OUTSIDE DIAMETER STEEL PIPE OR TUBING WEIGHING 2.27 P.L.F., GALVANIZED.

ALL POSTS AND TUBING SHALL BE FURNISHED WITH MANUFACTURERS STANDARD CONNECTIONS AND ITS MINIMUM WEIGHT SHALL BE WITHIN 5% OF THAT SPECIFIED.

ALL COMPONENTS ARE TO BE GALVANIZED. BOLTS, NUTS AND WASHERS ARE TO BE GALVANIZED IN ACCORDANCE WITH ASTM DESIGNATION A153.

TENSION BAR SHALL BE 3/4" x 1/4" GALVANIZED STEEL.

CONTRACTOR SHALL VERIFY FIELD CONDITIONS BEFORE FABRICATION.

DRILLED HOLES MUST BE TWICE THE BAR DIAMETER AND THEN THE BARS SHALL BE SET IN EPOXY GROUT.

NEW PARAPET CONCRETE SHALL BE GRADE 45D. ALL STEEL REINFORCEMENT MUST BE EPOXY COATED BAR. GRADE 60

ALL EXPOSED NUTS SHALL BE PROTECTED FROM VANDALISM BY PEENING, SCORING, UPSETTING THE BOLT THREADS, OR OTHER ACCEPTABLE MEANS.

PROVIDE AN ELECTRICAL GROUNDING SYSTEM FOR EACH FENCE AS INDICATED IN THE DETAILED SPECIFICATIONS.

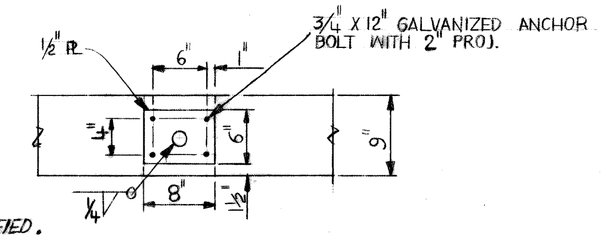

BASE PLATE DETAIL
SCALE: 1" = 1'-0"

revisions	dr'n	ck'd	ap'vd	date

designed by N.H.
drawn by N.H./J.Y.
checked by M.C.
approved:
STRUCTURAL ENGINEER.
HEAD ENGINEER

CITY OF DETROIT
city engineering department
for DEPARTMENT OF PUBLIC WORKS

RIDGE ROAD BRIDGE OVER ROUGE RIVER BW-283

CONCRETE RAILING REPLACEMENT

a.o.
contract no. PW-6751
sheet 4 of 5
drawing no.
date 10-31-86

DUNN 250 6-83 6626F

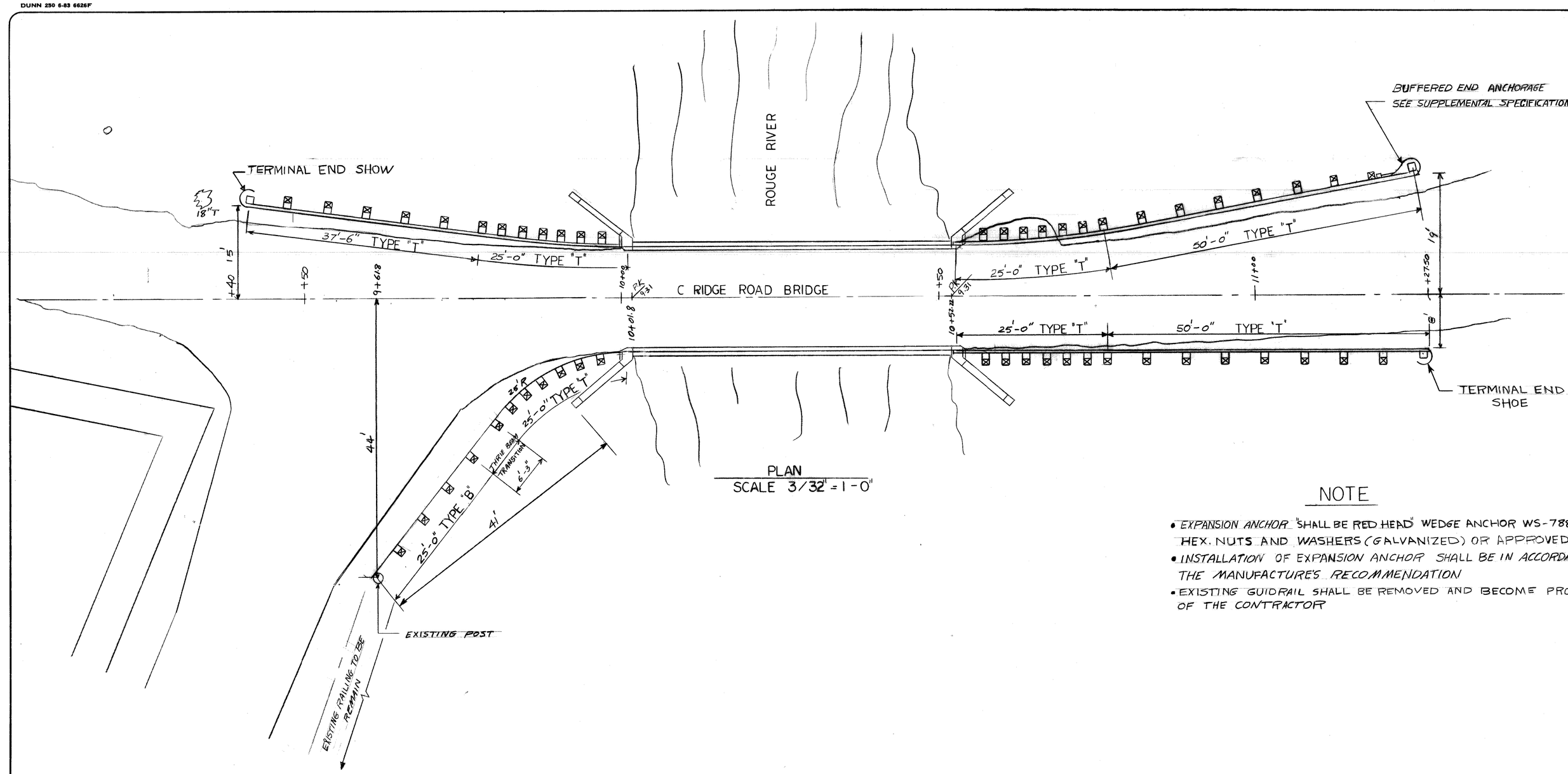

PLAN
SCALE 3/32" = 1'-0"

NOTE

- EXPANSION ANCHOR SHALL BE RED HEAD WEDGE ANCHOR WS-7880 G WITH HEX. NUTS AND WASHERS (GALVANIZED) OR APPROVED EQUAL
- INSTALLATION OF EXPANSION ANCHOR SHALL BE IN ACCORDANCE WITH THE MANUFACTURE'S RECOMMENDATION
- EXISTING GUIDRAIL SHALL BE REMOVED AND BECOME PROPERTY OF THE CONTRACTOR

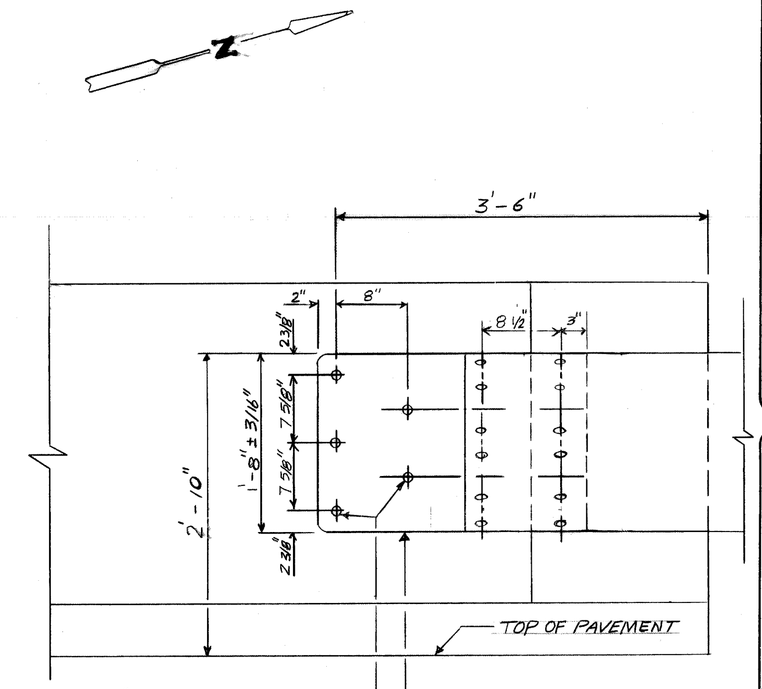

DETAIL -A-
SCALE 1" = 1'-0"

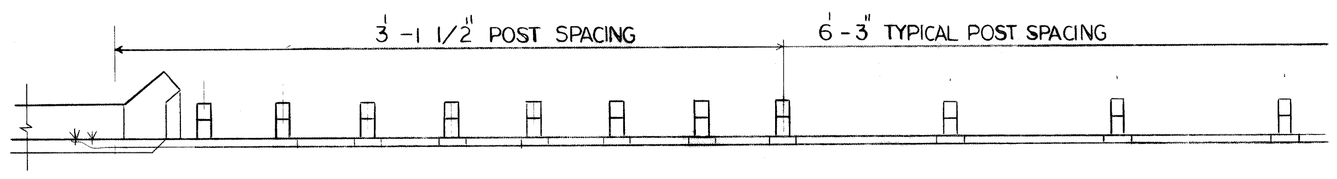

PLAN VIEW
SCALE 1/4" = 1'-0"

(N.W. CORNER SHOWN, OTHER SIMILAR)

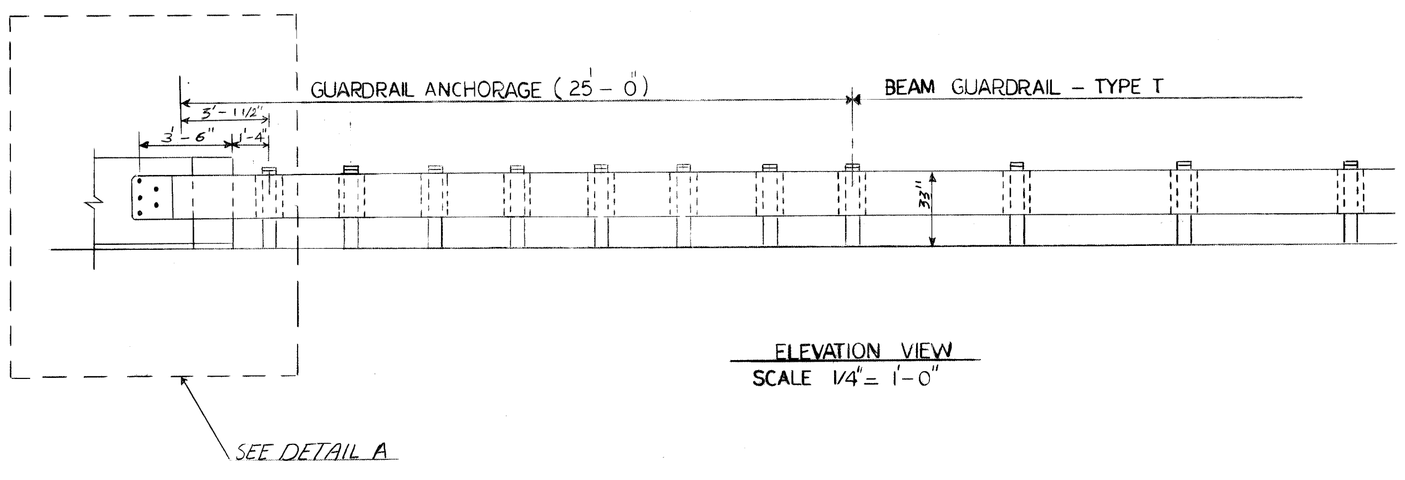

ELEVATION VIEW
SCALE 1/4" = 1'-0"

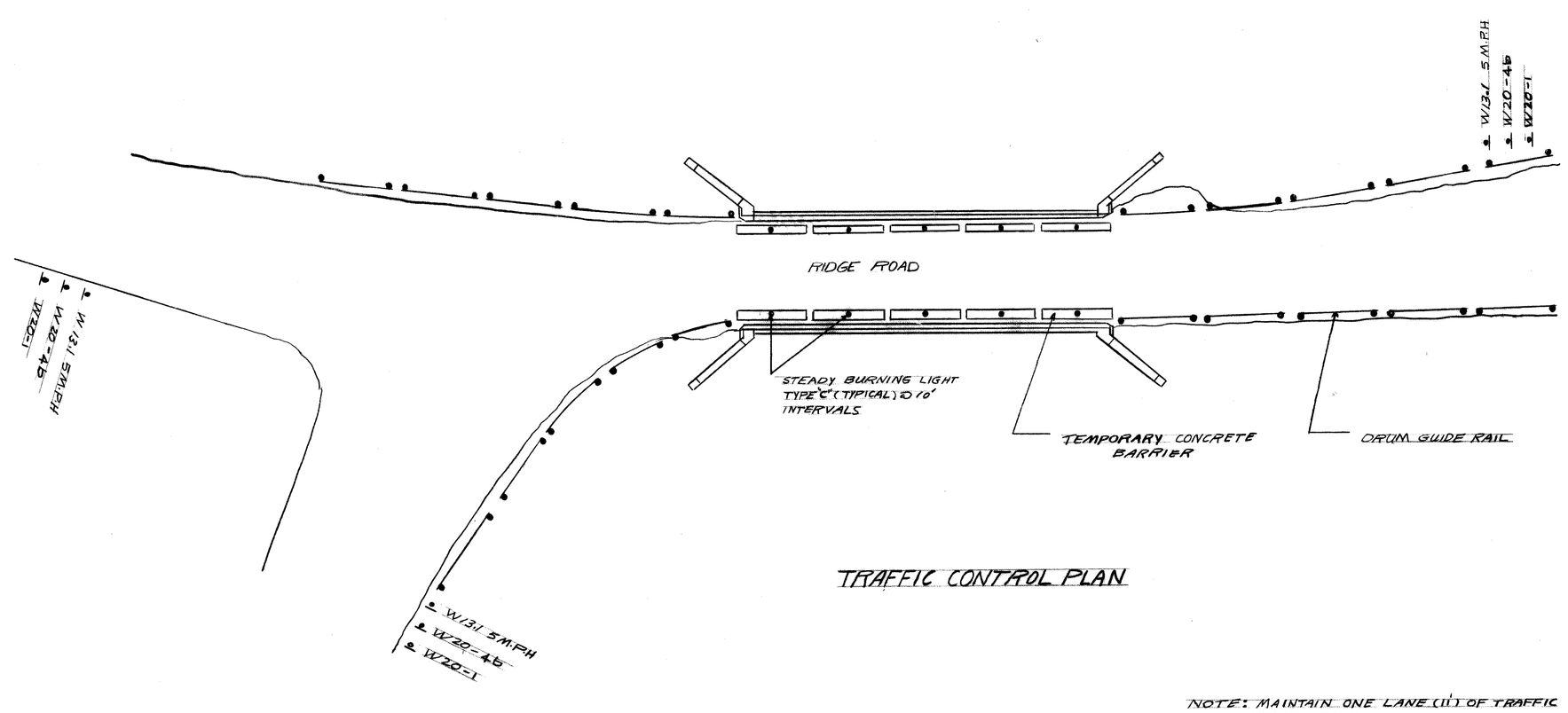

TRAFFIC CONTROL PLAN

NOTE: MAINTAIN ONE LANE (11') OF TRAFFIC AT ALL TIMES
REVERSE PROCEDURE FOR OPP. SIDE

TRAFFIC DEVICE KEY

W13-1 SPEED LIMIT 5 M.P.H
W20-4b WATCH FOR ONCOMING TRAFFIC
W20-1 CONSTRUCTION AHEAD

revisions	dr'n	ck'd	ap'vd	date
1				
2				
3				
4				
5				
6				

designed by H. DICKOW
drawn by H. DICKOW
checked by M. CHAN
approved:
STRUCTURAL ENGINEER
HEAD ENGINEER

CITY OF DETROIT
city engineering department
for DEPARTMENT OF PUBLIC WORKS

RIDGE ROAD BRIDGE OVER ROUGE RIVER
BW-283

GUARDRAIL REPLACEMENT

a.o.
contract no. PW-6751
sheet 5 of 5
drawing no.
date 10-31-86